PLUS 95S - MODEL 355CAV, SERIES A
DIRECT-VENT, 4-WAY MULTIPOISE
CONDENSING GAS FURNACE
WITH PERFECT SENSE™ PERFECT HUMIDITY™

bryant®

Installation Instructions

Visit www.Bryant.com

NOTE: Read the entire instruction manual before starting the installation.

Please retain these instructions with the furnace after installation for future reference.

NOTE: This furnace can be installed as a **(2-pipe) direct vent** condensing gas furnace.

Special Venting Requirements for Installations in Canada

Installation in Canada must conform to the requirements of CSA B149 code. Vent systems **must** be composed of pipe, fittings, cements, and primers listed to ULC S636. The special vent fittings and accessory concentric vent termination kits and accessory external drain trap have been certified to ULC S636 for use with those IPEX PVC vent components which have been certified to this standard. In Canada, the primer and cement must be of the same manufacturer as the vent system - IPEX System 636, PVC/CPVC Primer, Purple Violet for Flue Gas Venting and IPEX System 636(1)™, PVC Cement for Flue Gas Venting, rated Class IIA, 65 deg C. must be used with this venting system - do not mix primers and cements from one manufacturer with a vent system from a different manufacturer. Follow the manufacturer's instructions in the use of primer and cement and never use primer or cement beyond its expiration date.

The safe operation, as defined by ULC S636, of the vent system is based on following these installation instructions, the vent system manufacturer's installation instructions, and proper use of primer and cement. All fire stop and roof flashing used with this system must be UL listed material. Acceptability under Canadian standard CSA B149 is dependent upon full compliance with all installation instructions. Under this standard, it is recommended that the vent system be checked once a year by qualified service personnel.

The authority having jurisdiction (gas inspection authority, municipal building department, fire department, etc) should be consulted before installation to determine the need to obtain a permit.

Consignes spéciales pour l'installation de ventillation au Canada

L'installation faite au Canada doit se conformer aux exigences du code CSA B149. Ce systême de ventillation **doit** se composer de tuyaux, raccords, ciments et apprêts conformes au ULC S636. La tuyauterie de ventillation des gaz, ses accessoires, le terminal concentrique mural ainsi que l'ensemble du drain de condensat extérieur ont été certifiés ULCS 636 pour l'application des composantes IPEX PVC qui sont certifiées à ce standard. Au Canada l'apprêt et le ciment doivent être du même manufacturier que le systême de ventillation - IPEX Système 636, Apprêt PVC/CPVC. Mauve Violette pour conduit en évacuation des gaz et IPEX Système 636(1)™, ciment pour PVC pour conduit en évacuation des gaz, évalué CLASSE IIA, 65 deg. C. doit ëtre utilisé avec ce systèeme d'évacuation - ne pas mélanger l'apprêt et le ciment d'un manufacturier avec le systême de ventillation d'un autre manufacturier. Bien suivre les indications du manufacturier lors de l'utilisation de l'apprêt et du ciment et ne pas utiliser ceux-ci si la date d'expiration est atteinte.

L'opération sécuritaire, tel que définit par ULC S636, du système de ventilation est basé sur les instructions d'installation suivantes, ainsi que l'usage approprié de l'apprêt et ciment. Tout arrët feu et solin de toit utilisés avec ce système doivent être des matériaux listés UL. L'acceptation du standard Canadien CSA B419 est directement relié à l'installation conforme aux instructions ci- haut mentionnées. Le standard Canadien recommande l' inspection par un personel qualifié et ce, une fois par année.

Les autoritées ayant juridiction (inspecteurs de gas, inspecteurs en bâtiments, département des incendies, etc) devraient être consultées avant l'installation afin de déterminer si un permis est requis.

(1) System 636 is a trademark of IPEX Inc.

IMPORTANT

The Commonwealth of Massachusetts requires compliance with regulation 248 CMR as follows:

5.08: Modifications to NFPA-54, Chapter 10

2) Revise 10.8.3 by adding the following additional requirements:

a. For all side wall horizontally vented gas fueled equipment installed in every dwelling, building or structure used in whole or in part for residential purposes, including those owned or operated by the Commonwealth and where the side wall exhaust vent termination is less than seven (7) feet above finished grade in the area of the venting, including but not limited to decks and porches, the following requirements shall be satisfied:

1. INSTALLATION OF CARBON MONOXIDE DETECTORS. At the time of installation of the side wall horizontal vented gas fueled equipment, the installing plumber or gasfitter shall observe that a hard wired carbon monoxide detector with an alarm and battery back-up is installed on the floor level where the gas equipment is to be installed. In addition, the installing plumber or gasfitter shall observe that a battery operated or hard wired carbon monoxide detector with an alarm is installed on each additional level of the dwelling, building or structure served by the side wall horizontal vented gas fueled equipment. It shall be the responsibility of the property owner to secure the services of qualified licensed professionals for the installation of hard wired carbon monoxide detectors

   a. In the event that the side wall horizontally vented gas fueled equipment is installed in a crawl space or an attic, the hard wired carbon monoxide detector with alarm and battery back-up may be installed on the next adjacent floor level.

   b. In the event that the requirements of this subdivision can not be met at the time of completion of installation, the owner shall have a period of thirty (30) days to comply with the above requirements; provided, however, that during said thirty (30) day period, a battery operated carbon monoxide detector with an alarm shall be installed.

2. APPROVED CARBON MONOXIDE DETECTORS. Each carbon monoxide detector as required in accordance with the above provisions shall comply with NFPA 720 and be ANSI/UL 2034 listed and IAS certified.

3. SIGNAGE. A metal or plastic identification plate shall be permanently mounted to the exterior of the building at a minimum height of eight (8) feet above grade directly in line with the exhaust vent terminal for the horizontally vented gas fueled heating appliance or equipment. The sign shall read, in print size no less than one-half (1/2) inch in size, ”GAS VENT DIRECTLY BELOW. KEEP CLEAR OF ALL OBSTRUCTIONS”.

4. INSPECTION. The state or local gas inspector of the side wall horizontally vented gas fueled equipment shall not approve the installation unless, upon inspection, the inspector observes carbon monoxide detectors and signage installed in accordance with the provisions of 248 CMR 5.08(2)(a)1 through 4.

5. EXEMPTIONS: The following equipment is exempt from 248 CMR 5.08(2)(a)1 through 4:

   (1.) The equipment listed in Chapter 10 entitled ”Equipment Not Required To Be Vented” in the most current edition of NFPA 54 as adopted by the Board; and

   (2.) Product Approved side wall horizontally vented gas fueled equipment installed in a room or structure separate from the dwelling, building or structure used in whole or in part for residential purposes.

c. MANUFACTURER REQUIREMENTS - GAS EQUIPMENT VENTING SYSTEM PROVIDED. When the manufacturer of Product Approved side wall horizontally vented gas equipment provides a venting system design or venting system components with the equipment, the instructions provided by the manufacturer for installation of the equipment and the venting system shall include:

1. Detailed instructions for the installation of the venting system design or the venting system components; and
2. A complete parts list for the venting system design or venting system.

d. MANUFACTURER REQUIREMENTS - GAS EQUIPMENT VENTING SYSTEM NOT PROVIDED. When the manufacturer of a Product Approved side wall horizontally vented gas fueled equipment does not provide the parts for venting the flue gases, but identifies “special venting systems”, the following requirements shall be satisfied by the manufacturer:

1. The referenced “special venting system” instructions shall be included with the appliance or equipment installation instructions; and
2. The “special venting systems” shall be Product Approved by the Board, and the instructions for that system shall include a parts list and detailed installation instructions.

e. A copy of all installation instructions for all Product Approved side wall horizontally vented gas fueled equipment, all venting instructions, all parts lists for venting instructions, and/or all venting design instructions shall remain with the appliance or equipment at the completion of the installation.

For questions regarding these requirements, please contact the Commonwealth of Massachusetts Board of State Examiners of Plumbers and Gas Fitters, 239 Causeway Street, Boston, MA 02114. 617-727-9952.

TABLE OF CONTENTS

PAGE

IMPORTANT INFORMATION 2
SAFETY CONSIDERATIONS 3
CODES AND STANDARDS 7
ELECTROSTATIC DISCHARGE (ESD) PRECAUTIONS . . . 7
INTRODUCTION 7
APPLICATIONS 8
Upflow 8
Downflow 11
Horizontal Left 12
Horizontal Right 15
LOCATION 16
INSTALLATION 18
Air Ducts 21
Air for Combustion and Ventilation 28
Combustion Air Pipe 34
Vent Pipe 36
Vent Termination 39
Condensate Drain 43
START-UP, ADJUSTMENTS, AND SAFETY CHECK 44
CHECKLIST 60

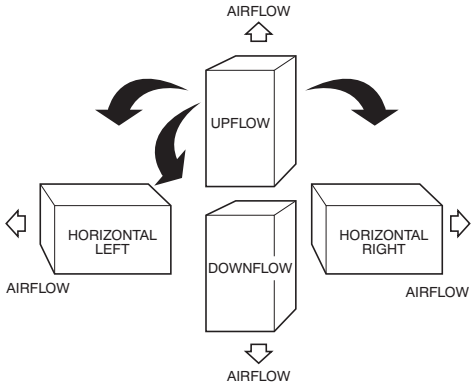

A93041

Fig. 1 - Furnace Orientation

SAFETY CONSIDERATIONS

⚠ CAUTION

FURNACE RELIABILITY HAZARD

Failure to follow this caution may result in unit damage.

Improper installation or misapplication of furnace may require excessive servicing or cause premature component failure. This furnace can be vented as either a direct vent (2-pipe) furnace or as an optional ventilated combustion air application.
A direct vent system shall be installed in accordance with the direct vent (2-pipe) procedures in the Combustion Air and Vent Pipe Systems section within this instruction. For optional ventilated combustion air applications, refer to the ventilated combustion air option procedures in the same section.

Application of this furnace should be indoors with special attention given to vent sizing and material, gas input rate, air temperature rise, unit leveling, and unit sizing.

⚠ WARNING

FIRE, EXPLOSION, ELECTRICAL SHOCK AND CARBON MONOXIDE POISONING HAZARD

Failure to follow this warning could result in personal injury, death, or property damage.

Improper installation, adjustment, alteration, service, maintenance, or use can cause carbon monoxide poisoning, explosion, fire, electrical shock, or other conditions which may cause personal injury or property damage. Consult a qualified installer, service agency, local gas supplier, or your distributor or branch for information or assistance. The qualified installer or agency must use only factory-authorized and listed kits or accessories when modifying this product.

⚠ CAUTION

CUT HAZARD

Failure to follow this caution may result in personal injury.

Sheet metal parts may have sharp edges or burrs. Use care and wear appropriate protective clothing and gloves when handling parts.

Improper installation, adjustment, alteration, service, maintenance, or use can cause explosion, fire, electrical shock, or other conditions which may cause death, personal injury, or property damage. Consult a qualified installer, service agency, or your distributor or branch for information or assistance. The qualified installer or agency must use factory-authorized kits or accessories when modifying this product. Refer to the individual instructions packaged with the kits or accessories when installing.

Follow all safety codes. Wear safety glasses, protective clothing, and work gloves. Have a fire extinguisher available. Read these instructions thoroughly and follow all warnings or cautions include in literature and attached to the unit. Consult local building codes, the current editions of the National Fuel Gas Code (NFGC) NFPA 54/ANSI Z223.1 and the National Electrical Code (NEC) NFPA 70.

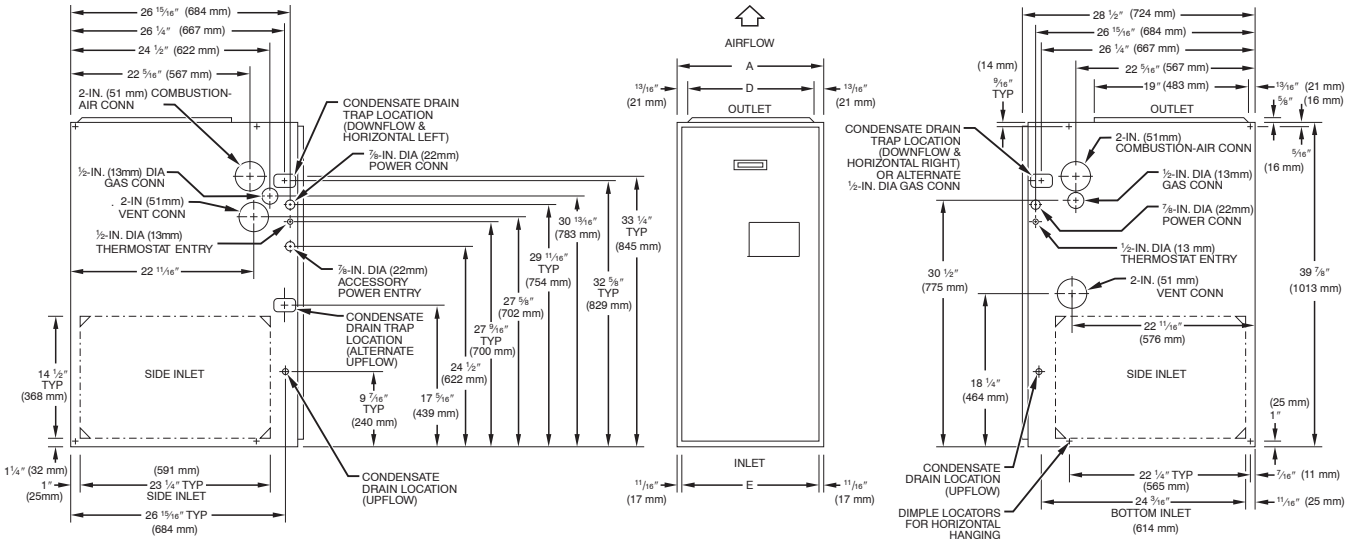

NOTES:
1. Minimum return-air openings at furnace, based on metal duct. If flex duct is used, see flex duct manufactureris recommendations for equivalent diameters.
2. Minimum return-air opening at furnace:
   a. For 800 CFM–16-in. (406mm) round or 14½ (368 mm)x 12-in. (305 mm) rectangle
   b. For 1200 CFM–20-in. (508mm) round or 14½ (368mm)x 19 ½-in. (495mm) rectangle
   c. For 1600 CFM–22-in. (559mm) round or 14½ (368mm)x 23 ¼-in.(591mm) rectangle
   d. For airflow requirements above 1800 CFM, see Air Delivery table in Product Data literature for specific use of single side inlets. The use of both side inlets, a combination of 1 side and the bottom, or the bottom only will ensure adequate return air openings for airflow requirements above 1800 CFM.

A05124

Dimensions (In. / mm)

UNIT SIZE	A	D	E
060–14 / 042060	17–1/2 / 445	15–7/8 / 403	16 / 406
080–14 / 042080	21 / 533	19–3/8 / 492	19–1/2 / 495
080–20 / 060080	21 / 533	19–3/8 / 492	19–1/2 / 495
100–20 / 060100	21 / 533	19–3/8 / 492	19–1/2 / 495
120–20 / 060120	24–1/2 / 622	22–7/8 / 581	23 / 584

Fig. 2 - Dimensional Drawing

In Canada, refer to the current editions of the National Standards of Canada CAN/CSA-B149.1 and .2 Natural Gas and Propane Installation Codes, and Canadian Electrical Code CSA C22.1

Recognize safety information. This is the safety-alert symbol ⚠. When you see this symbol on the unit and in instructions or manuals, be alert to the potential for personal injury.

Understand the signal words **DANGER**, **WARNING**, and **CAUTION**. These words are used with the safety-alert symbol. **DANGER** identifies the most serious hazards which **will** result in severe personal injury or death. **WARNING** signifies hazards which **could** result in personal injury or death. **CAUTION** is used to identify unsafe practices which **may** result in minor personal injury or product and property damage. **NOTE** is used to highlight suggestions which **will** result in enhanced installation, reliability, or operation.

⚠ CAUTION

ENVIRONMENTAL HAZARD

Failure to follow this caution may result in environmental polution.

Remove and recycle all components or materials (i.e., oil, refrigerant, control boards, etc.) before unit final disposal.

The 355CAV Condensing Gas-Fired Furnaces are CSA (formerly AGA and CGA) design-certified for natural and propane gases (see furnace rating plate) and for installation in alcoves, attics, basements, closets, utility rooms, crawlspaces, and garages. The furnace is factory-shipped for use with natural gas. A CSA listed gas conversion kit is required to convert furnace for use with propane gas.

See Fig. 3 for required clearances to combustibles.

Maintain a 1-in. (25 mm) clearance from combustible materials to supply air ductwork for a distance of 36 inches (914 mm) horizontally from the furnace. See NFPA 90B or local code for further requirements.

These furnaces SHALL NOT be installed directly on carpeting, tile, or any other combustible material other than wood flooring. These furnaces are suitable for installation in a structure built on site or a manufactured building completed at final site. The design of this furnace line is NOT CSA design-certified for installation in recreation vehicles, manufactured (mobile) homes or outdoors.

This furnace is designed for continuous return-air minimum temperature of 60°F (16°C) db or intermittent operation down to 55°F (13°C) db such as when used with a night setback thermostat. Return-air temperature must not exceed 80°F (27°C) db. Failure to follow these return air limits may affect reliability of heat exchangers, motors and controls. (See Fig. 4.)

These furnaces are shipped with the drain and pressure tubes connected for UPFLOW applications. Minor modifications are required when used in DOWNFLOW, HORIZONTAL RIGHT, or HORIZONTAL LEFT (supply-air discharge direction) applications as shown in Fig. 1. See details in Applications section.

Install this furnace only in a location and position as specified in LOCATION and INSTALLATION sections of these instructions.

Combustion products must be discharged outdoors. Connect this furnace to an approved vent system only, as specified in the Combustion Air and Vent piping sections of these instructions.

Never test for gas leaks with an open flame. Use a commercially available soap solution made specifically for detection of leaks to check all connections as specified in the GAS PIPING section of these instructions.

Always install the furnace to operate within the furnace's intended rise range with a duct system which has an external static pressure within the allowable range as specified in the SET TEMPERATURE RISE section of these instructions.

When a furnace is installed so that supply ducts carry air circulated by the furnace to areas outside the space containing the furnace, the return air shall also be handled by ducts sealed to the furnace casing and terminating outside the space containing the furnace.

A gas-fired furnace for installation in a residential garage must be installed as specified in the Hazardous Locations section of these instructions and Fig. 5.

The furnace may be used for construction heat provided that the furnace installation and operation complies with the first CAUTION in the LOCATION section of these instructions.

This gas furnace may be used for construction heat provided that:

- The furnace is permanently installed with all electrical wiring, piping, air filters, venting and ducting installed according to these installation instructions. A return air duct is provided, sealed to the furnace casing, and terminated outside the space containing the furnace. This prevents a negative pressure condition as created by the circulating air blower, causing a flame rollout and/or drawing combustion products into the structure.
- The furnace is controlled by a thermostat. It may not be "hot wired" to provide heat continuously to the structure without thermostatic control.
- Clean outside air is provided for combustion. This is to minimize the corrosive effects of adhesives, sealers and other construction materials. It also prevents the entrainment of drywall dust into combustion air, which can cause fouling and plugging of furnace components.
- The temperature of the return air to the furnace is maintained between 55°F (13°C) and 80°F (27°C), with no evening setback or shutdown. The use of the furnace while the structure is under construction is deemed to be intermittent operation per our installation instructions.
- The air temperature rise is within the rated rise range on the furnace rating plate, and the firing rate has been set to the nameplate value.
- The filters used to clean the circulating air during the construction process must be either changed or thoroughly cleaned prior to occupancy.
- The furnace, ductwork and filters are cleaned as necessary to remove drywall dust and construction debris from all HVAC system components after construction is completed.
- After construction is complete, verify furnace operating conditions including ignition, input rate, temperature rise and venting, according to the manufacturer's instructions.

If this furnace is installed with a direct-vent (combustion air and flue) system, a factory accessory termination kit must be installed. In a direct-vent system, all air for combustion is taken directly from the outside atmosphere and all flue products are discharged to the outside atmosphere. See furnace and factory accessory termination kit instructions for proper installation.

These furnaces are shipped with the following materials to assist in proper furnace installation. These materials are shipped in the main blower compartment.

Installer Packet Includes:	
Installation, Start–up, and Operating Instructions	
Service and Maintenance Instructions	
User's Information Manual	
Warranty Certificate	
Loose Parts Bag includes:	Quantity
Collector Box or Condensate trap extension tube	1
Inducer housing drain tube	1
1/2–in CPVC street elbow	2
Drain tube coupling	1
Drain tube coupling grommet	1
Gas line grommet	1
Vent pipe grommet	1
Combustion–air pipe grommet	1
Gas line entry hole filler plug	1
Power entry hole filler plug	2
Condensate trap hole filler plug	3
Vent and combustion–air intake hole filler plug	2
Combustion–air pipe perforated disk assembly	1

INSTALLATION

- This forced air furnace is equipped for use with natural gas at altitudes 0 - 10,000 ft (0 - 3,050m), except 140 size furnaces are only approved for altitudes 0 - 7,000 ft. (0 - 2,135m).
- An accessory kit, supplied by the manufacturer, shall be used to convert to propane gas use or may be required for some natural gas applications.
- This furnace is for indoor installation in a building constructed on site. This furnace may be installed in a manufactured (mobile) home when stated on rating plate and using factory authorized kit..
- This furnace may be installed on combustible flooring in alcove or closet at **Minimum Inches Clearance To Combustible Construction** as described below.
- This furnace requires a special venting system. Refer to the installation instructions for parts list and method of installation. In the US this furnace is for use with schedule-40 PVC, PVC-DWV, CPVC, or ABS-DWV pipe, and must not be vented in common with other gas-fired appliances. In Canada, refer to installation instructions for vent materials. Construction through which vent/air intake pipes may be installed is maximum 24 inches (610 mm), minimum 3/4 inches (19 mm) thickness (including roofing materials).
- Cette fournaise à air pulsé est équipée pour utilisation avec gaz naturel et altitudes comprises entre 0 - 3,050m (0 - 10,000 pi),excepté queles fournaises de 140 taille sont pour altitudes comprises entre 0 - 2,135m (0 - 7,000pi).
- Utiliser une trousse de conversion, fournie par le fabricant, pour passer au gaz propane ou pour certaines installations au gaz naturel.
- Cette fournaise à air pulsé est pour installation à l´intérieur dans un bâtiment construit sur place. Cette fournaise à air pulse peut être installée dans une maison préfabriquée (maison mobile) si prescrit par la plaque signalétique et si'l on utilise une trousse specifiée par le fabricant.
- Cette fournaise peut être installée sur un plancher combustible dans un enfoncement ou un placard en observant les **Dégagement Minimum En Pouces Avec Éléments De Construction Combustibles.**
- Cette fournaise nécessite un système d´évacuation spécial. La méthode d´installation et la liste des pièces nécessaires figurent dans les instructions d´installation. Aux Etats-Unis, cette fournaise doit s´utiliser avec la tuyauterie des nomenclatures 40 PVC, PVC-DWV, CPVC, ou ABS-DWV et elle ne peut pas être ventilée conjointment avec d´autres appareils à gaz. Au Canada, referer aux instructions d'installation pour lex matériaux à ventiler. Épaisseur de la construction au travers de laquelle il est possible de faire passer les tuyaux d'aération (admission/évacuation): 24 po (610 mm) maximum, 3/4 po (19mm) minimum (y compris la toiture).

For upflow and downflow applications, furnace must be installed level, or pitched within 1/2" (12.7mm) of level. For a horizontal application, the furnace must be pitched minimum 1/4" (6.35mm) to maximum of 1/2" (12.7mm) forward for proper drainage. See Installation Manual for IMPORTANT unit support details on horizontal applications.

Pour des applications de flux ascendant et descendant, la fournaise doit être installée de niveau ou inclinée à pas plus de 1/2" (12.7mm) du niveau. Pour une application horizontale, la fournaise doit être inclinée entre minimum 1/4" (6.35mm) et maximum 1/2" (12.7mm) du niveau pour le drainage approprié. En cas d´installation en position horizontale, consulter les renseignements IMPORTANTS sur le support dans le manuel d´installation.

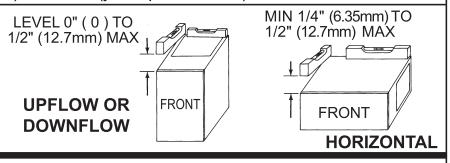

MINIMUM INCHES CLEARANCE TO COMBUSTIBLE CONSTRUCTION

ALL POSITIONS:

* Minimum front clearance for service 24 inches (610mm).

† † 140 size furnaces require 1 inch back clearance to combustible materials.

DOWNFLOW POSITIONS:

† For installation on combustible floors only when installed on special base No. KGASB0201ALL or NAHA01101SB, Coil Assembly, Part No. CAR, CAP, CNPV, CNRV or Coil Casing, Part No. KCAKC, or WENC or WTNC.

HORIZONTAL POSITIONS:

Line contact is permissible only between lines formed by intersections of top and two sides of furnace jacket, and building joists, studs, or framing.

§ Clearance shown is for air inlet and air outlet ends.

Ø 120 and 140 size furnaces require 1 inch bottom clearance to combustible materials.

DÉGAGEMENT MINIMUM EN POUCES AVEC ÉLÉMENTS DE CONSTRUCTION COMBUSTIBLES

POUR TOUS LES POSITIONS:

* Dégagement avant minimum de 24 po (610mm) pour l´entretien.

† † Pour les fournaises de 140 taille, 1 po (25mm) dégagement des matériaux combustibles est requis au-arriere.

POUR LA POSITION COURANT DESCENDANT:

† Pour l´installation sur le plancher combustible seulement quand on utilise la base spéciale, pièce nº KGASB0201ALL ou NAHA01101SB, l´ensemble serpentin, pièce nº CAR, CAP, CNPV, CNRV, ou le carter de serpentin, pièce nº KCAKC ou WENC ou WTNC.

POUR LA POSITION HORIZONTALE:

Le contact n´est permis qúentre les lignes formées par les intersections du dessus et des deuxcôtés de la chemise de la fournaise, et des solives, des montants ou de la charpente du bâtiment.

§ La distance indiquée concerne l´extrémité du tuyau d´arrivée d´air et l´extrémité du tuyau de sortie d´air.

Ø Pour les fournaises de 120 et 140 taille, 1 po (25mm) dégagement des matériaux combustibles est requis au-dessous.

335122-201 REV. B LIT TOP

This furnace is approved for UPFLOW, DOWNFLOW and HORIZONTAL installations.

Cette fournaise est approuvée pour l´installation HORIZONTALE et la circulation d´air VERS LE HAUT et VERS LE BAS.

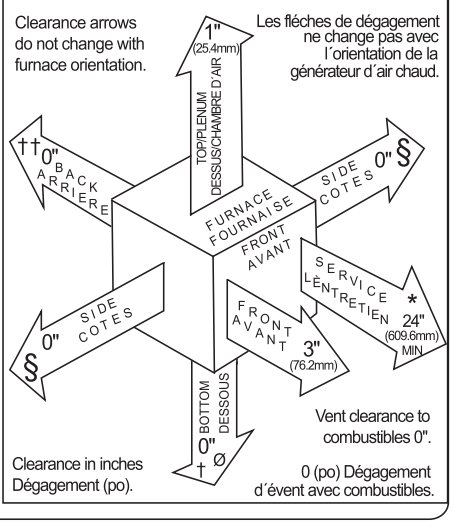

A08435

Fig. 3 - Clearances to Combustibles

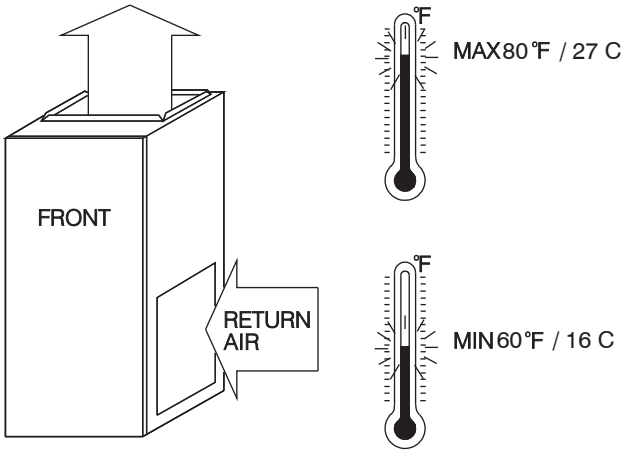

A06745

Fig. 4 - Return-Air Temperature

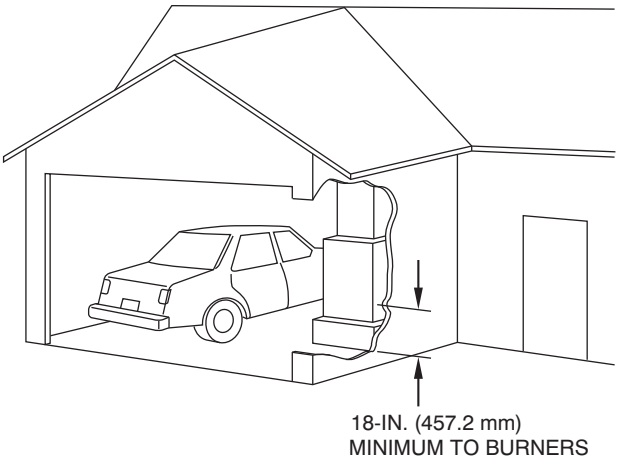

A93044

Fig. 5 - Installation in a Garage

The furnace shall be installed so that the electrical components are protected from water.

For accessory installation details, refer to applicable installation literature.

CODES AND STANDARDS

Follow all national and local codes and standards in addition to these instructions. The installation must comply with regulations of the serving gas supplier, local building, heating, plumbing, and other codes. In absence of local codes, the installation must comply with the national codes listed below and all authorities having jurisdiction in Canada.

In the United States and Canada, follow all codes and standards for the following:

Safety

- US: National Fuel Gas Code (NFGC) NFPA 54-2006/ANSI Z223.1-2006 and the Installation Standards, Warm Air Heating and Air Conditioning Systems ANSI/NFPA 90B
- CANADA: National Standard of Canada, Natural Gas and Propane Installation Code (CAN/CSA-B149.1-05) CSA B149.1-05

General Installation

- US: NFGC and the NFPA 90B. For copies, contact the National Fire Protection Association Inc., Batterymarch Park, Quincy, MA 02269; or for only the NFGC contact the American Gas Association, 400 N. Capitol, N.W., Washington DC 20001.
- A manufactured (Mobile) home installation must conform with the *Manufactured Home Construction and Safety Standard, Title 24 CFR, Part 3280,* or when this standard is not applicable, the Standard for *Manufactured Home Installation (Manufactured Home Suites, Communities, and Set-Ups), ANSI/NCS A225.1, and/or CAN/CSA-z240, MH Series Mobile Homes.*
- CANADA: CAN/CSA-B149.1-05. For a copy, contact Standard Sales, CSA International, 178 Rexdale Boulevard, Etobicoke (Toronto), Ontario, M9W 1R3, Canada.

Combustion and Ventilation Air

- US: Section 9.3 NFPA 54/ANSI Z223.1-2006, Air for Combustion and Ventilation.
- CANADA: Part 8 of the CAN/CSA-B149.1-05, Venting Systems and Air Supply for Appliances.

Duct Systems

- US and CANADA: Air Conditioning Contractors Association (ACCA) Manual D, Sheet Metal and Air Conditioning Contractors National Association (SMACNA), or American Society of Heating, Refrigeration, and Air Conditioning Engineers (ASHRAE) 2005 Fundamentals Handbook Chapter 35.

Acoustical Lining and Fibrous Glass Duct

- US and CANADA: current edition of SMACNA, NFPA 90B as tested by UL Standard 181 for Class I Rigid Air Ducts.

Gas Piping and Gas Pipe Pressure Testing

- US: Section 9.3 NFPA 54/ANSI Z223.1-2006 NFGC; chapters 5, 6, 7, and 8 and national plumbing codes.
- CANADA: CAN/CSA-B149.1-05 Parts 4, 5, 6, and 9.

In the state of Massachusetts:

- This product must be installed by a licensed plumber or gas fitter.
- When flexible connectors are used, the maximum length shall not exceed 36 inches (914 mm).
- When lever type gas shutoffs are used they shall be T-handle type.
- The use of copper tubing for gas piping is not approved by the state of Massachusetts.

Electrical Connections

- US: National Electrical Code (NEC) ANSI/NFPA 70-2008.
- CANADA: Canadian Electrical Code CSA C22.1.

ELECTROSTATIC DISCHARGE (ESD) PRECAUTIONS

⚠ CAUTION

UNIT DAMAGE HAZARD

Failure to follow this caution may result in damage to unit components.

Electrostatic discharge can affect electronic components. Take precautions during furnace installation and servicing to protect the furnace electronic control. Precautions will prevent electrostatic discharges from personnel and hand tools which are held during the procedure. These precautions will help to avoid exposing the control to electrostatic discharge by putting the furnace, the control, and the person at the same electrostatic potential.

3. Disconnect all power to the furnace. Multiple disconnects may be required. DO NOT TOUCH THE CONTROL OR ANY WIRE CONNECTED TO THE CONTROL PRIOR TO DISCHARGING YOUR BODY'S ELECTROSTATIC CHARGE TO GROUND.
4. Firmly touch a clean, unpainted, metal surface of the furnace chassis which is close to the control. Tools held in a person's hand during grounding will be satisfactorily discharged.
5. After touching the chassis, you may proceed to service the control or connecting wires as long as you do nothing that recharges your body with static electricity (for example; DO NOT move or shuffle your feet, DO NOT touch ungrounded objects, etc.).
6. If you touch ungrounded objects (recharge your body with static electricity), firmly touch furnace again before touching control or wires.
7. Use this procedure for installed and uninstalled (ungrounded) furnaces.
8. Before removing a new control from its container, discharge your body's electrostatic charge to ground to protect the control from damage. If the control is to be installed in a furnace, follow items 1 through 5 before bringing the control or yourself into contact with the furnace. Put all used AND new controls into containers before touching ungrounded objects.
9. An ESD service kit (available from commercial sources) may also be used to prevent ESD damage.

INTRODUCTION

The model 355CAV Direct Vent, Upflow, Gas-Fired, Category IV, condensing furnace is available in model sizes ranging in input capacities of 60,000 to 120,000 Btuh.

APPLICATIONS

General

Some assembly and modifications are required for furnaces installed in any of the four applications shown in Fig. 1. All drain

and pressure tubes are connected as shown in Fig. 7. See appropriate application instructions for these procedures.

⚠ CAUTION

PROPERTY DAMAGE HAZARD

Failure to follow this caution may result in property damage.

Local codes may require a drain pan under entire furnace and condensate trap when a condensing furnace is used in an attic application or over a finished ceiling.

NOTE: In Canada, installations shall be in accordance with current CAN/CSA-B149.1-05 and/or local codes.

UPFLOW APPLICATION

An upflow furnace application is where furnace blower is located below combustion and controls section of furnace, and conditioned air is discharged upwards.

Condensate Trap (Factory-Shipped Orientation)

The condensate trap is factory installed in the blower shelf and factory connected for UPFLOW applications. A factory-supplied tube is used to extend the condensate trap drain connection to the desired furnace side for field drain attachment. See Condensate Trap Tubing section for drain tube extension details. (See Fig. 6.)

Condensate Trap Tubing (Factory-Shipped Orientation)

NOTE: See Fig. 7 or tube routing label on main furnace door to confirm location of these tubes.

1. Collector Box Drain, Inducer Housing Drain, Relief Port, and Pressure Switch Tubes.
   These tubes should be factory attached to condensate trap and pressure switch ready for use in UPFLOW applications. These tubes can be identified by their connection location and also by a color label on each tube. These tubes are identified as follows: collector box drain tube (blue label), inducer housing drain tube (violet label or molded), relief port tube (green label), and pressure switch tube (pink label).
2. Condensate Trap Drain Tube
   The condensate trap drain connection must be extended for field attachment by doing the following:
   f. Determine location of field drain connection. (See Fig. 2 or 7.)

NOTE: If internal filter or side filter/media cabinet is used, drain tube should be located to opposite side of casing from return duct attachment to assist in filter removal.

   g. Remove and discard casing drain hole plug button from desired side.
   h. Install drain tube coupling grommet (factory-supplied in loose parts bag) in selected casing hole.
   i. Slide drain tube coupling (factory-supplied in loose parts bag) through grommet so long end of coupling faces blower.
   j. Cement 2 factory-supplied 1/2-in. (13 mm) street CPVC elbows to rigid drain tube connection on condensate trap. (See Fig. 7.) These elbows must be cemented together and cemented to condensate trap drain connection.

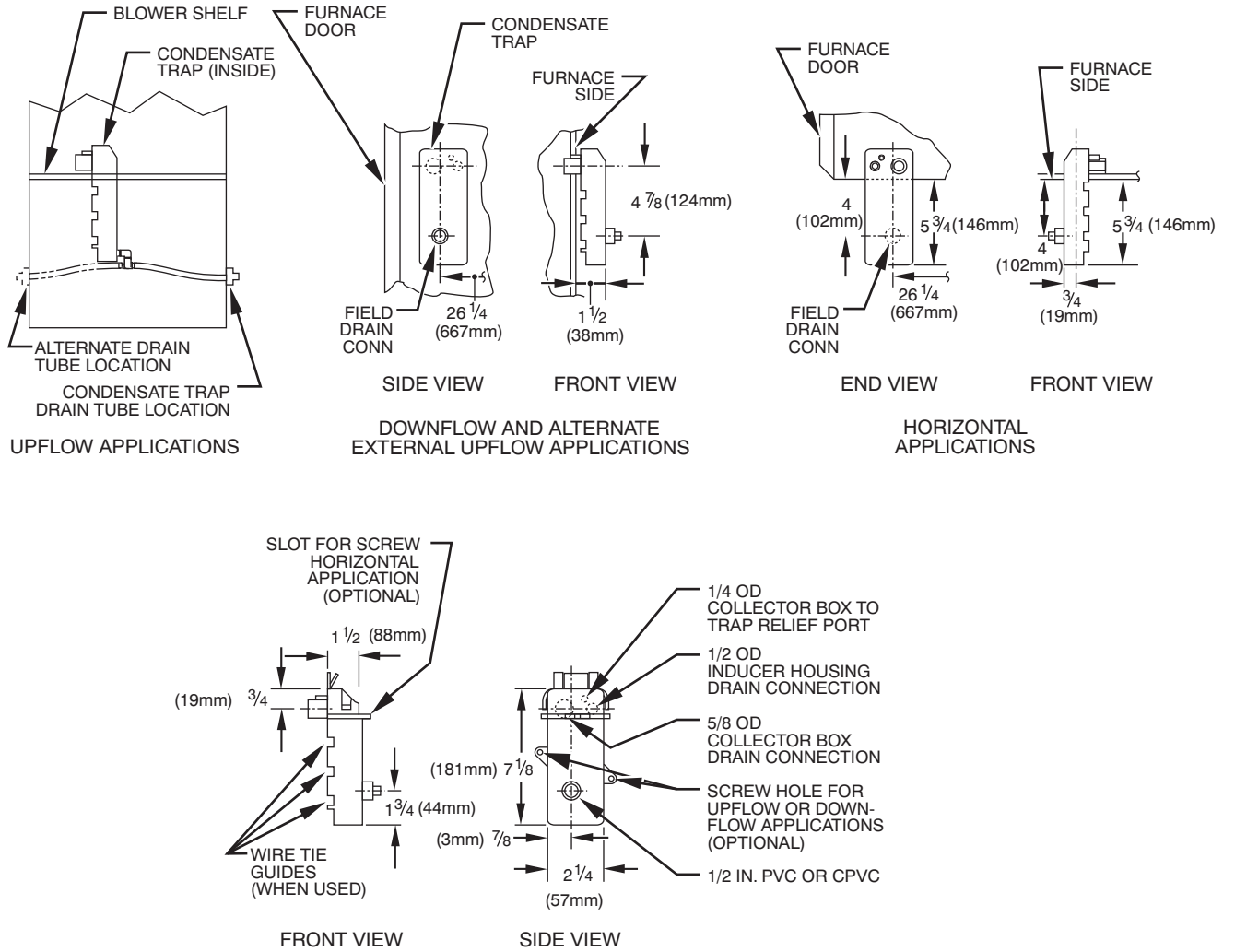

Fig. 6 - Condensate Trap

NOTE: Failure to use CPVC elbows may allow drain to kink, preventing draining.

k. Connect larger diameter drain tube and clamp (factory-supplied in loose parts bag) to condensate trap and clamp securely.

l. Route tube to coupling and cut to appropriate length.

m. Attach tube to coupling and clamp securely.

Condensate Trap (Alternate Upflow Orientation)

An alternate location for the condensate trap is the left-hand side of casing. (See Fig. 2 and 8.)

NOTE: If the alternate left-hand side of casing location is used, the factory-connected drain and relief port tubes must be disconnected and modified for attachment. See Condensate Trap Tubing (Alternate Upflow Orientation) section for tubing attachment.

To relocate condensate trap to the left-hand side, perform the following:

1. Remove three tubes connected to condensate trap.
2. Remove trap from blower shelf by gently pushing tabs inward and rotating trap.
3. Install casing hole filler cap (factory-supplied in loose parts bag) into blower shelf hole where trap was removed.

⚠ WARNING

CARBON MONOXIDE POISONING HAZARD

Failure to follow this warning could result in personal injury or death.

Casing hole filler cap must be installed in blower shelf hole when condensate trap is relocated to prevent combustion products being drawn in from appliances in the equipment room.

4. Install condensate trap into left-hand casing hole by inserting tube connection stubs through casing hole and rotating until tabs snap into locking position.
5. Fill unused condensate trap casing holes with plastic filler caps (factory-supplied in loose parts bag).

Condensate Trap Tubing (Alternate Upflow Orientation)

NOTE: See Fig. 8 or tube routing label on main furnace door to confirm location of these tubes.

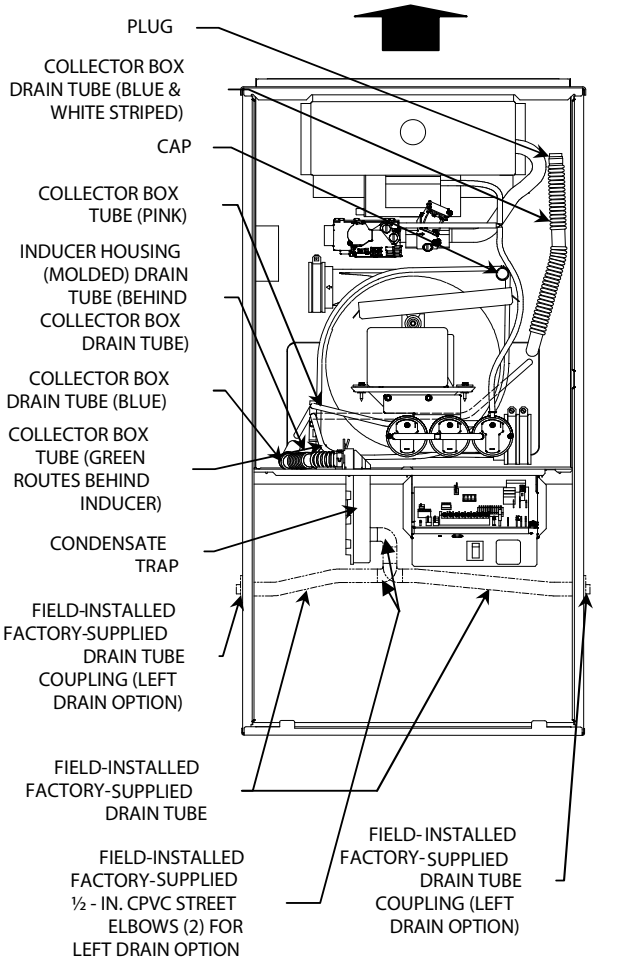

Fig. 7 - Factory-Shipped Trap Location (Shown with Blower Access Panel Removed)

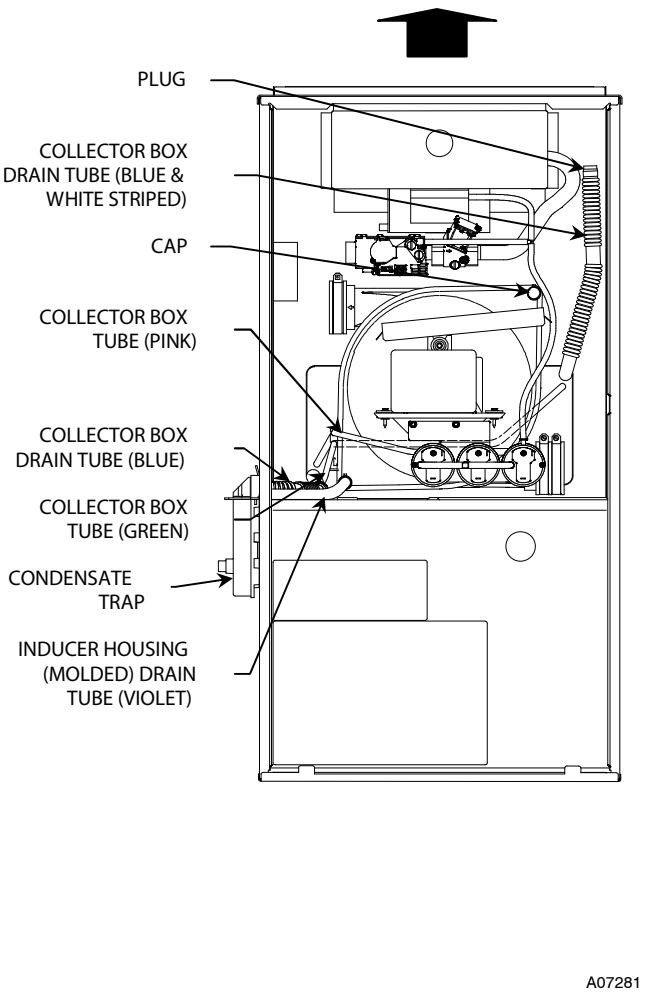

Fig. 8 - Alternate Trap Location

1. Collector Box Drain Tube
   Connect collector box drain tube (blue label) to condensate trap.

NOTE: On 17-1/2-in. (445 mm) wide furnaces ONLY, cut tube between corrugated sections to prevent kinks.

2. Inducer Housing Drain Tube
   a. Remove and discard LOWER (molded) inducer housing drain tube which was previously connected to condensate trap.
   b. Use inducer housing drain extension tube (violet label and factory-supplied in loose parts bag) to connect LOWER inducer housing drain connection to condensate trap.
   c. Determine appropriate length, then cut and connect tube.
   d. Clamp tube to prevent any condensate leakage.
3. Relief Port Tube
   a. Connect relief port tube (green label) to condensate trap.
   b. Extend this tube (if required) by splicing to small diameter tube (factory-supplied in loose parts bag).
   c. Determine appropriate length, then cut and connect tube.

Condensate Trap Field Drain Attachment

Refer to Condensate Drain section for recommendations and procedures.

Pressure Switch Tubing

The LOWER collector box pressure tube (pink label) is factory connected to the pressure switch and should not require any modification.

NOTE: See Fig. 7 or 8 or tube routing label on main furnace door to check for proper connections.

Upper Collector Box and Inducer Housing (Unused) Drain Connections

Upper Collector Box Drain Connection

Attached to the UPPER collector box drain connection is a factory-installed corrugated, plugged tube (blue and white striped label). This tube is plugged to prevent condensate leakage in this application. Ensure this tube is plugged.

NOTE: See Fig. 7 or 8 or tube routing label on main furnace door to check for proper connections.

Upper Inducer Housing Drain Connection

Attached to the UPPER (unused) inducer housing drain connection is a cap and clamp. This cap is used to prevent condensate leakage in this application. Ensure this connection is capped.

NOTE: See Fig. 7 or 8 or tube routing label on main furnace door to check for proper connections.

Condensate Trap Freeze Protection

Refer to Condensate Drain Protection section for recommendations and procedures.

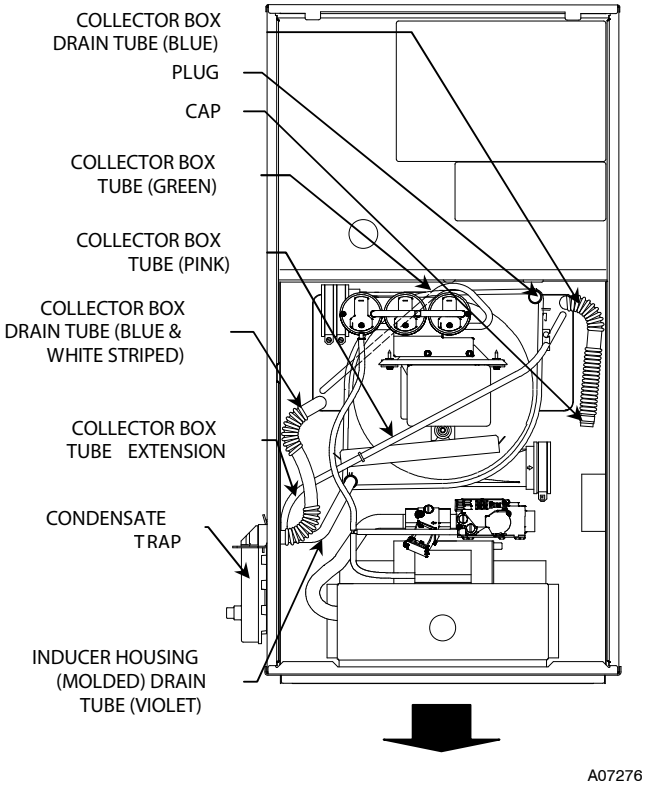

Fig. 9 - Downflow Tube Configuration (Left-hand Trap Installation)

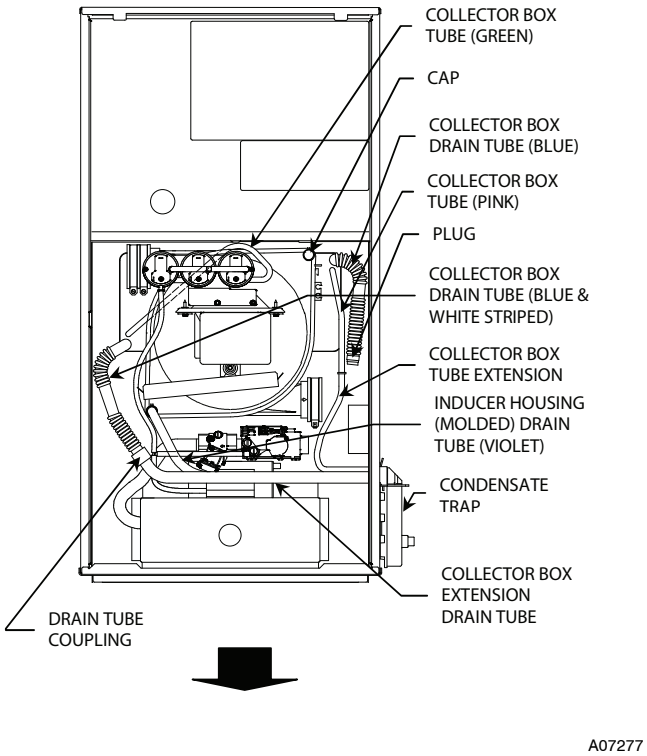

Fig. 10 - Downflow Tube Configuration (Right-Hand Trap Configuration)

DOWNFLOW APPLICATIONS

A downflow furnace application is where furnace blower is located above combustion and controls section of furnace, and conditioned air is discharged downwards.

Condensate Trap Location

The condensate trap must be removed from the factory-installed blower shelf location and relocated in selected application location as shown in Fig. 2, 9, or 10.

To relocate condensate trap from the blower shelf to desired location, perform the following:

1. Remove three tubes connected to condensate trap.
2. Remove trap from blower shelf by gently pushing tabs inward and rotating trap.
3. Remove casing hole filler cap from casing hole. (See Fig. 2 and 10.)
4. Install casing hole filler cap (factory-supplied in loose parts bag) into blower shelf hole where trap was removed.

⚠ WARNING

CARBON MONOXIDE POISONING HAZARD

Failure to follow this warning could result in personal injury or death.

Casing hole filler cap must be installed in blower shelf hole when condensate trap is relocated to prevent combustion products being drawn in from appliances in the equipment room.

5. Install condensate trap into left-hand side casing hole by inserting tube connection stubs through casing hole and rotating until tabs snap into locking position.
6. Fill unused condensate trap casing holes with plastic filler caps (factory-supplied in loose parts bag).

Condensate Trap Tubing

NOTE: See Fig. 9 or 10 or tube routing label on main furnace door to check for proper connections.

1. Collector Box Drain Tube
   a. Remove factory-installed plug from LOWER collector box drain tube (blue and white striped label).
   b. Install removed clamp and plug into UPPER collector box drain tube (blue label) which was connected to condensate trap.
   c. Connect LOWER collector box drain connection to condensate trap.
      (3.) Condensate Trap Located on Left Side of Casing
         a. Connect LOWER collector box drain tube (blue and white striped label) to condensate trap. Tube does not need to be cut.
         b. Clamp tube to prevent any condensate leakage.
      (4.) Condensate Trap Located on Right Side of Casing
         a. Install drain tube coupling (factory-supplied in loose parts bag) into collector box drain tube (blue and white striped label) which was previously plugged.
         b. Connect larger diameter drain tube (factory-supplied in loose parts bag) to drain tube coupling, extending collector box drain tube for connection to condensate trap.
         c. Route extended collector box drain tube between gas valve and inlet housing as shown in Fig. 10.
         d. Determine appropriate length and cut.
         e. Connect to condensate trap.
2. Inducer Housing Drain Tube
   a. Remove factory-installed cap and clamp from LOWER inducer housing drain connection.

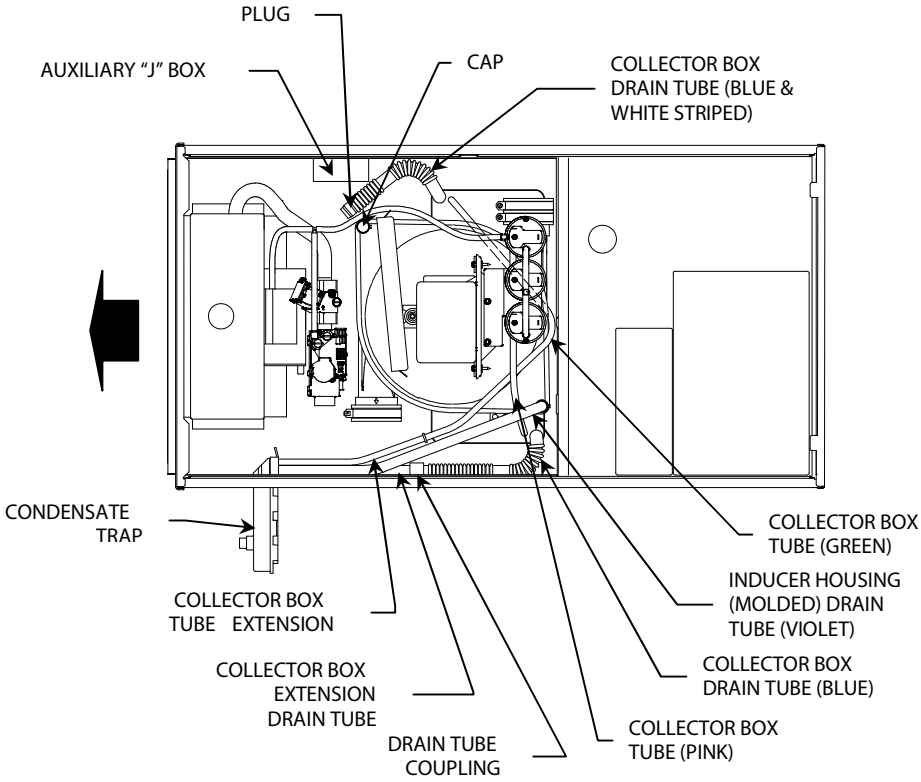

A07278

Fig. 11 - Horizontal Left Tube Configuration

b. Remove and discard UPPER (molded) inducer housing drain tube which was previously connected to condensate trap.

c. Install cap and clamp on UPPER inducer housing drain connection where molded drain tube was removed.

d. Use inducer housing drain tube (violet label and factory-supplied in loose parts bag) to connect LOWER inducer housing drain connection to the condensate trap.

e. Connect inducer housing drain connection to condensate trap.

(1.) Condensate Trap Located on Left Side of Casing

a. Determine appropriate length and cut.

b. connect tube to condensate trap.

c. Clamp tube to prevent any condensate leakage.

(2.) Condensate Trap Located on Right Side of Casing

a. Route inducer housing drain tube (violet label) directly from inducer housing to condensate trap.

b. Determine appropriate length and cut.

c. Connect tube to condensate trap.

d. Clamp tube to prevent any condensate leakage.

3. Relief Port Tube
Refer to Pressure Switch Tubing section for connection procedure.

Condensate Trap Field Drain Attachment

Refer to Condensate Drain section for recommendations and procedures.

Pressure Switch Tubing

One collector box pressure tube (pink label) is factory connected to the pressure switch for use when furnace is installed in UPFLOW or HORIZONTAL LEFT applications. The tube MUST be disconnected and used or the condensate trap relief port tube. The other collector box pressure tube (green label) which was factory connected to the condensate trap relief port connection MUST be connected to the pressure switch in DOWNFLOW or HORIZONTAL RIGHT applications.

NOTE: See Fig. 9 or 10 or tube routing label on man furnace door to check for proper connections.

Relocate tubes as described below.

1. Disconnect collector box pressure tube (pink label) attached to pressure switch.
2. Extend collector box pressure tube (green label) which was previously connected to condensate trap relief port connection by splicing to small diameter tube (factory-supplied in loose parts bag).
3. Connect collector box pressure tube (green label) to pressure switch connection labeled COLLECTOR BOX.
4. Extend collector box pressure tube (pink label) which was previously connected to pressure switch by splicing to remaining small diameter tube (factory-supplied in loose parts bag).
5. Route this extended tube (pink label) to condensate trap relief port connection.
6. Determine appropriate length, cut, and connect tube.
7. Clamp tube to relief port connection.

Condensate Trap Freeze Protection

Refer to Condensate Drain Protection section for recommendations and procedures.

HORIZONTAL LEFT (SUPPLY-AIR DISCHARGE) APPLICATIONS

A horizontal left furnace application is where furnace blower is located to the right of combustion and controls section of furnace, and conditioned air is discharged to the left.

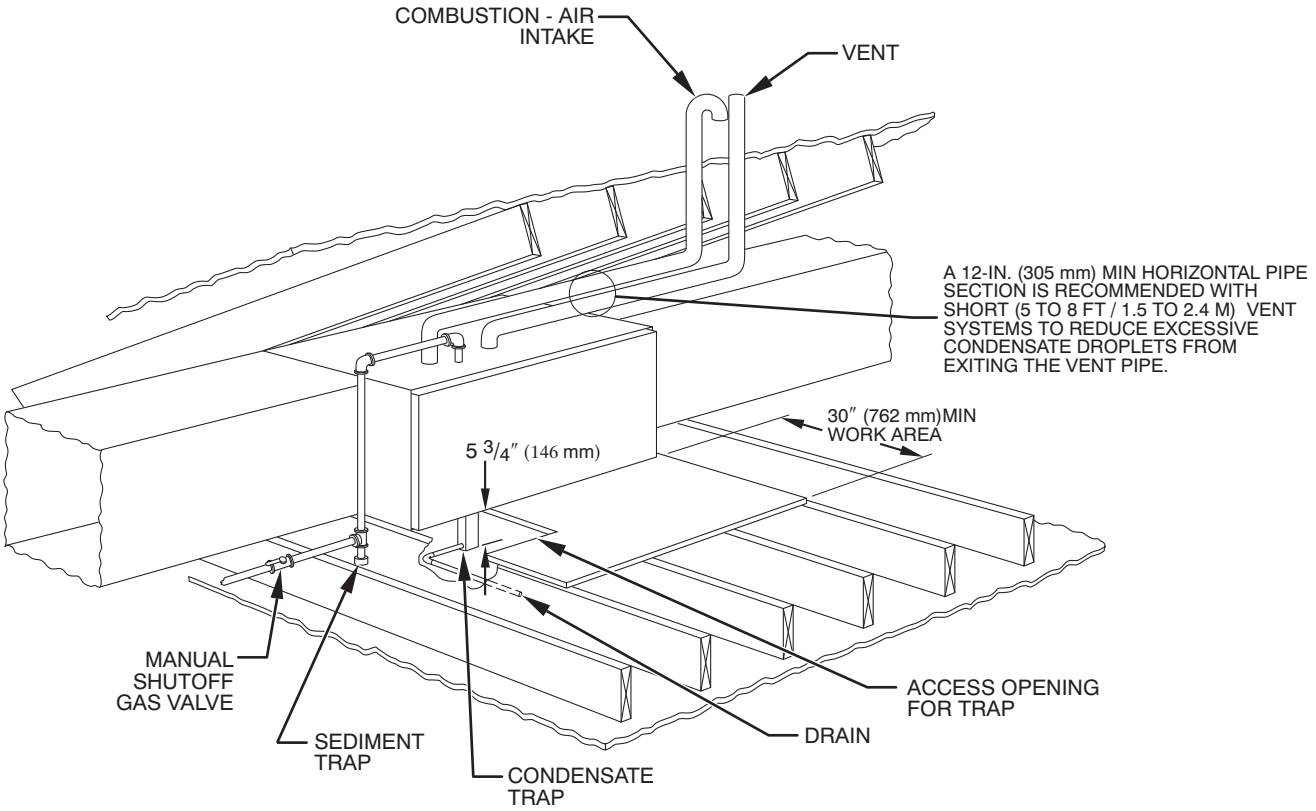

NOTE: LOCAL CODES MAY REQUIRE A DRAIN PAN UNDER THE FURNACE AND CONDENSATE TRAP WHEN A CONDENSING FURNACE IS INSTALLED ABOVE FINISHED CEILINGS.

A93031

Fig. 12 - Attic Location and Working Platform for Direct Vent (2-Pipe) Application

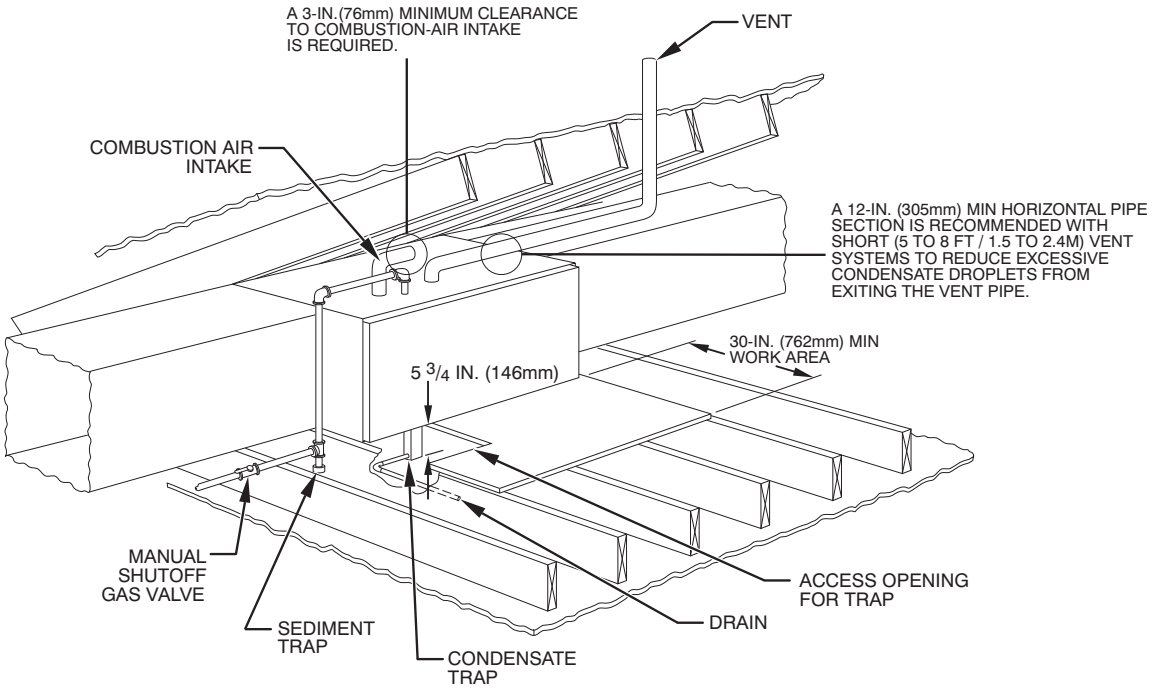

NOTE: LOCAL CODES MAY REQUIRE A DRAIN PAN UNDER THE FURNACE AND CONDENSATE TRAP WHEN A CONDENSING FURNACE IS INSTALLED ABOVE FINISHED CEILINGS.

A96184

Fig. 13 - Attic Location and Working Platform for Ventilated Combustion Air Applications

⚠ CAUTION

PROPERTY DAMAGE

Failure to follow this caution may result in property damage.

Local codes may require a drain pan under entire furnace and condensate trap when a condensing furnace is used in an attic application or over a finished ceiling.

NOTE: In Canada, installations shall be in accordance with current NSCNGPIC and/or local codes.

Condensate Trap Location

The condensate trap must be removed from the factory-installed blower shelf location and relocated in selected application location as shown in Fig. 2 or 11.

To relocate condensate trap from the blower shelf to desired location, perform the following:

1. Remove three tubes connected to condensate trap.
2. Remove trap from blower shelf by gently pushing tabs inward and rotating trap.
3. Remove casing hole filler cap from casing hole. (See Fig. 2 or 11.)
4. Install casing hole filler cap (factory-supplied in loose parts bag) into blower shelf hole where trap was removed.

⚠ WARNING

CARBON MONOXIDE POISONING HAZARD

Failure to follow this warning could result in personal injury or death.

Casing hole filler cap must be installed in blower shelf hole when condensate trap is relocated to prevent combustion products being drawn in from appliances in the equipment room.

5. Install condensate trap into left-hand side casing hole by inserting tube connection stubs through casing hole and rotating until tabs snap into locking position.
6. Fill unused condensate trap casing holes with plastic filler caps (factory-supplied in loose parts bag).

Condensate Trap Tubing

NOTE: See Fig. 11 or tube routing label on main furnace door to check for proper connections.

1. Collector Box Drain Tube
   a. Install drain tube coupling (factory-supplied in loose parts bag) into collector box drain tube (blue label) which was previously connected to condensate trap.
   b. Connect large diameter drain tube and clamp (factory-supplied in loose parts bag) to drain tube coupling, extending collector box drain tube.
   c. Route extended tube (blue label) to condensate trap and cut to appropriate length.
   d. Clamp tube to prevent any condensate leakage.
2. Inducer Housing Drain Tube
   a. Remove and discard LOWER (molded) inducer housing drain tube which was previously connected to condensate trap.
   b. Use inducer housing drain extension tube (violet label and factory-supplied in loose parts bag) to connect LOWER inducer housing drain connection to condensate trap.
   c. Determine appropriate length, cut and connect tube.
   d. Clamp tube to prevent any condensate leakage.
3. Relief Port Tube
   a. Extend collector box tube (green label) which was previously connected to condensate trap by splicing to small diameter tube (factory-supplied in loose parts bag).
   b. Route extended collector box pressure tube to relief port connection on condensate trap.
   c. Determine appropriate length, cut, and connect tube.
   d. Clamp tube to prevent any condensate leakage.

Condensate Trap Field Drain Attachment

Refer to Condensate Drain section for recommendations and procedures.

Pressure Switch Tubing

The LOWER collector box pressure tube (pink label) is factory connected to the High Pressure Switch for use when furnace is installed in UPFLOW applications. This tube MUST be disconnected, extended rerouted, and then reconnected to the pressure switch in HORIZONTAL LEFT applications for 060 and 080 heating input furnaces.

NOTE: See Fig. 11 or tube routing label on main furnace door to check for proper connections.

Modify tube as described below.

1. Disconnect collector box pressure tube (pink label) attached to High Pressure Switch.
2. Use smaller diameter tube (factory-supplied in loose parts bag) to extend tube disconnected in Item 1.
3. Route extended tube:
   a. Behind inducer housing.
   b. Between blower shelf and inducer housing.
4. Determine appropriate length, cut, and reconnect tube to High Pressure Switch connections labeled COLLECTOR BOX.

Condensate Trap Freeze Protection

Refer to Condensate Drain Protection section for recommendations and procedures.

Construct a Working Platform

Construct working platform where all required furnace clearances are met. (See Fig. 3 and 12 or 13.)

⚠ CAUTION

UNIT OPERATION HAZARD

Failure to follow this caution may result in intermittent unit operation.

The condensate trap MUST be installed below furnace. See Fig. 6 for dimensions. The drain connection to condensate trap must also be properly sloped to an open drain.

NOTE: A 12-in. (305 mm) minimum offset pipe section is recommended with short (5 to 8 ft. or 1.5M to 2.4M) vent systems. This recommendation is to reduce excessive condensate droplets from exiting the vent pipe. (See Fig. 12, 13, or 44.)

HORIZONTAL RIGHT (SUPPLY-AIR DISCHARGE) APPLICATIONS

A horizontal right furnace application is where furnace blower is located to the left of combustion and controls section of furnace, and conditioned air is discharged to the right.

⚠ CAUTION

PROPERTY DAMAGE HAZARD

Failure to follow this caution may result in property damage.

Local codes may require a drain pan under entire furnace and condensate trap when a condensing furnace is used in an attic application or over a finished ceiling.

NOTE: In Canada, installations shall be in accordance with current NSCNGPIC and/or local codes.

NOTE: The auxiliary junction box (J-box) MUST be relocated to opposite side of furnace casing. (See Fig. 14.) See Electrical Connection section for J-box relocation.

Condensate Trap Location

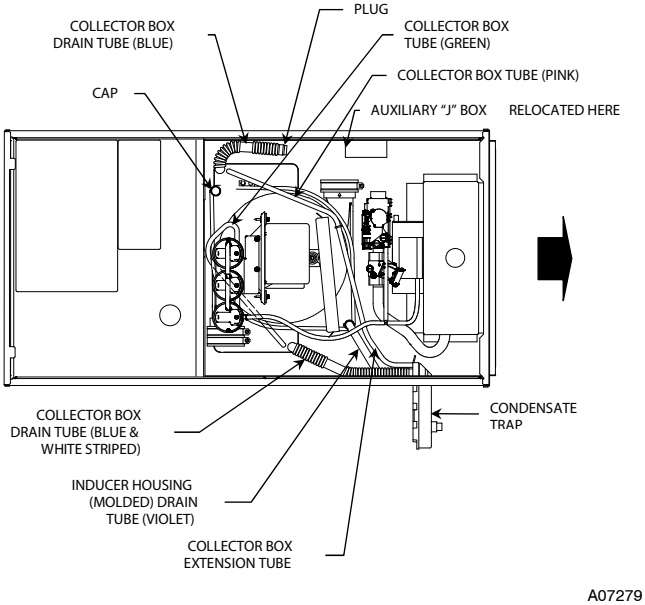

Fig. 14 - Horizontal Right Tube Configuration

The condensate trap must be removed from the factory-installed blower shelf location and relocated in selected application location as shown in Fig. 2 or 14.

To relocate condensate trap from the blower shelf to desired location, perform the following:

1. Remove three tubes connected to condensate trap.
2. Remove trap from blower shelf by gently pushing tabs inward and rotating trap.

⚠ WARNING

CARBON MONOXIDE POISONING HAZARD

Failure to follow this warning could result in personal injury or death.

Casing hole filler cap must be installed in blower shelf hole when condensate trap is relocated to prevent combustion products being drawn in from appliances in the equipment room.

3. Install casing hole filler cap (factory-supplied in loose parts bag) into blower shelf hole where trap was removed.
4. Install condensate trap into right-hand side casing hole by inserting tube connection tabs through casing hole and rotating until tabs snap into locking position.
5. Fill unused condensate trap casing holes with plastic filler caps (factory-supplied in loose parts bag).

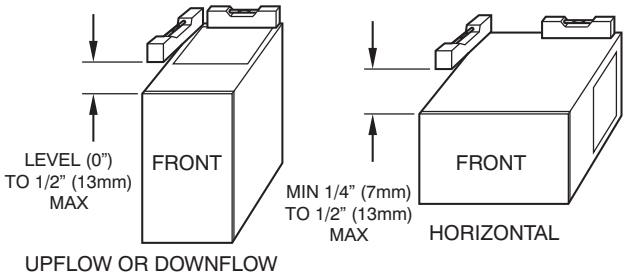

Fig. 15 - Proper Condensate Drainage

Condensate Trap Tubing

NOTE: See Fig. 14 or tube routing label on main furnace door to check for proper connections.

1. Collector Box Drain Tube
   a. Remove factory-installed plug from LOWER collector box drain tube (blue and white striped label).
   b. Install removed clamp and plug into UPPER collector box drain tube (blue label) which was previously connected to condensate trap.
   c. Connect LOWER collector box drain tube (blue and white striped label) to condensate trap. Tube does not need to be cut.
   d. Clamp tube to prevent any condensate leakage.
2. Inducer Housing Drain Tube
   a. Remove factory-installed cap and clamp from LOWER inducer housing drain connection.
   b. Remove and discard UPPER (molded) inducer housing drain tube which was previously connected to condensate trap.
   c. Install cap and clamp on UPPER inducer housing drain connection where molded drain tube was removed.
   d. Use inducer housing drain extension tube (violet label and factory-supplied in loose parts bag) to connect LOWER inducer housing drain connection to condensate trap.
   e. Determine appropriate length, cut, and connect tube to condensate trap.
   f. Clamp tube to prevent any condensate leakage.
3. Relief Port Tube
   Refer to Pressure Switch Tubing section for recommendations and procedures.

Condenste Trap Field Drain Attachment

Refer to Condensate Drain section for recommendations and procedures.

Pressure Switch Tubing

One collector box pressure tube (pink label) is factory connected to the pressure switch for use when furnace is installed in UPFLOW or HORIZONTAL LEFT applications. This tube MUST be disconnected and used for the condensate trap relief port tube. The other collector box pressure tube (green label) which was factory connected to the condensate trap relief port connection MUST be connect to the pressure switch in DOWNFLOW or HORIZONTAL RIGHT applications.

NOTE: See Fig. 14 or tube routing label on main furnace door to check for proper connections.

Relocate tubes as described below.

1. Disconnect collector box pressure tube (pink label) attached to pressure switch.
2. Extend collector box pressure tube (green label) which was previously connected to condensate trap relief port connection by splicing to small diameter tube (factory-supplied in loose parts bag.)
3. Connect collector box pressure tube (green label) to pressure switch connection labeled COLLECTOR BOX.
4. Use remaining small diameter tube (factory-supplied in loose parts bag) to extend collector box pressure tube (pink label) which was previously connected to pressure switch.
5. Route this extended tube (pink label) to condensate trap relief port connection.
6. Determine appropriate Length, cut, and connect tube.
7. Clamp tube to relief port connection.

Condensate Trap Freeze Protection

Refer to condensate Drain Protection section for recommendations and procedures.

Construct a Working Platform

Construct working platform where all required furnace clearances are met. (See Fig. 3 and 12 or 13.)

⚠ CAUTION

UNIT OPERATION HAZARD

Failure to follow this caution may result in intermittent unit operation.

The condensate trap MUST be installed below furnace. See Fig. 6 for dimensions. The drain connection to condensate trap must also be properly sloped to an open drain.

NOTE: A 12-in. (305 mm) minimum offset pipe section is recommended with short (5 to 8 ft. or 1.5M to 2.4M) vent systems. This recommendation is to reduce excessive condensate droplets from exiting the vent pipe. (See Fig. 12, 13, or 44.)

LOCATION

General

This furnace must

- be installed so the electrical components are protected from water.
- not be installed directly on any combustible material other than wood flooring (refer to SAFETY CONSIDERATIONS).
- be located so combustion-air and vent pipe maximum lengths are not exceeded. Refer to Table 7.
- be located where available electric power and gas supplies meet specifications on the furnace rating plate.
- be attached to an air distribution system and be located as close to the center of the distribution system as possible. Refer to Air Ducts section.
- be provided with ample space for servicing and cleaning. Always comply with minimum fire protection clearances shown on the furnace clearance-to-combustibles label. (See Fig. 3.)

This furnace may be located in a confined space without special provisions for dilution or ventilation air.

NOTE: For upflow/downflow applications install furnace so that it is level or pitched and forward within 1/2-in. (13 mm) for proper furnace operation. For horizontal applications pitch 1/4-in. (6 mm) minimum to 1/2-in. (13 mm) maximum forward to ensure proper condensate drainage from secondary heat exchangers. (See Fig. 15.)

When a furnace is installed so that supply ducts carry air circulated by the furnace to areas outside the space containing the furnace, the return air shall also be handled by ducts sealed to furnace casing. The ducts terminate outside the space containing the furnace to ensure there will not be a negative pressure condition within equipment room or space.

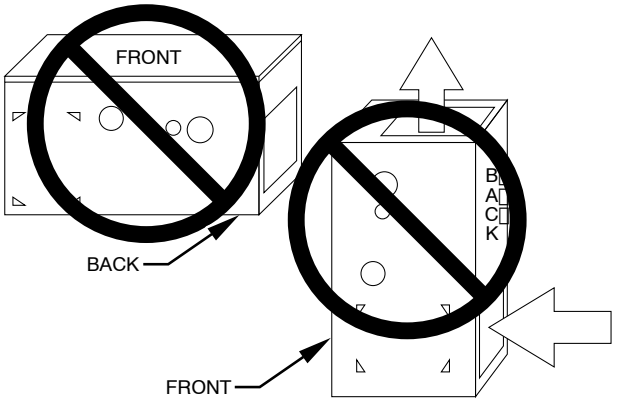

Fig. 16 - Prohibit Installation on Back

⚠ CAUTION

UNIT DAMAGE HAZARD

This gas furnace may be used for construction heat provided that:

-The furnace is permanently installed with all electrical wiring, piping, air filters, venting and ducting installed according to these installation instructions. A return air duct is provided, sealed to the furnace casing, and terminated outside the space containing the furnace. This prevents a negative pressure condition as created by the circulating air blower, causing a flame rollout and/or drawing combustion products into the structure.
-The furnace is controlled by a thermostat. It may not be "hot wired" to provide heat continuously to the structure without thermostatic control.
-Clean outside air is provided for combustion. This is to minimize the corrosive effects of adhesives, sealers and other construction materials. It also prevents the entrainment of drywall dust into combustion air, which can cause fouling and plugging of furnace components.
-The temperature of the return air to the furnace is maintained between 55°F (13°C) and 80°F (27°C), with no evening setback or shutdown. The use of the furnace while the structure is under construction is deemed to be intermittent operation per our installation instructions.
-The air temperature rise is within the rated rise range on the furnace rating plate, and the firing rate has been set to the nameplate value.
-The filters used to clean the circulating air during the construction process must be either changed or thoroughly cleaned prior to occupancy.
-The furnace, ductwork and filters are cleaned as necessary to remove drywall dust and construction debris from all HVAC system components after construction is completed.
-After construction is complete, verify furnace operating conditions including ignition, input rate, temperature rise and venting, according to the manufacturer's instructions.

⚠ WARNING

FIRE OR DEATH HAZARD

Failure to follow this warning could result in property damage, personal injury, or death.

Do **not** install furnace on its back. (See Fig. 16.) Safety control operation will be adversely affected. Never connect return-air ducts to back of furnace.

The furnace and its return air system shall be designed and installed so that negative pressure created by the air circulating fan cannot affect another appliance's combustion air supply or act to mix products of combustion with circulating air, and that the air circulating fan of the furnace, if installed in an enclosure communicating with another fuel-burning appliance not of the direct-vent type, shall be operable only when any door or panel covering an opening in the furnace fan compartment or in a return air plenum on ducts is in the closed position.

⚠ CAUTION

UNIT DAMAGE HAZARD

Failure to follow this caution may result in minor property or unit damage.

If these furnaces are installed in an unconditioned space where ambient temperatures may be 32°F (0°C) or lower, freeze protection measures must be taken. See Condensate Drain Protection section and Fig. 17.

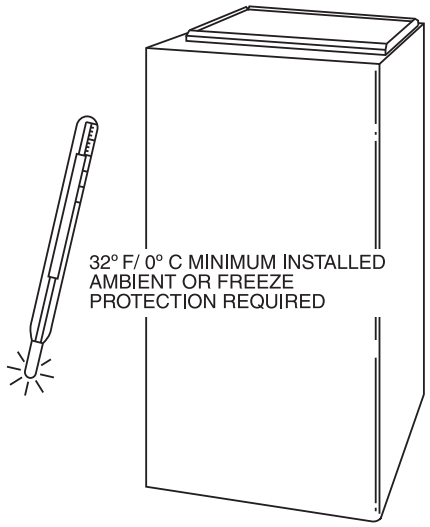

A07911

Fig. 17 - Freeze Protection

Furnace Location Relative to Cooling Equipment

The cooling coil must be installed parallel with or on downstream side of furnace to avoid condensation in heat exchanger. When installed parallel with a furnace, dampers or other means used to control flow of air shall be adequate to prevent chilled air from entering furnace. If dampers are manually operated, they must be equipped with a means to prevent operation of either unit unless damper is in full-heat or full-cool position.

Hazardous Locations

⚠ WARNING

FIRE, EXPLOSION, INJURY OR DEATH HAZARD

Improper location or inadequate protection could result in fire or explosion.

When furnace is installed in a residential garage, it must be installed so that burners and ignition sources are located a minimum of 18 in. (457 mm) above floor. The furnace must be located or protected to avoid physical damage by vehicles. When furnace is installed in a public garage, airplane hangar, or other building having a hazardous atmosphere, unit must be installed in accordance with requirements of National Fire Protection Association, Inc. (See Fig. 5.)

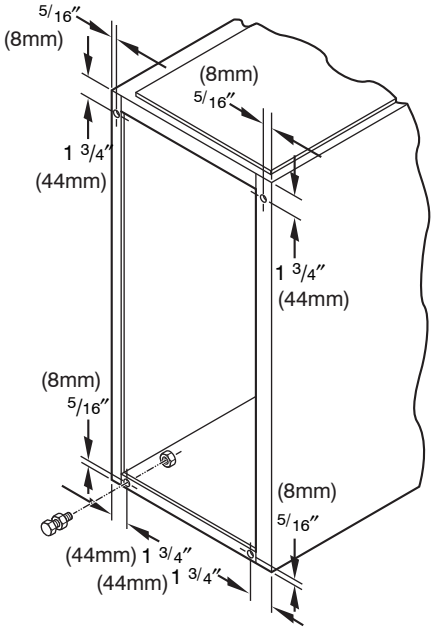

A89014

Fig. 18 - Leveling Legs

INSTALLATION

Leveling Legs (If Desired)

When furnace is used in upflow position with side inlet(s), leveling legs may be desired. (See Fig. 18.) Install field-supplied, corrosion-resistant 5/16-in. (8 mm) machine bolts and nuts.

NOTE: The maximum length of bolt should not exceed 1-1/2 in. (38 mm).

1. Position furnace on its back. Locate and drill a 5/16-in. (8 mm) diameter hole in each bottom corner of furnace. (See Fig. 18.) Holes in bottom closure panel may be used as guide locations.
2. For each hole, install nut on bolt and then install bolt and nut in hole. (Install flat washer if desired.)
3. Install another nut on other side of furnace base. (Install flat washer if desired.)
4. Adjust outside nut to provide desired height, and tighten inside nut to secure arrangement.

NOTE: Bottom closure must be used when leveling legs are used. See Bottom Closure Panel section.

Installation in Upflow or Downflow Applications

NOTE: For downflow applications, this furnace is approved for use on combustible flooring when special base (available from Manufacturer) Part No. KGB is used. Special base is not required when this furnace is installed on Manufacturer's Cased Coil Assembly or when Manufacturer's Coil Box is used.

1. Determine application being installed from Table 1.
2. Construct hole in floor per dimensions specified in Table 1 and Fig. 19.
3. Construct plenum to dimensions specified in Table 2 and Fig. 19.
4. If special base (KGASB) is used, install as shown in Fig. 20.
5. If Manufacturer's Cased Coil Assembly or Manufacturer's Coil Box is used, install as shown in Fig. 21.

NOTE: Remove furnace perforated discharge duct flanges when they interfere with mating flanges on coil on downflow subbase. To remove furnace perforated discharge duct flange, use hand scanners, wide duct pliers or duct flange tool to bend flange back and forth until it breaks off. Be careful of sharp edges. (See Fig. 22.)

⚠ CAUTION

UNIT MAY NOT OPERATE HAZARD

Failure to follow this caution may result in intermittent unit operation or performance satisfaction.

Do not bend duct flanges inward as shown in Fig. 22. This will affect airflow across heat exchangers and may cause limit cycling or premature heat exchanger failure. Remove duct flange completely or bend it inward a minimum of 210 degrees as shown in Fig. 22.

Installation in Horizontal Applications

These furnaces can be installed in either horizontal left or right discharge position. In a crawlspace, furnace can either be hung from floor joist or installed on suitable blocks or pad. Furnace can be suspended from each corner by hanger bolts and angle iron supports. (See Fig. 23.) Cut hanger bolts (4 each 3/8-in. all-thread rod) to desired length. Use 1 X 3/8-in. flat washers, 3/8-in. lock washers, and 3/8-in. nuts on hanger rods as shown in Fig. 23. Dimples are provided for hole locations. (See Fig. 2.)

⚠ CAUTION

UNIT MAY NOT OPERATE HAZARD

Failure to follow this caution may result in intermittent unit operation or performance satisfaction.

The entire length of furnace MUST be supported when furnace is used in a horizontal position to ensure proper draining. When suspended, bottom brace supports sides and center blower shelf. When unit is supported from the ground, blocks or pad should support sides and center blower shelf area.

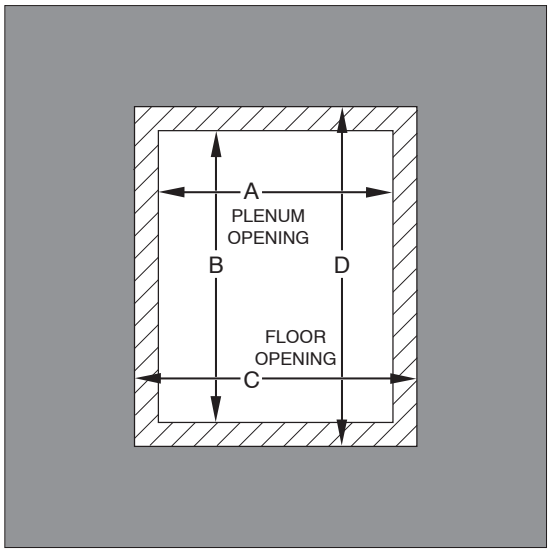

A96283

Fig. 19 - Floor and Plenum Opening Dimensions

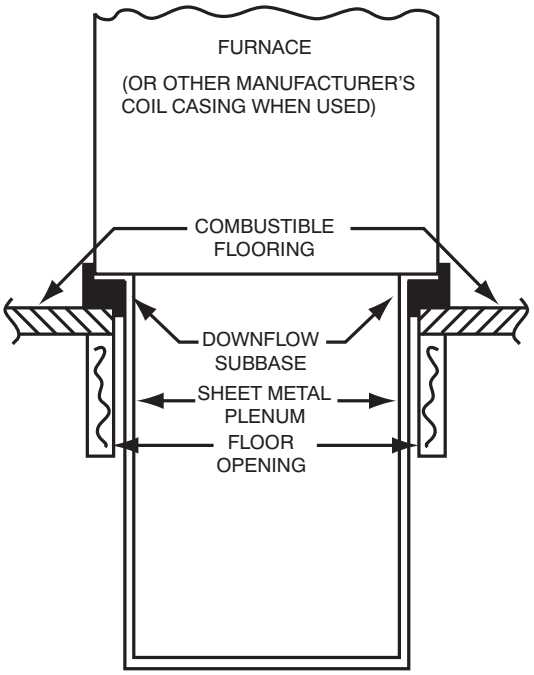

A07585

Fig. 20 - Furnace, Plenum, and Subbase Installed on a Combustible Floor

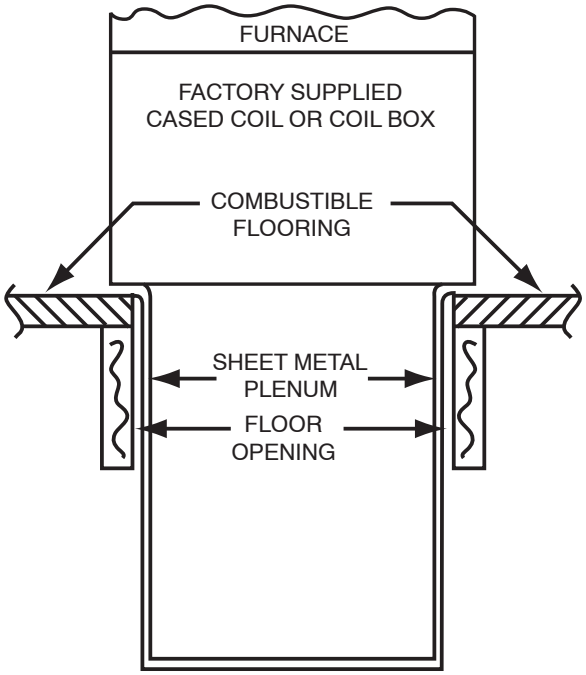

A07586

Fig. 21 - Furnace, Plenum, and Coil Assembly or Coil Box Installed on a Combustible Floor

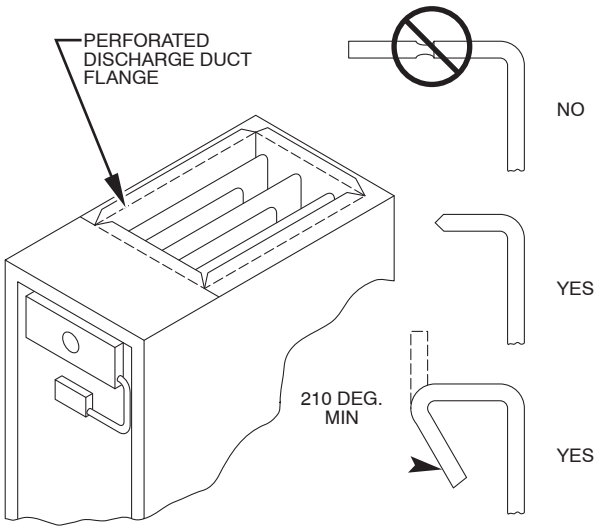

A93029

Fig. 22 - Duct Flanges

355CAV

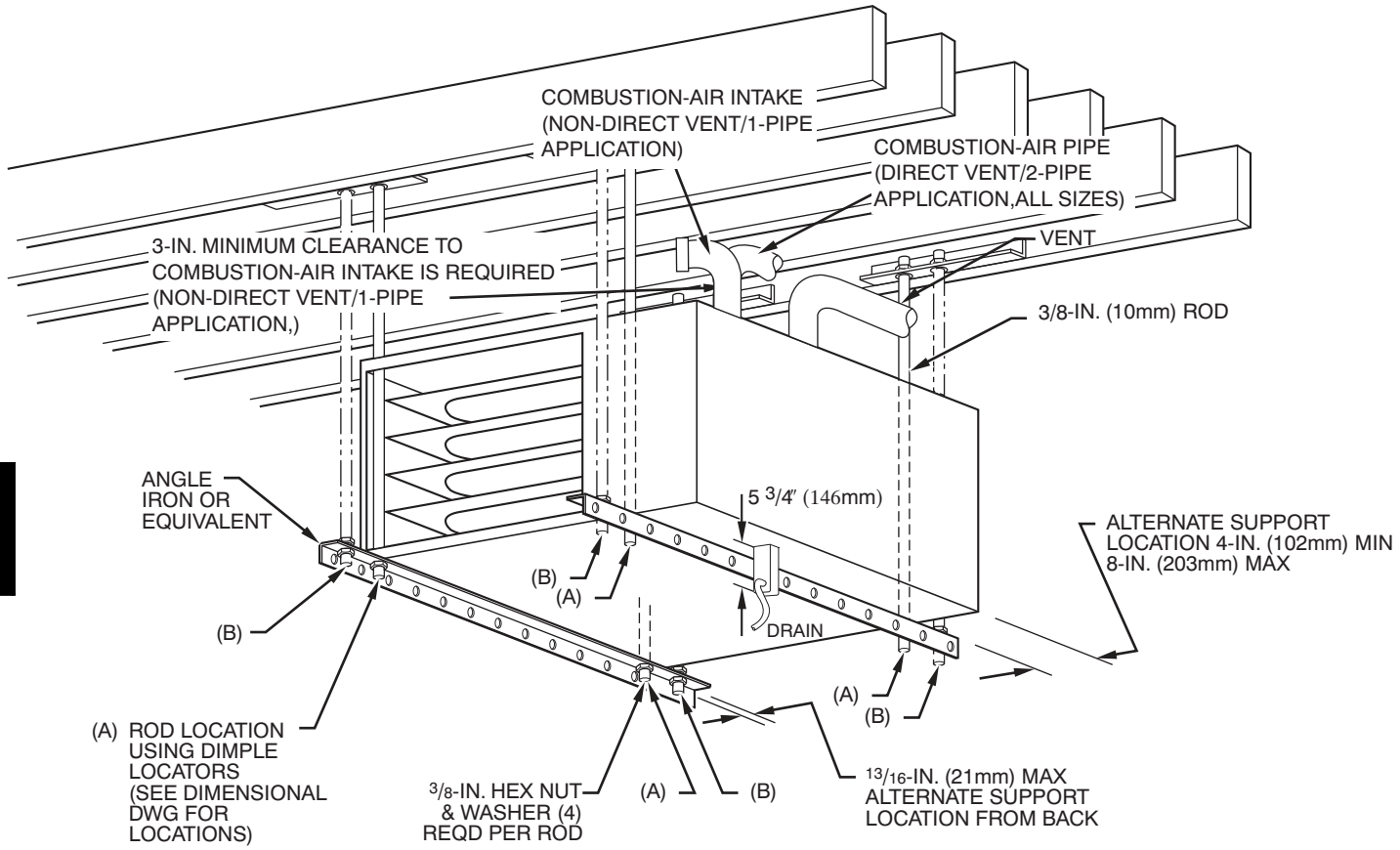

(A) PREFERRED ROD LOCATION

(B) ALTERNATE ROD LOCATION

NOTES:

1. A 1 In. (25mm) clearance minimum between top of furnace and combustible material.

2. The entire length of furnace must be supported when furnace is used in horizontal position to ensure proper drainage.

3. For non-direct vent/1-pipe application, bottom side combustion-air entry cannot be used when furnace is installed with hangers as shown.

A93304

Fig. 23 - Crawlspace Horizontal Application for Direct Vent / 2-Pipe Installation and for Ventilated Combustion Air Installation

Table 1 – Opening Dimensions - In. (mm)

FURNACE CASING WIDTH	APPLICATION (APPROVED FACTORY SUPPLIED CASED COILS AND COIL BOX: CD5, CKR, CAPVP, CARVP, CAPMP, CARMP, CNPVP, CNRVP, AND KCAKC)	PLENUM OPENING		FLOOR OPENING	
		A	B	C	D
17 ½ (445)	Upflow Applications on Combustible or Noncombustible Flooring (KGASB subbase not required)	16 (406)	24–1/8 (613)	16–5/8 (422)	24–3/4 (629)
	Downflow Applications on Noncombustible Flooring (KGASB subbase not required)	15–7/8 (403)	19 (483)	16–1/2 (419)	19–5/8 (498)
	Downflow applications on combustible flooring **(KGASB sub-base** required)	15–1/8 (384)	19 (483)	16–3/4 (425)	20–3/8 (518)
	Downflow Applications on Combustible Flooring with Factory supplied cased coil or Factory supplied coil box (KGASB subbase not required)	15–1/2 (394)	19 (483)	16–1/2 (419)	20 (508)
21 (533)	Upflow Applications on Combustible or Noncombustible Flooring (KGASB subbase not required)	19–1/2 (495)	24–1/8 (613)	20–1/8 (511)	24–3/4 (629)
	Downflow Applications on Noncombustible Flooring (KGASB subbase not required)	19–3/8 (492)	19 (483)	20 (508)	19–5/8 (498)
	Downflow applications on combustible flooring **(KGASB sub-base** required)	18–5/8 (473)	19 (483)	20–1/4 (514)	20–3/8 (518)
	Downflow Applications on Combustible Flooring with Factory supplied cased coil or Factory supplied coil box (KGASB subbase not required)	19 (483)	19 (483)	20 (508)	20 (508)
24–1/2 (622)	Upflow Applications on Combustible or Noncombustible Flooring (KGASB subbase not required)	23 (584)	24–1/8 (613)	23–5/8 (600)	24–3/4 (629)
	Downflow Applications on Noncombustible Flooring (KGASB subbase not required)	22–7/8 (581)	19 (483)	23–1/2 (597)	19–5/8 (498)
	Downflow applications on Combustible flooring **(KGASB subbase** required)	22–1/8 (562)	19 (483)	23–3/4 (603)	20–3/8 (518)
	Downflow Applications on Combustible Flooring with Factory supplied cased coil or Factory supplied coil box (KGASB subbase not required)	22–1/2 (572)	19 (483)	23–1/2 (597)	20 (508)

AIR DUCTS

General Requirements

The duct system should be designed and sized according to accepted national standards such as those published by: Air Conditioning Contractors Association (ACCA), Sheet Metal and Air Conditioning Contractors National Association (SMACNA) or American Society of Heating, Refrigerating and Air Conditioning Engineers (ASHRAE) or consult *The Air Systems Design Guidelines* reference tables available from your local distributor. The duct system should be sized to handle the required system design CFM at the design static pressure.

When a furnace is installed so that the supply ducts carry air circulated by the furnace to areas outside the space containing the furnace, the return air must also be handled by a duct(s) sealed to the furnace casing and terminating outside the space containing the furnace.

Secure ductwork with proper fasteners for type of ductwork used. Seal supply- and return-duct connections to furnace with code approved tape or duct sealer.

Flexible connections should be used between ductwork and furnace to prevent transmission of vibration. Ductwork passing through unconditioned space should be insulated to enhance system performance. When air conditioning is used, a vapor barrier is recommended.

Maintain a 1-in. (25 mm) clearance from combustible materials to supply air ductwork for a distance of 36 in. (914 mm) horizontally from the furnace. See NFPA 90B or local code for further requirements.

For a furnace not equipped with a cooling coil, the outlet duct shall be provided with a removable access panel. This opening shall be accessible when the furnace is installed and shall be of such a size that the heat exchanger can be viewed for possible openings using light assistance or a probe can be inserted for sampling the air stream. The cover attachment shall prevent leaks.

Ductwork Acoustical Treatment

Metal duct systems that do not have a 90 degree elbow and 10 ft. (3M) of main duct to the first branch take-off may require internal acoustical lining. As an alternative, fibrous ductwork may be used if constructed and installed in accordance with the latest edition of SMACNA construction standard on fibrous glass ducts. Both acoustical lining and fibrous ductwork shall comply with NFPA 90B as tested by UL Standard 181 for Class 1 Rigid air ducts.

Supply Air Connections

Upflow Furnaces

Connect supply-air duct to 3/4-in. (19 mm)flange on furnace supply-air outlet. The supply-air duct attachment must ONLY be connected to furnace supply-/outlet-air duct flanges or air conditioning coil casing (when used). DO NOT cut main furnace casing to attach supply side air duct, humidifier, or other accessories. All accessories MUST be connected external to furnace main casing.

Downflow Furnaces

Connect supply-air duct to supply-air opening on furnace. The supply-air duct attachment must ONLY be connected to furnace supply/outlet or air conditioning coil casing (when used) when installed on non-combustible material When installed on combustible material, supply air duct attachment must ONLY be connected to an accessory subbase or factory approved air conditioning coil casing. DO NOT cut main furnace casing to attach supply side air duct, humidifier, or other accessories. All accessories MUST be connected external to furnace main casing. Supply air opening duct flanges must be modified per Fig. 22.

Horizontal Furnaces

Connect supply-air duct to supply-air opening on furnace. The supply-air duct attachment must ONLY be connected to furnace supply/outlet or air conditioning coil casing (when used). DO NOT cut main furnace casing to attach supply side air duct, humidifier,

or other accessories. All accessories MUST be connected external to furnace main casing.

Return Air Connections

⚠ WARNING

FIRE HAZARD

Failure to follow this warning could result in personal injury, death or property damage.

Never connect return-air ducts to the back of the furnace. Return air duct connections on furnace side(s) permitted in upflow applications only.

Upflow Furnaces

The return-air duct must be connected to bottom, sides (left or right), or a combination of bottom and side(s) of main furnace casing. Bypass humidifier may be attached into unused side return air portion of the furnace casing. DO NOT connect any portion of return-air duct to back of furnace casing.

Downflow and Horizontal Furnaces

The return-air duct must be connected to return-air opening provided. DO NOT cut into casing sides or back to attach any portion of return-air duct. Bypass humidifier connections should be made at ductwork or coil casing sides exterior to furnace.

Filter Arrangement

⚠ WARNING

FIRE, CARBON MONOXIDE AND POISONING HAZARD

Failure to follow this warning could result in personal injury, death or property damage.

Never operate unit without a filter or with filter access door removed.

The air filter arrangement will vary due to application, furnace orientation and filter type. The filter may be installed in an external Filter/Media cabinet (if provided) or the furnace blower compartment. Factory supplied washable filters are shipped in the blower compartment.

If a factory-supplied external Filter/Media cabinet is provided, instructions for its application, assembly, and installation are packaged with the cabinet. The Filter/Media cabinet can be used with the factory-supplied washable filter or a factory-specified high-efficiency disposable filter (see cabinet instructions).

If installing the filter in the furnace blower compartment, determine location for filter and relocate filter retaining wire, if necessary. See Table 2 to determine correct filter size for desired filter location. Table 2 indicates filter size, location, and quantity shipped with this furnace. See Fig. 2 for location and size of bottom and side return-air openings.

⚠ CAUTION

CUT HAZARD

Failure to follow this caution may result in personal injury.

Use care when cutting support rods in filters to protect against flying pieces and sharp rod ends. Wear safety glasses, gloves, and appropriate protective clothing.

⚠ CAUTION

UNIT MAY NOT OPERATE

Failure to follow this caution may result in intermittent unit operation or performance satisfaction.

For airflow requirements above 1800 CFM, see Air Delivery table in Product Data literature for specific use of single side inlets. The use of both side inlets, a combination of one side and the bottom, or the bottom only will ensure adequate return air openings for airflow requirements above 1800 CFM.

Table 2 – Filter Information - In. (mm)

AIR FILTER LOCATED IN BLOWER COMPARTMENT			
Furnace Casing Width	Filter Size		Filter Type Framed
	Side Return	Bottom Return*	
17–1/2 (445)	(1) 16 x 25 x 3/4 † (406 x 635 x 19)	(1) 16 x 25 x 3/4† (406 x 635 x 19)	Washable
21 (533)	(1) 16 x 25 x 3/4* (406 x 635 x 19)	(1) 20 x 25 x 3/4† (508 x 635 x 19)	Washable
24–1/2 (622)	(1 or 2) 16 x 25 x 3/4* (406 x 635 x 19)	(1) 24 x 25 x 3/4† (610 x 635 x 19)	Washable

* Filters may be field modified by cutting filter material and support rods (3) in filters. Alternate sizes can be ordered from your distributor or dealer

† Factory–provided with the furnace

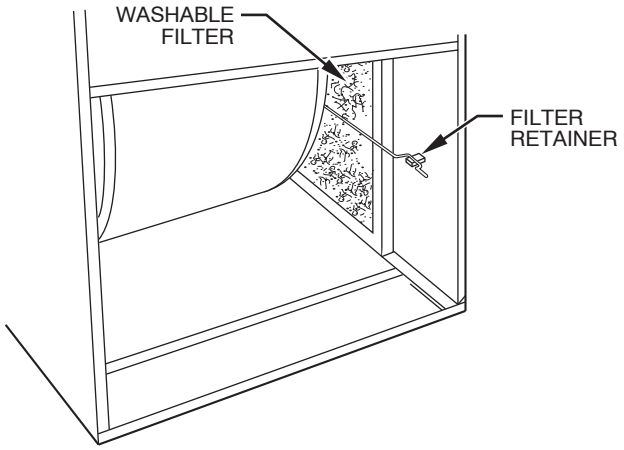

Fig. 24 - Filter Installed for Side Inlet

NOTE: Side return-air openings can ONLY be used in Upflow configurations. Install filter(s) as shown in Fig. 24.

For bottom return-air applications, filter may need to be cut to fit some furnace widths. Install filter as shown in Fig. 25.

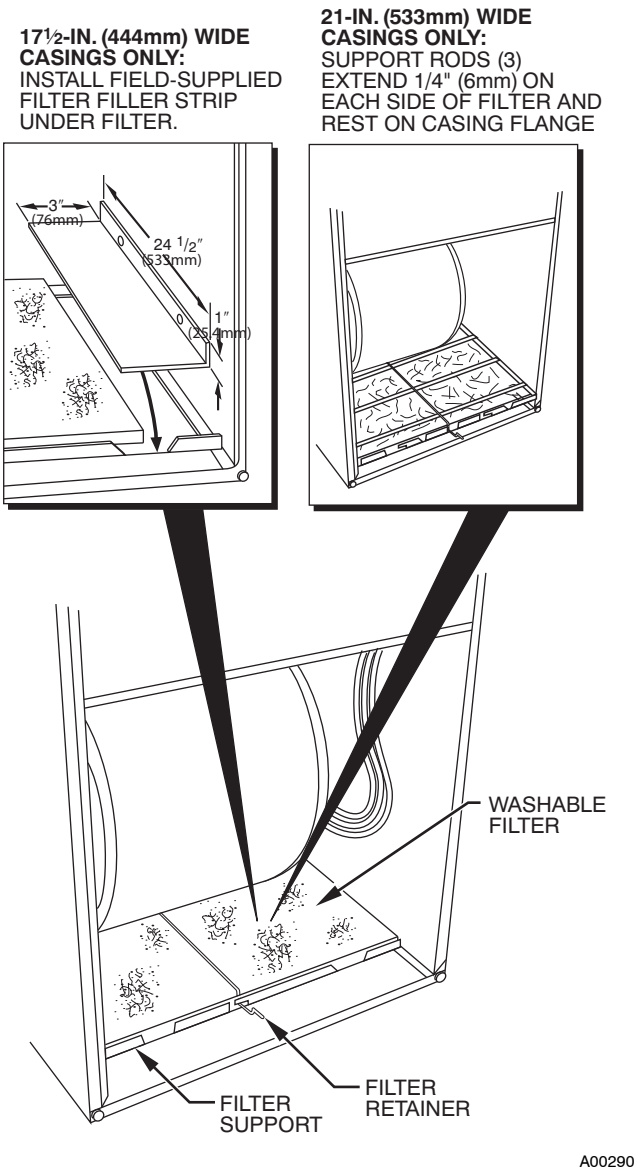

Fig. 25 - Bottom Filter Arrangement

NOTE: Remove and discard bottom closure panel when bottom inlet is used.

Bottom Closure Panel

These furnaces are shipped with bottom closure panel installed in bottom return-air opening. This panel MUST be in place when side return air is used.

To remove bottom closure panel, perform following:

1. Tilt or raise furnace and remove two screws holding front filler panel. (See Fig. 26.)
2. Rotate front filler panel downward to release holding tabs.
3. Remove bottom closure panel.
4. Reinstall front filler panel and screws.

Gas Piping

Gas piping must be installed in accordance with national and local codes. Refer to NFGC in the U.S. Canadian installations must be made in accordance with CAN/CSA-B149.1-05 and all authorities having jurisdiction. Gas supply line should be a separate line running directly from meter to furnace, if possible. Refer to Table 3 for recommended gas pipe sizing. Risers must be used to connect to furnace and to meter. Support all gas piping with appropriate straps, hangers, etc. Use a minimum of one hanger every 6 ft. (1.8M). Joint compound (pipe dope) should be applied sparingly and only to male threads of joints. Pipe dope must be resistant to propane gas.

⚠ WARNING

FIRE OR EXPLOSION HAZARD

Failure to follow this warning could result in personal injury, death, or property damage.

- Connect gas pipe to furnace using a backup wrench to avoid damaging gas controls.
- Gas valve shutoff switch MUST be facing forward or tilted upward.
- Never purge a gas line into a combustion chamber. Never test for gas leaks with an open flame. Use a commercially available soap solution made specifically for the detection of leaks to check all connections.
- Use proper length of pipe to avoid stress on gas control manifold.
- If a flexible connector is required or allowed by authority having jurisdiction, black iron pipe shall be installed at furnace gas valve and extend a minimum of 2 in. (51 mm) outside furnace casing.
- Protect gas valve from water and debris. Gas valve inlet and/or inlet piping must remain capped until gas supply line is permanently installed to protect the valve from moisture and debris. Also, install a sediment trap in the gas supply piping at the inlet to the gas valve.

Install a sediment trap in riser leading to furnace. Trap can be installed by connecting a tee to riser leading to furnace so straight-through section of tee is vertical. Then connect a capped nipple into lower end of tee. Capped nipple should extend below level of gas controls. Place a ground joint union between gas control manifold and manual gas shutoff valve. (See Fig. 27.)

An accessible manual shutoff valve MUST be installed external to furnace casing and within 6 ft. (1.8M) of furnace. A 1/8-in. NPT (3 mm) plugged tapping, accessible for test gauge connection, MUST be installed immediately upstream of gas supply connection to furnace and downstream of manual shutoff valve.

Gas line grommet (factory-supplied loose parts bag) should be used when installing gas piping. Gas line entry hole filler plug should be installed in unused gas line entry hole. (See Fig. 28.)

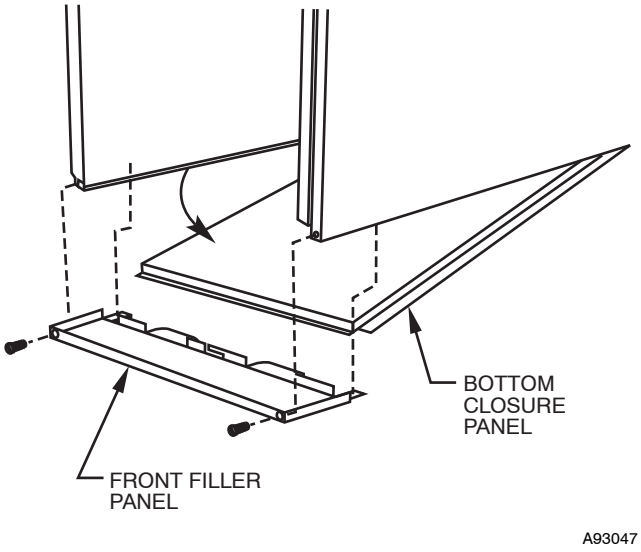

Fig. 26 - Removing Bottom Closure Panel

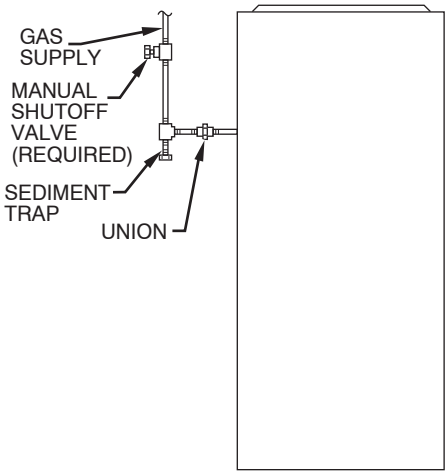

A93324

Fig. 27 - Typical Gas Pipe Arrangement

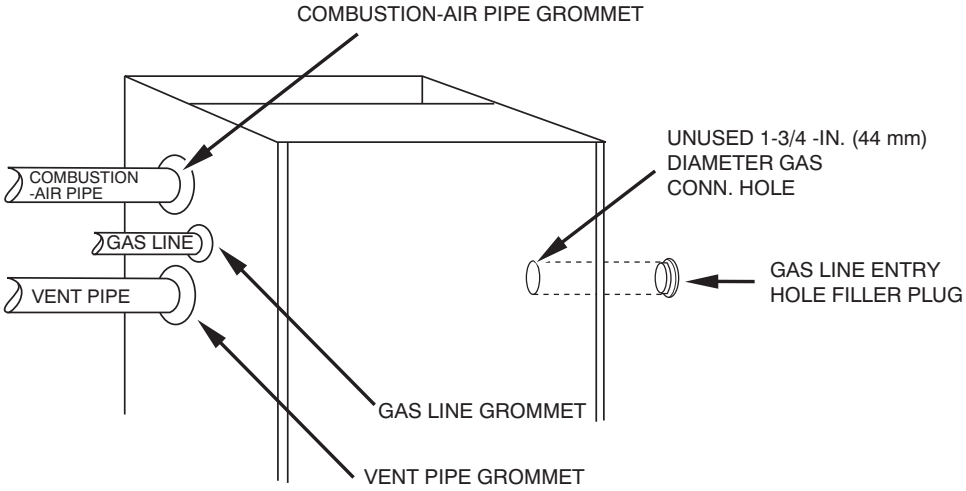

NOTE: PIPE GROMMETS AND ENTRY HOLE FILLER PLUGS ARE INCLUDED IN FACTORY-SUPPLIED LOOSE PARTS BAG

A05057

Fig. 28 - Casing Pipe Grommets

Table 3 – Maximum Capacity of Pipe*

NOMINAL IRON PIPE SIZE IN. (MM)	INTERNAL DIA. IN. (MM)	LENGTH OF PIPE – FT (M)				
		10 (3.0)	20 (6.0)	30 (9.1)	40 (12.1)	50 (15.2)
1/2 (13)	0.622 (158)	175	120	97	82	73
3/4 (19)	0.824 (21)	360	250	200	170	151
1 (25)	1.049 (27)	680	465	375	320	285
1-1/4 (32)	1.380 (35)	1400	950	770	660	580
1-1/2 (38)	1.610 (41)	2100	1460	1180	990	900

* Cubic ft. of gas per hr for gas pressure of 0.5 psig (14–in. wc) or less, and a pressure drop of 0.5–in. wc (based on a 0.60 specific gravity gas). Ref: Table 9–2 NFPA 54–2002.

NOTE: The gas valve inlet pressure tap connection is suitable to use as test gauge connection providing test pressure DOES NOT exceed maximum 0.5 psig (14-in. wc) stated on gas valve. (See Fig. 60.)

Piping should be pressure and leak tested in accordance with NFGC in the United States or CAN/CSA-B149.1-05 in Canada, local, and national plumbing and gas codes before the furnace has been connected. If pressure exceeds 0.5 psig (14-in. wc), gas supply pipe must be disconnected from furnace and capped before pressure test.

If test pressure is equal to or less than 0.5 psig (14-in. wc), turn off electric shutoff switch located on gas valve before test. It is recommended that ground joint union be loosened before pressure testing. After all connections have been made, purge lines and check for leakage at furnace prior to placing it into service.

The gas supply pressure shall be within the maximum (13.6-in. wc) and minimum (4.5-in. wc) inlet supply pressures marked on the rating plate with the furnace burners ON at HI-HEAT and OFF.

Electrical Connections

See Fig. 29 for field wiring diagram showing typical field 115-v and 24-v wiring. Check all factory and field electrical connections for tightness.

⚠ WARNING

ELECTRICAL SHOCK HAZARD

Failure to follow this warning could result in personal injury or death.

Blower access door switch opens 115-v power to furnace control. No component operation can occur. Do not bypass or close switch with panel removed.

⚠ WARNING

UNIT MAY NOT OPERATE

Failure to follow this caution may result in intermittent unit operation.

Furnace control must be grounded for proper operation or control will lock out. Control is grounded through green/yellow wire connected to gas valve and burner box screw.

115-v Wiring

Before proceeding with electrical connections, make certain that voltage, frequency, and phase correspond to that specified on furnace rating plate. Also, check to be sure that service provided by power supply is sufficient to handle load imposed by this equipment. Refer to rating plate or Table 4 for equipment electrical specifications.

Make all electrical connections in accordance with National Electrical Code (NEC) ANSI/NFPA 70-2008 and any local codes or ordinances that might apply. For Canadian installations, all electrical connections must be made in accordance with Canadian Electrical Code CSA C22.1 or authorities having jurisdiction.

Field-supplied wiring shall conform with the limitations of 63°F (33°C) rise.

The furnace must be electrically grounded in accordance with local codes; or in the absence of local codes, with the National Electric Code ANSI/NFPA 70 and/or the Canadian Electric Code, CSA C22.1, Part I, if an external electrical source is utilized.

Use a separate branch electrical circuit containing a properly sized fuse or circuit breaker for this furnace. See Table 4 for wire size and fuse specifications. A disconnecting means must be located within sight from and readily accessible to furnace.

NOTE: Proper polarity must be maintained for 115-v wiring. If polarity is incorrect or furnace is not grounded properly, furnace control status code indicator light will flash rapidly and furnace will NOT operate.

⚠ WARNING

FIRE HAZARD

Failure to follow this warning could result in personal injury, death, or property damage.

Do not connect aluminum wire between disconnect switch and furnace. Use only copper wire. (See Fig. 30.)

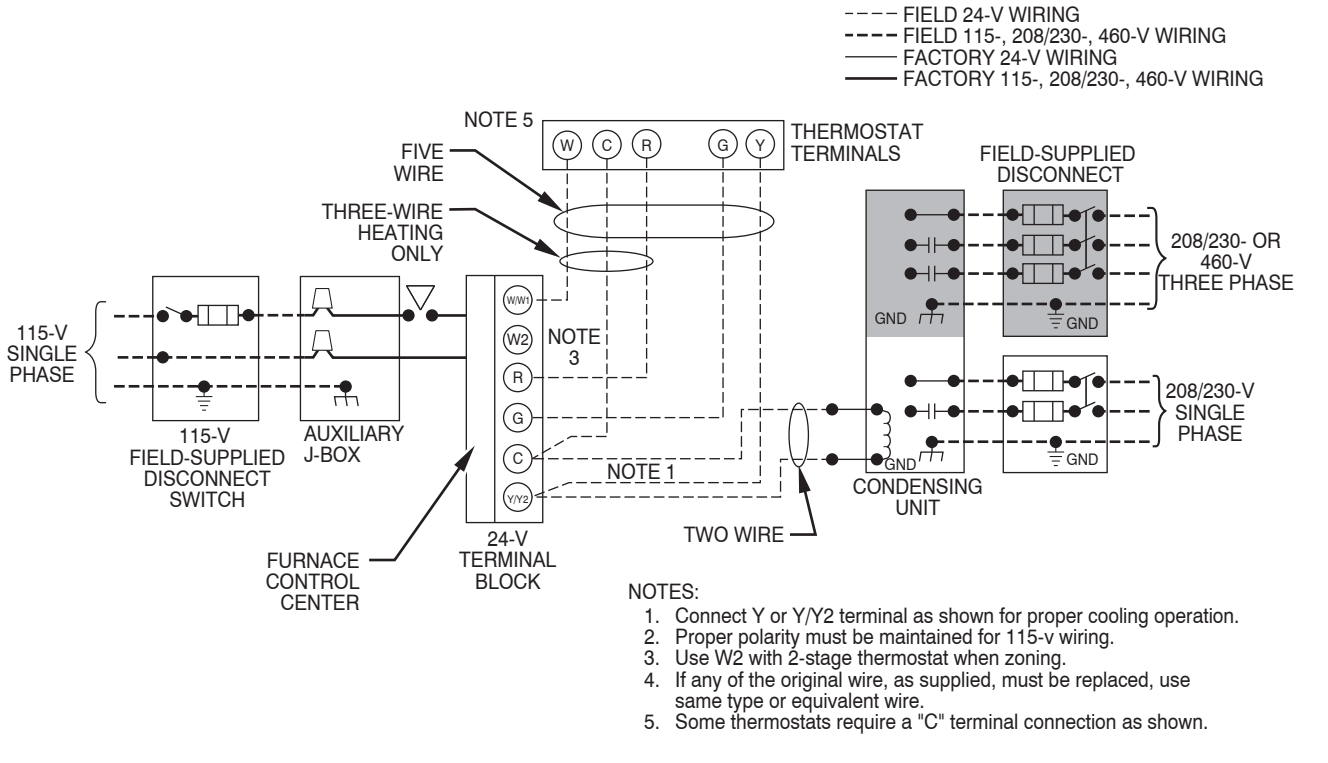

Fig. 29 - Heating and Cooling Application Wiring Diagram

Table 4 – Electrical Data

UNIT SIZE	VOLTS–HERTZ–PHASE	OPERATING VOLTAGE RANGE		MAXIMUM UNIT AMPS	MINIMUM WIRE SIZE	MAXIMUM WIRE LENGTH FT (M)‡	MAXIMUM FUSE OR CKT BKR AMPS**
		Maximum*	Minimum*				
060–14/042060	115–60–1	127	104	8.96	14	30 (9.1)	15
080–14/042080	115–60–1	127	104	8.96	14	30 (9.1)	15
080–20/060080	115–60–1	127	104	14.06	12	31 (9.4)	20
100–20/060100	115–60–1	127	104	14.06	12	31 (9.4)	20
120–20/060120	115–60–1	127	104	14.06	12	31 (9.4)	20

* Permissible limits of voltage range at which unit will operate satisfactorily.

† Unit ampacity = 125 percent of largest operating component's full load amps plus 100 percent of all other potential operating components' (EAC, humidifier, etc.) full load amps.

‡ Length shown is as measured 1 way along wire path between unit and service panel for maximum 2 percent voltage drop.

** Time–delay type is recommended.

⚠ WARNING

ELECTRICAL SHOCK AND FIRE HAZARD

Failure to follow this warning could result in electrical shock, fire, or death.

The cabinet MUST have an uninterrupted or unbroken ground according to NEC ANSI/NFPA 70-2008 and Canadian Electrical Code CSA C22.1 or local codes to minimize personal injury if an electrical fault should occur. This may consist of electrical wire or conduit approved for electrical ground when installed in accordance with existing electrical codes. Do not use gas piping as an electrical ground.

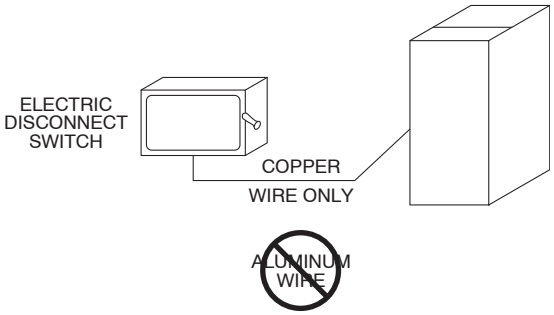

Fig. 30 - Disconnect Switch and Furnace

Install power entry hole filler plugs (factory-supplied in loose parts bag) in unused power entry holes. (See Fig. 31.)

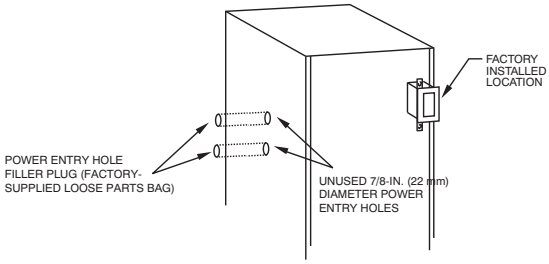

Fig. 31 - Factory Installed J-Box Location

J-Box Relocation

1. Remove two screws holding auxiliary J-box. (See Fig. 32.)
2. Rotate J-box 180° and attach box to left side, using holes provided.

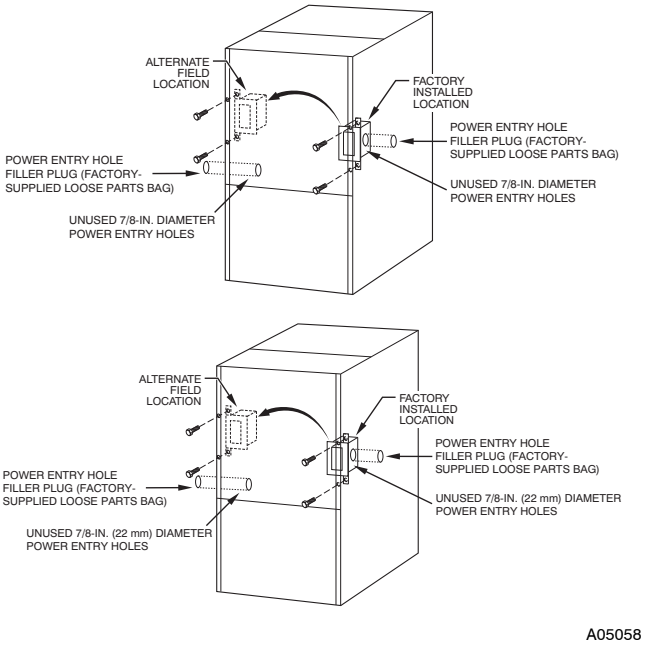

Fig. 32 - J-Box Relocation

3. Install power entry hole filler plugs (factory-supplied loose parts bag) in unused power entry holes. (See Fig. 31.)

⚠ WARNING

FIRE OR ELECTRICAL SHOCK HAZARD

Failure to follow this warning could result in personal injury, death, or property damage.

If manual disconnect switch is to be mounted on furnace, select a location where a drill or fastener will not contact electrical or gas components.

NOTE: If modulating dampers are used, blower motor automatically compensates for modulating dampers. If manual disconnect switch is to be mounted on furnace, select a location where a drill or fastener will not contact electrical or gas components.

24-v wiring

Make field 24-v thermostat connections at 24-v terminal block on furnace control. Y wire from thermostat MUST be connected to Y/Y2 terminal on control, as shown in Fig. 19, for proper cooling operation. The 24-v terminal block is marked for easy connection of field wiring. (See Fig. 33.) The 24-v circuit contains a 3-amp, automotive-type fuse located on furnace control. (See Fig. 33.)

Any electrical shorts of 24-v wiring during installation, service, or maintenance may cause fuse to blow. If fuse replacement is required, use only a fuse of identical size (3 amp) and type. The furnace control will flash status code 24 when fuse needs replacement.

NOTE: Use AWG No. 18 color-coded copper thermostat wire for lengths up to 100 ft. (30.4M). For wire lengths over 100 ft., (30.4M) use AWG No. 16 wire.

NOTE: For additional thermostat connection diagrams, reference Fig. 52-59.

Accessories

1. Electronic Air Cleaner (EAC)
   The furnace control EAC terminals are energized with 115v (1.0-amp maximum) during blower operation.
   Connect an accessory Electronic Air Cleaner (if used) using 1/4-in. female quick connect terminals to the two male 1/4-in. quick-connect terminals on the control board marked EAC-1 and EAC-2. The terminals are rated for 115VAC, 1.0 amps maximum and are energized during blower motor operation. (See Fig. 33.)

NOTE: Low stage airflow may slightly increase the trace amount of ozone created by an electronic air cleaner. Individual sensitivity levels to ozone, along with other operating characteristics of electronic air cleaners may affect the amount noticed by an individual. Refer to the air cleaner manufacturer's installation instructions for more information regarding ozone and ozone reduction methods available for your air cleaner.

⚠ CAUTION

UNIT DAMAGE HAZARD

Failure to follow this caution may result in unit component damage.

DO NOT connect furnace control HUM terminal to HUM (humidifier) terminal on Thermidistat™, Zone Controller or similar device. See Thermidistat™, Zone Controller, thermostat, or controller manufacturer's instructions for proper connection.

2. Humidifier (HUM)
   Connect an accessory 24 VAC, 0.5 amp maximum humidifier (if used) to the 1/4-in. male quick-connect HUM terminal and COM-24V screw terminal on the control board thermostat strip. The HUM terminal is energized when blower is energized in heating. (See Fig. 33.)

Removal of Existing Furnaces from Common Vent Systems

When an existing Category I furnace is removed or replaced, the original venting system may no longer be sized to properly vent the remaining attached appliances. An improperly sized Category I venting system could cause the formation of condensate in the furnace and vent, leakage of condensate and combustion products, spillage of combustion products into the living space, etc.

AIR FOR COMBUSTION AND VENTILATION

⚠ CAUTION

FURNACE RELIABILITY HAZARD

Failure to follow this caution may result in premature component failure.

This furnace can be vented as either a direct vent (2-pipe) furnace or as an optional ventilated combustion air application. A direct vent system shall be installed in accordance with the direct vent (2- pipe) procedures in the Combustion Air and Vent Pipe Systems section within this supplemental instruction. For optional ventilated combustion air applications, refer to the ventilated combustion air option procedures in the same section. Application of this furnace should be indoors with special attention given to vent sizing and material, gas input rate, air temperature rise, unit leveling, and unit sizing.

Combustion-Air and Vent Pipe Systems

For additional venting information contact www.Bryant.com.

General

Vent system or vent connectors of other appliances may need to be re-sized. For any other appliances when resizing vent systems or vent connectors, system or connector must be sized to approach minimum size as determined using appropriate table found in the NFGC or CAN/CSA-B149.1-05.

The 355CAV furnaces can be vented as either a direct vent furnace or as an optional ventilated combustion air application. A direct vent system shall be installed in accordance with the direct vent (2-pipe) procedures in the following Combustion Air and Vent Pipe Systems section. For optional ventilated combustion air applications, refer to the ventilated combustion air option procedures in the same section. Common venting prohibited.

Direct Vent / 2-Pipe System

In a direct-vent (2-pipe) system, all air for combustion is taken directly from outdoor atmosphere, and all flue products are discharged to outdoor atmosphere. Combustion-air and vent pipes must terminate together in the same atmospheric pressure zone, either through the roof or a sidewall (roof termination preferred). A factory accessory vent termination kit MUST be used in a direct vent (2-pipe) system. See Fig. 34 for required clearances.

Ventilated Combustion Air Option Materials

In a ventilated combustion air option, the vent terminates and discharges the flue products directly to the outdoors similar to a direct vent system. See Fig. 35 for required clearances. All air for combustion is piped directly to the furnace from a space that is well ventilated with outdoor air (such as an attic or crawl space) and the space is well isolated from the living space or garage.

Materials

Combustion-air and vent pipe, fittings, primers, and solvents must conform to American National Standards Institute (ANSI) standards and American Society for Testing and Materials (ASTM) standards. See Table 5 for approved materials for use in the USA.

⚠ WARNING

FIRE AND EXPLOSION HAZARD

Failure to follow this warning could result in personal injury, death, or property damage.

Solvent cements are combustible. Keep away from heat, sparks, and open flame. Use only in well ventilated areas. Avoid breathing in vapor or allowing contact with skin or eyes.

In Canada, construct all combustion-air and vent pipes for this unit of CSA or ULC listed schedule-40 PVC, PVC-DWV or ABSDWV pipe and pipe cement. SDR pipe is NOT approved in Canada.

⚠ WARNING

CARBON MONOXIDE POISONING HAZARD

Failure to follow this warning could result in personal injury, death, or property damage.

All combustion-air and vent pipes must be airtight and watertight. Pipes must also terminate exactly as shown in Fig. 36 for direct vent (2-pipe) system or Fig. 37 for ventilated combustion air option.

An abandoned masonry chimney may be used as a raceway for properly insulated and supported combustion-air (when applicable) and vent pipes. Each furnace must have its own set of combustion-air and vent pipes and be terminated individually, as shown in Fig. 36 for Direct Vent (2-Pipe) system or Fig. 37 for ventilated combustion air option.

A furnace shall not be connected to a chimney flue serving a separate appliance designed to burn solid fuel.

Other gas appliances with their own venting system may also use the abandoned chimney as a raceway providing it is permitted by local code, the current edition of the National Fuel Gas Code and the vent or liner manufacturer's installation instructions. Care must be taken to prevent the exhaust gases from one appliance from contaminating the combustion air of other gas appliances. Do not take combustion air from inside the chimney when using the Ventilated Combustion Air option.

⚠ CAUTION

UNIT MAY NOT OPERATE HAZARD

Failure to follow this caution may result in intermittent unit operation.

When vent pipe is exposed to temperatures below freezing, such as when it passes through an unheated space or when a chimney is used as a raceway, pipe must be insulated as shown in Table 6 with Armaflex-type insulation.

Furnace combustion air and vent pipe connections are sized for 2-in. pipe. Any pipe size change should be made outside furnace casing in vertical pipe. The transition has to be made as close to the furnace as reasonably possible. (See Fig. 38.)

Table 5 – Approved Combustion-Air and Vent Pipe, Fitting and Cement Materials

ASTM SPECIFICATION (MARKED ON MATERIAL)	MATERIAL	PIPE	FITTINGS	SOLVENT CEMENT AND PRIMERS	DESCRIPTION
D1527	ABS	Pipe	—	—	Schedule40
D1785	PVC	Pipe	—	—	Schedule40
D2235	For ABS	—	—	Solvent Cement	For ABS
D2241	PVC	Pipe	—	—	SDR21 & SDR26
D2466	PVC	—	Fittings	—	Schedule40
D2468	ABS	—	Fittings	—	Schedule40
D2564	For PVC	—	—	Solvent Cement	For PVC
D2661	ABS	Pipe	Fittings	—	DWV at Schedule40 IPS sizes
D2665	PVC	Pipe	Fittings	—	DWV
F438	CPVC	—	Fittings	—	Schedule40
F441	CPVC	Pipe	—	—	Schedule40
F442	CPVC	Pipe	—	—	SDR
F493	For CPVC	—	—	Solvent Cement	For CPVC
F628	ABS	Pipe	—	—	Cellular Core DWV at Schedule40 IPS sizes
F656	For PVC	—	—	Primer	For PVC
F891	PVC	Pipe	—	—	Cellular Core Schedule 40 & DWV

Installation Guidelines for Combustion Air Pipe and Vent Pipe

It is recommended that all pipes be cut, prepared, and preassembled before permanently cementing any joint.

1. Attach combustion air pipe and vent pipe per instructions in sections “Combustion Air Pipe” and “Vent Pipe.”
2. Working from furnace to outside, cut pipe to required length(s).
3. Deburr inside and outside of pipe.
4. Chamfer outside edge of pipe for better distribution of primer and cement.
5. Clean and dry all surfaces to be joined.
6. Check dry fit of pipe and mark insertion depth on pipe.
7. After pipes have been cut and preassembled, apply generous layer of cement primer to pipe fitting socket and end of pipe to insertion mark. Quickly apply approved cement to end of pipe and fitting socket (over primer). Apply cement in a light, uniform coat on inside of socket to prevent buildup of excess cement. Apply second coat.
8. While cement is still wet, twist pipe into socket with 1/4 turn. Be sure pipe is fully inserted into fitting socket.
9. Wipe excess cement from joint. A continuous bead of cement will be visible around perimeter of a properly made joint.
10. Handle pipe joints carefully until cement sets.
11. Horizontal portions of the venting system shall be supported to prevent sagging. Support combustion air piping and vent piping a minimum of every 5 ft. (1.5M)(3 ft. (.91M) for SDR-21 or -26 PVC) using perforated metal hanging strap.
12. Slope combustion air piping and vent piping downward towards furnace a minimum of 1/4-in. per linear ft. with no sags between hangers.
13. Horizontal portions of the venting system shall be installed so as to prevent the accumulation of condensate.
14. Use appropriate methods to seal openings where combustion air pipe and vent pipe pass through roof or sidewall.

Combustion-Air and Vent Pipe Diameter

Determine combustion-air and vent pipe diameter.

1. Using Table 7, individually determine the diameter of the combustion-air and vent pipe allowed. If different, pick the larger of these two diameters and use this diameter for both combustion-air and vent pipes.
2. When installing vent systems of short pipe length, use the smallest allowable pipe diameter. Do not use pipe size greater than required or incomplete combustion, flame disturbance, or flame sense lockout may occur.

NOTE: Do not count elbows or pipe sections in terminations or within furnace.

NOTE: A 2-in. diameter pipe must be used within furnace casing. Make all pipe diameter transitions outside furnace casing.

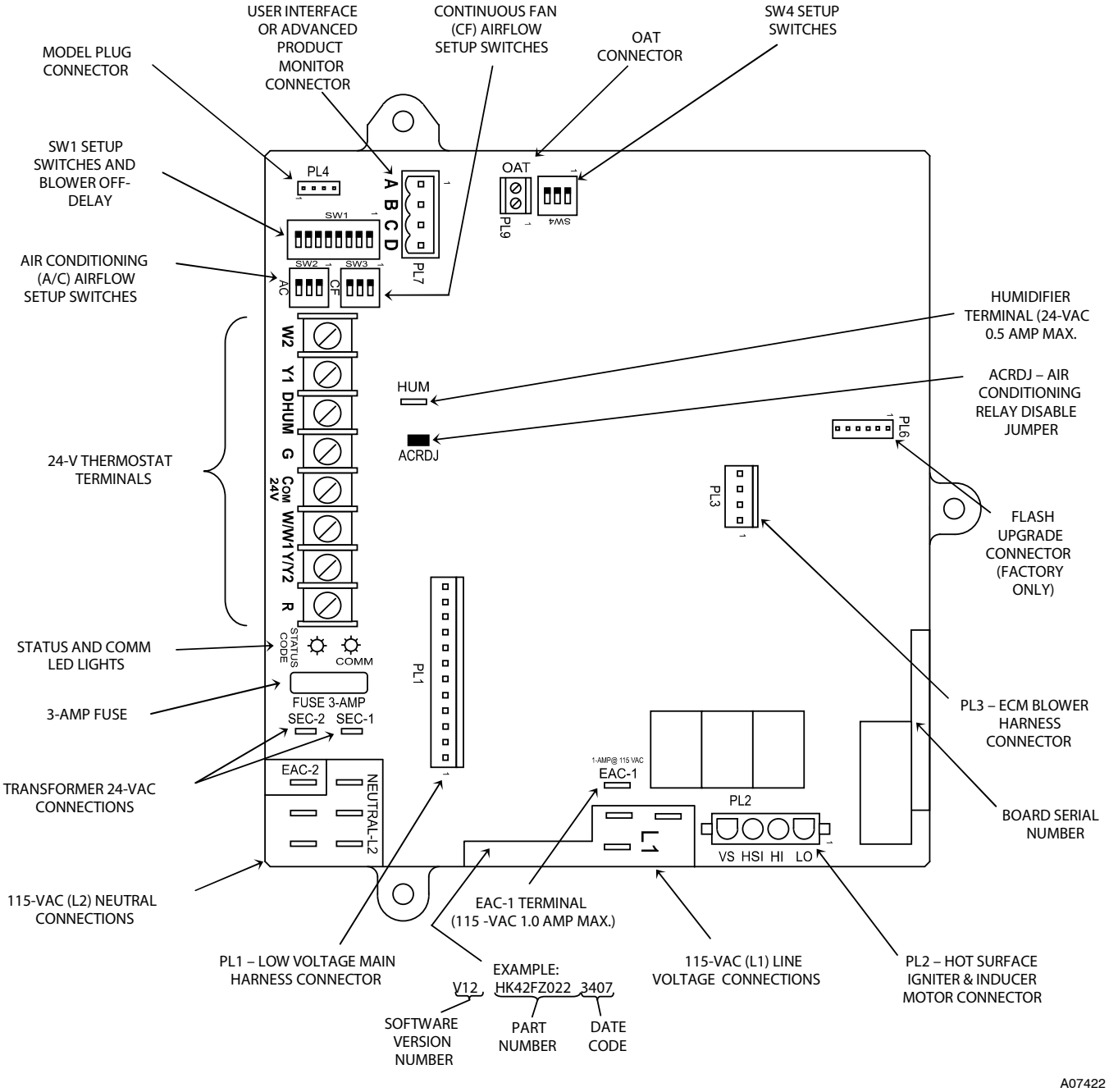

Fig. 33 - Furnace Control

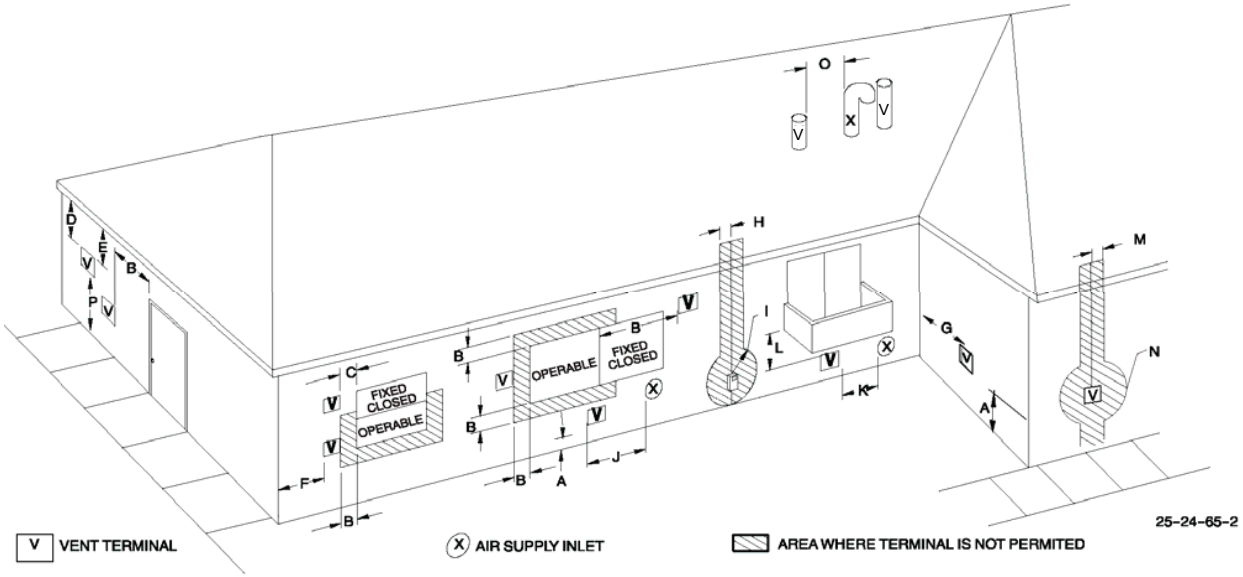

Item	Clearance Description	Canadian Installation (1)	U.S. Installation (2)
A	Clearance above grade, veranda, porch, deck, balcony, or anticipated snow level	12 inches(30 cm) #	12 inches (30 cm)
B	Clearance to a window or door that may be opened	12 inches (30 cm) for appliances > 10,000 Btuh (3 kW) and ≤ 100,000 Btuh (30 kW), 36 inches (91 cm) for appliances > 100,000 Btuh (30 kW)	9 inches (23 cm) for appliances > 10,000 Btuh (3kW) and ≤ 50,000 Btuh (15kW), 12 inches (30cm) for appliances > 50,000 Btuh (15kW)
C	Clearance to a permanently closed window	*	*
D	Vertical clearance to a ventilated soffit located above the terminal within a horizontal distance of 2 feet(61cm) from the centerline of the terminal	*	*
E	Clearance to an unventilated soffit	*	*
F	Clearance to an outside corner	*	*
G	Clearance to an inside corner	*	*
H	Clearance to each side of the centerline extended above electrical meter or gas service regulator assembly	3 feet (91 cm) within 15 feet (4.5 m) above the meter/regulator assembly	3 feet (91 cm) within 15 feet(4.5 m) above the meter/regulator assembly
I	Clearance to service regulator vent outlet	3 feet (91 cm)	*
J	Clearance to non-mechanical air supply inlet to building or the combustion air inlet to any other appliance	12 inches (30 cm) for applieances >10,000 Btuh(3 kW) and ≤ 100,000 Btuh(30kW), 36 inches (91cm) for appliances > 100,000 Btuh(30kW)	9 inches (23 cm) for appliances > 10,000 Btuh (3kW) and ≤ 50,000 Btuh (15kW), 12 inches (30cm) for appliances > 50,000 Btuh (15kW)
K	Clearance to a mechanical air supply inlet	6 feet (1.83 m)	3 feet(91 cm) above if within 10 feet (3m)horizontally
L	Clearance under a veranda, porch, deck, or balcony	12 inches(30 cm) +	*
M	Clearance to each side of the centerline extended above or below vent terminal of the furnace to a dryer or water heater vent, or other appliance's direct vent intake or exhaust.	12 inches (30 cm)	12 inches (30 cm)
N	Clearance to the vent terminal of a dryer vent, water heater vent, or other appliances direct vent intake or exhaust.	3 feet (91 cm)	3 feet (91 cm)
O	Clearance from a plumbing vent stack	3 feet (91 cm)	3 feet (91 cm)
P	Clearance above paved sidewalk or paved driveway located on public property	7 feet (2.13m)**	*

(1.) In accordance with the current CSA B149.1, Natural Gas and Propane Installation Code

(2.) In accordance with the current ANSI Z223.1/NFPA 54, National Fuel Gas Code

18 ˝ (46 cm) above roof surface

+ Permitted only if veranda, porch, deck, or balcony is fully open on a minimum of two sides beneath the floor.

* For clearances not specified in ANSI Z223.1/NFPA 54 or CSA B149.1, clearances shall be in accordance with local installation codes and the requirements of the gas supplier and the manufacturer's installation instructions

** A vent shall not terminate above a sidewalk or paved driveway that is located between two single family dwellings and serves both dwellings.

Notes:

1. The vent for this appliance shall not terminate
   a. Over public walkways; or
   b. Near soffit vents or crawl space vents or other areas where condensate or vapor could create a nusaince or hazard or property damage; or
   c. Where condensate vapor could cause damage or could be detrimental to the operation of regulators, relief valves, or other equipment.
2. When locating vent terminations, consideration must be given to prevailing winds, location, and other conditions which may cause recirculation of the combustion products of adjacent vents. Recirculation can cause poor combustion, inlet condensate problems, and accelerated corrosion of the heat exchangers.
3. Avoid venting under a deck or large overhang. Recirculation could occur and cause performance or system problems.

A08600

Fig. 34 – Direct Vent Termination Clearance

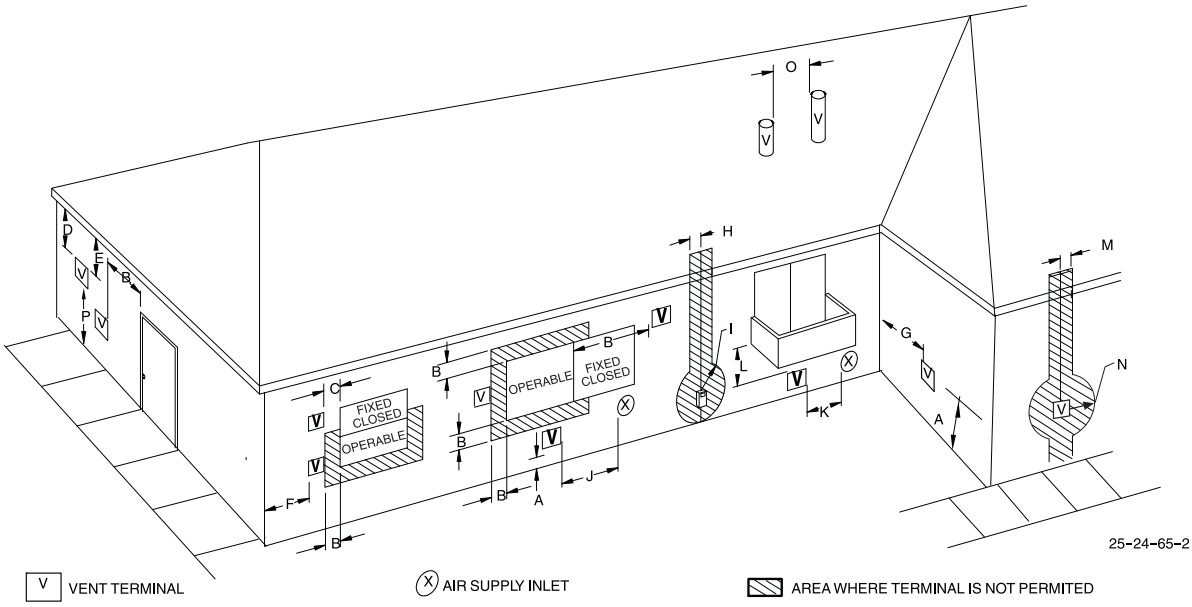

Item	Clearance Descriptions	Canadian Installation (1)	U.S. Installation (2)
A	Clearance above grade, veranda, porch, deck, balcony, or anticipated snow level	12 inches (30cm) #	12 inches (30 cm)
B	Clearance to a window or door that may be opened	6 inches (15 cm) for appliances ≤ 10,000 Btuh (3 kW) 12 inches (30 cm) for appliances > 10,000 Btuh (3 kW0) and ≤ 100,000 Btuh (30 kW), 36 inches (91 cm) for appliances > 100,000 Btuh (30 kW)	4 feet(1.2 m) below or to the side of the opening. 1 foot(30 cm) above the opening.
C	Clearance to a permanently closed window	*	*
D	Vertical clearance to a ventilated soffit located above the terminal within a horizontal distance of 2´(61cm) from the centerline of the terminal	*	*
E	Clearance to an unventilated soffit	*	*
F	Clearance to an outside corner	*	*
G	Clearance to an inside corner	*	*
H	Clearance to each side of the centerline extended above electrical meter or gas service regulator assembly	3 feet (91 cm) within 15 feet(4.5 m) above the meter/regulator assembly	3 feet (91 cm) within 15 feet (4.5 m) above the meter/regulator assembly
I	Clearance to service regulator vent outlet	3 feet (91 cm)	*
J	Clearance to non-mechanical air supply inlet to building or the combustion air inlet to any other appliance	6 inches (15 cm) for appliances ≤ 10,000 Btuh (3 kW) 12 inches (30 cm) for appliances > 10,000 Btuh (3 kW0) and ≤ 100,000 Btuh (30 kW) 36 inches (91 cm) for appliances > 100,000 Btuh (30 kW)	4 feet(1.2 m) below or to the side of opening: 1 foot (30 cm) above opening.
K	Clearance to a mechanical air supply inlet	6 feet(1.83 m)	3 feet(91 cm) above if within 10 feet (3 m horizontally)
L	Clearance under a veranda, porch, deck, or balcony	12 inches(30 cm) +	*
M	Clearance to each side of the centerline extended above or below vent terminal of the furnace to a dryer or water heater vent, or other appliance's direct vent intake or exhaust.	*	*
N	Clearance to the vent terminal of a dryer vent, water heater vent, or other appliances direct vent intake or exhaust.	*	*
O	Clearance from a plumbing vent stack	*	*
P	Clearance above paved sidewalk or paved driveway located on public property	7 feet (2.13m)**	7 feet (2.13m)

(1.) In accordance with the current CSA B149.1, Natural Gas and Propane Installation Code

(2.) In accordance with the current ANSI Z223.1/NFPA 54, National Fuel Gas Code

18˝ (46 cm) above roof surface

+ Permitted only if veranda, porch, deck, or balcony is fully open on a minimum of two sides beneath the floor.

* For clearances not specified in ANSI Z223.1/NFPA 54 or CSA B149.1, clearances shall be in accordance with local installation codes and the requirements of the gas supplier and the Manufacturer's installation instructions.

** A vent shall not terminate above a sidewalk or paved driveway that is located between two single family dwellings and serves both dwellings.

Notes:

1. The vent for this appliance shall not terminate
   a. Over public walkways; or
   b. Near soffit vents or crawl space vents or other areas where condensate or vapor could create a nusiance or hazard or property damage; or
   c. Where condensate vapor could cause damage or could be detrimental to the operation of regulators, relief valves, or other equipment.
2. When locating vent terminations, consideration must be given to prevailing winds, location, and other conditions which may cause recirculation of the combustiob products of adjacent vents. Recirculation can cause poor combustion, inlet condensate problems, and accelerated corrosion of the heat exchangers.
3. Avoid venting under a deck or large overhang. Recirculation could occur and cause performance or system problems.

A08601

Fig. 35 - Ventilated Combustion Air Vent Termination Clearance

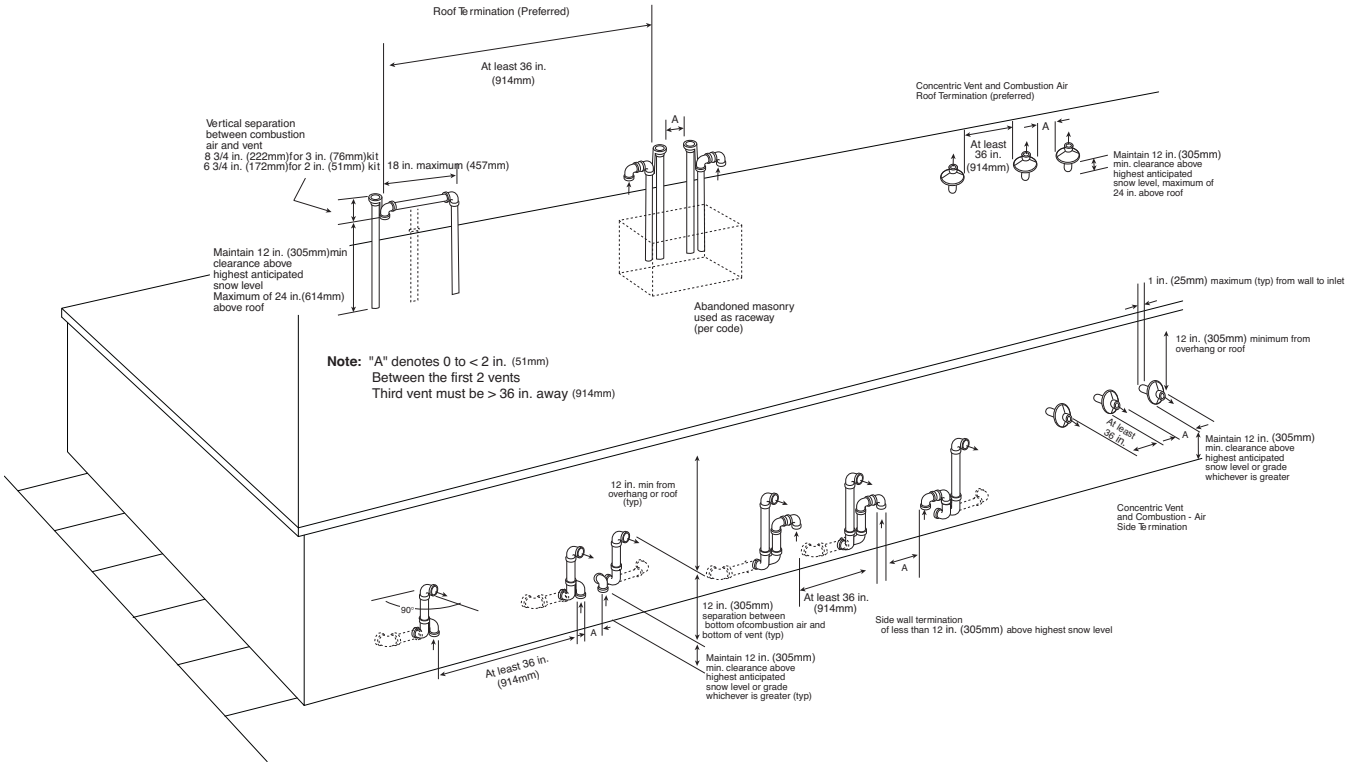

A05090

Fig. 36 - Combustion Air and Vent Termination for Direct Vent (2-pipe) System

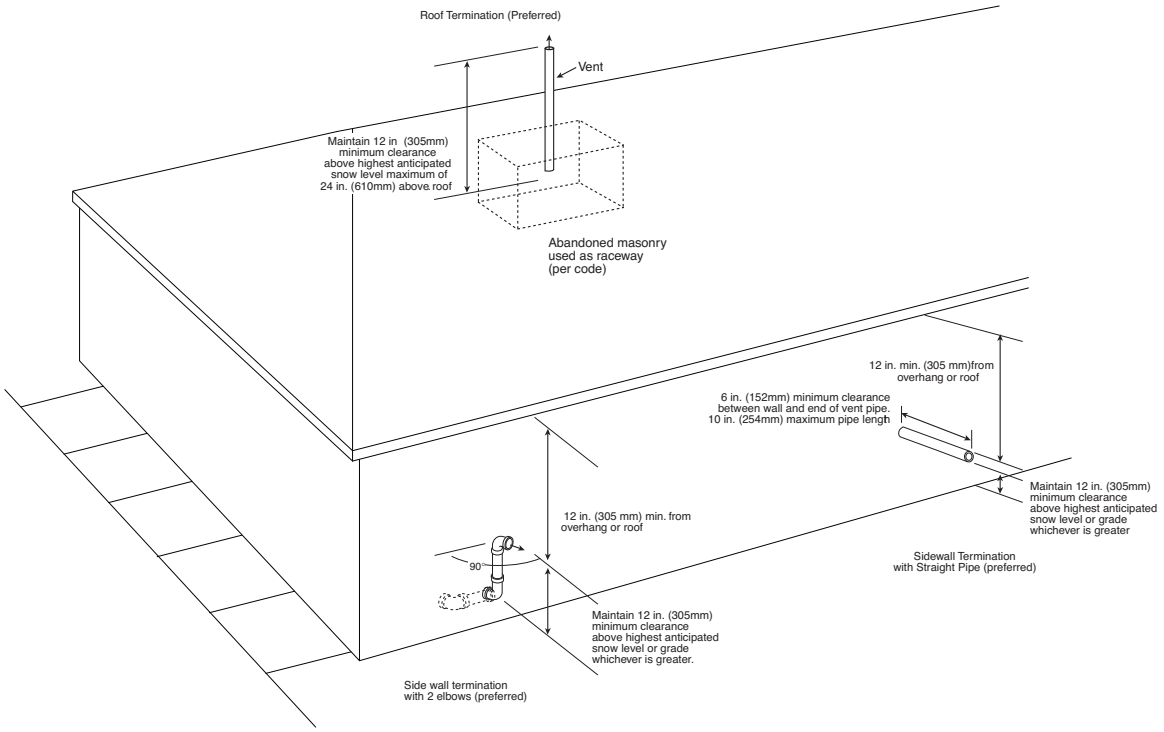

A05091

Fig. 37 - Vent Pipe Termination for Ventilated Combustion Air System

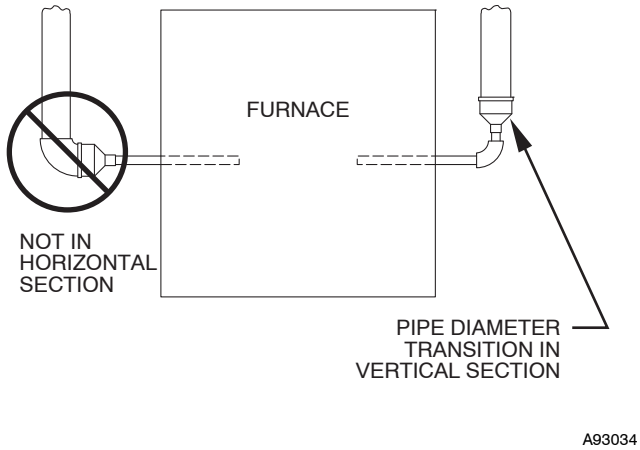

Fig. 38 - Combustion Air and Vent Pipe Transition Location and Elbow Configuration

⚠ CAUTION

UNIT OPERATION HAZARD

Failure to follow this caution may result in intermittent unit operation.

When installing combustion air and vent system of short pipe length, the smallest allowable pipe diameter must be used.

⚠ CAUTION

UNIT CORROSION HAZARD

Failure to follow this caution may result in unit component damage.

Excessive exposure to contaminated combustion air may result in safety and performance related problems. Combustion air must not be taken from inside structure because that air is frequently contaminated by halogens, which include fluorides, chlorides, bromides, and iodides. These elements are found in aerosols, detergents, bleaches, cleaning solvents, salts, air fresheners, adhesives, paint, and other household products. Locate combustion-air inlet as far as possible from swimming pool and swimming pool pump house.

EXAMPLE: This 80,000 BTUH furnace located in Indianapolis, elevation 650 ft. (198.1M) above sea level, could be installed as a direct Vent / 2-pipe system that requires 3 elbows and 17 ft. (5.1M) of vent pipe, along with 5 elbows and 16 ft. (4.8M) of combustion-air pipe. Table 7 indicates this application would allow a 1-1/2-in. diameter vent pipe, but require a 2-in. diameter combustion air pipe. According to Table 7, 1-1/2-in. diameter pipe is good for 20 ft. (6.0M) with 3 elbows, but only 10 ft. (3.0M) with 5 elbows. Therefore, 2-in. diameter pipe must be used for both vent and combustion-air pipes since the largest required diameter must always be used for both pipes. If the same installation was made in Albuquerque, elevation 5250 ft. (1600.2M) above sea level, installation would require 2- in. diameter vent pipe and combustion-air pipe. At 5001 to 6000-ft (1524M - 1828M) elevation, 1-1/2-in. pipe is not allowed with 5 elbows, but 2-in. pipe is good for 68 ft. (20.7M) with 5 elbows are required.

COMBUSTION AIR PIPE

General

Furnace combustion-air connection must be attached as shown in Fig. 39. Combustion-air intake housing plug may need to be relocated in some applications.

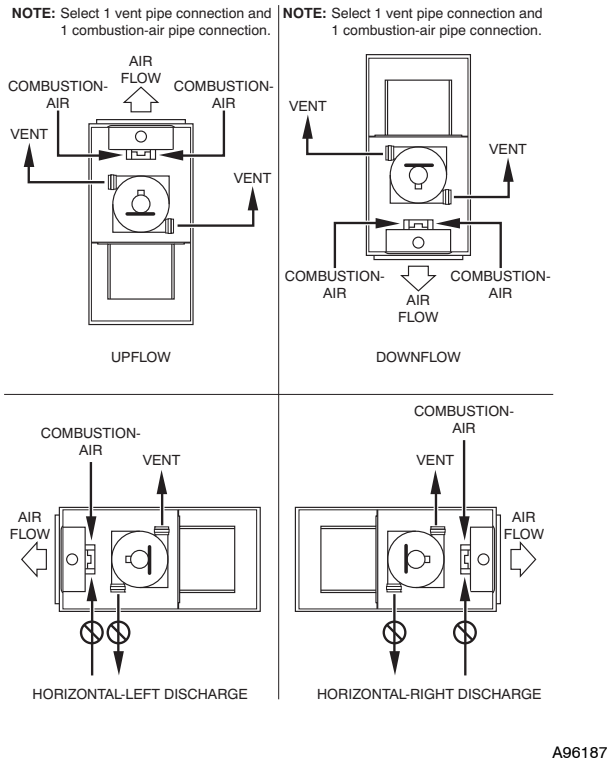

Fig. 39 - Combustion Air and Vent Pipe Connections

NOTE: All pipe joints must be cemented except attachment of combustion-air pipe to inlet housing connection, since it may be necessary to remove pipe for servicing.

NOTE: A 2-in. diameter pipe must be used within the furnace casing. Make all pipe diameter transitions outside furnace casing.

Attachment of Combustion Air Pipe

NOTE: Combustion air pipe system has the same diameter and same length as the vent pipe as mentioned in section "Combustion- -Air and Vent Pipe Diameter."

1. Determine location of combustion-air intake pipe connection to combustion-air intake housing as shown in Fig. 39 for application.
2. Verify combustion-air intake housing plug fitting is installed in appropriate unused intake housing connection.
3. Install combustion-air pipe grommet (factory-supplied in loose parts bag) into selected furnace casing combustion air pipe hole.
4. Determine the number of combustion air disk halves to be installed in the combustion air intake housing. Insert perforated disk half or assembly (factory supplied in loose parts bag) in intake housing where combustion-air intake pipe will be connected.
5. Insert assembled combustion air inlet pipe into intake housing as shown in Fig. 39.

NOTE: Do not cement combustion air intake pipe permanently to combustion air intake housing since it may be necessary to remove pipe for service of igniter or flame sensor.

6. Drill a 1/8-in. hole in 2-in, combustion air pipe using the hole in intake housing as a guide.
7. Install a field-supplied No. 6 or No. 8 sheet metal screw into combustion air pipe.

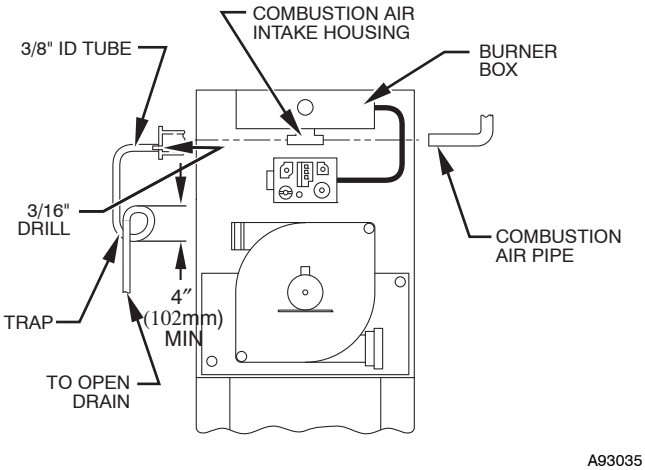

Fig. 40 - Intake Housing Plug Fitting Drain

8. Install casing hole filler cap (factory-supplied in loose parts bag) in unused combustion air pipe casing hole.

Attachment of Combustion Air Intake Housing Plug Fitting

The combustion-air intake plug fitting must be installed in unused combustion air intake housing. This fitting must be attached by using RTV sealant, or by drilling a 1/8-in. hole in fitting, using hole in intake housing as a guide. Install a field-supplied No. 6 or No. 8 sheet metal screw.

NOTE: DO NOT OVER-TIGHTEN SCREW. Breakage of intake housing or fitting may cause air leakage to occur.

A plugged drain connection has been provided on this fitting for use when moisture is found in combustion air intake pipe and combustion box.

If use of this drain connection is desired, drill out fitting's tap plug with 3/16-in. drill and connect a field-supplied 3/8-in. tube. This tube should be routed to open condensate drain for furnace and A/C (if used), and should be trapped, as shown in Fig. 40.

NOTE: (Direct Vent / 2-Pipe System ONLY). Moisture in combustion air intake may be a result of improper termination. Ensure combustion air pipe termination is similar to those as shown in Fig. 36 so that it will not be susceptible to area where light snow or others sources of moisture could be pulled in.

Combustion Air Termination - Ventilated Combustion Air Option

Provisions for adequate combustion, ventilation, and dilution air must be provided in accordance with:

- U.S. Installations: Section 9.3 NFPA 54/ANSI Z223.1-2006, Air for Combustion and Ventilation and applicable provisions of the local building codes.
- Canadian Installations: Part 8 of CAN/CS-B149.1-05. Venting Systems and Air Supply for Appliances and all authorities having jurisdiction.

Combustion air is piped directly to the burner box on furnace using the same materials used to vent the furnace. (See Table 5.) The combustion air pipe is terminated in an attic or crawl space that is well ventilated with OUTDOOR AIR and is well isolated from the living space or garage. If the furnace is installed in a well ventilated attic, crawlspace or other enclosure, the combustion air pipe can be terminated in the same space.

⚠ CAUTION

UNIT CORROSION HAZARD

Failure to follow this caution may result in reduced furnace component life.

Air for combustion must not be contaminated by halogen compounds, which include fluoride, chloride, bromide, and iodide. These elements may corrode heat exchangers and shorten furnace life. Air contaminants are found in aerosol sprays, detergents, bleaches, cleaning solvents, salts, air fresheners, and other household products.

The combustion air pipe cannot be terminated in attics or crawlspaces that use ventilation fans designed to operate during the heating season. If ventilation fans are present in these areas, the combustion air pipe must terminate outdoors as a Direct Vent/ 2-Pipe system.

⚠ WARNING

CARBON MONOXIDE POISONING HAZARD

Failure to follow this warning could result in personal injury or death.

The operation of exhaust fans, kitchen ventilation fans, clothes dryers, attic exhaust fans or fireplaces could create a NEGATIVE PRESSURE CONDITION at the furnace. Makeup air MUST be provided for the ventilation devices, in addition to that required by the furnace. Refer to the Carbon Monoxide Poisoning Hazard warning at the end of this section to determine if an adequate amount of make-up air is available.

NOTE: Combustion air pipe must have the same diameter as vent pipe.

An attic or crawlspace may be considered a space that freely communicates with the outdoors provided there are adequate permanent ventilation openings directly to outdoors having free area of at least 1-in.^{2}/4,000 Btuh of total input rating for all gas appliances in the space.

NOTE: In determining the free area of an opening, the blocking effect of the louvers, grilles, and screens must be considered. If the free area of a louver or grille design is unknown, it may be assumed that wood louvers have a 20 percent free area, and metal louvers or grilles have a 60 percent free area. Screens, when used, must not be smaller than 1/4-in. mesh. Louvers and grilles must be constructed so they cannot be closed.

⚠ WARNING

CARBON MONOXIDE POISONING HAZARD

Failure to follow this warning could result in personal injury or death.

Many homes require air to be supplied from outdoors for furnace combustion, ventilation, and dilution of flue gases.

The furnace combustion air supply must be provided in accordance with this instruction manual.

Attic terminations require at least (1) 90 degree elbow, with the open end pointing horizontally or downward. The open end of the elbow must be at least 12-in. (305 mm) above any insulation or other materials. Screen the elbow with a wire mesh screen no smaller than 3/8-inch square. (See Fig. 41.)

Crawlspace terminations require the open end of the combustion air intake pipe to point downward. Maintain 3 inches (76 mm) of clearance below the floor joist insulation and 12 inches (305 mm) above the grade. Screen the elbow with a wire mesh screen no smaller than 3/8-in. (10 mm) square. (See Fig. 42 and 43.)

⚠ WARNING

CARBON MONOXIDE POISONING HAZARD

Failure to follow the steps outlined below for each appliance connected to the venting system being placed into operation could result in carbon monoxide poisoning or death.

The following steps shall be followed for each appliance connected to the venting system being placed into operation, while all other appliances connected to the venting system are not in operation:

1. Seal any unused openings in venting system.
2. Inspect the venting system for proper size and horizontal pitch, as required in the National Fuel Gas Code, ANSI Z223.1-2006/NFPA 54-2006 or the CSA B149.1-05, Natural Gas and Propane Installation Code and these instructions. Determine that there is no blockage or restriction, leakage, corrosion and other deficiencies, which could cause an unsafe condition.
3. As far as practical, close all building doors and windows and all doors between the space in which the appliance(s) connected to the venting system are located and other spaces of the building.
4. Close fireplace dampers.
5. Turn on clothes dryers and any appliance not connected to the venting system. Turn on any exhaust fans, such as range hoods and bathroom exhausts, so they are operating at maximum speed. Do not operate a summer exhaust fan.
6. Follow the lighting instructions. Place the appliance being inspected into operation. Adjust the thermostat so appliance is operating continuously.
7. Test for spillage from draft hood equipped appliances at the draft hood relief opening after 5 minutes of main burner operation. Use the flame of a match or candle.
8. If improper venting is observed during any of the above tests, the venting system must be corrected in accordance with the National Fuel Gas Code, ANSI Z223.1-2006/NFPA 54-2006 and/or CSA B149.1-05, Natural Gas and Propane Installation Code.
9. After it has been determined that each appliance connected to the venting system properly vents when tested as outlined above, return doors, windows, exhaust fans, fireplace dampers and any other gas-fired burning appliance to their previous conditions of use.

Combustion Air Termination-Direct Vent / 2-Pipe System

Combustion air pipe must terminate outside the structure with the vent pipe as shown in Fig. 36. Follow the clearance requirements shown in Fig. 39. Refer to Vent Termination section for complete details on termination options.

VENT PIPE

General

Furnace vent connection must be attached as shown in Fig. 39.

⚠ WARNING

CARBON MONOXIDE POISONING AND PROPERTY DAMAGE HAZARD

Failure to follow this warning could result in personal injury or death.

Vent pipes must be airtight.

NOTE: A 2-in. (51 mm) diameter pipe must be used within the furnace casing. Make all pipe diameter transitions outside furnace casing per Fig. 38.

The minimum vent pipe length for these furnaces is 5 ft. (1.5M) Short pipe lengths (5-8 ft. or 1.5M-2.4M) may discharge condensate droplets. These condensate droplets may be undesirable. A 12-in. (305 mm) minimum offset pipe section is recommended to reduce excessive condensate droplets from exiting vent pipe outlet. (See Fig. 44.)

Attachment of Vent Pipe

NOTE: Vent pipe system has the same diameter and same length as combustion air pipe as mentioned in section "Combustion Air Pipe and Vent Pipe Diameter."

⚠ CAUTION

UNIT DAMAGE HAZARD

Failure to follow this caution may result in unit component damage.

Inducer housing outlet cap must be installed and fully seated against inducer housing. Clamp must be tightened to prevent any condensate leakage.

Vent pipe must be installed and fully seated against inducer housing. Clamp must be tightened to prevent any condensate leakage.

1. Determine location of vent pipe connection to inducer housing as shown in Fig. 39 for application.
2. Verify synthetic rubber inducer housing outlet cap and clamp are installed on appropriate unused inducer housing connection and that clamp is tight.
3. Install vent pipe grommet (factory-supplied in loose parts bag) into selected furnace casing vent pipe hole. (See Fig. 28.)
4. Be certain that mating surfaces of inducer housing connection synthetic rubber coupling, and 2-in. diameter vent pipe are clean and dry. Assemble the synthetic rubber vent coupling (with 2 loose clamps) onto inducer housing connection. Insert the 2-in. diameter vent pipe through the synthetic rubber coupling and fully into inducer housing connection until it touches a stop inside the inducer housing outlet. Tighten the screws on both clamps to 15-in lb. of torque.
5. Install casing hole filler cap (factory-supplied in loose parts bag) in unused vent pipe casing hole.

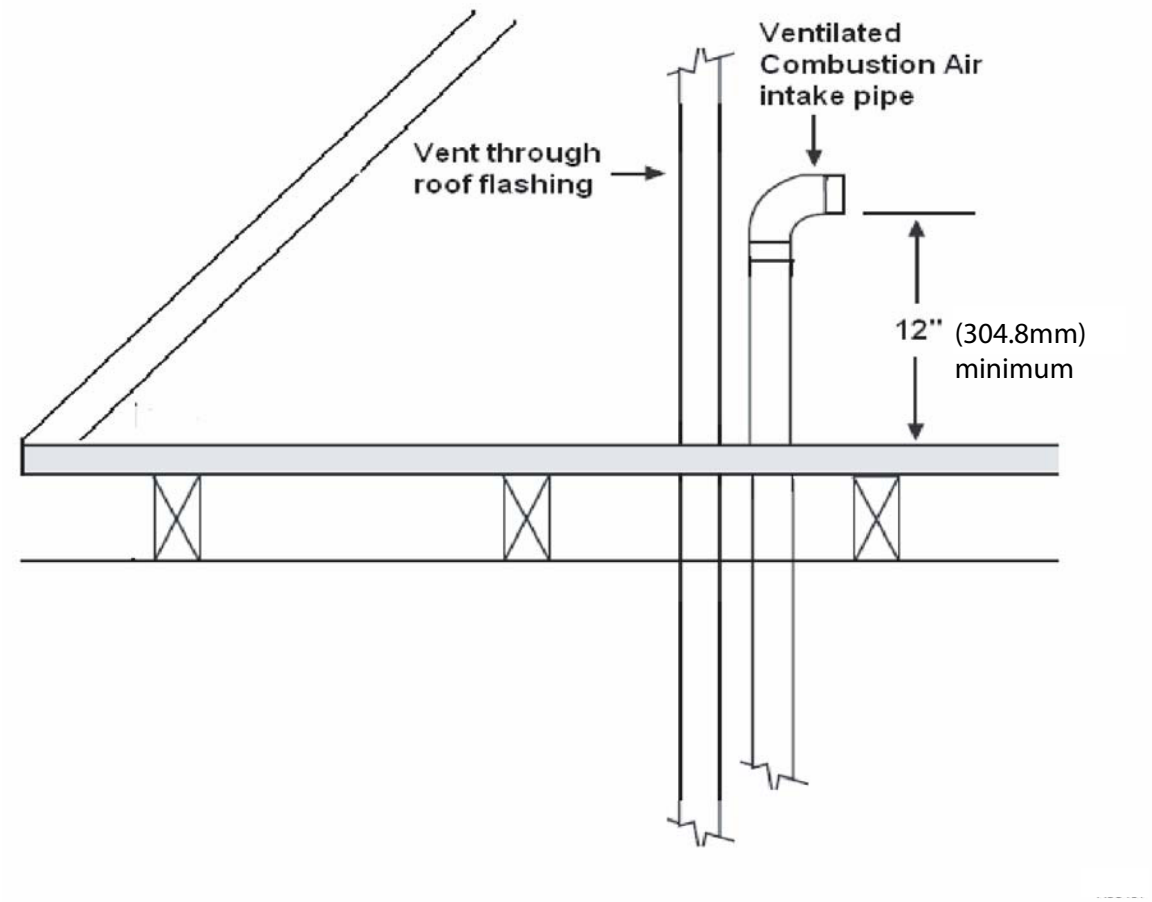

Fig. 41 - Attic Termination

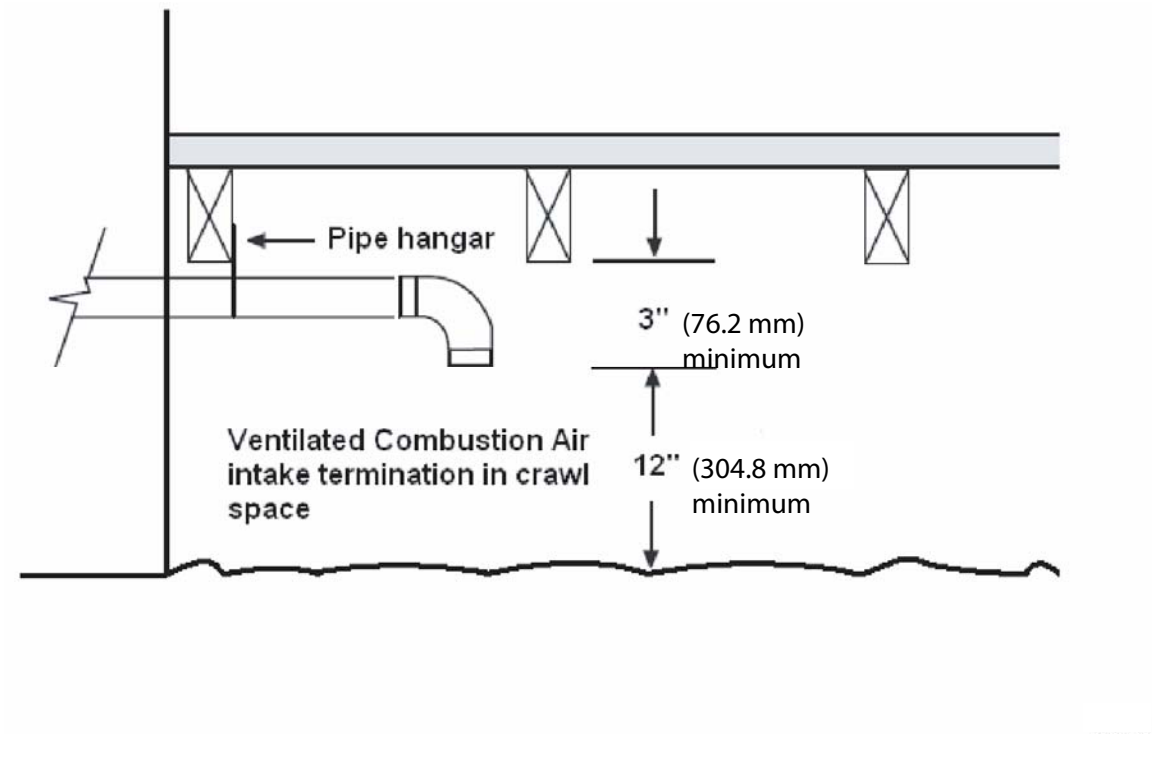

Fig. 42 - Crawlspace Termination

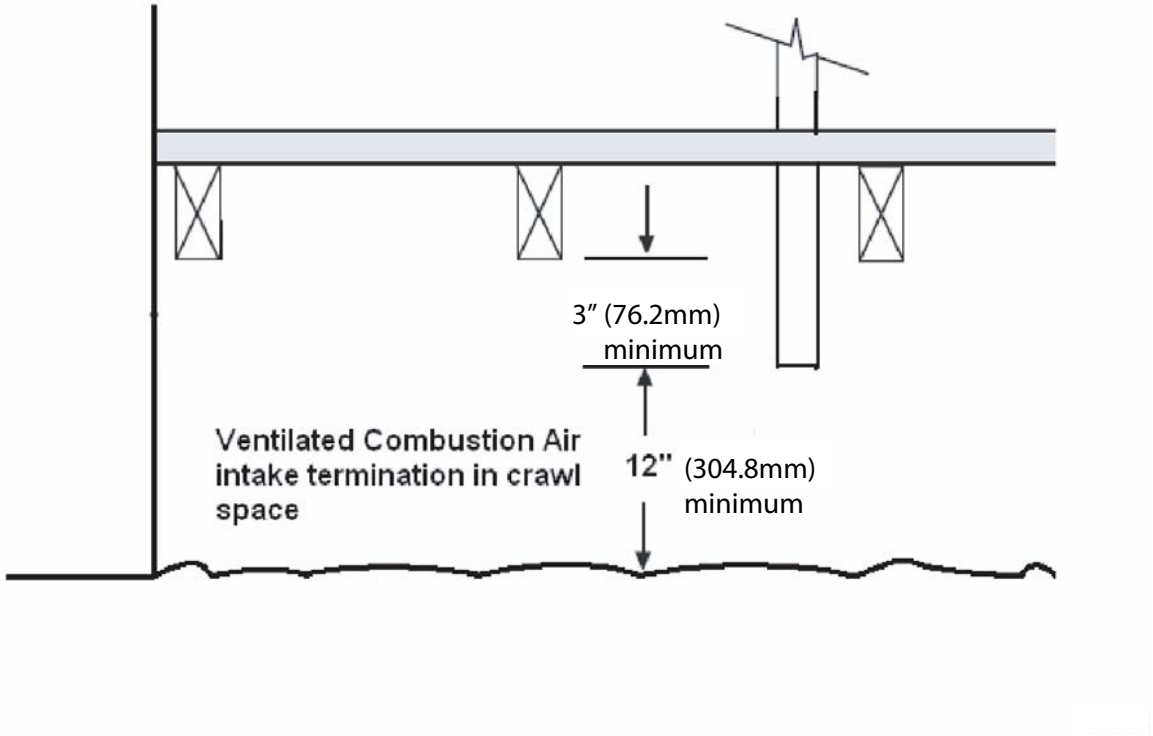

A06674

Fig. 43 - Crawlspace Termination

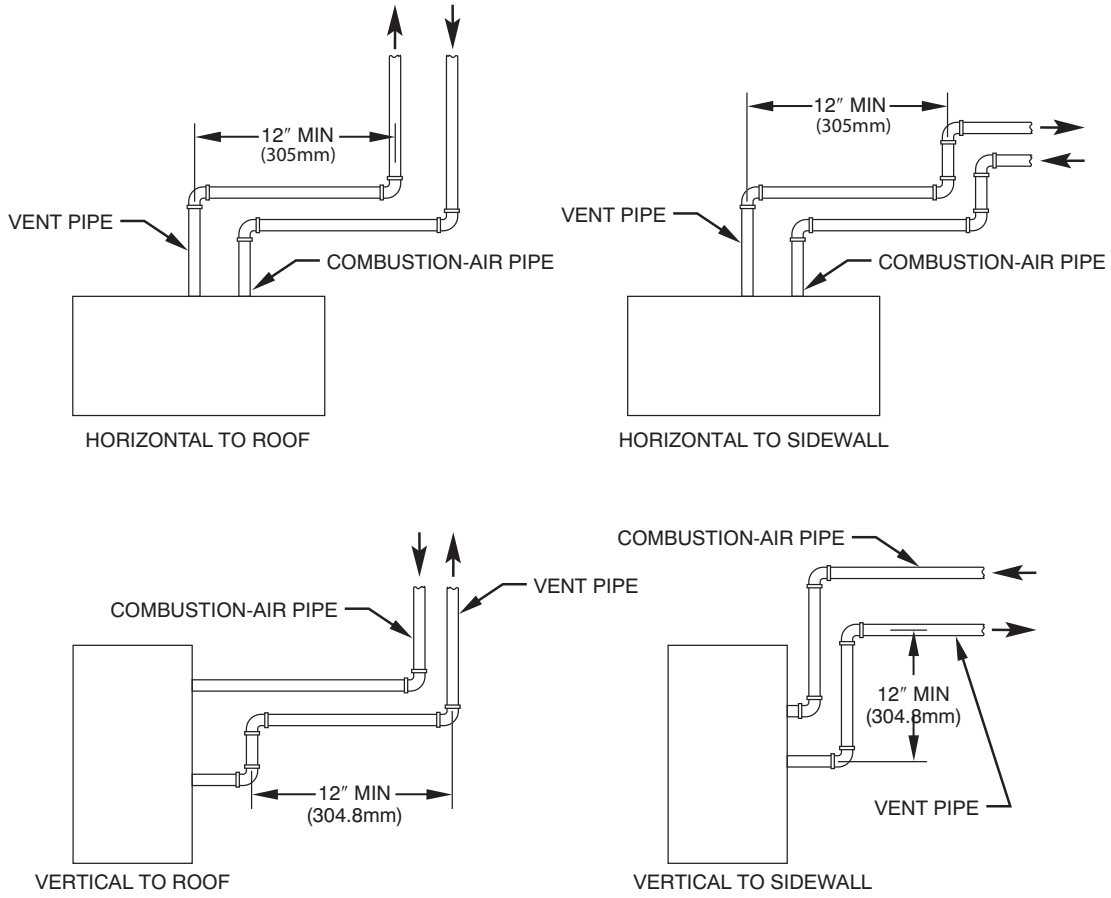

NOTE: A 12-in. (304.8mm) minimum offset pipe section is recommended with short (5 to 8 ft / 1.5 to 2.5M) vent systems. This recommendation is to reduce excessive condensate droplets.

A96230

Fig. 44 - Short Vent (5 to 8 ft. / 1.5M to 2.4M) System

NOTE: Starting at furnace, slope vent pipe a minimum of 1/4-in. (6 mm) per linear ft. back toward furnace with no sags between hangers.

VENT TERMINATION

General

Combustion-air (direct Vent / 2-pipe system only) and vent pipe must terminate outside structure, either through sidewall or roof. For vent termination clearance, refer to Fig. 34 for Direct Vent / 2-Pipe system and Fig. 35 for Ventilated Combustion Air option.

Roof termination is preferred since it is less susceptible to damage or contamination, and it has less visible vent vapors. Sidewall termination require sealing or shielding of building surfaces with a corrosive resistance material due to corrosive combustion products of vent system.

NOTE: (Direct Vent / 2-Pipe system ONLY) A factory accessory termination kit MUST be used. See section "Vent Termination Kit (Direct Vent / 2-Pipe System Only)" in this instruction.

When determining appropriate location for termination, consider the following guidelines:

1. Comply with all clearance requirements stated in Fig. 34 or Fig. 35 per application.
2. Termination or termination kit should be positioned where vent vapors will not damage plants/shrubs or air conditioning equipment.
3. Termination or termination kit should be positioned so that it will not be affected by wind eddy, such as inside building corners, nor by recirculation of flue gases, airborne leaves, or light snow.
4. Termination or termination kit should be positioned where it will not be damaged by or subjected to foreign objects such as stones, balls, etc.
5. Termination or termination kit should be positioned where vent vapors are not objectionable.

Extended Exposed Sidewall Pipes

Sidewall combustion air pipe termination (direct Vent / 2-pipe system only) and vent pipe termination may be extended beyond area shown in Fig. 36 or in Fig. 37 per application in outside ambient by insulating pipe as indicated in Table 6.

1. Determine combustion air pipe diameter (direct Vent / 2-pipe system only) and vent pipe diameter, as stated above, using total pipe length and number of elbows.
2. Using winter design temperature (used in load calculations), find appropriate temperature for your application and furnace model.
3. Determine required insulation thickness for exposed pipe length(s).

NOTE: Pipe length (ft / M) specified for maximum pipe lengths located in unconditioned spaces cannot exceed total allowable pipe length as specified in Table 6.

Vent Termination Kit (Direct Vent / 2-Pipe System Only)

NOTE: Always refer to the instructions in termination kit for the latest version.

Combustion air and vent pipes MUST terminate outside structure. A factory accessory termination kit must be installed as shown in Table 8. There are four options of vent/combustion air termination kits available as shown in Table 8.

NOTE: Combustion air pipe must have the same diameter as vent pipe.

Concentric Vent / Combustion Air Termination Kit (Direct Vent / 2-Pipe System Only

Determine an appropriate location for termination kit using the guidelines provided in section "Vent Termination: General" in this instruction.

1. Cut one 4-in. diameter hole for 2-in. kit, or one 5-in. diameter hole for 3-in. kit.
2. Loosely assemble concentric vent/combustion air termination components together using instructions in kit.
3. Slide assembled kit with rain shield REMOVED through hole.

NOTE: Do not allow insulation or other materials to accumulate inside of pipe assembly when installing it through hole.

Roof terminations-Locate assembly through roof to appropriate height as shown in Fig. 36 or Fig. 37.

Sidewall terminations-Locate assembly through sidewall with rain shield positioned no more than 1-in (25 mm). from wall as shown in Fig. 36 and Fig. 37.

4. Disassemble loose pipe fittings. Clean and cement using same procedures as used for system piping.
5. Check required dimensions as shown.

Two-Pipe Termination Kit (Direct Vent / 2-Pipe System Only)

Determine an appropriate location for termination kit using the guidelines provided in section "Vent Termination: General" in this instruction.

1. Cut 2 holes, 1 for each pipe, of appropriate size for pipe size being used.
2. Loosely install elbow in bracket and place assembly on combustion-air pipe.
   Roof terminations-Loosely install pipe coupling on properly cut vent pipe. Coupling must be positioned so bracket will mount as shown in Fig. 38.
   For applications using combustion-air pipe option, indicated by dashed lines in Fig. 36, install 90° street elbow into 90° elbow, making a U-fitting. A 180° U-fitting may be used.
   Sidewall terminations-Install bracket as shown in Fig. 36.

For applications using vent pipe option indicated by dashed lines in Fig. 36, rotate vent elbow 90° from position shown in Fig. 36.

3. Disassemble loose pipe fittings. Clean and cement using same procedures as used for system piping.
4. Check required dimensions as shown in Fig. 36.

(Direct Vent / 2-Pipe System ONLY)-When 2 or more 355CAV furnaces are vented near each other, 2 vent terminations may be installed as shown in Fig. 36, but next vent termination must be at least 36 in. (914 mm) away from first 2 terminations. It is important that vent terminations be made as shown in Fig. 36 to avoid recirculation of flue gases.

Table 6 – Maximum Allowable Exposed Vent Pipe Length with Insulation in Winter Design Temperature Ambient*

UNIT SIZE	WINTER DESIGN TEMPERATURE	MAXIMUM PIPE DIAMETER IN. (MM)	INSULATION THICKNESS†				
			0	3/8	1/2	3/4	1
060	20° F / –7° C	2 (51)	28 (8.5)	50 (15.2)	56 (17.1)	66 (20.1)	70 (21.3)
	0° F / –18° C	2 (51)	11 (3.4)	25 (7.6)	29 (8.8)	35 (10.7)	41 (12.5)
	–20° F / –29° C	2 (51)	4 (1.2)	15 (4.6)	18 (5.5)	23 (7.0)	27 (8.2)
080	20° F / –7° C	2 (51)	36 (11.0)	65 (19.8)	70 (21.3)	70 (21.3)	70 (21.3)
	0° F / –18° C	2 (51)	16 (4.9)	34 (10.4)	39 (11.9)	47 (14.3)	55 (16.8)
	–20° F / –29° C	2 (51)	8 (2.4)	21 (6.4)	25 (7.6)	31 (9.4)	37 (11.3)
100	20° F / –7° C	2–1/2 (64)	42 (12.8)	70 (21.3)	70 (21.3)	70 (21.3)	70 (21.3)
	0° F / –18° C	2–1/2 (64)	18 (5.5)	38 (11.6)	43 (13.1)	53 (16.2)	61 (18.6)
	–20° F / –29° C	2–1/2 (64)	9 (2.7)	23 (7.0)	27 (8.2)	34 (10.4)	41 (12.5)
120	20° F / –7° C	3 (76)	44 (13.4)	70 (21.3)	70 (21.3)	70 (21.3)	70 (21.3)
	0° F / –18° C	3 (76)	18 (5.5)	38 (11.6)	44 (13.4)	54 (16.5)	63 (19.2)
	–20° F / –29° C	3 (76)	8 (2.4)	23 (7.0)	27 (8.2)	35 (10.7)	41 (12.5)

* Pipe length (ft/m) specified for maximum pipe lengths located in unconditioned spaces. Pipes located in unconditioned space cannot exceed total allowable pipe length as specified in Table 7.

†Insulation thickness based on R value of 3.5 per in.

Table 7 – Maximum Allowable Pipe Length - Ft (M)

ALTITUDE	UNIT SIZE (BTUH)	Direct Vent (2–Pipe Only) Termination Type	Pipe Dia In. (mm)*	NUMBER OF 90° ELBOWS 1	2	3	4	5	6
0 to 2000 (0 to 610)	60,000	2 Pipe or 2–In. (51) Concentric	1–1/2 (38)	50 (15.2)	45 (13.7)	40 (12.9)	35 (10.7)	30 (9.1)	25 (7.6)
			2 (51)	70 (21.3)	70 (21.3)	70 (21.3)	70 (21.3)	70 (21.3)	70 (21.3)
	80,000	2 Pipe or 2–In. (51) Concentric	1–1/2 (38)	30 (9.14)	25 (7.6)	20 (6.1)	15 (4.6)	10 (3.0)	5 (1.5)
			2 (51)	70 (21.3)	70 (21.3)	70 (21.3)	70 (21.3)	70 (21.3)	70 (21.3)
	100,000	2 Pipe or 2–In. (51) Concentric	2 (51)	45 (13.7)	40 (12.9)	35 (10.7)	30 (9.1)	25 (7.6)	20 (6.1)
			2–1/2 (64)	70 (21.3)	70 (21.3)	70 (21.3)	70 (21.3)	70 (21.3)	70 (21.3)
	120,000	2 Pipe or 3–In. (76) Concentric	2–1/2 one disk	10 (3.0)	NA	NA	NA	NA	NA
			3 (76) one disk	35 (10.7)	30 (9.1)	15 (4.8)	NA	NA	NA
			3 (76) one disk†	70 (21.3)	70 (21.3)	70 (21.3)	70 (21.3)	70 (21.3)	70 (21.3)
ALTITUDE	UNIT SIZE (BTUH)	Termination Type	Pipe Dia In. (mm)*	NUMBER OF 90° ELBOWS 1	2	3	4	5	6
2001 to 3000 (610 to 914)	60,000	2 Pipe or 2–In. (51) Concentric	1–1/2 (38)	45 (13.7)	40 (12.9)	35 (10.7)	30 (9.14)	25 (7.6)	20 (6.1)
			2 (51)	70 (21.3)	70 (21.3)	70 (21.3)	70 (21.3)	70 (21.3)	70 (21.3)
	80,000	2 Pipe or 2–In. (51) Concentric	1–1/2 (38)	26 (7.9)	21 (6.4)	16 (4.9)	11 (3.4)	6 (1.8)	NA
			2 (51)	70 (21.3)	70 (21.3)	70 (21.3)	70 (21.3)	70 (21.3)	70 (21.3)
	100,000	2 Pipe or 2–In. (51) Concentric	2 (51)	40 (12.2)	35 (10.7)	30 (9.1)	25 (7.6)	20 (6.1)	15 (4.6)
			2–1/2 (64)	70 (21.3)	70 (21.3)	70 (21.3)	70 (21.3)	70 (21.3)	70 (21.3)
	120,000	2 Pipe or 3–In. (76) Concentric	3 (76) one disk	31 (9.4)	26 (7.9)	12 (3.7)	NA	NA	NA
			3 (76) one disk†	63 (19.2)	62 (18.9)	62 (18.9)	61 (18.6)	61 (18.6)	61 (18.6)
ALTITUDE	UNIT SIZE (BTUH)	Termination Type	Pipe Dia In. (mm)*	NUMBER OF 90° ELBOWS 1	2	3	4	5	6
3001 to 4000 (914 to 1219)	60,000	2 Pipe or 2–In. (51) Concentric	1–1/2 (38)	42 (12.8)	37 (11.2)	32 (9.8)	27 (8.2)	22 (6.7)	17 (5.2)
			2 (51)	70 (21.3)	70 (21.3)	70 (21.3)	70 (21.3)	70 (21.3)	70 (21.3)
	80,000	2 Pipe or 2–In. (51) Concentric	1–1/2 (38)	25 (7.6)	20 (6.1)	15 (4.6)	10 (3.0)	5 (1.5)	NA
			2 (51)	70 (21.3)	70 (21.3)	70 (21.3)	70 (21.3)	70 (21.3)	70 (21.3)
	100,000	2 Pipe or 2–In. (51) Concentric	2 (51)	38 (11.6)	33 (10.1)	28 (8.5)	23 (7.0)	18 (5.5)	13 (4.0)
			2–1/2 (64)	70 (21.3)	70 (21.3)	70 (21.3)	70 (21.3)	70 (21.3)	70 (21.3)
	120,000	2 Pipe or 3–In. Concentric	3 (76) one disk	29 (8.8)	24 (7.3)	10 (3.0)	NA	NA	NA
			3 (76) one disk†	59 (18.0)	59 (18.0)	58 (17.8)	57 (17.4)	57 (17.4)	56 (17.0)
ALTITUDE	UNIT SIZE (BTUH)	Termination Type	Pipe Dia In. (mm)*	NUMBER OF 90° ELBOWS 1	2	3	4	5	6
4001 to 5000 (1219 to 1524)‡	60,000	2 Pipe or 2–In. (51) Concentric	1–1/2 (38)	40 (12.2)	35 (10.7)	30 (9.1)	25 (7.6)	20 (6.1)	15 (9.6)
			2 (51)	70 (21.3)	70 (21.3)	70 (21.3)	70 (21.3)	70 (21.3)	70 (21.3)
	80,000	2 Pipe or 2–In. (51) Concentric	1–1/2 (38)	23 (7.0)	18 (5.5)	13 (4.0)	8 (2.4)	NA	NA
			2 (51)	70 (21.3)	70 (21.3)	70 (21.3)	70 (21.3)	70 (21.3)	68 (20.7)
	100,000	2 Pipe or 2–In. (51) Concentric	2 (51)	36 (11.0)	31 (9.4)	26 (7.9)	21 (6.4)	16 (4.8)	11 (3.4)
			2–1/2 (64)	70 (21.3)	70 (21.3)	70 (21.3)	70 (21.3)	70 (21.3)	70 (21.3)
	120,000	2 Pipe or 3–In. (76) Concentric	3 (76) one disk†	56 (17.1)	55 (16.8)	54 (16.5)	53 (6.2)	52 (15.8)	52 (15.8)
ALTITUDE	UNIT SIZE (BTUH)	Termination Type	Pipe Dia In. (mm)*	NUMBER OF 90° ELBOWS 1	2	3	4	5	6
5001 to 6000 (1524 to 1829)‡	60,000	2 Pipe or 2–In. (51) Concentric	1–1/2 (38)	37 (11.3)	32 (9.8)	27 (8.2)	22 (6.7)	17 (5.2)	12 (3.7)
			2 (51)	70 (21.3)	70 (21.3)	70 (21.3)	70 (21.3)	70 (21.3)	70 (21.3)
	80,000	2 Pipe or 2–In. (51) Concentric	1–1/2 (38)	22 (6.7)	17 (5.2)	12 (3.7)	7 (2.1)	NA	NA
			2 (51)	70 (21.3)	70 (21.3)	70 (21.3)	70 (21.3)	68 (20.7)	63 (19.2)
	100,000	2 Pipe or 2–In. (51) Concentric	2 (51)	33 (10)	28 (8.5)	23 (7.0)	18 (5.5)	13 (4.0)	8 (2.4)
			2–1/2 (64)	70 (21.3)	70 (21.3)	70 (21.3)	70 (21.3)	70 (21.3)	70 (21.3)
	120,000	2 Pipe or 3–In. (76) Concentric	3 (76) one disk†	53 (16.2)	52 (15.8)	50 (15.2)	49 (14.9)	48 (14.6)	47 (14.3)

*See notes on next page.

Table 7 — Maximum Allowable Pipe Length – Ft (M) (Continued)

ALTITUDE	UNIT SIZE (BTUH)	Direct Vent (2-Pipe Only) Termination Type	Pipe Dia In. (mm)*	NUMBER OF 90° ELBOWS 1	2	3	4	5	6
6001 to 7000 (1829 to 2134)‡	60,000	2 Pipe or 2–In. (51) Concentric	1–1/2 (38)	35 (10.7)	30 (9.1)	25 (7.6)	20 (6.1)	15 (4.6)	10 (3.0)
			2 (51)	70 (21.3)	70 (21.3)	68 (20.7)	67 (20.4)	66 (20.1)	64 (19.5)
	80,000	2 Pipe or 2–In. (51) Concentric	1–1/2 (38)	20 (6.1)	15 (4.6)	10 (3.0)	5 (1.5)	NA	NA
			2 (51)	70 (21.3)	70 (21.3)	68 (20.7)	67 (20.4)	62 (18.9)	57 (17.4)
	100,000	2 Pipe or 2–In. (51) Concentric	2 (51)	31 (9.4)	26 (7.9)	21 (6.4)	16 (4.9)	11 (3.4)	6 (1.8)
			2–1/2 (64)	70 (21.3)	70 (21.3)	68 (20.7)	67 (20.4)	66 (20.1)	64 (19.5)
	120,000	2 Pipe or 3–In. (76) Concentric	3 (76) one disk†	49 (14.9)	48 (14.6)	47 (14.3)	45 (13.7)	44 (13.4)	43 (13.1)
ALTITUDE	UNIT SIZE (BTUH)	Termination Type	Pipe Dia In. (mm)*	NUMBER OF 90° ELBOWS 1	2	3	4	5	6
7001 to 8000 (2134 to 2438)‡	60,000	2 Pipe or 2–In. (51) Concentric	1–1/2 (38)	32 (9.8)	27 (8.2)	22 (6.7)	17 (5.2)	12 (3.7)	7 (2.1)
			2 (51)	66 (20.1)	65 (19.8)	63 (19.2)	62 (18.9)	60 (18.3)	59 (18.0)
	80,000	2 Pipe or 2–In. (51) Concentric	1–1/2 (38)	18 (5.5)	13 (4.0)	8 (2.4)	NA	NA	NA
			2 (51)	66 (20.1)	65 (19.8)	63 (19.2)	62 (18.9)	57 (17.4)	52 (15.8)
	100,000	2 Pipe or 2–In. (51) Concentric	2 (51)	29 (8.8)	24 (7.3)	19 (5.8)	14 (4.3)	9 (2.7)	NA
			2–1/2 (64)	66 (20.1)	65 (19.8)	63 (19.2)	62 (18.9)	60 (18.3)	59 (18.0)
	120,000	2 Pipe or 3–In. (76) Concentric	3 (76) one disk†	46 (14.0)	44 (13.4)	43 (13.1)	41 (12.5)	40 (12.2)	38 (11.6)
ALTITUDE	UNIT SIZE (BTUH)	Termination Type	Pipe Dia In. (mm)*	NUMBER OF 90° ELBOWS 1	2	3	4	5	6
8001 to 9000 (2438 to 2743)‡	60,000	2 Pipe or 2–In. (51) Concentric	1–1/2 (38)	30 (9.1)	25 (7.6)	20 (6.1)	15 (4.6)	10 (3.0)	5 (1.5)
			2 (51)	62 (18.9)	60 (17.8)	58 (17.7)	56 (17.1)	55 (16.8)	53 (16.2)
	80,000	2 Pipe or 2–In. (51) Concentric	1–1/2 (38)	17 (5.2)	12 (3.1)	7 (2.1)	NA	NA	NA
			2 (51)	62 (18.9)	60 (18.3)	58 (17.7)	56 (17.1)	51 (15.5)	46 (14.0)
	100,000	2 Pipe or 2–In. (51) Concentric	2 (51)	27 (8.2)	22 (6.7)	17 (5.2)	12 (3.7)	7 (2.1)	NA
			2–1/2 (64)	62 (18.9)	60 (18.3)	58 (17.7)	56 (17.1)	55 (16.8)	53 (16.2)
	120,000	2 Pipe or 3–In. (76) Concentric	3 (76) one disk†	43 (13.1)	41 (12.5)	39 /11.9)	37 (11.3)	35 (10.7)	34 (10.4)
ALTITUDE	UNIT SIZE (BTUH)	Termination Type	Pipe Dia In. (mm)*	NUMBER OF 90° ELBOWS 1	2	3	4	5	6
9001 to 10000 (2743 to 3048)‡	60,000	2 Pipe or 2–In. (51) Concentric	1–1/2 (38)	27 (8.2)	22 (6.7)	17 (5.2)	12 (3.7)	7 (2.1)	NA
			2 (51)	57 (17.4)	55 (16.8)	53 (16.2)	51 (15.5)	49 (14.9)	47 (14.3)
	80,000	2 Pipe or 2–In. (51) Concentric	1–1/2 (38)	15 (4.6)	10 (3.0)	5 (1.5)	NA	NA	NA
			2 (51)	57 (17.4)	55 (16.8)	53 (16.2)	51 (15.5)	46 (14.0)	41 (12.5)
	100,000	2 Pipe or 2–In. (51) Concentric	2 (51)	24 (7.3)	19 (5.8)	14 (4.3)	9 (2.7)	NA	NA
			2–1/2 (64)	57 (17.4	55 (16.8)	53 (16.2)	51 (15.5)	49 (14.9)	47 (14.3)
	120,000	2 Pipe or 3–In. (76) Concentric	3 (76) one disk†	39 (11.9)	37 (11.3)	35 (10.7)	33 (10.1)	31 (9.5)	29 (8.8)

* Disk usage–Unless otherwise stated, use perforated disk assembly (factory–supplied in loose parts bag).
† Wide radius elbow.
‡ Vent sizing for Canadian installations over 4500 ft. (1370M) above sea level are subject to acceptance by the local authorities having jurisdiction.
NA–Not Allowed; pressure switch will not make.

NOTES:
1. Do not use pipe size greater than those specified in table or incomplete combustion, flame disturbance, or flame sense lockout may occur.
2. Size both the combustion–air and vent pipe independently, determine the smallest diameter allowed by the table for each pipe, then use the larger diameter for both pipes.
3. Assume two 45° elbows equal one 90° elbow. Long radius elbows are desirable and may be required in some cases.
4. Elbows and pipe sections within the furnace casing and at the vent termination should not be included in vent length or elbow count.
5. The minimum pipe length is 5 ft. (1.5M) for all applications.

Table 8 – Vent Termination Kit for Direct Vent/2-Pipe System

DIRECT VENT (2-PIPE) TERMINATION KIT	TERMINATION SYSTEM	DIAMETER OF COMBUSTION AIR AND VENT PIPES – IN (mm)
2-in. (51 mm) Concentric Vent Kit	Single Penetration of Wall or Roof	1, 1–1/2, 2, or 2–1/2 (25, 38, 51, 64 mm)
3-in. (76 mm)Concentric Vent Kit	Single Penetration of Wall or Roof	2–1/2, 3 or 4 (64, 76, 102 mm)
2-in. (51 mm)Termination Bracket Kit	2–Pipe Termination System	1, 1–1/2 or 2 (25, 38, 51mm)
3-in. (76 mm) Termination Bracket Kit	2–Pipe Termination System	2–1/2, 3 or 4 (64, 76, 102 mm)

Multi-venting and Vent Terminations

When 2 or more 355CAV Furnaces are vented near each other, each furnace must be individually vented. NEVER common vent or breach vent 355CAV furnaces.

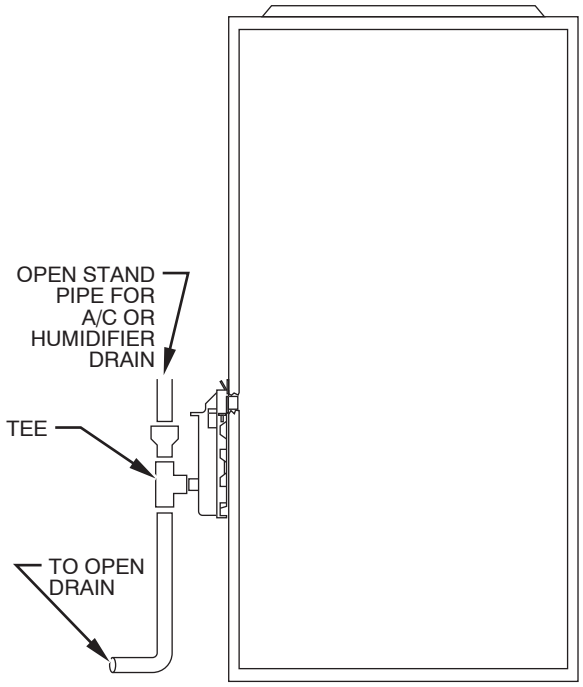

A94054

Fig. 45 - Example of Field Drain Attachment

CONDENSATE DRAIN

General

Condensate trap is shipped installed in the blower shelf and factory connected for UPFLOW applications. Condensate trap must be RELOCATED for use in DOWNFLOW and HORIZONTAL applications.

Condensate trap MUST be used for all applications.

An external trap is not required when connecting the field drain to this condensate trap.

The field drain connection (condensate trap or drain tube coupling) is sized for 1/2-in. CPVC, 1/2-in. PVC, or 5/8-in. ID tube connection.

Drain pipe and fittings must conform to ANSI standards and ASTM D1785, D2466, or D2846. CPVC or PVC cement must conform to ASTM D2564 or F493. Primer must conform to ASTM F656. In Canada, use CSA or ULC certified schedule 40 CPVC or PVC drain pipe, fittings, and cement.

When a condensate pump is required, select a pump which is approved for condensing furnace applications. To avoid condensate spillage, select a pump with an overflow switch.

Furnace condensate is mildly acidic, typically in the pH range of 3.2 to 4.5. Due to corrosive nature of this condensate, a condensate pH neutralizing filter may be desired. Check with local authorities to determine if a pH neutralizer is required.

Application

The furnace, A/C, and humidifier drains may be combined and drained together. The A/C drain must have an external, field-supplied trap prior to the furnace drain connection. All drain connections (furnace, A/C, or humidifier) must be terminated into an open or vented drain as close to the respective equipment as possible to to prevent siphoning of the equipment's drain.

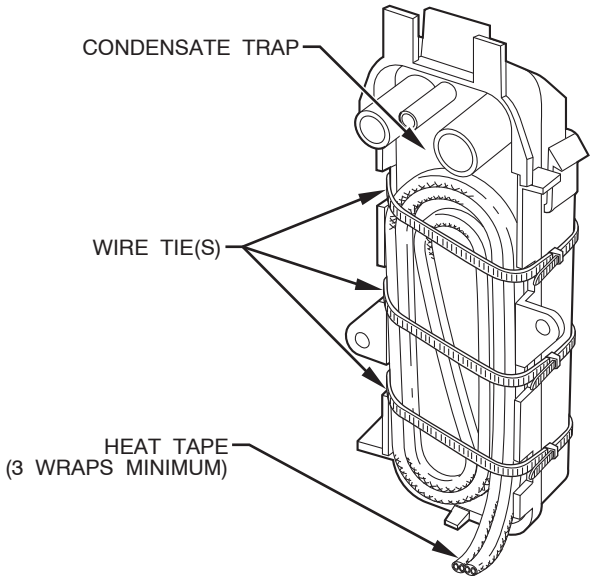

A93036

Fig. 46 - Condensate Trap Heat Tape

See Fig. 45 for example of possible field drain attachment using 1/2-in. CPVC or PVC tee for vent and A/C or humidifier drain connection.

Outdoor draining of the furnace is permissible if allowed by local codes. Caution should be taken when freezing ambient may freeze drain pipe and prohibit draining.

⚠ WARNING

PERSONAL INJURY HAZARD

Failure to follow this warning could result in personal injury or death.

Caution should be taken to prevent draining where slippery conditions may cause personal injuries. Excessive condensate draining may cause saturated soil conditions which may result in damage to plants.

Condensate Drain Protection

Freezing condensate left in condensate trap and drain line may cause cracks, and possible water damage may occur. If freeze protection is required, use condensate freeze protection accessory or equivalent 3 to 6 watt per ft. (.3M) at 120v and 40°F (4.4° C) self-regulating, shielded, and waterproof heat tape. See Installation Instructions supplied with accessory or heat tape manufacturer's recommendations.

1. Fold heat tape in half and wrap on itself 3 times.

2. Locate heat tape between sides of condensate trap back. (See Fig. 46.)
3. Use wire ties to secure heat tape in place. Wire ties can be positioned in notches of condensate trap sides. (See Fig. 46.)
4. Wrap field drain pipe with remaining heat tape, approximately 1 wrap per ft. (.3M).
5. When using field-supplied heat tape, follow heat tape manufacturer's instructions for all other installation guidelines.

START-UP, ADJUSTMENT AND SAFETY CHECK

Step 1 — General

1. Furnace must have a 115-v power supply properly connected and grounded.

NOTE: Proper polarity must be maintained for 115-v wiring. If polarity is incorrect, control status indicator light flashes rapidly and furnace does not operate.

2. Thermostat wire connections at terminals R, W/W1, G, and Y/Y2 must be made at 24-v terminal block on furnace control.
3. Natural gas service pressure must not exceed 0.5 psig (14-in. wc), but must be no less than 0.16 psig (4.5-in. wc).
4. Blower access panel must be in place to complete 115-v electrical circuit to furnace.

⚠ CAUTION

UNIT MAY NOT OPERATE

Failure to follow this caution may result in intermittent unit operation or performance satisfaction.

These furnaces are equipped with a manual reset limit switch in burner box. This switch opens and shuts off power to the gas valve if an overheat condition (flame rollout) occurs in burner enclosure. Correct inadequate combustion-air supply or improper venting condition before resetting switch. DO NOT jumper this switch.

Before operating furnace, check flame rollout manual reset switch for continuity. If necessary, press button to reset switch.

Step 2 — Select Setup Switch Positions

Air Conditioning (A/C) Setup Switches

The air conditioning setup switches are used to match furnace airflow to cooling unit used.

To set the desired cooling airflow:

1. Remove main furnace door and blower access panel.
2. Locate A/C setup switches on furnace control. (See Fig. 33.)
3. Determine air conditioning tonnage used.
4. Use Fig. 47 or wiring schematic to determine proper setup position of A/C switches. (See Fig. 48 and Fig. 49.)

NOTE: Excessive airflow caused by improper A/C switch setup may cause condensate blow-off in cooling mode.

5. Replace main furnace door and blower access panel.

NOTE: EAC-1 terminal is energized whenever blower operates. HUM terminal is only energized when blower is energized in heating.

Continuous Fan (CF) Setup Switches

The CF setup switches are used to select desired airflow when thermostat is in continuous fan mode or to select low-cooling airflow for two-speed cooling units. This setup feature allows continuous fan airflow or low-cooling airflow to be adjusted. To set desired continuous fan airflow or low-cooling airflow:

1. Remove main furnace door and blower access panel.
2. Locate CF setup switches on furnace control. (See Fig. 33.)
3. Determine desired continuous fan airflow or low-cooling airflow.
4. Use Fig. 47 or wiring schematic to determine proper setup position of CF switches. (See Fig. 48 and Fig. 49.)
5. Replace main furnace door and blower access panel.

AIR CONDITIONING (A/C) OR CONTINUOUS-FAN (CF) AIRFLOW SELECTION CHART

BASED ON 350 CFM/TON (SETUP SWITCH SW1-5 OFF)

MODEL SIZE	SETUP SWITCH SW3 POSITIONS							
	OFF 1 2 3	OFF 1 2 3	OFF 1 2 3	OFF 1 2 3	OFF 1 2 3	OFF 1 2 3	OFF 1 2 3	OFF 1 2 3
060, 3.5T080	DEF.	525 [2]	700	875	1050 [1]	1225	1225	1225
5T080, 100	DEF.	700 [2]	875	1050	1225	1400	1750 [1]	1750
120	DEF.	700	875 [2]	1050	1225	1400	1750 [1]	2100

BASED ON 400 CFM/TON (SETUP SWITCH SW1-5 ON)

MODEL SIZE	SETUP SWITCH SW3 POSITIONS							
	OFF 1 2 3	OFF 1 2 3	OFF 1 2 3	OFF 1 2 3	OFF 1 2 3	OFF 1 2 3	OFF 1 2 3	OFF 1 2 3
060, 3.5T080	DEF.	600 [2]	800	1000	1200 [1]	1400	1400	1400
5T080, 100	DEF.	800 [2]	1000	1200	1400	1600	2000 [1]	2000
120	DEF.	800	1000 [2]	1200	1400	1600	2000 [1]	2100

1. DEFAULT A/C AIRFLOW WHEN A/C SWITCHES ARE IN OFF POSITION
2. DEFAULT CONT. FAN AIRFLOW WHEN CF SWITCHES ARE IN OFF POSITION
3. SWITCH POSITIONS ARE ALSO SHOWN ON FURNACE WIRING DIAGRAM

A07424

Fig. 47 - A/C or CF Airflow Selection Chart Based on 350 and 400 CFM/Ton

Setup Switches (SW1)

The furnace control has 8 setup switches that may be set to meet the application requirements. To set these setup switches for the appropriate requirement:

1. Remove main furnace door and blower access panel.
2. Locate setup switches on furnace control. (See Fig. 33.)
3. See Table 9 for setup switch description. (See Fig. 48 and Fig. 49.)
4. Replace main furnace door and blower access panel.

NOTE: If a bypass humidifier is used, setup switch SW1-3 (Low Heat Rise Adjust) should be in ON position. This compensates for the increased temperature in return air resulting from bypass.

NOTE: If modulating dampers are used, blower motor automatically compensates for modulating dampers.

Additional Setup Switches (SW4)

The furnace control has 3 additional setup switches labeled SW4. (See Fig. 33.) Setup switch SW4-2 can be used to lock the furnace into medium heat. When setup switch SW4-2 is ON the furnace will remain at medium heat until W/W1 is de-energized to end a heating cycle or when both W/W1 and W2 are energized. When both W/W1 and W2 are energized the furnace will run at high heat. The other 2 setup switches are currently not used for anything. When setup switch SW4-2 is ON it will over ride setup switch SW1-2 if it is ON. To activate setup switch SW4-2:

1. Remove main furnace door and blower access panel.
2. Locate setup switch SW4 on furnace control. (See Fig. 33.)

3. See Table 5 for setup switch description. (See Fig. 40 and Fig. 49.)
4. Replace main furnace door and blower access panel.

Prime Condensate Trap with Water

⚠ CAUTION

UNIT OPERATION HAZARD

Failure to follow this caution may result in intermittent unit operation or performance satisfaction.

Condensate trap must be PRIMED or proper draining may not occur. The condensate trap has two internal chambers which can ONLY be primed by pouring water into the inducer drain side of condensate trap.

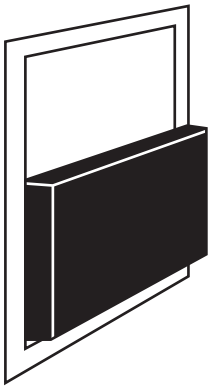

A04001

Fig. 48 - Example of Setup Switch in Off Position

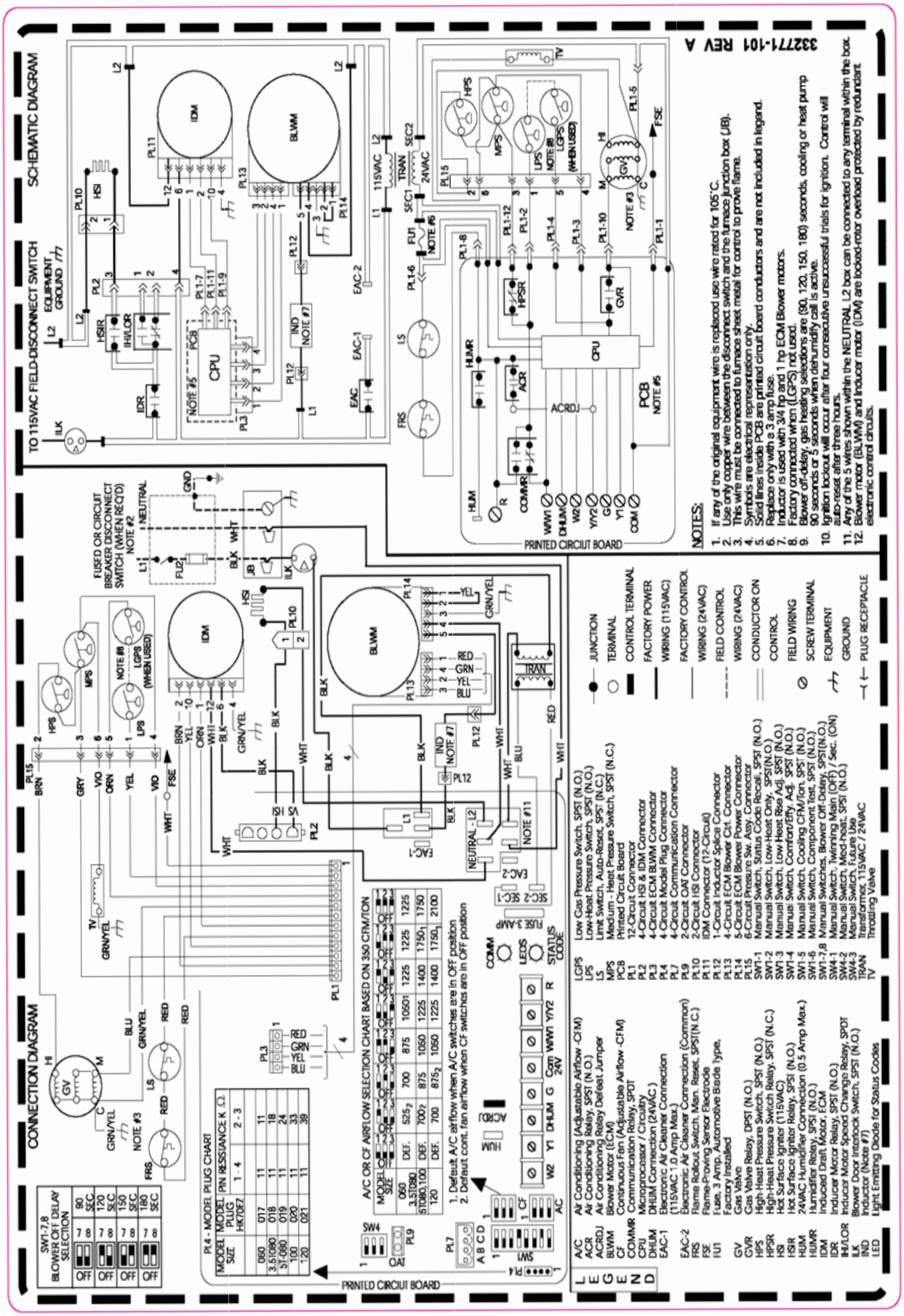

Fig. 49 – Wiring Diagram

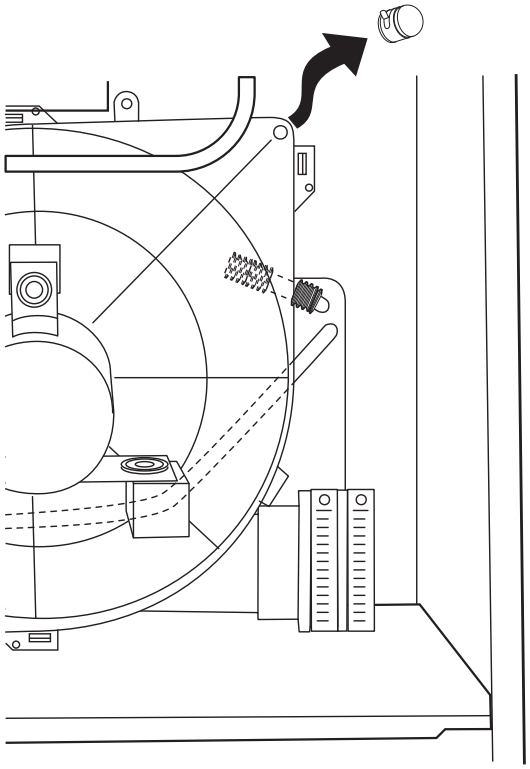

A99118

Fig. 50 - Inducer Housing Drain Tube

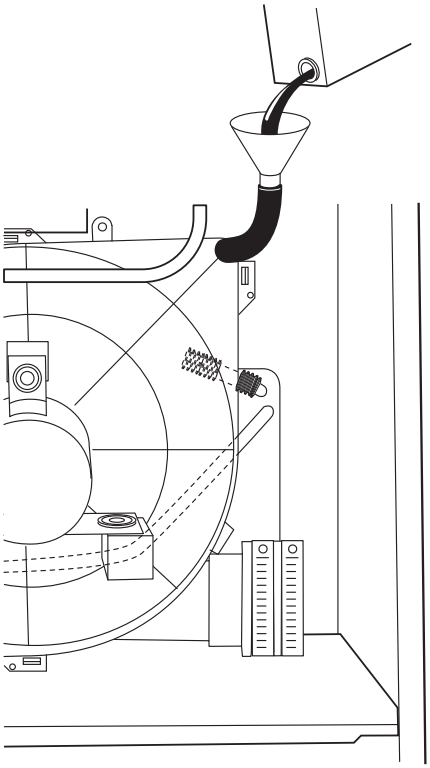

A01050

Fig. 51 - Filling Condensate Trap

Table 9 – Furnace Setup Switch Description

SETUP SWITCH NO.	SWITCH NAME	NORMAL POSITION	DESCRIPTION OF USE
SW1–1	Status Code Recovery	OFF	Turn ON to retrieve up to 7 stored status codes for troubleshooting assistance when R thermostat lead is disconnected.
SW1–2	Low Heat Only (Adaptive Heat Mode when OFF)	OFF	When SW1–2 and SW4–2 are OFF allows step–modulating operation with a single stage thermostat. Turn ON when using 2 stage thermostat to allow Low Heat operation when R to W/W1 closes and High Heat operation when R to W/W1 and W2 close.
SW1–3	Low/Medium Heat Rise Adjust	OFF	Turn ON to increase Low and Medium Heat airflow by 18 percent. This compensates for increased return air temperature caused with bypass humidifier. This also increases the Low and Medium Heat inducer speed 15 percent
SW1–4	Comfort/Efficiency Adjustment	ON	Turn ON to decrease Low Heat airflow 9 percent, Medium Heat airflow 7 percent, and High Heat airflow 15 percent for maximum comfort.
SW1–5	CFM per ton adjust	OFF	Turn ON for 400 CFM per ton. Turn OFF for 350 CFM per ton.
SW1–6	Component Self Test	OFF	Turn ON to initiate Component Self Test for troubleshooting assistance when R thermostat lead is disconnected. Turn OFF when Self Test is completed.
SW1–7 and SW1–8	Blower OFF delay	ON or OFF	Blower Off Delay time. See Table 6.
SW4–2	Medium Heat Only (Adaptive Heat Mode when OFF)	OFF	When SW1–2 and SW4–2 are OFF allows step–modulating operation with a single stage thermostat. Turn ON when using 2 stage thermostat to allow Medium Heat operation when R to W/W1 closes and High Heat operation when R to W/W1 and W2 close.

1. Remove upper inducer housing drain connection cap. (See Fig. 50.)
2. Connect field-supplied 1/2-in. ID tube to upper inducer housing drain connection.
3. Insert field-supplied funnel into tube.
4. Pour 1 quart of water into funnel/tube. Water should run through inducer housing, overfill condensate trap, and flow into open field drain. (See Fig. 51.)

Purge Gas Lines

If not previously done, purge the lines after all connections have been made and check for leaks.

⚠ WARNING

FIRE AND EXPLOSION HAZARD

Failure to follow this warning could result in a fire, explosion, personal injury, or death.

Never purge a gas line into a combustion chamber. Never test for gas leaks with an open flame. Use a commercially available soap solution made specifically for the detection of leaks to check all connections.

Step 3 — Sequence of Operation

⚠ CAUTION

UNIT OPERATION HAZARD

Failure to follow this caution may result in intermittent unit operation.

Furnace control must be grounded for proper operation, or control will lock out. Control is grounded through green/yellow wire routed to gas valve and burner box screw.

Using the schematic diagram (See Fig. 48), follow the sequence of operation through the different modes. Read and follow the wiring diagram very carefully. ! !

NOTE: If a power interruption occurs during a call for heat (W/W1 or W/W1-and-W2), the control will start a 90-second blower-only ON period two seconds after power is restored, if the thermostat is still calling for gas heating. The amber LED light will flash code 12 during the 90-second period, after which the LED will be ON continuous, as long as no faults are detected. After the 90-second period, the furnace will respond to the thermostat normally.

The blower door must be installed for power to be conducted through the blower door interlock switch ILK to the furnace control CPU, transformer TRAN, inducer motor IDM, blower motor BLWM, hot surface igniter HSI, throttling valve TV, and gas valve GV.

Single-Stage Thermostat and Step-Modulating Heating (Adaptive Mode)

See Fig. 29 or Fig. 59 for thermostat connections.

NOTE: Low-heat only switch SW1-2 selects the low-heat only operation mode when ON. Medium-heat only switch SW4-2 selects medium-heat only operation mode when ON. If both switches are ON the furnace control will default to medium-heat. If either or both switches are ON the furnace control will operate at two-stages only as referenced in Section 2 below. If both switches are OFF the furnace control will operate in the adaptive heating mode in response to a call for heat. (See Fig. 33.) When the W2 thermostat terminal is energized it will always cause high-heat operation as long as the R to W circuit is closed, regardless of the setting of the low-heat or medium-heat only switches.

This furnace can operate as a step-modulating furnace with a single-stage thermostat because the furnace control CPU includes a programmed adaptive sequence of controlled operation, which selects low-heat, medium-heat, or high-heat operation. This selection is based upon the stored history of the length of previous gas-heating periods of the single-stage thermostat.

The furnace will start up in either medium-, or high-heat. The furnace will operate in low-heat after starting and operating for 1 minute at medium-heat before transitioning to low-heat. The furnace control CPU determines the combined low-heat and medium-heat on-time (from 0 to 16 minutes) which is permitted before switching to high heat.

If the power is interrupted, the stored history is erased and the furnace control CPU will select medium-heat for 1 minute, low-heat for 15 minutes and then switch to high-heat, as long as the thermostat continues to call for heat. Subsequent selection is based on stored history of the thermostat cycle times.

The wall thermostat ”calls for heat”, closing the R to W circuit. The furnace control CPU performs a self-check, verifies the low-heat and medium-heat pressure switch contacts LPS and MPS are open, then de-energizes the HPSR relay to close the NC contact.

1. Inducer Prepurge Period - The furnace control CPU turns on inducer motor IDM and slowly increases the inducer motor speed. After the low-heat pressure switch LPS closes the furnace control CPU continues to increase the inducer motor speed until the medium-heat pressure switch MPS closes. When the medium-heat pressure switch MPS closes, throttling valve TV is energized, inducer motor RPM is noted by the furnace control CPU, and a 25-second prepurge period begins. The RPM is used to evaluate vent system resistance. This evaluation is then used to determine the required RPM necessary to operate the inducer motor during medium-heat prepurge, the first minute of medium-heat mode, and low-heat mode.

NOTE: The heat cycle can start in either high- or medium-heat. If a high-heat cycle is initiated, the furnace control CPU will continue to increase the inducer motor speed after the medium-heat pressure switch MPS closes. When the medium-heat pressure switch closes, throttling valve TV is energized, inducer motor RPM is noted by the furnace control CPU, and a 25-second prepurge period begins. The RPM is used to evaluate vent system resistance. This evaluation is then used to determine the required RPM necessary to operate the inducer motor in high-heat pre-purge, and high-heat mode.

2. Igniter Warm-Up — At the end of the prepurge period, the Hot-Surface Igniter HSI is energized for a 17-second igniter warm-up period.
3. Trial-For-Ignition Sequence — When the igniter warm-up period is completed the main gas valve relay contact GVR closes to energize the gas valve solenoid GV-M. The gas valve solenoid GV-M permits gas flow to the burners where it is ignited. Five seconds after the GVR closes, a 2-second Flame-Proving period begins. The HSI igniter will remain energized until flame is sensed or until the 2-second flame proving period begins.
   If the furnace control CPU selects high-heat operation, the high-heat gas valve solenoid GV-HI is energized when the high-heat pressure switch HPS closes.
4. Flame-Proving — When the burner flame is proved at the flame-proving sensor electrode FSE, the furnace control CPU begins the blower-ON delay period and continues to hold the gas valve GV-M open. If the burner flame is not proved within two seconds, the furnace control CPU will close the gas valve GV-M, and the furnace control CPU will repeat the ignition sequence for up to three more Trials-For-Ignition before going to Ignition-Lockout. Lockout will be reset automatically after three hours, by momentarily interrupting 115 vac power to the furnace, or by interrupting 24 vac power at SEC1 or SEC2 to the furnace control CPU (not at W/W1, G, R, etc.).
   If flame is proved when flame should not be present, the furnace control CPU will lock out of Gas-Heating mode and operate the inducer motor IDM at full speed until flame is no longer proved.

5. Inducer Speed Change — If the cycle starts in medium heat, the furnace control CPU reduces the inducer speed slightly after flame sense. If cycle starts in high-heat, the furnace control CPU increases the inducer speed after flame sense. The reduction in speed in medium-heat is to optimize combustion for maximum efficiency.
6. Blower-On delay — If the burner flame is proven the blower-ON delay for medium-heat and high-heat are as follows:
   Medium-heat — 60 seconds after the gas valve GV-M is opened the blower motor BLWM is turned ON at low- or medium-heat airflow.
   High-heat — 35 seconds after the gas valve GV-M is opened the BLWM is turned ON at high-heat airflow.
   Simultaneously, the humidifier terminal HUM and electronic air cleaner terminal EAC-1 are energized and remain energized throughout the heating cycle.
7. **Switching from Medium- to Low-Heat** — If the furnace control switches from medium-heat to low-heat, the furnace control will turn the blower ON at low-heat airflow, energize the HPSR relay to open the NC contact, and slowly decrease the inducer motor speed. When the HPSR relay is energized and the NC contact opens the throttling valve TV is deenergized and the gas flow reduces to low-heat rate.
   Switching from Low- to Medium-Heat — If the furnace control CPU switches from low-heat to medium-heat, the furnace control CPU will de-energize the HPSR relay to close the NC contact and slowly increase the inducer motor speed until the medium-heat pressure switch MPS closes. When the medium-heat pressure switch MPS closes, the throttling valve solenoid TV is energized and the inducer motor RPM is noted by the furnace control CPU. The RPM is used to evaluate vent system resistance. This evaluation is then used to determine the required RPM necessary to operate the inducer motor in medium-heat and high-heat mode. The blower motor BLWM will transition to medium-heat airflow five seconds after the furnace control CPU switches from low-heat to medium-heat.
   Switching from Low- to High-Heat — If the furnace control CPU switches from low-heat to high-heat, the furnace control CPU will de-energize the HPSR relay to close the NC contact and slowly increase the inducer motor speed until the medium-heat pressure switch MPS closes. When the medium-heat pressure switch MPS closes, the throttling valve solenoid TV is energized and the inducer motor RPM is noted by the furnace control CPU. The RPM is used to evaluate vent system resistance. This evaluation is then used to determine the required RPM necessary to operate the inducer motor in medium- and high-heat mode. The blower motor BLWM will transition to high-heat airflow five seconds after the furnace control CPU switches from low-heat to high-heat. As the inducer RPM gradually increases the high-heat pressure switch HPS closes and the gas valve solenoid GV-HI is energized.
   Switching from Medium- to High-Heat — If the furnace control CPU switches from medium-heat to high-heat, the furnace control CPU will gradually increase the inducer motor speed to the required high-heat RPM. The blower motor BLWM will transition to high-heat airflow five seconds after the furnace control CPU switches from medium-heat to high heat. As the inducer RPM gradually increases the high-heat pressure switch HPS closes and the gas valve solenoid GV-HI is energized.
   Switching from High- to Medium- or Low-Heat — The furnace control CPU will not switch from high-heat to medium- or low-heat while the thermostat R to W circuit is closed when using a single-stage thermostat.
8. **Blower-Off Delay** — When the thermostat is satisfied, the R to W circuit is opened, de-energizing the gas valve GV-M, stopping gas flow to the burners, and de-energizing the throttling valve TV, and humidifier terminal HUM. The inducer motor IDM will remain energized for a 15-second post-purge period. The blower motor BLWM and air cleaner terminal EAC-1 will remain energized at low-heat airflow or transition to low-heat airflow for 90, 120, 150, or 180 seconds (depending on selection at blower-OFF delay switches). The furnace control CPU is factory-set for a 120-second blower- OFF delay.

Two-Stage Thermostat and Two-Stage Low / High Heating

See Fig. 58 for thermostat connections.

NOTE: In this mode the low-heat only switch SW1-2 must be ON to select the low-heat only operation mode in response to closing the thermostat R to W1 circuit. Closing the thermostat R to W1-and-W2 circuits always causes high-heat operation, regardless of the setting of the low-heat only switch.

The furnace will start up in either medium-, or high-heat. The furnace will operate in low-heat after starting and operating for 1 minute at medium-heat before transitioning to low-heat.

The wall thermostat ”calls for heat”, closing the R to W1 circuit for low-heat or closing the R to W1-and-W2 circuits for high-heat. The furnace control performs a self-check, and verifies the low-heat and medium-heat pressure switch contacts LPS and MPS are open, then de-energizes the HPSR relay to close the NC contact.

The start up and shut down functions and delays described above apply to the 2-stage low/high heating mode as well, except for switching from high- to low-heat.

1. **Switching from High- to Low-Heat** — If the thermostat R to W2 circuit opens, and the R to W1 circuit remains closed, the furnace control CPU will gradually decrease the inducer motor speed to the required medium-heat RPM. When the inducer motor IDM reduces pressure sufficiently, the high heat pressure switch HPS will open and the high-heat gas valve solenoid GV-HI will be de-energized. The gas valve solenoid GV-M will remain energized as long as the low-heat pressure switch LPS remains closed. When the inducer motor speed gets within 15% of the required medium-heat RPM the furnace control CPU will start a 5 second blower airflow change delay. After the 5 second blower airflow change delay is completed the blower airflow will transition to low-heat airflow. At this point the furnace control CPU will energize the HPSR relay to open the NC contact and slowly decrease the inducer motor speed to the required low-heat RPM. When the HPSR relay is energized and the NC contact opens the throttling valve TV is de-energized and the gas flow reduces to low-heat rate. When the inducer motor IDM reduces pressure sufficiently, the medium-heat pressure switch MPS will open.

Two-Stage Thermostat and Two-Stage Medium/High Heating

See Fig. 58 for thermostat connections.

NOTE: In this mode the medium-heat only switch SW4-2 must be ON to select the medium-heat only operation mode in response to closing the thermostat R to W1 circuit. Closing the thermostat R to W1-and-W2 circuits always causes high-heat operation, regardless of the setting of the medium-heat only switch.

The wall thermostat ”calls for heat”, closing the R to W1 circuit for medium-heat or closing the R to W1-and-W2 circuits for high-heat. The furnace control performs a self-check, and verifies the low-heat and medium-heat pressure switch contacts LPS and MPS are open, then de-energizes the HPSR relay to close the NC contact.

The start up and shut down functions and delays described above apply to the 2-stage medium/high heating mode as well, except for switching from high- to medium-heat.

1. **Switching from High- to Medium-Heat** — If the thermostat R to W2 circuit opens, and the R to W1 circuit remains closed, the furnace control CPU will gradually decrease the inducer motor speed to the required medium-heat RPM. When the inducer motor IDM reduces pressure sufficiently, the high heat pressure switch HPS will open and the high-heat gas valve solenoid GV-HI will be de-energized. The gas valve solenoid GV-M will remain energized as long as the low-heat pressure switch LPS remains closed. When the inducer motor speed gets within 15% of the required medium-heat RPM the furnace control CPU will start a 5 second blower airflow change delay. After the 5 second blower airflow change delay is completed the blower airflow will transition to medium-heat airflow.

Cooling Mode

The thermostat "calls for cooling."

2. Single-Speed Cooling
   See Fig. 29 for thermostat connections.
   The thermostat closes the R to G-and-Y circuits. The R to Y circuit starts the outdoor unit, and the R to G-and-Y/Y2 circuits start the furnace blower motor BLWM on cooling airflow. Cooling airflow is based on the A/C selection shown in Fig. 47.
   The electronic air cleaner terminal EAC-1 is energized with 115 vac when the blower motor BLWM is operating. When the thermostat is satisfied, the R to G-and-Y circuits are opened. The outdoor unit will stop, and the furnace blower motor BLWM will continue operating at cooling airflow for an additional 90 seconds. Jumper Y/Y2 to DHUM to reduce the cooling off-delay to 5 seconds. (See Fig. 33.)
3. Single-Stage Thermostat and Two-Speed Cooling (Adaptive Mode)
   See Fig. 59 for thermostat connections.
   This furnace can operate a two-speed cooling unit with a single-stage thermostat because the furnace control CPU includes a programmed adaptive sequence of controlled operation, which selects low-cooling or high-cooling operation. This selection is based upon the stored history of the length of previous cooling period of the single-stage thermostat.

NOTE: The air conditioning relay disable jumper ACRDJ must be connected to enable the adaptive cooling mode in response to a call for cooling. (See Fig. 33.) When in place the furnace control CPU can turn on the air conditioning relay ACR to energize the Y/Y2 terminal and switch the outdoor unit to high-cooling.

The furnace control CPU can start up the cooling unit in either low- or high-cooling. If starting up in low-cooling, the furnace control CPU determines the low-cooling on-time (from 0 to 20 minutes) which is permitted before switching to high-cooling.

If the power is interrupted, the stored history is erased and the furnace control CPU will select low-cooling for up to 20 minutes and then energize the air conditioning relay ACR to energize the Y/Y2 terminal and switch the outdoor unit to high-cooling, as long as the thermostat continues to call for cooling. Subsequent selection is based on stored history of the thermostat cycle times.

The wall thermostat "calls for cooling", closing the R to G and- Y circuits. The R to Y1 circuit starts the outdoor unit on low-cooling speed, and the R to G-and-Y1 circuits starts the furnace blower motor BLWM at low-cooling airflow which is the true on-board CF selection as shown in Fig. 47.
If the furnace control CPU switches from low-cooling to high cooling, the furnace control CPU will energize the air conditioning relay ACR. When the air conditioning relay ACR is energized the R to Y1-and-Y2 circuits switch the outdoor unit to high-cooling speed, and the R to G-and-Y1- and-Y/Y2 circuits transition the furnace blower motor BLWM to high-cooling airflow. High-cooling airflow is based on the A/C selection shown in Fig. 47.

NOTE: When transitioning from low-cooling to high-cooling the outdoor unit compressor will shut down for 1 minute while the furnace blower motor BLWM transitions to run at high-cooling airflow.

The electronic air cleaner terminal EAC-1 is energized with 115 vac whenever the blower motor BLWM is operating.

When the thermostat is satisfied, the R to G-and-Y circuit are opened. The outdoor unit stops, and the furnace blower BLWM and electronic air cleaner terminal EAC-1 will remain energized for an additional 90 seconds. Jumper Y1 to DHUM to reduce the cooling off-delay to 5 seconds. (See Fig. 33.)

4. Two-Stage Thermostat and Two-Speed Cooling
   See Fig. 58 for thermostat connections.

NOTE: The air conditioning relay disable jumper ACRDJ must be disconnected to allow thermostat control of the outdoor unit staging. (See Fig. 33.)

The thermostat closes the R to G-and-Y1 circuits for low cooling or closes the R to G-and-Y1-and-Y2 circuits for high cooling. The R to Y1 circuit starts the outdoor unit on low cooling speed, and the R to G-and-Y1 circuit starts the furnace blower motor BLWM at low-cooling airflow which is the true on-board CF selection as shown in Fig. 47. The R to Y1-and-Y2 circuits start the outdoor unit on high-cooling speed, and the R to G-and-Y/Y2 circuits start the furnace blower motor BLWM at high-cooling airflow. High-cooling airflow is based on the A/C selection shown in Fig. 47.

The electronic air cleaner terminal EAC-1 is energized with 115 vac whenever the blower motor BLWM is operating.

When the thermostat is satisfied, the R to G-and-Y1 or R to G-and-Y1-and-Y2 circuits are opened. The outdoor unit stops, and the furnace blower BLWM and electronic air cleaner terminal EAC-1 will remain energized for an additional 90 seconds. Jumper Y1 to DHUM to reduce the cooling off-delay to 5 seconds. (See Fig. 33.)

Thermidistat Mode

See Fig. 52-55 for thermostat connections.

The dehumidification output, DHUM on the Thermidistat should be connected to the furnace control thermostat terminal DHUM. When there is a dehumidify demand, the DHUM input is activated, which means 24 vac signal is removed from the DHUM input terminal. In other words, the DHUM input logic is reversed. The DHUM input is turned ON when no dehumidify demand exists. Once 24 vac is detected by the furnace control on the DHUM input, the furnace control operates in Thermidistat mode. If the DHUM input is low for more than 48 hours, the furnace control reverts back to non-Thermidistat mode.

The cooling operation described above also applies to operation with a Thermidistat. The exceptions are listed below:

1. **Low cooling** – When the R to G-and-Y1 circuit is closed and there is a demand for dehumidification, the furnace blower motor BLWM will drop the blower airflow to 86% of low cooling airflow which is the true on-board CF selection as shown in Fig. 47.
2. **High cooling** – When the R to G-and Y/Y2 circuit is closed and there is a demand for dehumidification, the furnace blower motor BLWM will drop the blower airflow to 86% of high-cooling airflow. High-cooling airflow is based on the A/C selection shown in Fig. 47.
3. **Cooling off-delay** – When the "call for cooling" is satisfied and there is a demand for dehumidification, the cooling

blower-off delay is decreased from 90 seconds to 5 seconds.

Super Dehumidify Mode

Super-Dehumidify mode can only be entered if the furnace control is in the Thermidistat mode and there is a demand for dehumidification. The cooling operation described in item 4. above also applies to operation with a Thermidistat. The exceptions are listed below:

1. **Low cooling** – When the R to Y1 circuit is closed, R to G circuit is open, and there is a demand for dehumidification, the furnace blower motor BLWM will drop the blower airflow to 65% of low-cooling airflow for a maximum of 10 minutes each cooling cycle or until the R to G circuit closes or the demand for dehumidification is satisfied. Low-cooling airflow is the true on-board CF selection as shown in Fig. 47.
2. **High cooling** – When the R to Y/Y2 circuit is closed, R to G circuit is open, and there is a demand for dehumidification, the furnace blower motor BLWM will drop the blower airflow to 65% of high-cooling airflow for a maximum of 10 minutes each cooling cycle or until the R to G circuit closes or the demand for dehumidification is satisfied. High-cooling airflow is based on the A/C selection shown in Fig. 47.
3. **Cooling off-delay** – When the "call for cooling" is satisfied and there is a demand for dehumidification, the cooling blower-off delay is decreased from 90 seconds to 5 seconds.

Continuous Blower Mode

When the R to G circuit is closed by the thermostat, the blower motor BLWM will operate at continuous blower airflow. Continuous blower airflow selection is initially based on the CF selection shown in Fig. 47. Factory default is shown in Fig. 47. Terminal EAC-1 is energized as long as the blower motor BLWM is energized.

During a call for heat, the furnace control CPU will transition the blower motor BLWM to continuous blower airflow, low-heat airflow, or the mid-range airflow, whichever is lowest. The blower motor BLWM will remain ON until the main burners ignite then shut OFF and remain OFF for the blower-ON delay (60 seconds in medium heat, and 35 seconds in high-heat), allowing the furnace heat exchangers to heat up more quickly, then restarts at the end of the blower-ON delay period at low-heat, medium-heat, or high-heat airflow respectively.

The blower motor BLWM will revert to continuous-blower airflow after the heating cycle is completed. In high-heat, the furnace control CPU will drop the blower motor BLWM to low-heat airflow during the selected blower-OFF delay period before transitioning to continuous-blower airflow.

When the thermostat "calls for low-cooling", the blower motor BLWM will operate at low-cooling airflow. When the thermostat is satisfied, the blower motor BLWM will operate an additional 90 seconds at low-cooling airflow before transitioning back to continuous-blower airflow.

When the thermostat "calls for high-cooling", the blower motor BLWM will operate at high cooling airflow. When the thermostat is satisfied, the blower motor BLWM will operate an additional 90 seconds at high-cooling airflow before transitioning back to continuous-blower airflow.

When the R to G circuit is opened, the blower motor BLWM will continue operating for an additional 5 seconds, if no other function requires blower motor BLWM operation.

Continuous Blower Speed Selection from Thermostat

To select different continuous-blower airflows from the room thermostat, momentarily turn off the FAN switch or push button on the room thermostat for 1-3 seconds after the blower motor BLWM is operating. The furnace control CPU will shift the continuous-blower airflow from the factory setting to the next highest CF selection airflow as shown in Fig. 47. Momentarily turning off the FAN switch again at the thermostat will shift the continuous-blower airflow up one more increment. If you repeat this procedure enough you will eventually shift the continuous blower airflow to the lowest CF selection as shown in Fig. 47. The selection can be changed as many times as desired and is stored in the memory to be automatically used following a power interruption.

Heat Pump

See Fig. 54-57 for thermostat connections. When installed with a heat pump, the furnace control automatically changes the timing sequence to avoid long blower off times during demand defrost cycles. Whenever W/W1 is energized along with Y1 or Y/Y2, the furnace control CPU will transition to or bring on the blower motor BLWM at cooling airflow, low-heat airflow, or the mid-range airflow, whichever is lowest. The blower motor BLWM will remain on until the main burners ignite then shut OFF and remain OFF for 25 seconds before coming back on at heating airflow. When the W/W1 input signal disappears, the furnace control begins a normal inducer post-purge period while changing the blower airflow. If Y/Y2 input is still energized the furnace control CPU will transition the blower motor BLWM airflow to cooling airflow. If Y/Y2 input signal disappears and the Y1 input is still energized the furnace control CPU will transition the blower motor BLWM to low-cooling airflow. If both the Y1 and Y/Y2 signals disappear at the same time, the blower motor BLWM will remain on at low-heat airflow for the selected blower-OFF delay period. At the end of the blower-OFF delay, the blower motor BLWM will shut OFF unless G is still energized, in which case the blower motor BLWM will operate at continuous blower airflow.

Component Test

The furnace features a component test system to help diagnose a system problem in the case of a component failure. To initiate the component test procedure, ensure that there are no thermostat inputs to the control and all time delays have expired. Turn on setup switch SW1-6. (See Fig. 33)

NOTE: The component test feature will not operate if the control is receiving any thermostat signals or until all time delays have expired.

The component test sequence is as follows:

1. The furnace control CPU turns the inducer motor IDM ON at medium speed and keeps it ON through step 3.
2. After waiting 15 seconds the furnace control CPU turns the hot surface igniter ON for 15 seconds, then OFF.
3. The furnace control CPU then turns the blower motor BLWM ON at mid-range airflow for 15 seconds, then OFF.
4. After shutting the blower motor BLWM OFF the furnace control CPU shuts the inducer motor IDM OFF.

NOTE: The EAC terminals are energized when the blower is operating.

After the component test is completed , 1 or more status codes (11, 25, 41, or 42) will flash. See Service Label on blower access panel or Service/Status Code Instructions for explanation of status codes.

NOTE: To repeat component test, turn setup switch SW1-6 to OFF and then back ON.

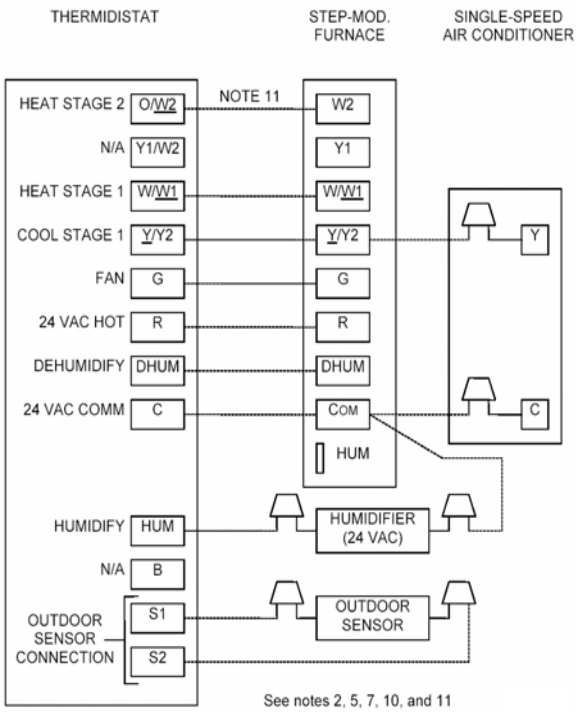

A06678

Fig. 52 - Step-Modulating Furnace with Single-Speed Air Conditioning

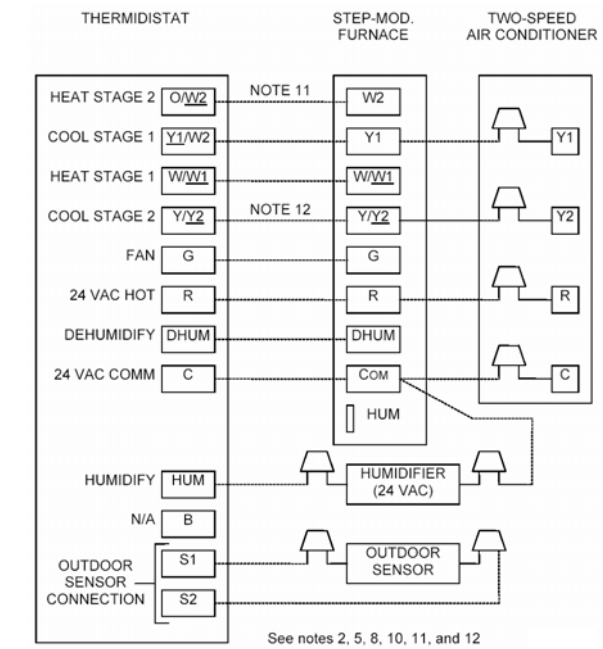

A06679

Fig. 53 - Step Modulating Furnace with Two-Speed Air Conditioner

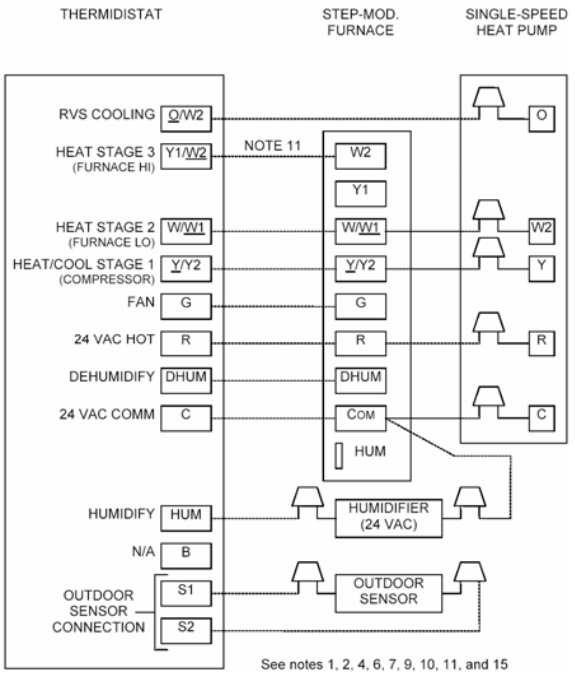

A06680

Fig. 54 - Step Modulating Furnace with Single-Speed Heat Pump (Dual Fuel)

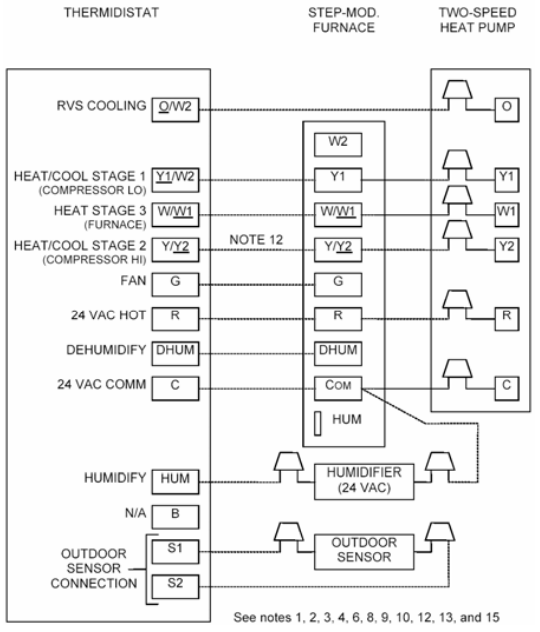

A06681

Fig. 55 - Step Modulating Furnace with Two-Speed Heat Pump (Dual Fuel)

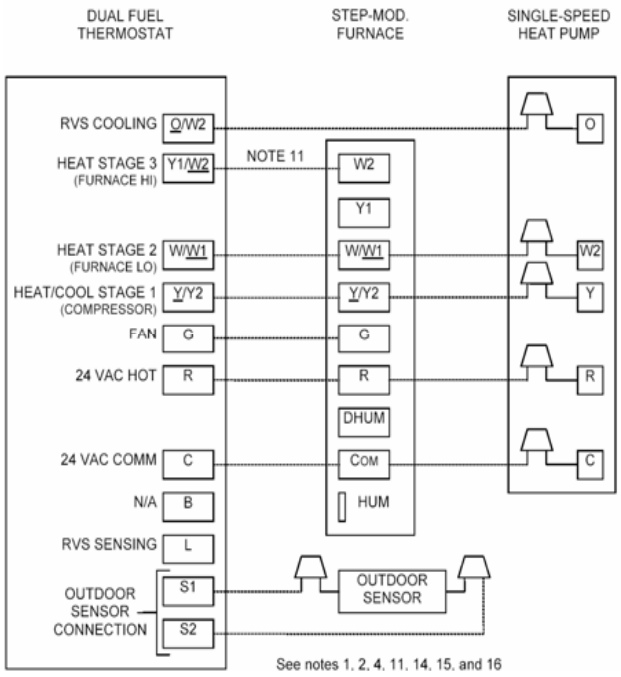

A06682

Fig. 56 - Step Modulating Furnace with Single-Speed Heat Pump

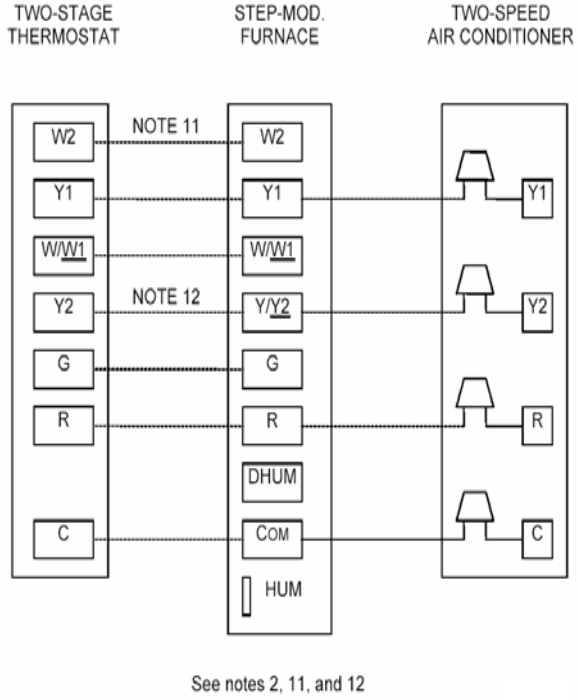

A06684

Fig. 58 - Two-Stage Thermostat with Step Modulating Furnace and Two-Speed Air Conditioner

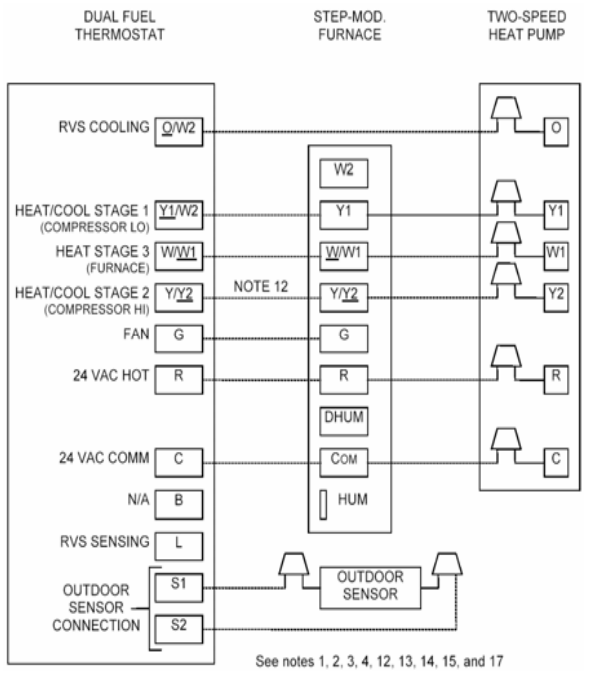

A06683

Fig. 57 - Dual Fuel thermostat with Step-Modulating Furnace and Two-Speed Heat Pump

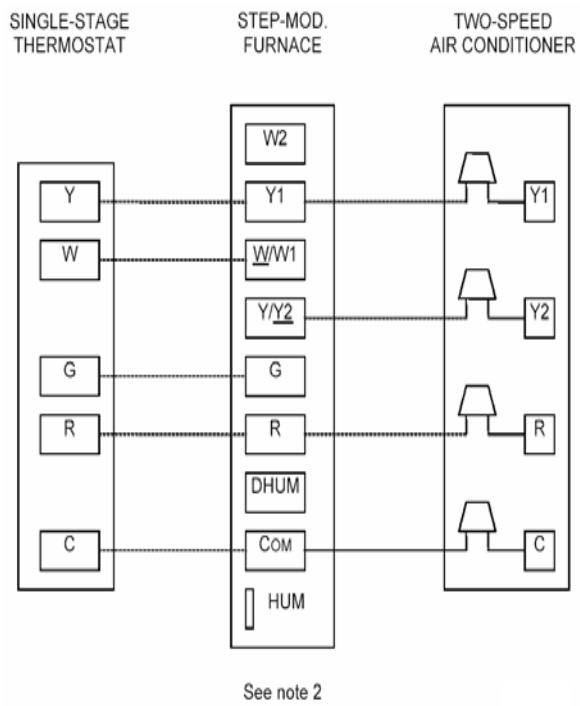

A06685

Fig. 59 - Single-Stage Thermostat with Step Modulating Furnace and Two-Speed Air Conditioner

NOTE: Reference Fig. 52-59:

1. Heat pump MUST have a high pressure switch for dual fuel applications.
2. Refer to outdoor equipment Installation Instructions for additional information and setup procedure.
3. Select the "ZONE" position on the two-speed heat pump control.
4. Outdoor Air Temperature Sensor must be attached in all dual fuel applications.
5. Dip switch No.1 on Thermidistat should be set in OFF position for air conditioner installations. This is factory default.
6. Dip switch No. 1 on Thermidistat should be set in ON position for heat pump installations.
7. Dip switch No. 2 on Thermidistat should be set in OFF position for single-speed compressor operation. This is factory default.
8. Dip switch No. 2 on Thermidistat should be set in ON position for two-speed compressor operation.
9. Configuration Option No. 10 "Dual Fuel Selection" must be turned ON in all dual fuel applications.
10. NO connection should be made to the furnace HUM terminal when using a Thermidistat.
11. Optional connection. If wire is connected to W2 on furnace control board, either dip switch SW1-2 or SW4-2 on furnace control should be set in ON position to allow Thermidistat/Thermostat to control furnace at 2 stages Low/High or Medium/High.
12. Optional connection. If wire is connected, ACRDJ jumper on furnace control should be removed to allow Thermidistat/Thermostat to control outdoor unit staging.
13. Furnace must control its own staging operation via furnace control algorithm. This is factory default.
14. The RVS Sensing terminal "L" should not be connected. This is internally used to sense defrost operation.
15. DO NOT SELECT the "FURNACE INTERFACE" or "BALANCE POINT" option on the two-speed heat pump control board. This is controlled internally by the Thermidistat/Dual Fuel Thermostat.
16. Dip switch D on Dual Fuel Thermostat should be set in OFF position for single-speed compressor operation. This is factory default.
17. Dip switch D on Dual Fuel Thermostat should be set in ON position for two-speed compressor operation.

Step 4 — Adjustments

Set Gas Input Rate

Furnace gas input rate on rating plate is for installations at altitudes up to 2000 ft. (609.6M).

In the USA., the input rating for altitudes above 2000 ft. (609.6M) must be reduced by 2 percent for each 1000 ft. (304.8M) above sea level.

In Canada, the input rating must be derated by 5 percent for altitudes of 2000 ft. (609.6M) to 4500 ft. (1371.6M) above sea level.

Adjust manifold pressure to obtain input rate.

Furnace input rate must be within +2 percent of input rate on furnace rating plate.

1. Determine natural gas orifice size and manifold pressure for correct input.
   a. Obtain average heat value (at installed altitude) from local gas supplier.
   b. Obtain average specific gravity from local gas supplier.
   c. Verify furnace model. Table 10 can only be used for model 355CAV Furnaces.
   d. Find installation altitude in Table 10.

NOTE: For Canadian altitudes of 2000 to 4500 ft. (609.6 to 1371.6M), use USA. altitudes of 2001 to 3000 ft. (609.6 to 914.4M) in Table 10.

   e. Find closest natural gas heat value and specific gravity in Table 10.
   f. Follow heat value and specific gravity lines to point of intersection to find orifice size and low-, medium-, and high-heat manifold pressure settings for proper operation.

EXAMPLE: 0 - 2000 ft. (0 - 609.6M) altitude
Heating value = 1050 Btu/cu ft.
Specific gravity = 0.62
Therefore: Orifice No. 45
Manifold pressure: 3.8-in. wc for high heat 1.6-in. wc for medium heat 0.6-in. wc for low heat
* Furnace is shipped with No. 45 orifices. In this example, all main burner orifices are the correct size and do not need to be changed to obtain proper input rate.

   g. Check and verify burner orifice size in furnace. NEVER ASSUME ORIFICE SIZE; ALWAYS CHECK AND VERIFY.

2. Adjust manifold pressure to obtain input rate.

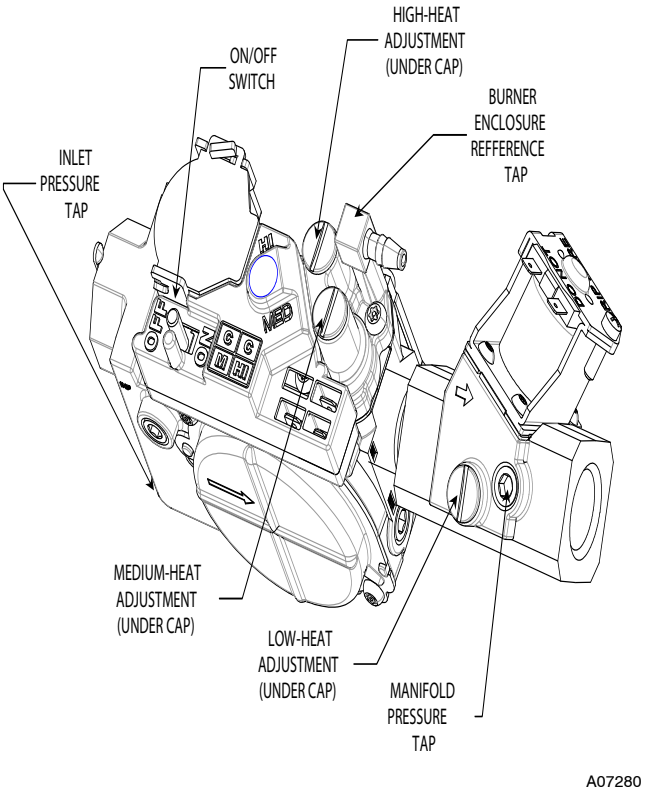

Fig. 60 - Redundant Automatic Gas Valve

   a. Remove burner enclosure front.

NOTE: Manifold pressure MUST always be measured with the burner box cover REMOVED.

   b. Remove regulator seal caps that conceal adjustment screws for medium- and high-heat gas valve regulators. (See Fig. 60.)
   c. Move setup switch SW4-2 on control center to ON position. (See Fig. 33.) This keeps furnace locked in medium-heat operation.

d. Jumper R and W/W1 thermostat connections on control to start furnace.

e. Turn medium-heat adjusting screw counterclockwise (out) to decrease manifold pressure or clockwise (in) to increase manifold pressure.

NOTE: DO NOT set medium-heat manifold pressure less than 1.3- in. wc or more than 1.7-in. wc for natural gas.

⚠ CAUTION

UNIT DAMAGE HAZARD

Failure to follow this caution may result in reduced furnace life.

DO NOT bottom out gas valve regulator adjusting screws. This can result in unregulated manifold pressure and result in excess over-fire and heat exchanger failures.

NOTE: If orifice hole appears damaged or it is suspected to have been redrilled, check orifice hole with a numbered drill bit of correct size. Never redrill an orifice. A burr-free and squarely aligned orifice hole is essential for proper flame characteristics. (See Fig. 61.)

f. Move setup switch SW4-2 to OFF position after completing medium-heat adjustment.

g. Jumper R and W/W1 and W2 thermostat connections on furnace control. (See Fig. 33.) This keeps furnace locked in high-heat operation.

h. Turn high-heat adjusting screw counterclockwise (out) to decrease manifold pressure or clockwise (in) to increase manifold pressure.

NOTE: DO NOT set high-heat manifold pressure less than 3.2-in. wc or more than 3.8-in. wc for natural gas.

i. Remove jumpers R to W/W1 and R to W2.

j. Wait for blower off-delay to finish then reset 115-v power to furnace.

k. Jumper R and W/W1 thermostat connections on control to start furnace.

l. Wait for the blower to turn ON then check low-heat manifold pressure. It should be between .5 to .6-in. wc. This setting should not require adjustment but if it does remove the low-heat adjustment cap (See Fig. 60) and turn the low-heat adjusting screw clockwise (in) to decrease manifold pressure or counterclockwise (out) to increase manifold pressure. You will only have 15 minutes to make an adjustment if needed. If you need more time then move setup switch SW1-2 on control center to ON position (See Fig. 33).

NOTE: DO NOT set low-heat manifold pressure before setting medium-heat manifold pressure. DO NOT set low-heat manifold pressure less than .5-in. wc or more than .6-in. wc for natural gas.

m. When correct manifold pressures are obtained, replace caps that conceal gas valve adjustment screws. Main burner flame should be clear blue, almost transparent. (See Fig. 62.)

n. Remove jumper across R and W/W1. If necessary move setup switch SW1-2 to the OFF position.

3. Verify natural gas input rate by clocking gas meter.

NOTE: Be sure all pressure tubing, combustion-air and vent pipes, and burner enclosure front are in place when checking input by clocking gas meter.

a. Calculate high-altitude adjustment (if required).
UNITED STATES
At altitudes above 2000 ft. (609.6M), this furnace has been approved for 2 percent derate for each 1000 ft. (304.8M) above sea level. See Table 11 for derate multiplier factor and example.
CANADA
At installation altitudes from 2000 to 4500 ft. (609.6 to 1371.6M), this furnace must be derated 5 percent by an authorized Gas Conversion Station or Dealer. To determine correct input rate for altitude, see example and use 0.95 as derate multiplier factor.
EXAMPLE: 80,000 BTUH HIGH-HEAT INPUT FURNACE INSTALLED AT 4,300 ft. (1310.6M).
Furnace Input Rate at Sea Level X Derate Multiplier Factor = Furnace Input Rate at Installation Altitude
80,000 X 0.91 = 72,800

b. Reinstall burner box cover.

NOTE: Clocking gas input rate MUST always be performed with the burner box cover INSTALLED.

c. Check that gas valve adjustment caps are in place for proper input to be clocked.

d. Obtain average heat value (at altitude) from local gas supplier.

NOTE: Be sure heating value of gas used for calculations is correct for your altitude. Consult local gas utility for altitude adjustment of gas heating value.

e. Check and verify orifice size in furnace. NEVER ASSUME THE ORIFICE SIZE. ALWAYS CHECK AND VERIFY.

f. Turn off all other gas appliances and pilots.

g. Move setup switch SW4-2 to ON position. (See Fig. 33.) This keeps furnace locked in medium-heat operation.

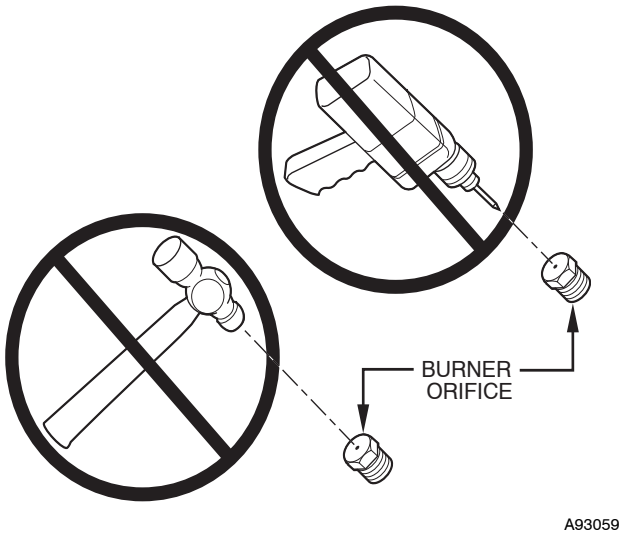

Fig. 61 - Burner Orifice

Table 10 – Orifice Size* and Manifold Pressures for Gas Input Rate
(Tabulated Data Based on 20,000 BTUH High Heat / 13,000 Btuh Med-Heat / 8,000 Btuh Low-Heat per Burner, Derated 2% / 1000 Ft. (304.8M) Above Sea Level)

ALTITUDE RANGE ft (m)		AVG. GAS HEAT VALUE AT ALTITUDE (Btu/cu ft)	SPECIFIC GRAVITY OF NATURAL GAS 0.58 Orifice No.	0.58 Mnfld Press High/Med/Low	0.60 Orifice No.	0.60 Mnfld Press High/Med/Low	0.62 Orifice No.	0.62 Mnfld Press High/Med/Low	0.64 Orifice No.	0.64 Mnfld Press High/Med/Low
U.S.A. and Canada		900	43	3.5 / 1.5 /0.55	43	3.6 / 1.5 /0.60	43	3.8 / 1.6 /0.60	42	3.2 / 1.3 /0.50
	0	925	44	3.8 / 1.6 /0.60	43	3.5 / 1.5 /0.55	43	3.6 / 1.5 /0.55	43	3.7 / 1.6 /0.60
	(0)	950	44	3.6 / 1.5 /0.60	44	3.8 / 1.6 /0.60	43	3.4 / 1.4 /0.55	43	3.5 / 1.5 /0.55
		975	44	3.4 / 1.5 /0.55	44	3.6 / 1.5 /0.55	44	3.7 / 1.6 /0.60	44	3.8 / 1.6 /0.60
	to	1000	44	3.3 / 1.4 /0.50	44	3.4 / 1.4 /0.55	44	3.5 / 1.5 /0.55	44	3.6 / 1.5 /0.60
		1025	**45**	**3.8 / 1.6 /0.60**	44	3.2 / 1.4 /0.50	44	3.3 / 1.4 /0.55	44	3.4 / 1.5 /0.55
	2000	1050	**45**	**3.6 / 1.5 /0.60**	**45**	**3.7 / 1.6 /0.60**	**45**	**3.8 / 1.6 /0.60**	44	3.3 / 1.4 /0.50
	(610)	1075	**45**	**3.4 / 1.4 /0.55**	**45**	**3.5 / 1.5 /0.55**	**45**	**3.7 / 1.5 /0.60**	**45**	**3.8 / 1.6 /0.60**
		1100	**45**	**3.3 / 1.4 /0.50**	**45**	**3.4 / 1.4 /0.55**	**45**	**3.5 / 1.5 /0.55**	**45**	**3.6 / 1.5 /0.60**
U.S.A. and Canada	U.S.A.	800	43	3.8 / 1.6 /0.60	42	3.2 / 1.4 /0.50	42	3.3 / 1.4 /0.55	42	3.5 / 1.5 /0.55
	2001 (611)	825	43	3.6 / 1.5 /0.55	43	3.7 / 1.6 /0.60	43	3.8 / 1.6 /0.60	42	3.2 / 1.4 /0.50
	to	850	43	3.4 / 1.4 /0.55	43	3.5 / 1.5 /0.55	43	3.6 / 1.5 /0.60	43	3.7 / 1.6 /0.60
	3000 (914)	875	44	3.7 / 1.5 /0.60	44	3.8 / 1.6 /0.60	43	3.4 / 1.4 /0.55	43	3.5 / 1.5 /0.55
		900	44	3.5 / 1.5 /0.55	44	3.6 / 1.5 /0.55	44	3.7 / 1.6 /0.60	44	3.8 / 1.6 /0.60
	Canada	925	44	3.3 / 1.4 /0.50	44	3.4 / 1.4 /0.55	44	3.5 / 1.5 /0.55	44	3.6 / 1.5 /0.60
	2001 (611)	950	**45**	**3.7 / 1.6 /0.60**	44	3.2 / 1.4 /0.50	44	3.3 / 1.4 /0.55	44	3.4 / 1.4 /0.55
	to	975	**45**	**3.6 / 1.5 /0.55**	**45**	**3.7 / 1.6 /0.60**	**45**	**3.8 / 1.6 /0.60**	44	3.2 / 1.4 /0.50
	4500 (1372)	1000	**45**	**3.4 / 1.4 /0.55**	**45**	**3.5 / 1.5 /0.55**	**45**	**3.6 / 1.5 /0.60**	**45**	**3.7 / 1.6 /0.60**
U.S.A. Only		775	43	3.7 / 1.6 /0.60	42	3.2 / 1.3 /0.50	42	3.3 / 1.4 /0.55	42	3.4 / 1.4 /0.55
	3001	800	43	3.5 / 1.5 /0.55	43	3.6 / 1.5 /0.60	43	3.8 / 1.6 /0.60	42	3.2 / 1.3 /0.50
	(915)	825	44	3.8 / 1.6 /0.60	43	3.4 / 1.4 /0.55	43	3.5 / 1.5 /0.55	43	3.7 / 1.5 /0.60
	to	850	44	3.6 / 1.5 /0.55	44	3.7 / 1.6 /0.60	44	3.8 / 1.6 /0.60	43	3.4 / 1.5 /0.55
		875	44	3.4 / 1.4 /0.55	44	3.5 / 1.5 /0.55	44	3.6 / 1.5 /0.60	44	3.7 / 1.6 /0.60
	4000	900	44	3.2 / 1.3 /0.50	44	3.3 / 1.4 /0.55	44	3.4 / 1.4 /0.55	44	3.5 / 1.5 /0.55
	(1219)	925	**45**	**3.7 / 1.5 /0.60**	**45**	**3.8 / 1.6 /0.60**	44	3.2 / 1.4 /0.50	44	3.3 / 1.4 /0.55
		950	**45**	**3.5 / 1.5 /0.55**	**45**	**3.6 / 1.5 /0.55**	**45**	**3.7 / 1.6 /0.60**	**45**	**3.8 / 1.6 /0.60**
U.S.A. Only		750	43	3.7 / 1.6 /0.60	43	3.8 / 1.6 /0.60	42	3.2 / 1.4 /0.50	42	3.3 / 1.4 /0.55
	4001	775	43	3.5 / 1.5 /0.55	43	3.6 / 1.5 /0.55	43	3.7 / 1.6 /0.60	43	3.8 / 1.6 /0.60
	(1220)	800	44	3.7 / 1.6 /0.60	43	3.4 / 1.4 /0.55	43	3.5 / 1.5 /0.55	43	3.6 / 1.5 /0.55
	to	825	44	3.5 / 1.5 /0.55	44	3.6 / 1.5 /0.60	44	3.7 / 1.6 /0.60	43	3.4 / 1.4 /0.55
		850	44	3.3 / 1.4 /0.55	44	3.4 / 1.4 /0.55	44	3.5 / 1.5 /0.55	44	3.6 / 1.5 /0.60
	5000	875	**45**	**3.8 / 1.6 /0.60**	44	3.2 / 1.4 /0.50	44	3.3 / 1.4 /0.55	44	3.4 / 1.5 /0.55
	(1524)	900	**45**	**3.6 / 1.5 /0.55**	**45**	**3.7 / 1.6 /0.60**	**45**	**3.8 / 1.6 /0.60**	44	3.2 / 1.4 /0.50
		925	**45**	**3.4 / 1.4 /0.55**	**45**	**3.5 / 1.5 /0.55**	**45**	**3.6 / 1.5 /0.60**	**45**	**3.7 / 1.6 /0.60**
U.S.A. Only		725	43	3.6 / 1.5 /0.60	43	3.8 / 1.6 /0.60	42	3.2 / 1.4 /0.50	42	3.3 / 1.4 /0.55
	5001	750	43	3.4 / 1.4 /0.55	43	3.5 / 1.5 /0.55	43	3.6 / 1.5 /0.60	43	3.8 / 1.6 /0.60
	(1525)	775	44	3.7 / 1.5 /0.60	44	3.8 / 1.6 /0.60	43	3.4 / 1.4 /0.55	43	3.5 / 1.5 /0.55
	to	800	44	3.4 / 1.5 /0.55	44	3.6 / 1.5 /0.55	44	3.7 / 1.6 /0.60	44	3.8 / 1.6 /0.60
		825	44	3.2 / 1.4 /0.50	44	3.3 / 1.4 /0.55	44	3.4 / 1.5 /0.55	44	3.6 / 1.5 /0.55
	6000	850	**45**	**3.7 / 1.6 /0.60**	**45**	**3.8 / 1.6 /0.60**	44	3.2 / 1.4 /0.50	44	3.4 / 1.4 /0.55
	(1829)	875	**45**	**3.5 / 1.5 /0.55**	**45**	**3.6 / 1.5 /0.55**	**45**	**3.7 / 1.6 /0.60**	**45**	**3.8 / 1.6 /0.60**
		900	**45**	**3.3 / 1.4 /0.50**	**45**	**3.4 / 1.4 /0.55**	**45**	**3.5 / 1.5 /0.55**	**45**	**3.6 / 1.5 /0.60**
U.S.A. Only		675	42	3.2 / 1.3 /0.50	42	3.3 / 1.4 /0.55	42	3.4 / 1.4 /0.55	42	3.5 / 1.5 /0.55
	6001	700	43	3.6 / 1.5 /0.55	43	3.7 / 1.6 /0.60	43	3.8 / 1.6 /0.60	42	3.3 / 1.4 /0.50
	(1830)	725	44	3.8 / 1.6 /0.60	43	3.5 / 1.5 /0.55	43	3.6 / 1.5 /0.55	43	3.7 / 1.6 /0.60
	to	750	44	3.6 / 1.5 /0.55	44	3.7 / 1.6 /0.60	44	3.8 / 1.6 /0.60	43	3.5 / 1.5 /0.55
		775	44	3.4 / 1.4 /0.55	44	3.5 / 1.5 /0.55	44	3.6 / 1.5 /0.55	44	3.7 / 1.6 /0.60
	7000	800	**45**	**3.8 / 1.6 /0.60**	44	3.3 / 1.4 /0.50	44	3.4 / 1.4 /0.55	44	3.5 / 1.5 /0.55
	(2133)	825	**45**	**3.6 / 1.5 /0.55**	**45**	**3.7 / 1.6 /0.60**	**45**	**3.8 / 1.6 /0.60**	44	3.3 / 1.4 /0.50
		850	**45**	**3.4 / 1.4 /0.55**	**45**	**3.5 / 1.5 /0.55**	**45**	**3.6 / 1.5 /0.60**	**45**	**3.7 / 1.6 /0.60**

* Orifice numbers shown in **BOLD** are factory-installed.

A08202

Table 10 – Orifice Size* and Manifold Pressures for Gas Input Rate (Continued)
(Tabulated Data Based on 20,000 BTUH High Heat / 13,000 Btuh Med–Heat / 8,000 Btuh Low–Heat per Burner, Derated 2% / 1000 Ft. (304.8M) Above Sea Level)

ALTITUDE RANGE ft (m)		AVG. GAS HEAT VALUE AT ALTITUDE (Btu/cu ft)	SPECIFIC GRAVITY OF NATURAL GAS							
			0.58		0.60		0.62		0.64	
			Orifice No.	Mnfld Press High/Med/Low	Orifice No.	Mnfld Press High/Med/Low	Orifice No.	Mnfld Press High/Med/Low	Orifice No.	Mnfld Press High/Med/Low
U.S.A. Only		**650**	43	3.8 / 1.6 /0.60	42	3.2 / 1.4 /0.50	42	3.4 / 1.4 /0.55	42	3.5 / 1.5 /0.55
	7001	**675**	43	3.5 / 1.5 /0.55	43	3.7 / 1.6 /0.60	43	3.8 / 1.6 /0.60	42	3.2 / 1.4 /0.50
	(2134)	**700**	44	3.8 / 1.6 /0.60	43	3.4 / 1.4 /0.55	43	3.5 / 1.5 /0.55	43	3.6 / 1.5 /0.60
	to	**725**	44	3.5 / 1.5 /0.55	44	3.6 / 1.5 /0.60	44	3.8 / 1.6 /0.60	43	3.4 / 1.4 /0.55
		750	44	3.3 / 1.4 /0.55	44	3.4 / 1.4 /0.55	44	3.5 / 1.5 /0.55	44	3.6 / 1.5 /0.60
	8000	**775**	**45**	**3.7 / 1.6 /0.60**	44	3.2 / 1.3 /0.50	44	3.3 / 1.4 /0.55	44	3.4 / 1.4 /0.55
	(2438)	**800**	**45**	**3.5 / 1.5 /0.55**	**45**	**3.6 / 1.5 /0.60**	**45**	**3.7 / 1.6 /0.60**	44	3.2 / 1.4 /0.50
		825	**45**	**3.3 / 1.4 /0.55**	**45**	**3.4 / 1.4 /0.55**	**45**	**3.5 / 1.5 /0.55**	**45**	**3.6 / 1.5 /0.60**
U.S.A. Only		**625**	43	3.8 / 1.6 /0.60	42	3.2 / 1.4 /0.50	42	3.3 / 1.4 /0.55	42	3.4 / 1.5 /0.55
	8001	**650**	43	3.5 / 1.5 /0.55	43	3.6 / 1.5 /0.60	43	3.8 / 1.6 /0.60	42	3.2 / 1.3 /0.50
	(2439)	**675**	44	3.7 / 1.6 /0.60	43	3.4 / 1.4 /0.55	43	3.5 / 1.5 /0.55	43	3.6 / 1.5 /0.60
	to	**700**	44	3.5 / 1.5 /0.55	44	3.6 / 1.5 /0.60	44	3.7 / 1.6 /0.60	44	3.8 / 1.6 /0.60
		725	44	3.2 / 1.4 /0.50	44	3.4 / 1.4 /0.55	44	3.5 / 1.5 /0.55	44	3.6 / 1.5 /0.55
	9000	**750**	**45**	**3.7 / 1.5 /0.60**	**45**	**3.8 / 1.6 /0.60**	44	3.2 / 1.4 /0.50	44	3.3 / 1.4 /0.55
	(2743)	**775**	**45**	**3.4 / 1.5 /0.55**	**45**	**3.6 / 1.5 /0.55**	**45**	**3.7 / 1.6 /0.60**	**45**	**3.8 / 1.6 /0.60**
U.S.A. Only	**9001**	**600**	43	3.8 / 1.6 /0.60	42	3.2 / 1.4 /0.50	42	3.3 / 1.4 /0.55	42	3.4 / 1.4 /0.55
	(2744)	**625**	43	3.5 / 1.5 /0.55	43	3.6 / 1.5 /0.60	43	3.7 / 1.6 /0.60	43	3.8 / 1.6 /0.60
	to	**650**	44	3.7 / 1.6 /0.60	44	3.8 / 1.6 /0.60	43	3.4 / 1.5 /0.55	43	3.6 / 1.5 /0.55
		675	44	3.4 / 1.4 /0.55	44	3.5 / 1.5 /0.55	44	3.7 / 1.5 /0.60	44	3.8 / 1.6 /0.60
	10000	**700**	44	3.2 / 1.3 /0.50	44	3.3 / 1.4 /0.55	44	3.4 / 1.4 /0.55	44	3.5 / 1.5 /0.55
	(3048)	**725**	**45**	**3.6 / 1.5 /0.55**	**45**	**3.7 / 1.6 /0.60**	**45**	**3.8 / 1.6 /0.60**	44	3.3 / 1.4 /0.50

* Orifice numbers shown in **BOLD** are factory-installed.

A08203

⚠ CAUTION

UNIT DAMAGE HAZARD

Failure to follow this caution may result in component damage.

DO NOT redrill orifices. Improper drilling (burrs, out-of-round holes, etc.) can cause excessive burner noise and misdirection of burner flames. (See Fig. 61.)

h. Jumper R to W/W1.

i. Let furnace run for 3 minutes in medium-heat operation.

j. Measure time (in sec) for gas meter to complete 1 revolution. Note reading.

k. Refer to Table 12 for cubic ft. of gas per hr.

l. Multiply gas rate cu ft/hr by heating value (Btu/cu ft).

m. Move setup switch SW4-2 to OFF position and jumper R and W/W1 and W2 thermostat connections. (See Fig. 33.) This keeps furnace locked in high-heat operation. Repeat items i through l for high-heat operation.

EXAMPLE: High-heat operation at 0 - 2000 ft. (0-609.6M) altitude
Furnace input from rating plate is 80,000 Btuh
Btuh heating input = Btuh/cu ft. X cu ft/hr
Heating value of gas = 975 Btuh/cu ft.
Time for 1 revolution of 2-cu ft. dial = 88 sec
Gas rate = 82 cu ft/hr (from Table 12)
Btuh heating input = 103 X 975 = 79,950 Btuh

In this example, the orifice size and manifold pressure adjustment is within +/- 2 percent of the furnace input rate.

n. Remove jumper across R, W/W1, and W2 thermostat connections to terminate call for heat.

o. Wait for blower off-delay to finish then reset 115-v power to furnace.

p. Wait for blower off-delay to finish then reset 115-v power to furnace.

q. Jumper R and W/W1 thermostat connections on control to start furnace.

r. Wait for the blower to turn ON then repeat items i through l for low-heat operation. This setting should not require adjustment but if it does you will only have 15 minutes to make the adjustment. If you need more time then move setup switch SW1-2 on control center to ON position (See Fig. 33).

NOTE: Measured gas inputs (high heat, medium heat, and low heat) must be within +/-2 percent of that stated on furnace rating plate when installed at sea level or derated as stated above when installed at higher altitudes.

Table 11 – Altitude Derate Multiplier for USA

ALTITUDE FT (M)	% OF DERATE	DERATE MULTIPLIER FACTOR FOR USA.*
0—2000 (0—610)	0	1.00
2001—3000 (610—914)	4—6	0.95
3001—4000 (914—1219)	6—8	0.93
4001—5000 (1219—1524)	8—10	0.91
5001—6000 (1524—1829)	10—12	0.89
6001—7000 (1829—2134)	12—14	0.87
7001—8000 (2134—2438)	14—16	0.85
8001—9000 (2438—2743)	16—18	0.83
9001—10,000 (2743—3048)	18—20	0.81

*Derate multiplier factor is based on midpoint altitude for altitude range.

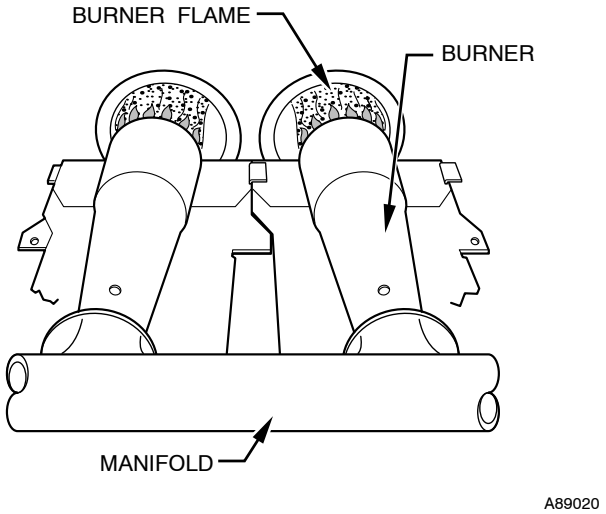

Fig. 62 - Burner Flame

Table 12 – Gas Rate cu Ft/Hr

SECONDS FOR 1 REVOLUTION	SIZE OF TEST DIAL			SECONDS FOR 1 REVOLUTION	SIZE OF TEST DIAL		
	1 cu ft.	2 cu ft.	5 cu ft.		1 cu ft.	2 cu ft.	5 cu ft.
10	360	720	1800	50	72	144	360
11	327	655	1636	51	71	141	355
12	300	600	1500	52	69	138	346
13	277	555	1385	53	68	136	340
14	257	514	1286	54	67	133	333
15	240	480	1200	55	65	131	327
16	225	450	1125	56	64	129	321
17	212	424	1059	57	63	126	316
18	200	400	1000	58	62	124	310
19	189	379	947	59	61	122	305
20	180	360	900	60	60	120	300
21	171	343	857	62	58	116	290
22	164	327	818	64	56	112	281
23	157	313	783	66	54	109	273
24	150	300	750	68	53	106	265
25	144	288	720	70	51	103	257
26	138	277	692	72	50	100	250
27	133	267	667	74	48	97	243
28	129	257	643	76	47	95	237
29	124	248	621	78	46	92	231
30	120	240	600	80	45	90	225
31	116	232	581	82	44	88	220
32	113	225	563	84	43	86	214
33	109	218	545	86	42	84	209
34	106	212	529	88	41	82	205
35	103	206	514	90	40	80	200
36	100	200	500	92	39	78	196
37	97	195	486	94	38	76	192
38	95	189	474	96	38	75	188
39	92	185	462	98	37	74	184
40	90	180	450	100	36	72	180
41	88	176	439	102	35	71	178
42	86	172	429	104	35	69	173
43	84	167	419	106	34	68	170
44	82	164	409	108	33	67	167
45	80	160	400	110	33	65	164
46	78	157	391	112	32	64	161
47	76	153	383	116	31	62	155
48	75	150	375	120	30	60	150
49	73	147	367				

Set Temperature Rise

⚠ CAUTION

UNIT DAMAGE HAZARD

Failure to follow this caution may result in component damage.

Temperature rise must be within limits specified on unit rating plate. Operation is within a few degrees of midpoint of rise range when setup switch SW1-4 is OFF.

Furnace must operate within ranges of temperature rise specified on the furnace rating plate. Determine air temperature rise as follows:

1. Place thermometers in return and supply ducts as near furnace as possible. Be sure thermometers do not see heat exchanger so that radiant heat does not affect readings. This practice is particularly important with straight-run ducts.
2. When thermometer readings stabilize, subtract return-air temperature from supply-air temperature to determine air temperature rise.

NOTE: Temperature rise can be determined for low-heat operation by placing setup switch SW1-2 on furnace control in ON position. Temperature rise can be determined for medium-heat operation by placing setup switch SW4-2 on furnace control in ON position. For high-heat operation, place setup switch SW1-2 and SW4-2 in OFF position and jumper R-W2 on furnace control. DO NOT forget to return setup switch to OFF position and remove R-W2 jumper upon completion of testing. (See Fig. 33 for switch and terminal location.)

3. This furnace is capable of automatically providing proper airflow to maintain the temperature rise within the range specified on furnace rating plate. If temperature rise is outside this range, proceed as follows:
   a. Check gas input for low-, medium-, and high-heat operation.
   b. Check derate for altitude if applicable.
   c. Check all return and supply ducts for excessive restrictions causing static pressure greater than 0.5-in. wc.
   d. Ensure Low Heat Rise Adjust switch SW1-3 on furnace control is in ON position when a bypass humidifier is used. (See Fig. 33 for switch location.)
   e. Check Troubleshooting Guide for Variable-Speed Step Modulating Condensing Furnaces.

Set Thermostat Heat Anticipator

When using a non-electronic thermostat, the thermostat heat anticipator must be set to match the amp draw of components in the R-W/W1 circuit. Accurate amp draw measurements can be obtained only at the thermostat subbase terminals R and W.

The thermostat and anticipator should NOT be in the circuit while measuring current. If thermostat has no subbase, the thermostat must be disconnected from R and W/W1 wires during current measurement.

Fig. 63 illustrates an easy method of obtaining thermostat amp draw measurements. The amp reading should be taken after blower motor has started and furnace is operating in low-heat.

1. To operate furnace in low-heat, turn setup switch SW1-2 to ON position (See Fig. 33) and connect ammeter leads across thermostat subbase R-W.
2. See thermostat manufacturer's instructions for adjusting the heat anticipator and for varying heating cycle length.

NOTE: When using an electronic thermostat, set cycle rate for 3 cycles per hr.

3. Return setup switch SW1-2 to OFF position and replace thermostat on subbase.

Check Safety Controls

This section covers the safety controls that must be checked before the installation is complete. The flame sensor, gas valve, and pressure switches were all checked in the Start-up procedure section as part of normal operation.

Check Primary Limit Control

This control shuts off the gas control system and energizes the air-circulating blower motor if furnace overheats.

1. The recommended method of checking this limit control is to gradually block off return air after furnace has been operating for a period of at least 5 minutes.
2. As soon as limit control has shut off burners, a status code 33 will appear on furnace control.
3. The return-air opening should be unblocked to permit normal air circulation.

By using this method to check the limit control, it can be established that the limit is functioning properly and the furnace will operate safely if there is a restricted return-air duct or motor failure. If the limit control does not function during this test, the cause must be determined and corrected.

Check Pressure Switches

This control proves operation of the draft inducer. Check switch operation as follows:

1. Turn off 115-v power to furnace.
2. Remove control access door and disconnect inducer motor 12-pin wire harness at inducer motor.
3. Turn on 115-v power to furnace.
4. Set thermostat to "call for heat." When pressure switches are functioning properly, status code 42 will flash on furnace control approximately 20 sec after thermostat switch is closed. If either a status code 31 or 32 is flashed when inducer motor is disconnected, the furnace will shut itself down immediately. Determine the reason pressure switches did not function properly and correct the condition.
5. Turn off 115-v power to furnace.
6. Reconnect inducer motor wire harness. Reinstall furnace access door.
7. Turn on 115-v power to furnace.
8. Reset thermostat to desired temperature.

CHECKLIST

1. Put away tools and instruments. Clean up debris.
2. Verify flame rollout manual reset switch has continuity.
3. Verify that blower and main access doors are properly installed.
4. Cycle test furnace with room thermostat.
5. Check operation of accessories per manufacturer's instructions.
6. Review User's Manual with owner.
7. Leave literature packet near furnace.

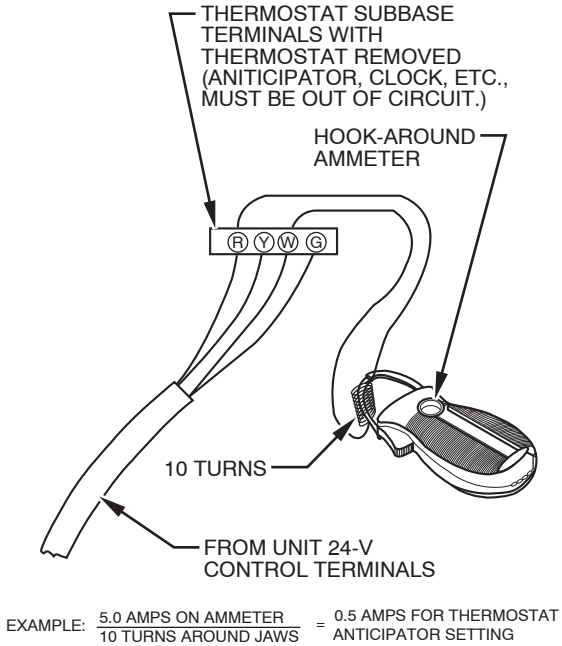

A96316

Fig. 63 - Amp Draw with Ammeter

CHECKLIST — INSTALLATION

LOAD CALCULATION

_____ Heating Load (Btuh)

_____ Cooling Load (Btuh)

_____ Furnace Model Selection

COMBUSTION AND VENT PIPING

Termination Location

_____ Vent

_____ Roof

_____ Sidewall

_____ Combustion–Air

_____ Roof

_____ Sidewall

_____ Attic

_____ Crawl Space

_____ Termination Kit–2 Pipe or Concentric

_____ Combustion–Air Pipe Length

_____ Combustion–Air Pipe Elbow Quantity

_____ Vent Pipe Length

_____ Vent Pipe Elbow Quantity

_____ Pipe Diameter Determined from Sizing Table

_____ Pipe Sloped To Furnace

Pipe Insulation

_____ Over Ceilings

_____ Low–Ambient Exposed Pipes

Condensate Drain

_____ Unit Level or Pitched Forward

_____ Internal Tubing Connections Free of Kinks and Traps

_____ External Drain Connection Leak Tight and Sloped

_____ Condensate Trap Primed before Start–Up

Heat Tape Installed if Required

CHECKLIST – START–UP

_____ Gas Input Rate (Set Within 2 percent of Rating Plate)

_____ Temperature Rise Adjusted

Thermostat Anticipator

_____ Anticipator Setting Adjusted or

_____ Cycle Rate (3 Cycles per Hr) Selected

Safety Controls Check Operation

CHECKLIST – START–UP

_____ Gas Input Rate (Set Within 2 percent of Rating Plate)

_____ Temperature Rise Adjusted

Thermostat Anticipator

_____ Anticipator Setting Adjusted or

_____ Cycle Rate (3 Cycles per Hr) Selected

Safety Controls Check Operation

_____ Primary Limit

_____ Pressure Switches

©2009 Bryant Heating & Cooling Systems ● 7310 W. Morris St. ● Indianapolis, IN 46231 Printed in U.S.A. Edition Date: 12/09 **Catalog No. II355CAV–060–5**

Manufacturer reserves the right to discontinue, or change at any time, specifications or designs without notice and without incurring obligations. Replaces: II355CAV–060–4