**PG95ESU**
**SINGLE-STAGE, UPFLOW/HORIZONTAL**
**ULTRA LOW NOX, 35-IN. TALL**
**CONDENSING GAS FURNACE**

# Installation, Start-up, Operating and Service and Maintenance Instructions

**NOTE**: Read the entire instruction manual before starting the installation.

## SECTIONS


SAFETY CONSIDERATIONS . . . . . 4
INTRODUCTION . . . . . 5
CODES AND STANDARDS . . . . . 6
ELECTROSTATIC DISCHARGE (ESD) PRECAUTIONS . . . 7
ACCESSORIES . . . . . 7
LOCATION . . . . . 7
AIR FOR COMBUSTION AND VENTILATION . . . . . 8
CONDENSATE TRAP . . . . . 11
CONDENSATE DRAIN . . . . . 11
INSTALLATION . . . . . 12
AIR DUCTS . . . . . 23
GAS PIPING . . . . . 23
ELECTRICAL CONNECTIONS . . . . . 25
VENTING . . . . . 29
START-UP, ADJUSTMENT, AND SAFETY CHECK . . . . . 47
SERVICE AND MAINTENANCE PROCEDURES . . . . . 52
WINTERIZATION . . . . . 58
SEQUENCE OF OPERATION . . . . . 59
PARTS REPLACEMENT GUIDE . . . . . 62


## TABLES


Loose Parts Bag . . . . . 5
Minimum Clearances to Combustible Materials . . . . . 5
Minimum Free Area Required . . . . . 10
Minimum Space Volumes . . . . . 10
Filter Size Information . . . . . 21
Opening Dimensions . . . . . 21
Air Delivery CFM . . . . . 22
Maximum Capacity of Pipe . . . . . 24
Electrical Data . . . . . 28
Vent Termination Kit for Direct Vent (2-Pipe) System . . . . . 30
Hangar Spacing . . . . . 36
Combustion-Air Vent Pipe, Fitting & Cement Material.. . . . . 39
Maximum Allowable Exposed Vent Lengths Insulation . . . . . 40
Maximum Equivalent Vent Length . . . . . 40
Deductions from Maximum Equivalent Vent Length . . . . . 40
Altitude Derate Multiplier for U.S.A. . . . . 48
Orifice Size and Manifold Pressure . . . . . 48
Gas Rate . . . . . 50
Blower Off Delay Setup Switch . . . . . 60


**Approved for installations up to 5,400 feet (1646 meters)**

ISO 9001 Quality

Use of the AHRI Certified TM Mark indicates a manufacturer's participation in the program. For verification of certification for individual products, go to www.ahridirectory.org .


Portions of the text and tables are reprinted from NFPA 54/ANSI Z223.1©, with permission of National Fire Protection Association, Quincy, MA 02269 and American Gas Association, Washington DC 20001. This reprinted material is not the complete and official position of the NFPA or ANSI on the referenced subject, which is represented only by the standard in its entirety.

## Required Notice for Massachusetts Installations

# IMPORTANT

The Commonwealth of Massachusetts requires compliance with regulation 248 CMR as follows:

5.08: Modifications to NFPA-54, Chapter 10

2) Revise 10.8.3 by adding the following additional requirements:

a. For all side wall horizontally vented gas fueled equipment installed in every dwelling, building or structure used in whole or in part for residential purposes, including those owned or operated by the Commonwealth and where the side wall exhaust vent termination is less than seven (7) feet above finished grade in the area of the venting, including but not limited to decks and porches, the following requirements shall be satisfied:

1. INSTALLATION OF CARBON MONOXIDE DETECTORS. At the time of installation of the side wall horizontal vented gas fueled equipment, the installing plumber or gasfitter shall observe that a hard wired carbon monoxide detector with an alarm and battery back-up is installed on the floor level where the gas equipment is to be installed. In addition, the installing plumber or gasfitter shall observe that a battery operated or hard wired carbon monoxide detector with an alarm is installed on each additional level of the dwelling, building or structure served by the side wall horizontal vented gas fueled equipment. It shall be the responsibility of the property owner to secure the services of qualified licensed professionals for the installation of hard wired carbon monoxide detectors

   a. In the event that the side wall horizontally vented gas fueled equipment is installed in a crawl space or an attic, the hard wired carbon monoxide detector with alarm and battery back-up may be installed on the next adjacent floor level.

   b. In the event that the requirements of this subdivision can not be met at the time of completion of installation, the owner shall have a period of thirty (30) days to comply with the above requirements; provided, however, that during said thirty (30) day period, a battery operated carbon monoxide detector with an alarm shall be installed.

2. APPROVED CARBON MONOXIDE DETECTORS. Each carbon monoxide detector as required in accordance with the above provisions shall comply with NFPA 720 and be ANSI/UL 2034 listed and IAS certified.

3. SIGNAGE. A metal or plastic identification plate shall be permanently mounted to the exterior of the building at a minimum height of eight (8) feet above grade directly in line with the exhaust vent terminal for the horizontally vented gas fueled heating appliance or equipment. The sign shall read, in print size no less than one-half (1/2) inch in size, ”GAS VENT DIRECTLY BELOW. KEEP CLEAR OF ALL OBSTRUCTIONS”.

4. INSPECTION. The state or local gas inspector of the side wall horizontally vented gas fueled equipment shall not approve the installation unless, upon inspection, the inspector observes carbon monoxide detectors and signage installed in accordance with the provisions of 248 CMR 5.08(2)(a)1 through 4.

5. EXEMPTIONS: The following equipment is exempt from 248 CMR 5.08(2)(a)1 through 4:

   (1.) The equipment listed in Chapter 10 entitled ”Equipment Not Required To Be Vented” in the most current edition of NFPA 54 as adopted by the Board; and

   (2.) Product Approved side wall horizontally vented gas fueled equipment installed in a room or structure separate from the dwelling, building or structure used in whole or in part for residential purposes.

c. MANUFACTURER REQUIREMENTS - GAS EQUIPMENT VENTING SYSTEM PROVIDED. When the manufacturer of Product Approved side wall horizontally vented gas equipment provides a venting system design or venting system components with the equipment, the instructions provided by the manufacturer for installation of the equipment and the venting system shall include:

1. Detailed instructions for the installation of the venting system design or the venting system components; and
2. A complete parts list for the venting system design or venting system.

d. MANUFACTURER REQUIREMENTS - GAS EQUIPMENT VENTING SYSTEM NOT PROVIDED. When the manufacturer of a Product Approved side wall horizontally vented gas fueled equipment does not provide the parts for venting the flue gases, but identifies “special venting systems”, the following requirements shall be satisfied by the manufacturer:

1. The referenced “special venting system” instructions shall be included with the appliance or equipment installation instructions; and
2. The “special venting systems” shall be Product Approved by the Board, and the instructions for that system shall include a parts list and detailed installation instructions.

e. A copy of all installation instructions for all Product Approved side wall horizontally vented gas fueled equipment, all venting instructions, all parts lists for venting instructions, and/or all venting design instructions shall remain with the appliance or equipment at the completion of the installation.

For questions regarding these requirements, please contact the Commonwealth of Massachusetts Board of State Examiners of Plumbers and Gas Fitters, 239 Causeway Street, Boston, MA 02114. 617-727-9952.

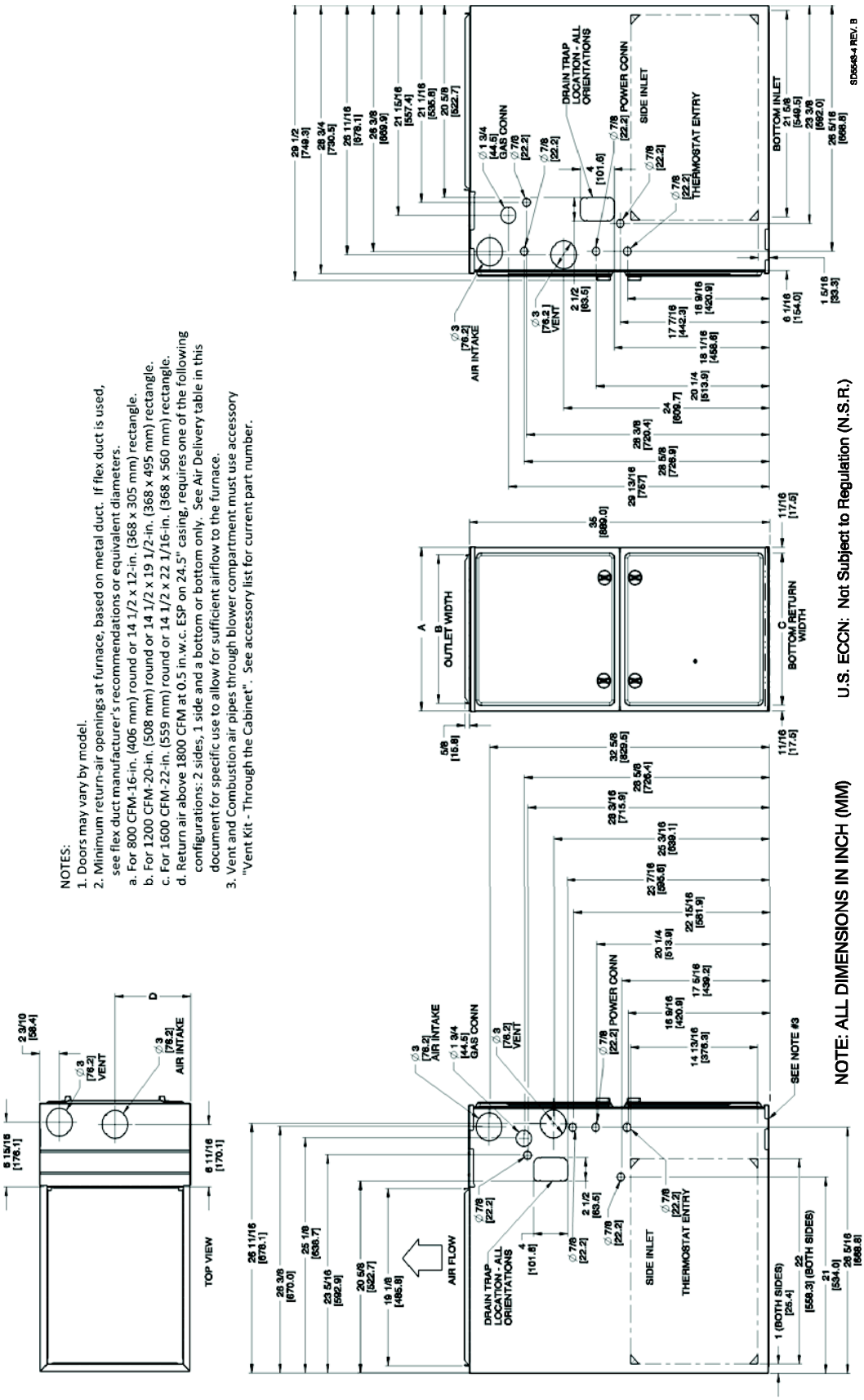


A190253

| FURNACE SIZE | A | B | C | D | SHIP WT. LB (KG) |
|---|---|---|---|---|---|
| | CABINET WIDTH | OUTLET WIDTH | BOTTOM INLET WIDTH | AIR INTAKE | |
| 48060B | 17–1/2 (445) | 15–7/8 (403) | 16 (406) | 8–3/4 (222) | 149.4 (67.8) |
| 60080C | 21 (533) | 19–3/8 (492) | 19–1/2 (495) | 10–1/2 (267) | 167.4 (75.9) |
| 60100C | 21 (533) | 19–3/8 (492) | 19–1/2 (495) | 10–1/2 (267) | 174.4 (79.1) |

**Fig. 1 - Dimensional Drawing**

## SAFETY CONSIDERATIONS

**⚠ WARNING**

**FIRE, EXPLOSION, ELECTRICAL SHOCK, AND CARBON MONOXIDE POISONING HAZARD**
Failure to follow this warning could result in dangerous operation, personal injury, death, or property damage.
Improper installation, adjustment, alteration, service, maintenance, or use can cause carbon monoxide poisoning, explosion, fire, electrical shock, or other conditions which may cause personal injury or property damage. Consult a qualified service agency, local gas supplier, or your distributor or branch for information or assistance. The qualified service agency must use only factory-authorized and listed kits or accessories when modifying this product.

**⚠ WARNING**

**FIRE, EXPLOSION, ELECTRICAL SHOCK, AND CARBON MONOXIDE POISONING HAZARD**
Failure to follow this warning could result in dangerous operation, personal injury, death, or property damage.
Furnaces shall NOT be twinned. These furnaces are not approved for installation in recreational vehicles, outdoors or in manufactured/mobile homes.

**⚠ WARNING**

**FIRE HAZARD**
Failure to follow this warning could result in personal injury, death, or property damage.
Solvents, cements and primers are combustible. Keep away from heat, sparks and open flame. Use only in well-ventilated areas. Avoid breathing in vapor or allowing contact with skin or eyes.

**⚠ CAUTION**

**FURNACE RELIABILITY HAZARD**
Failure to follow this caution may result in unit component damage.
Application of this furnace should be indoors with special attention given to vent sizing and material, gas input rate, air temperature rise, unit leveling, and unit sizing.

Improper installation, adjustment, alteration, service, maintenance, or use can cause explosion, fire, electrical shock, or other conditions which may cause death, personal injury, or property damage. Consult a qualified installer, service agency, or your distributor or branch for information or assistance. The qualified installer or agency must use factory-authorized kits or accessories when modifying this product. Refer to the individual instructions packaged with the kits or accessories when installing.

Installing and servicing heating equipment can be hazardous due to gas and electrical components. **Only trained and qualified personnel should install, repair, or service heating equipment.** Untrained personnel can perform basic maintenance functions such as cleaning and replacing air filters. All other operations must be performed by trained service personnel. When working on heating equipment, observe precautions in literature, on tags, and on labels attached to or shipped with furnace and other safety precautions that may apply.

These instructions cover minimum requirements and conform to existing national standards and safety codes. In some instances, these instructions exceed certain local codes and ordinances, especially those that may not have kept up with changing residential construction practices. We require these instructions as a minimum for a safe installation.

Follow all safety codes. Wear safety glasses, protective clothing, and work gloves. Have a fire extinguisher available. Read these instructions thoroughly and follow all warnings or cautions included in literature and attached to the unit.

**⚠ CAUTION**

**CUT HAZARD**

Failure to follow this caution may result in personal injury.

Sheet metal parts may have sharp edges or burrs. Use care and wear appropriate protective clothing, safety glasses and gloves when handling parts, and servicing furnaces.

This is the safety-alert symbol ⚠. When you see this symbol on the furnace and in instructions or manuals, be alert to the potential for personal injury.

Understand the signal words **DANGER**, **WARNING**, and **CAUTION**. These words are used with the safety-alert symbol. **DANGER** identifies the most serious hazards which **will** result in severe personal injury or death. **WARNING** signifies a hazard which **could** result in personal injury or death. **CAUTION** is used to identify hazards which **may** result in minor personal injury or product and property damage. **NOTE** and **NOTICE** are used to highlight suggestions which will result in enhanced installation, reliability, or operation.

1. Use only with type of gas approved for this furnace. Refer to the furnace rating plate.
2. Install this furnace only in a location and position as specified in the “Location” section of these instructions.
3. Provide adequate combustion and ventilation air to the furnace space as specified in “Air for Combustion and Ventilation” section.
4. Combustion products must be discharged outdoors. Connect this furnace to an approved vent system only, as specified in the “Venting” section of these instructions.
5. Never test for gas leaks with an open flame. Use a commercially available soap solution made specifically for the detection of leaks to check all connections, as specified in the “Gas Piping” section.
6. Always install furnace to operate within the furnace’s intended temperature-rise range with a duct system which has an external static pressure within the allowable range, as specified in the “Start-Up, Adjustments, and Safety Check” section. See furnace rating plate.
7. When a furnace is installed so that supply ducts carry air circulated by the furnace to areas outside the space containing the furnace, the return air shall also be handled by duct(s) sealed to the furnace casing and terminating outside the space containing the furnace. See “Air Ducts” section.
8. A gas-fired furnace for installation in a residential garage must be installed as specified in the warning box in the “Location” section.
9. The furnace is not permitted to be used for heating of buildings under construction.
10. These Upflow/Horizontal Gas-Fired Furnaces are CSA design-certified for use with natural gas (see furnace rating plate) and for installation in alcoves, attics, basements, closets, utility rooms, crawlspaces, and garages. The furnace is factory-shipped for use with natural gas and cannot be converted to propane gas.
11. For required clearances to combustible construction (Table 1). Ensure sufficient clearance for furnace condensate trap installation. See Location and Condensate Trap sections for required and recommended clearances (Fig. 6 And Fig. 7).

**Table 1 – Minimum Clearances to Combustible Materials for All Units**

| POSITION | CLEARANCE |
|---|---|
| REAR | 1 in. |
| FRONT (Combustion air openings in furnace and in structure) | 1 in. |
| Required for service | 24 in.* |
| All Sides of Supply Plenum | 1 in. |
| Sides | 1 in. ** |
| Vent | 0 |
| Top of Furnace | 1 in. |

* Consult local building codes.
** Additional clearance is required for condensate trap installation.

**NOTE**: Furnace edge contact is permissible with combustible materials unless local codes state otherwise.

12. Maintain a 1-in. (25 mm) clearance from combustible materials to supply air ductwork for a distance of 36 in. (914 mm) horizontally from the furnace. See NFPA 90B or local code for further requirements.
13. These furnaces SHALL NOT be installed directly on carpeting, combustible tile, or any other combustible material other than wood flooring. Clearance to combustible construction information (Table 1).

# NOTICE

**Important Installation and Start-up Procedures**

Failure to follow this procedure may result in a nuisance smoke or odor complaint.

The manifold pressure, gas rate by meter clocking, temperature rise and operation must be checked after installation. Minor smoke and odor may be present temporarily after start-up from the manufacturing process. Some occupants are more sensitive to this minor smoke and odor. It is recommended that doors and windows be open during the first heat cycle.

## INTRODUCTION

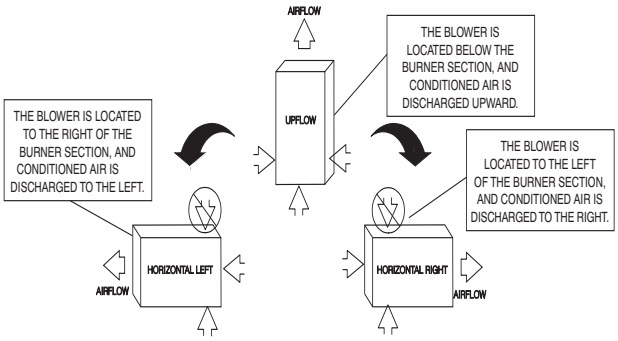


**NOTE**: Downflow not permitted.

A190213

**Fig. 2 - Upflow/Horizontal Orientations**

This Upflow/Horizontal Category IV condensing furnace is CSA design-certified as a direct-vent (2-pipe) furnace or non-direct vent (1-pipe) furnace. (Fig. 2). All models using indoor air for combustion or from a well-ventilated attic or crawl space, where permitted by local code.

The furnace is factory-shipped for use with natural gas only and cannot be converted to propane gas.

These furnaces are not approved for installation in recreational vehicles outdoors, or in manufactured/mobile homes. When installed on a wood floor, the furnace must be installed on a factory-supplied accessory combustible floor base or evaporator coil casing.

This furnace is designed for minimum continuous return-air temperature of 60°F (15°C) db or intermittent operation down to 55°F (13°C) db such as when used with a night setback thermostat. Return-air temperature must not exceed 80°F (27°C) db. Failure to follow these return-air temperature limits may affect reliability of heat exchangers, motors, and controls (Fig. 3).

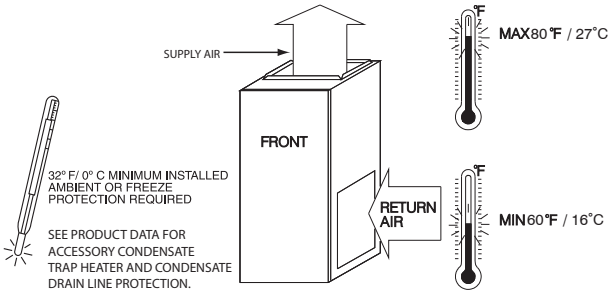


A150573

**Fig. 3 - Freeze Protection and Return Air Temperature**

The furnace should be sized to provide 100 percent of the design heating load requirement plus any margin that occurs because of furnace model size capacity increments. None of the furnace model sizes can be used if the heating load is less than half of the furnace model's output capacity. Use Air Conditioning Contractors of America (Manual J and S); American Society of Heating, Refrigerating, and Air-Conditioning Engineers; or other approved engineering method to calculate heating load estimates and select the furnace. Excessive oversizing of the furnace may cause the furnace and/or vent to fail prematurely, customer discomfort and/or vent freezing.

Failure to follow these guidelines is considered faulty installation and/or misapplication of the furnace; and resulting failure, damage, or repairs may impact warranty coverage.

For accessory installation details, refer to the applicable instruction literature.

**NOTE**: Remove all shipping materials, loose parts bags, and literature before operating the furnace. The loose parts bag contains more parts than needed (Table 2). The Ultra Low NOx condensing furnaces also contain an additional parts bag for the condensate trap, see Condensate Trap section.

**Table 2 – Loose Parts Bag**

| DESCRIPTION | QTY | NOT NEEDED |
|---|---|---|
| Air Intake Pipe Flange | 1 | |
| Vent Pipe Flange | 1 | |
| Pipe Flange Gaskets | 2 | |
| Sharp Tip Screws (Vent and Inlet Flanges) | 10 | |
| Vent Pipe Coupling | 1 | |
| Vent Pipe Coupling Clamps | 2 | |
| Gas Line Grommet | 1 | |
| Junction Box Cover | 1 | |
| Junction Box Base | 1 | |
| Green Ground Screw | 1 | |
| Blunt Tip Screws (Junction Box) | 3 | |
| Thermostat Wire Grommet | 1 | |
| Pressure Switch Tube | 1 | X |
| Rubber Drain Elbow | 1 | spare |
| Drain Tube Clamps | 4 | X |
| 1/2–in. CPVC to 3/4–in. PVC Pipe Adapter | 1 | X |

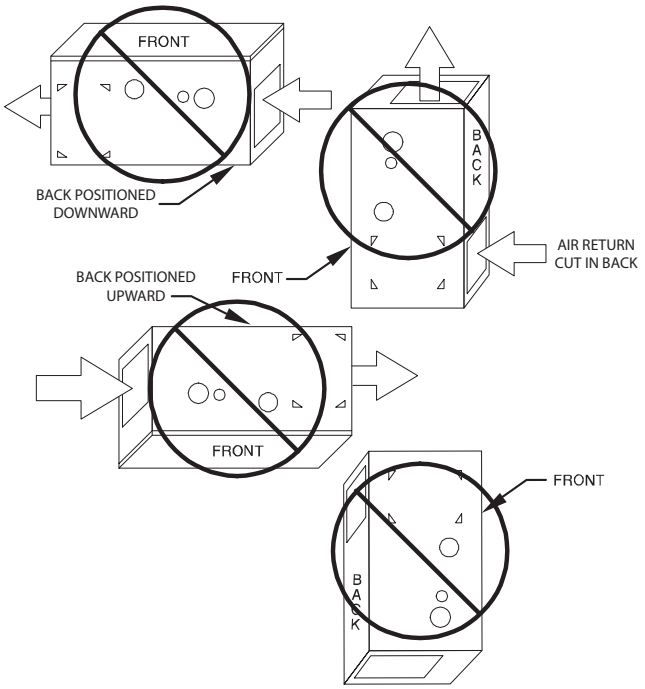


Downflow not permitted with any return air configuration.

A190256

**Fig. 4 - Prohibited Installations**

## ⚠ WARNING

**FIRE HAZARD**

Failure to follow this warning could result in personal injury, death and/or property damage.

Do not install the furnace on its back or hang furnace with control compartment facing downward. Safety control operation will be adversely affected. Never connect return-air ducts to the back of the furnace (Fig. 4).

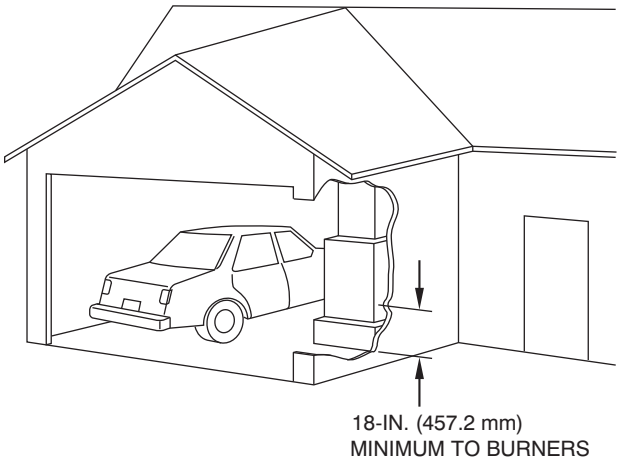


A93044

**Fig. 5 - Installation in a Garage**

# CODES AND STANDARDS

**Follow all national and local codes and standards in addition to these instructions.** The installation must comply with regulations of the serving gas supplier, local building, heating, plumbing, and other codes. In absence of local codes, the installation must comply with the national codes listed below and all authorities having jurisdiction.

In the United States, follow all codes and standards for the following:

## Safety

- Current edition of US: National Fuel Gas Code (NFGC) NFPA 54/ANSI Z223.1 and the Installation Standards, Warm Air Heating and Air Conditioning Systems ANSI/NFPA 90B

## General Installation

- US: NFGC and the NFPA 90B. For copies, contact the National Fire Protection Association Inc., Batterymarch Park, Quincy, MA 02269; or for only the NFGC contact the American Gas Association, 400 N. Capitol, N.W., Washington DC 20001

## Combustion and Ventilation Air

- US: Current edition of Section 9.3 of the NFPA54/ANSI Z223.1 Air for Combustion and Ventilation

## Duct Systems

- US: Current edition of Air Conditioning Contractors Association (ACCA) Manual D, Sheet Metal and Air Conditioning Contractors National Association (SMACNA), or American Society of Heating, Refrigeration, and Air Conditioning Engineers (ASHRAE) Fundamentals Handbook Chapter 35

## Acoustical Lining and Fibrous Glass Duct

- US: Current edition of SMACNA, NFPA 90B as tested by UL Standard 181 for Class I Rigid Air Ducts

## Gas Piping and Gas Pipe Pressure Testing

- US: Current edition of NFPA 54/ANSI Z223.1 NFGC; Chapters 5, 6, 7, and 8 and national plumbing codes.

In the state of Massachusetts:

- This product must be installed by a licensed plumber or gas fitter.
- When flexible connectors are used, the maximum length shall not exceed 36 in. (914 mm).
- When lever type gas shutoffs are used they shall be T-handle type.
- The use of copper tubing for gas piping is not approved by the state of Massachusetts.

## Electrical Connections

- US: Current edition of National Electrical Code (NEC) NFPA 70

## Condensate Drain Connection

- US: Current edition of National Standard Plumbing Code, Section 8.7.

## ELECTROSTATIC DISCHARGE (ESD) PRECAUTIONS PROCEDURE

**⚠ CAUTION**

**FURNACE RELIABILITY HAZARD**

Failure to follow this caution may result in unit component damage.

Electrostatic discharge can affect electronic components. Take precautions during furnace installation and servicing to protect the furnace electronic control. Precautions will prevent electrostatic discharges from personnel and hand tools which are held during the procedure. These precautions will help to avoid exposing the control to electrostatic discharge by putting the furnace, the control, and the person at the same electrostatic potential.

1. Disconnect all power to the furnace. Multiple disconnects may be required. **DO NOT TOUCH THE CONTROL OR ANY WIRE CONNECTED TO THE CONTROL PRIOR TO DISCHARGING YOUR BODY'S ELECTROSTATIC CHARGE TO GROUND.**
2. Firmly touch the clean, unpainted, metal surface of the furnace chassis which is close to the control. Tools held in a person's hand during grounding will be satisfactorily discharged.
3. After touching the chassis, you may proceed to service the control or connecting wires as long as you do nothing to recharge your body with static electricity (for example; **DO NOT** move or shuffle your feet, do not touch ungrounded objects, etc.).
4. If you touch ungrounded objects (and recharge your body with static electricity), firmly touch a clean, unpainted metal surface of the furnace again before touching control or wires.
5. Use this procedure for installed and uninstalled (ungrounded) furnaces.
6. Before removing a new control from its container, discharge your body's electrostatic charge to ground to protect the control from damage. If the control is to be installed in a furnace, follow items 1 through 4 before bringing the control or yourself in contact with the furnace. Put all used and new controls into containers before touching ungrounded objects.
7. An ESD service kit (available from commercial sources) may also be used to prevent ESD damage.

## ACCESSORIES

See Product Data Sheet for a list of accessories for this product.

## LOCATION

**⚠ CAUTION**

**PERSONAL RELIABILITY HAZARD**

Failure to follow this caution may result in unit component damage.

Furnace may not be used for heating buildings under construction.

**IMPORTANT**: Clearances for Condensate Trap
Before locating furnace, refer to condensate trap installation instructions section for required clearances for trap installation.

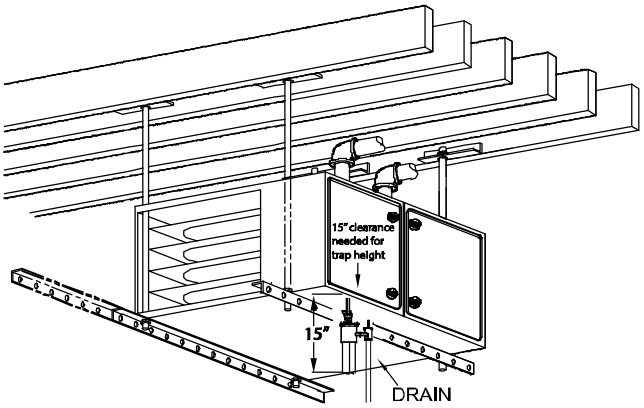


Representative drawing only, some models may vary.

A190356

**Fig. 6 - 15" Trap Clearance in Horizontal Application**

**NOTE: Local codes may require a drain pan and condensate tray when a condensing furnace is installed over a finished ceiling.**

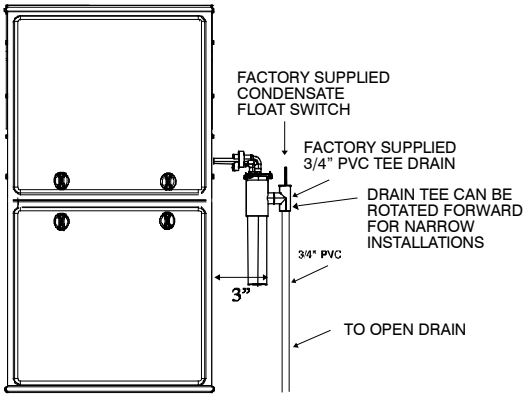


Representative drawing only, some models may vary.

A190317

**Fig. 7 - Trap Clearance in Upflow Application**

## General

These furnaces are shipped with materials to assist in proper furnace installation. These materials are shipped in the main blower compartment.

Loose parts bag contents (Table 2).

This furnace must:

- be installed so the electrical components are protected from water.
- not be installed directly on any combustible material other than wood flooring (refer to **SAFETY CONSIDERATIONS**).
- be located close to the chimney or vent and attached to an air distribution system. Refer to Air Ducts section.
- be provided ample space for servicing and cleaning. Always comply with minimum fire protection clearances (Table 1).

## ⚠ WARNING

**CARBON MONOXIDE POISONING / COMPONENT DAMAGE HAZARD**

Failure to follow this warning could result in personal injury or death and unit component damage.

Corrosive or contaminated air may cause failure of parts containing flue gas, which could leak into the living space. Air for combustion must not be contaminated by halogen compounds, which include fluoride, chloride, bromide, and iodide. These elements can corrode heat exchangers and shorten furnace life. Air contaminants are found in aerosol sprays, detergents, bleaches, cleaning solvents, salts, air fresheners, and other household products. Do not install furnace in a corrosive or contaminated atmosphere. Make sure all combustion and circulating air requirements are met, in addition to all local codes and ordinances.

The following types of furnace installations may require **OUTDOOR AIR** for combustion due to chemical exposures:

- Commercial buildings
- Buildings with indoor pools
- Laundry rooms
- Hobby or craft rooms
- Chemical storage areas

If air is exposed to the following substances, it should not be used for combustion air, and outdoor air may be required for combustion:

- Permanent wave solutions
- Chlorinated waxes and cleaners
- Chlorine based swimming pool chemicals
- Water softening chemicals
- De-icing salts or chemicals
- Carbon tetrachloride
- Halogen type refrigerants
- Cleaning solvents (such as perchloroethylene)
- Printing inks, paint removers, varnishes, etc.
- Hydrochloric acid
- Cements and glues
- Antistatic fabric softeners for clothes dryers
- Masonry acid washing materials

All fuel-burning equipment must be supplied with air for fuel combustion. Sufficient air must be provided to avoid negative pressure in the equipment room or space. A positive seal must be made between the furnace cabinet and the return-air duct to prevent pulling air from the burner area.

## ⚠ WARNING

**FIRE, INJURY OR DEATH HAZARD**

Failure to follow this warning could result in personal injury, death and/or property damage.

When the furnace is installed in a residential garage, the burners and burner ignition devices must be located at least 18 in. (457 mm) above the floor. The furnace must be located or protected to avoid damage by vehicles. When the furnace is installed in a public garage, airplane hangar, or other building having a hazardous atmosphere, the furnace must be installed in accordance with the current edition of NFPA 54/ANSI Z223.1 or CAN/CSA B149.2 (Fig. 5).

### Location Relative to Cooling Equipment

The cooling coil must be installed parallel with, or on the downstream side of the unit to avoid condensation in the heat exchangers. When installed parallel with the furnace, dampers or other flow control must prevent chilled air from entering the furnace. If the dampers are manually operated, they must be equipped with means to prevent operation of either unit unless the damper is in the full-heat or full-cool position. Refer to Installation of Evaporator Coil section for install requirements for unshielded coils (Table 6).

## AIR FOR COMBUSTION AND VENTILATION

### Introduction

#### 2-pipe Applications

When the furnace is installed as a 2-pipe furnace, no special provisions for air for combustion are required. However, other gas appliances installed in the space with the furnace may require outside air for combustion. Follow the guidelines below to ensure that other gas appliances have sufficient air for combustion.

#### 1-pipe Applications

When the furnace is installed as a 1-pipe furnace, it will be necessary to ensure there is adequate air for combustion. Other gas appliances installed with the furnace may also require air for combustion and ventilation in addition to the amount of combustion air and ventilation air required for the furnace. Follow the guidelines below to ensure that the furnace and other gas appliances have sufficient air for combustion.

#### Ventilated Combustion Air Applications

When the furnace is installed using the ventilated combustion air option, the attic or crawlspace must freely communicate with the outdoor to provide sufficient air for combustion. The combustion air pipe cannot be terminated in attics or crawlspaces that use ventilation fans designed to operate during the heating season. If ventilation fans are present in these areas, the combustion air pipe must terminate outdoors as a 2-Pipe system.

All air for combustion is piped directly to the furnace from a space that is well ventilated with outdoor air (such as an attic, crawl space or equipment closet) and the space is well isolated from the living space or garage. In addition, other gas appliances installed in the space with the furnace may require outside air for combustion. Follow the guidelines below to ensure that the roof or crawlspace walls have sufficient free area to provide sufficient air for combustion and ventilation for the furnaces. The guidelines below can be used to ensure that other gas appliances have sufficient air for combustion.

Provisions for adequate combustion, ventilation, and dilution air must be provided in accordance with:

- U.S.A. Installations: Current edition of Section 9.3 of the NFPA 54/ANSI Z223.1 , Air for Combustion and Ventilation and applicable provisions of the local building codes.

## ⚠ CAUTION

**FURNACE CORROSION HAZARD**

Failure to follow this caution may result in furnace damage.

Air for combustion must not be contaminated by halogen compounds, which include fluoride, chloride, bromide, and iodide. These elements can corrode heat exchangers and shorten furnace life. Air contaminants are found in aerosol sprays, detergents, bleaches, cleaning solvents, salts, air fresheners, and other household products.

## ⚠ WARNING

**CARBON MONOXIDE POISONING HAZARD**

Failure to follow this warning could result in personal injury or death.

The operation of exhaust fans, kitchen ventilation fans, clothes dryers, attic exhaust fans or fireplaces could create a NEGATIVE PRESSURE CONDITION at the furnace. Make-up air MUST be provided for the ventilation devices, in addition to that required by the furnace. Refer to the Carbon Monoxide Poisoning Hazard warning in the venting section of these instructions to determine if an adequate amount of make-up air is available.

The requirements for combustion and ventilation air depend upon whether or not the furnace is located in a space having a volume of at least 50 cubic feet per 1,000 Btuh input rating for all gas appliances installed in the space.

- Spaces having less than 50 cubic feet per 1,000 Btuh (4.8 cubic meters per kW) require the **Outdoor Combustion Air Method**.
- Spaces having at least 50 cubic feet per 1,000 Btuh (4.8 cubic meters per kW) may use the **Indoor Combustion Air, Standard or Known Air Infiltration Method.**

### Outdoor Combustion Air Method

1. Provide the space with sufficient air for proper combustion, ventilation, and dilution of flue gases using permanent horizontal or vertical duct(s) or opening(s) directly communicating with the outdoors or spaces that freely communicate with the outdoors.
2. Provide **TWO OUTDOOR OPENINGS**, one inlet and one outlet combustion and ventilation air opening, to the outdoors (Fig. 8).
   a. One opening **MUST** commence within 12 in. (300 mm) of the ceiling and the second opening MUST commence within 12 in. (300 mm) of the floor.
   b. Size openings and ducts (Fig. 8 and Table 3).
   c. **TWO HORIZONTAL DUCTS** require 1 sq. in. (645 sq. mm) of free area per 2,000 Btuh (1,100 $mm^2$/kW) of combined input for all gas appliances in the space (Fig. 8 and Table 3).
   d. **TWO OPENINGS OR VERTICAL DUCTS** require 1 sq. in. (645 sq. mm) of free area per 4,000 Btuh (550 $mm^2$/kW) for combined input of all gas appliances in the space (Fig. 8 and Table 3).
3. **ONE OUTDOOR OPENING** requires:
   a. 1 sq. in. (645 sq. mm) of free area per 3,000 Btuh (734 $mm^2$/kW) for combined input of all gas appliances in the space (Fig. 8 and Table 3).
   b. Not less than the sum of the areas of all vent connectors in the space.

The opening shall commence within 12 in. (300 mm) of the ceiling. Appliances in the space shall have clearances of at least 1 in. (25 mm) from the sides and back and 6 in. (150 mm) from the front. The opening shall directly communicate with the outdoors or shall communicate through a vertical or horizontal duct to the outdoors or spaces (crawl or attic) that freely communicate with the outdoors.

### Indoor Combustion Air© NFPA & AGA

### Standard and Known-Air-Infiltration Rate Methods

**Indoor air** is permitted for combustion, ventilation, and dilution, if the **Standard** or **Known-Air-Infiltration** Method is used.

## ⚠ WARNING

**CARBON MONOXIDE POISONING HAZARD**

Failure to follow this warning could result in personal injury or death.

Many homes require air to be supplied from outdoors for furnace combustion, ventilation, and dilution of flue gases.

The furnace combustion air supply must be provided in accordance with this instruction manual.

### Standard Method

1. The space has no less volume than 50 cubic feet per 1,000 Btuh of the maximum input ratings for all gas appliances installed in the space and
2. The air infiltration rate is not known to be less than 0.40 air changes per hour (ACH).

The **Known Air Infiltration Rate** Method shall be used, if the infiltration rate is known to be:

1. Less than 0.40 ACH and
2. Equal to or greater than 0.10 ACH

Infiltration rates greater than 0.60 ACH shall not be used. The minimum required volume of the space varies with the number of ACH and shall be determined (Table 4) or Equations 1 and 2. Determine the minimum required volume for each appliance in the space and add the volumes together to get the total minimum required volume for the space.

Table 4 - Minimum Space Volumes were determined by using the following equations from the current edition of the *National Fuel Gas Code ANSI Z223.1/NFPA 54, 9.3.2.2:*

1. For other than fan-assisted appliances, such as a draft hood-equipped water heater:

$$\text{Volume}_{\text{Other}} = \frac{21\text{ft}^3}{\text{ACH}}\left(\frac{I_{\text{other}}}{1000\ \text{Btu/hr}}\right)$$

A04002

2. For fan-assisted appliances such as this furnace:

$$\text{Volume}_{\text{Fan}} = \frac{15\text{ft}^3}{\text{ACH}}\left(\frac{I_{\text{fan}}}{1000\ \text{Btu/hr}}\right)$$

A04003

If: Iother = combined input of all other than fan-assisted appliances in Btuh/hr

Ifan = combined input of all fan-assisted appliances in Btuh/hr

ACH = air changes per hour (ACH shall not exceed 0.60.)

The following requirements apply to the **Standard** Method and to the **Known Air Infiltration Rate** Method.

1. Adjoining rooms can be considered part of a space if:
   a. There are no closeable doors between rooms.
   b. Combining spaces on same floor level. Each opening shall have free area of at least 1 $in.^2$/1,000 Btuh (2,000 $mm^2$/kW) of the total input rating of all gas appliances in the space, but not less than 100 $in.^2$ (0.06 $m^2$). One opening shall commence within 12 in. (300 mm) of the ceiling and the second opening shall commence within 12 in. (300 mm) of the floor. The minimum dimension of air openings shall be at least 3 in. (80 mm). (Fig. 9)
   c. Combining space on different floor levels. The volumes of spaces on different floor levels shall be considered as com-

municating spaces if connected by one or more permanent openings in doors or floors having free area of at least 2 in.$^2$/1,000 Btuh (4,400 mm$^2$/kW) of total input rating of all gas appliances.

2. An attic or crawlspace may be considered a space that freely communicates with the outdoors provided there are adequate permanent ventilation openings directly to outdoors having free area of at least 1-in.$^2$/4,000 Btuh of total input rating for all gas appliances in the space.
3. In spaces that use the **Indoor Combustion Air** Method, infiltration should be adequate to provide air for combustion, permanent ventilation and dilution of flue gases. However, in buildings with unusually tight construction, additional air MUST be provided using the methods described in the **Outdoor Combustion Air** Method section.
4. Unusually tight construction is defined as Construction with:
   a. Walls and ceilings exposed to the outdoors have a continuous, sealed vapor barrier. Openings are gasketed or sealed and
   b. Doors and openable windows are weatherstripped and
   c. Other openings are caulked or sealed. These include joints around window and door frames, between sole plates and floors, between wall-ceiling joints, between wall panels, at penetrations for plumbing, electrical and gas lines, etc.

## Combination of Indoor and Outdoor Air

1. Indoor openings shall comply with the **Indoor Combustion Air** Method below and,
2. Outdoor openings shall be located as required in the **Outdoor Combustion Air** Method mentioned previously and,
3. Outdoor openings shall be sized as follows:
   a. Calculate the Ratio of all Indoor Space volume divided by required volume for **Indoor Combustion Air** Method below.
   b. Outdoor opening size reduction **Factor** is 1 minus the **Ratio** in a. above.
   c. Minimum size of Outdoor openings shall be the size required in **Outdoor Combustion Air** Method above multiplied by reduction **Factor** in b. above. The minimum dimension of air openings shall be not less than 3 in. (80 mm).

**Table 3 – Minimum Free Area Required for Each Combustion Air Opening or Duct to Outdoors**

| FURNACE INPUT (BTUH) | TWO HORIZONTAL DUCTS (1 SQ. IN./2,000 BTUH) (1,100 SQ. MM/KW) | | SINGLE DUCT OR OPENING (1 SQ. IN./3,000 BTUH) (734 SQ. MM/KW) | | TWO OPENINGS OR VERTICAL DUCTS (1 SQ. IN./4,000 BTUH) (550 SQ. MM/KW) | |
|---|---|---|---|---|---|---|
| | Free Area of Opening and Duct Sq. In (Sq. mm) | Round Duct In. (mm) Dia | Free Area of Opening and Duct Sq. In (Sq. mm) | Round Duct In. (mm) Dia | Free Area of Opening and Duct Sq. In (mm) | Round Duct In. (mm) Dia. |
| **60,000** | 30 (19355) | 6 (152) | 20 (13043) | 5 (127) | 15 (9678) | 5 (127) |
| **80,000** | 40 (25807) | 7 (178) | 27 (17391) | 6 (152) | 20 (12904) | 5 (127) |
| **100,000** | 50 (32258) | 8 (203) | 34 (21739) | 7 (178) | 25 (16130) | 6 (152) |

**EXAMPLES: Determining Free Area**

| FURNACE | | WATER HEATER | | TOTAL INPUT | | |
|---|---|---|---|---|---|---|
| 60,000 | + | 40,000 | = | (100,000 divided by 3,000) | = | 33.3 Sq. In. for each Single Duct or Opening |
| 80,000 | + | 30,000 | = | (110,000 divided by 2,000) | = | 55.0 Sq. In. for each two Horizontal Ducts |
| 100,000 | + | 30,000 | = | (130,000 divided by 4,000) | = | 32.5 Sq. In. for each two Vertical Ducts or Openings |

**Table 4 – Minimum Space Volumes for 100% Combustion, Ventilation and Dilution Air from Outdoors**

| AIR CHANGES PER HOUR (ACH) | OTHER THAN FAN-ASSISTED TOTAL (1,000'S BTUH GAS INPUT RATE) | | | FAN-ASSISTED TOTAL (1,000'S BTUH GAS INPUT RATE) | | | | | | |
|---|---|---|---|---|---|---|---|---|---|---|
| | 30 | 40 | 50 | 26 | 40 | 60 | 80 | 100 | 120 | 140 |
| | Space Volume Ft$^3$ (M$^3$) | | | | | | | | | |
| **0.60** | 1,050 (29.7) | 1,400 (39.6) | 1,750 (49.5) | 910 (25.8) | 1,400 (39.6) | 1,500 (42.5) | 2,000 (56.6) | 2,500 (70.8) | 3,000 (84.9) | 3,500 (99.1) |
| **0.50** | 1,260 (35.6) | 1,680 (47.5) | 2,100 (59.4) | 1092 (30.9) | 1,680 (47.5) | 1,800 (51.0) | 2,400 (67.9) | 3,000 (84.9) | 3,600 (101.9) | 4,200 (118.9) |
| **0.40** | 1,575 (44.5) | 2,100 (59.4) | 2,625 (74.3) | 1365 (38.7) | 2,100 (59.4) | 2,250 (63.7) | 3,000 (84.9) | 3,750 (106.1) | 4,500 (127.3) | 5,250 (148.6) |
| **0.30** | 2,100 (59.4) | 2,800 (79.2) | 3,500 (99.1) | 1820 (51.5) | 2,800 (79.2) | 3,000 (84.9) | 4,000 (113.2) | 5,000 (141.5) | 6,000 (169.8) | 7,000 (198.1) |
| **0.20** | 3,150 (89.1) | 4,200 (118.9) | 5,250 (148.6) | 2730 (77.3) | 4,200 (118.9) | 4,500 (127.3) | 6,000 (169.8) | 7,500 (212.2) | 9,000 (254.6) | 10,500 (297.1) |
| **0.10** | 6,300 (178.0) | 8,400 (237.8) | 10,500 (297.3) | 5460 (154.6) | 8,400 (237.8) | 9,000 (254.6) | 12,000 (339.5) | 15,000 (424.4) | 18,000 (509.2) | 21,000 (594.1) |
| **0.00** | NP | NP | NP | NP | NP | NP | NP | NP | NP | NP |

NP = Not Permitted

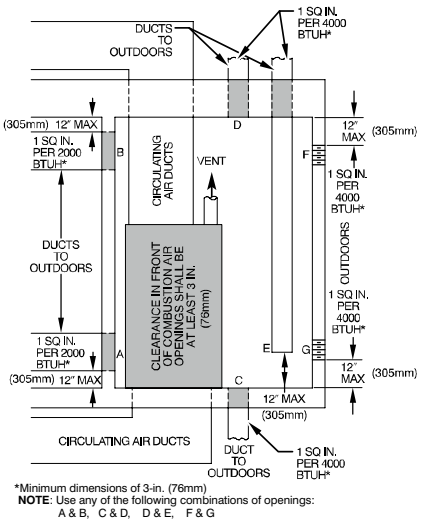


L12F012

**Fig. 8 - Air for Combustion, Ventilation, and Dilution for Outdoors**

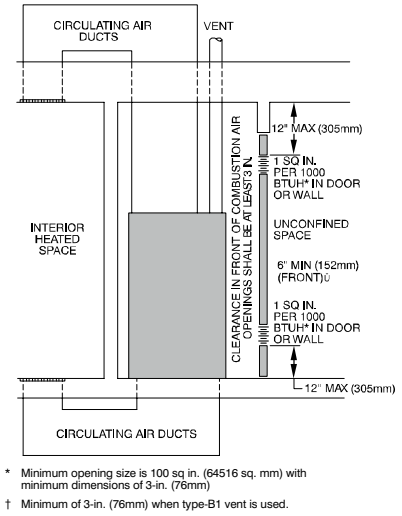


L12F013

**Fig. 9 - Air for Combustion, Ventilation, and Dilution from Indoors**

## CONDENSATE TRAP

### Condensate Trap

The condensate trap is a field installed trap. A bag of loose parts needed to construct the trap is provided with the furnace. The assembled components of the trap (Fig. 16 and Fig. 17) are shown with assembly instructions in the Installation section of this manual. A float switch is included and must be installed in the trap assembly and connected to the factory-provided wire harness connections before furnace will operate.

**⚠ WARNING**

**CARBON MONOXIDE POISONING AND PROPERTY DAMAGE HAZARD**

Failure to follow this warning could result in property damage, personal injury or death.

The condensate trap provided with furnace must be installed per the furnace installation instructions. Do not modify the trap beyond what is permitted or substitute a different trap.

**NOTICE**

The condensate trap extends below the underside of the casing in the horizontal position. A minimum of 15-in. of clearance is required between the casing side and the furnace platform for the trap to extend out of the casing in the horizontal position. Allow at least 1/4-in. per foot of slope down.

## CONDENSATE DRAIN CONNECTION

**⚠ CAUTION**

**FROZEN AND BURST WATER PIPE HAZARD**

Failure to protect against the risk of freezing may result in property damage.

Special precautions MUST be made if installing furnace in an area which may drop below freezing. This can cause improper operation or damage to equipment. If furnace environment has the potential of freezing, the drain trap and drain line must be protected. The use of accessory electric heat tape and/or RV antifreeze is required for these installations.

**⚠ CAUTION**

**PROPERTY DAMAGE HAZARD**

Failure to follow this caution may result in burst water pipes and/or property damage.

If a condensate pump is installed, a plugged condensate drain or a failed pump may cause the furnace to shut down. Do not leave the home unattended during freezing weather without turning off water supply and draining water pipes or otherwise protecting against the risk of frozen pipes.

DO NOT trap condensate water in the drain line in any other location than at the condensate drain trap supplied with the furnace. If possible, DO NOT route the drain line where it may freeze. The drain line must terminate at an inside drain to prevent freezing of the condensate and possible property damage.

Special precautions MUST be made if installing furnace in an area which may drop below 32° F (0° C). This can cause improper operation or damage to the equipment. If the furnace environment has the potential of freezing, the drain trap and drain line must be protected. In areas where the temperature may be below 32° F (0° C), a Condensate Freeze Protection heat tape kit is required. Refer to the Accessory section of the Product Data for current kit number. A self-regulating, shielded and waterproof heat tape rated at 3 to 6 watt per foot (10 to 20 watt per meter) at 115 volt, 40°F (4°C) may be used to provide freeze protection of the remaining condensate drain line. Wrap the drain trap and drain line with the heat tape and secure with appropriate plastic ties. Follow the heat tape manufacturer's recommendations. Prime the trap before furnace operation.

The condensate drain line must be supported and/or secured per local codes. Supports and clamps should be spaced to prevent the drain line from sagging or being dislocated from the furnace or termination point. In the absence of local codes, consult the current edition of the National Standard Plumbing Code, in the U.S.

An indoor coil condensate drain or humidifier drain can be connected to the external furnace condensate drain provided:

a. All condensate piping is at least 3/4-in. PVC and there is a relief tee at the top of condensate drain piping (Fig. 11).
b. Connect the coil condensate drain downstream of the furnace condensate trap.

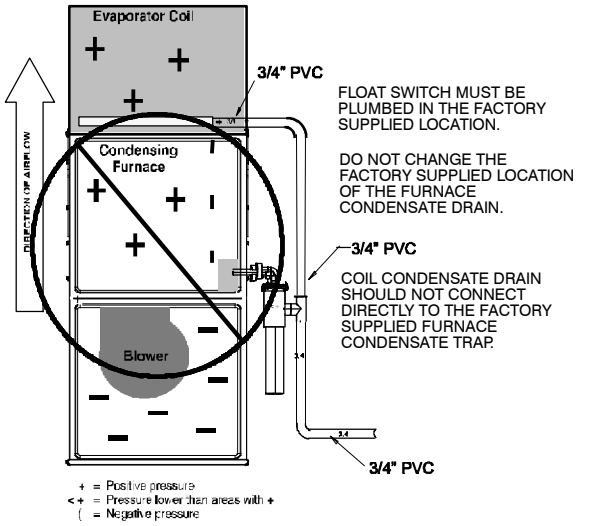


A190319

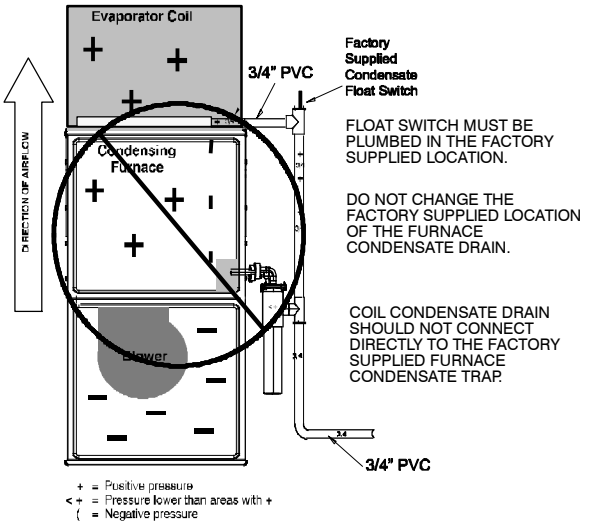


A190320

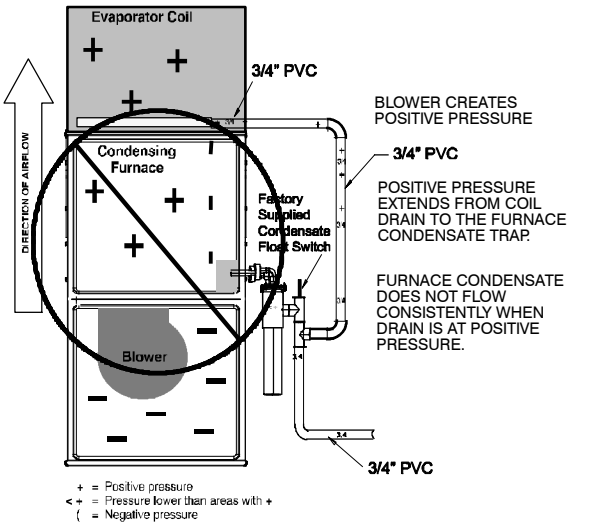


A190321

**Fig. 10 - Example of Field Drain Attachment (Not Allowed)**

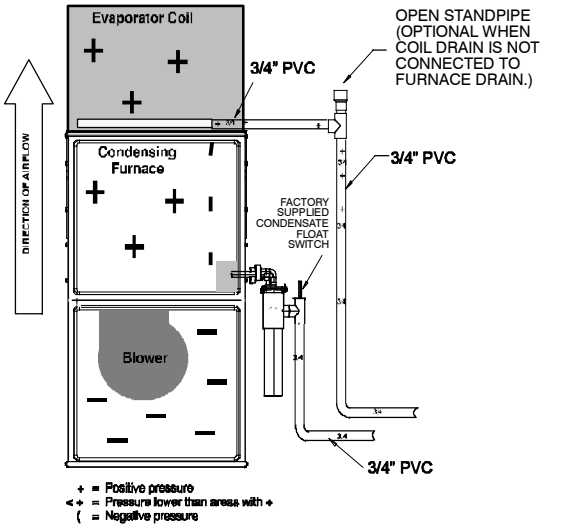


A190309

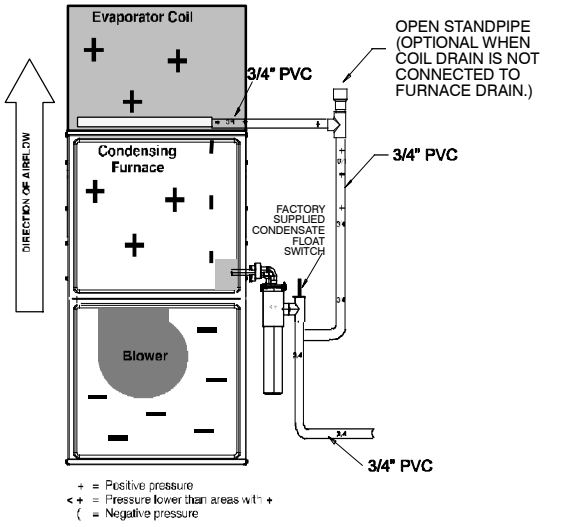


A190310

**NOTE**: Coil may require metal spacer or shield between furnace and coil. See coil install requirements (Table 6).

**NOTE**: If condensate and coil drains are joined, must be joined downstream of the furnace condensate trap float switch tee.

**NOTE**: Condensate float switch is for furnace draining only and will not act as float switch for coil drain pan.

**Fig. 11 - Example of Field Drain Attachment**

# NOTICE

Upflow installations utilizing the right side air return opening should follow the Upflow Specific Steps - Offset Installation to ensure the full opening is available for return ductwork.

## INSTALLATION

### Preparing the Furnace – Before Setting in Place

1. Remove appropriate knockout based off the installation orientation.
2. Peel off green gasket from the collector box to allow more room for hose clamps (Fig. 14).

**Table 5 – Condensate Trap Bag Contents**

| DESCRIPTION | QUANTITY | INSTALLATION CONFIGURATION | | |
|---|---|---|---|---|
| | | HORIZONTAL | UPFLOW | UPFLOW OFFSET |
| Trap Assembly | 1 | x | x | x |
| Switch with Float | 1 | x | x | x |
| Plastic Collar | 1 | x | x | x |
| Collar Gasket | 1 | x | x | x |
| Screws | 8 | 6 | 6 | 8 |
| Rubber Elbow | 2 | x | x | x |
| Clamp – Worm Drive | 4 | x | x | x |
| Tube A (.5– in. x 2.75– in.) | 1 | | x | x |
| Tube B (.5– in. x 2.25– in.) | 1 | | x | x |
| Tube C (.5– in. x 3.5– in.) | 1 | | | x |
| Tube D (.5– in. x 4.5– in.) | 1 | | | x |
| Tube E (.5– in. x 13.5– in.) | 2 | x | x | x |
| CPVC Elbow – 45° | 2 | | | x |
| CPVC Elbow – 90° | 2 | | x | x |
| Upflow Bracket | 1 | | x | x |
| Adapter Plate | 1 | | | x |
| Bolt | 1 | | x | x |
| Nut | 1 | | x | x |
| Pigtail Harness Assembly | 1 | x | x | x |
| Grommet | 1 | x | x | x |
| Wire Nuts | 2 | x | x | x |

* 3 pieces of Trap Assembly may need to be assembled per Fig. 19.

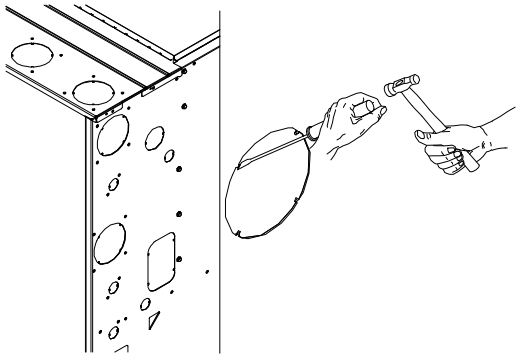

**⚠ CAUTION**

**CUT HAZARD**

Failure to follow this caution may result in personal injury. Sheet metal parts may have sharp edges or burrs. Use care and wear appropriate protective clothing, safety glasses and gloves when handling parts, and servicing furnaces.

L12F019B

**Fig. 12 - Knockout Removal**

**IMPORTANT**: Whenever sheet metal screws are used, it is recommended to pre-drill 1/8-in. holes.

3. Cut the two (2) Rubber Elbows (Fig. 13). Each elbow should only be cut once.

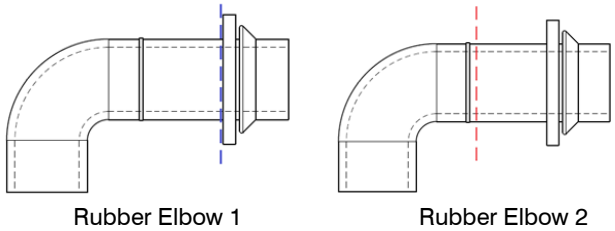


A190322

**Fig. 13 - Rubber Elbows**

4. Remove two of the factory-installed drain plugs from collector box. Orientation specific drain plugs (Fig. 14).

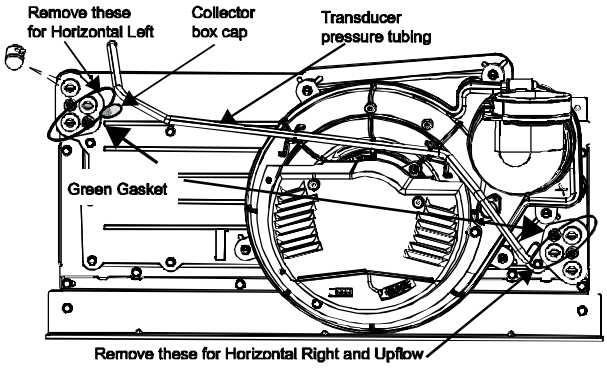


A190312

**Fig. 14 - Drain Plugs**

**⚠ CAUTION**

**PROPERTY DAMAGE HAZARD**

Failure to follow this caution may result in property damage.

Over tightening hose clamps may crack plastic components which may result in water leaks causing possible water damage.

5. Install and tighten two (2) of the Worm Drive Clamps and the two cut Rubber Elbows (Fig. 15). Torque the clamps to hand-tight (15 lb-in.). Over tightening hose clamps may crack plastic components which may result in water leaks and possibly water damage.
   **TIP**: It is helpful to use a ratcheting box wrench or a ratcheting socket wrench to tighten the clamps. The long end of Rubber Elbow 2 should be pointed towards the collector box.

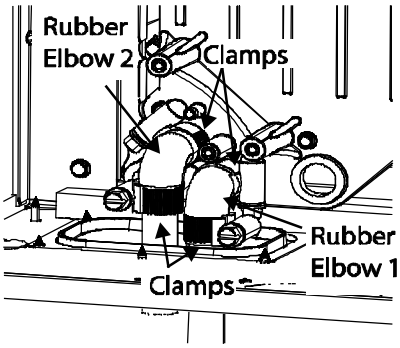


A190323

**Fig. 15 - Example of Hose Clamp Installation**

6. If trap comes unassembled, the components will require assembly (Fig. 19) with PVC glue. After assembly, firmly press the Float Switch into the Trap Assembly.

7. The provided 3/4-in. PVC tube may be replaced with up to 24-in. of 3/4-in. PVC tube to allow for float switch tee to extend past the furnace casing for easier service. **IMPORTANT**: using a longer PVC tube to extend the float switch is not allowed when the trap itself is installed in the Remote Trap configuration.

## ⚠ WARNING

**CARBON MONOXIDE POISONING AND PROPERTY DAMAGE HAZARD**

Failure to follow this warning could result in property damage, personal injury or death.

PVC trap components must be properly glued using PVC glue. CPVC components must be properly glued using CPVC glue.

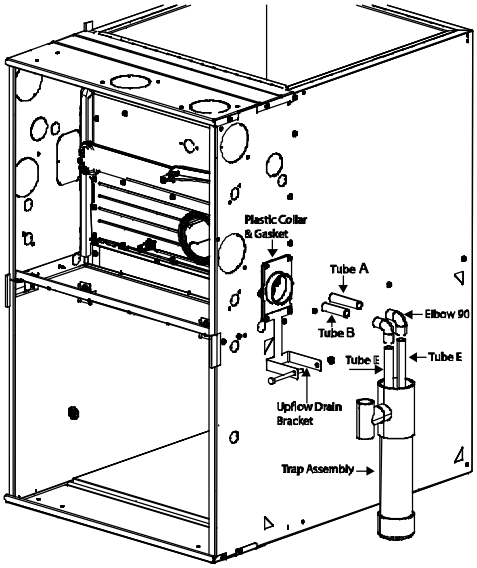


A190324

**Fig. 16 - Upflow Condensate Drain**

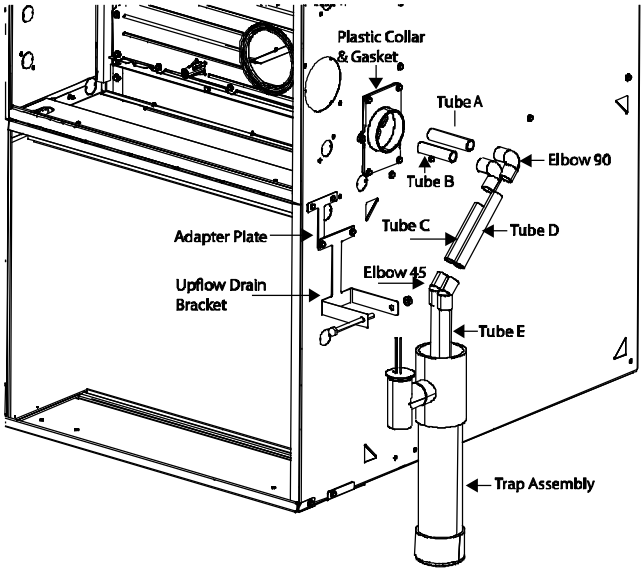


A190325

**Fig. 17 - Upflow - Offset of Condensate Drain**

## Upflow Specific Steps – Standard Installation

1. Install and tighten remaining two (2) clamps and short CPVC tubes (Fig. 15). The longer tube (Tube A) should be installed in the upper most rubber elbow. Torque the clamps to hand-tight (15 lb-in.). Over tightening hose clamps may crack plastic components which may result in water leaks and possibly water damage.
2. Remove adhesive backing from the Collar Gasket and apply it to the rear side of the Collar Plate.
3. Place Collar Plate on over condensate drain knockout while routing the short CPVC tubes through the Collar Plate.
4. Using four (4) of the sheet metal screws, screw the Plastic Collar to the furnace casing through the four (4) holes in the middle and top.
5. Install the Upflow Drain Bracket with two (2) sheet metal screws to the bottom of the Collar Plate.
6. Assemble the two (2) E Tubes and Elbows (90°) to Tubes A & B (Fig. 16). Ensure the two long tubes are pointed downward before glue is set.
7. Set the Trap Assembly on the arms of the bracket and tighten with the provided bolt and nut. Ensure the bottom of the large Tee is resting on the bracket (Fig. 18).

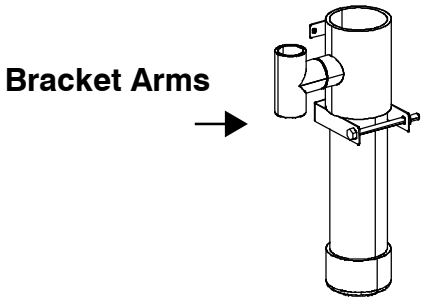


A190327

**Fig. 18 - Bracket Arms**

## ⚠ CAUTION

**FURNACE OPERATION HAZARD**

Failure to follow this caution may result in furnace damage.

Special precautions MUST be made when installing furnace. The condensate pipe with the float switch can not be obstructed or used to directly drain the coil drain pan. This can cause improper operation or damage to equipment. The float switch must NOT be obstructed.

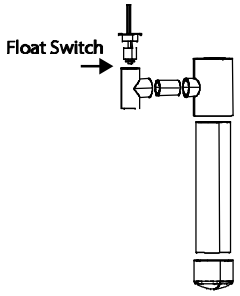


A190326

**Fig. 19 -** Assembly of Main Trap Components with Float Switch

**NOTE**: PVC pieces must be glued using PVC glue to prevent leaks.

## Upflow Specific Steps – Offset Installation

1. Install short CPVC tubes (Fig. 15 or Fig. 17). The longer tube (Tube A) should be installed in the upper most rubber elbow. Torque the clamps to hand-tight (15 lb-in.). Over tightening hose clamps may crack plastic components which may result in water leaks and possibly water damage.
2. Remove adhesive backing from the Collar Gasket and apply it to the rear side of the Collar Plate.
3. Place Collar Plate over condensate drain knockout while routing the short CPVC tubes through the Collar Plate.
4. Using six (6) of the sheet metal screws, screw the Plastic Collar to the furnace casing.
5. Remove two (2) blower shelf screws and install the Adapter Plate. Using two (2) of the sheet metal screws provided, attach the Upflow Bracket to the Adapter Plate (Fig. 17).
6. Assemble the Tubes (C, D, & E) and Elbows (45° & 90°) using PVC glue and connect to Tubes A & B (Fig. 17). Ensure the two long tubes are pointed downward before glue is set.
7. Set the Trap Assembly on the arms of the bracket and tighten with the provided bolt and nut. Ensure the bottom of the large Tee is resting on the bracket (Fig. 18).
8. Tighten remaining two (2) clamps connecting Tubes A & B to the Rubber Elbows (Fig. 15). Torque the clamps to hand-tight (15 lb-in.). Over tightening hose clamps may crack plastic components which may result in water leaks and possibly water damage.

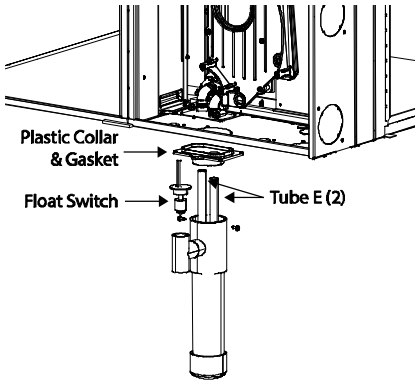


A190382

**Fig. 20 - Horizontal - Offset of Condensate Drain**

## Horizontal Specific Steps

1. Install and tighten remaining two (2) clamps and two (2) long CPVC tubes (Fig. 15 and Fig. 21). Torque the clamps to hand-tight (15 lb-in.). Over tightening hose clamps may crack plastic components which may result in water leaks and possibly water damage.
2. Remove adhesive backing from the Collar Gasket and apply it to the rear side of the Collar Plate.
3. Slide the Plastic Collar approximately halfway up the tubes and then slide the Trap Assembly over the long CPVC tubes. You may need to push the long CPVC tubes towards the back of the furnace during this step depending on the clearance below the furnace (Fig. 21).

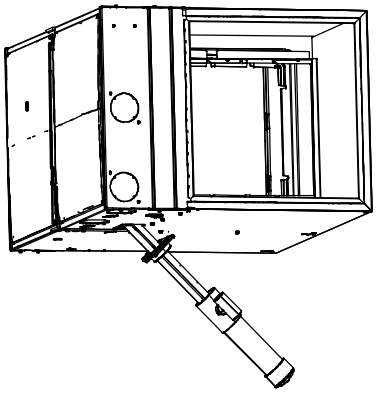

A190328

**Fig. 21 - Horizontal - Trap Assembly Aid**

4. Using six (6) of the sheet metal screws, screw the Plastic Collar to the furnace.
5. Insert the Trap Assembly onto the Plastic Collar (Fig. 22). Using two (2) sheet metal screws, fasten the condensate trap assembly to the Plastic Collar.

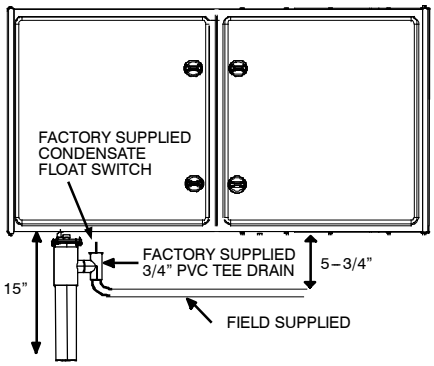


Representative drawing only, some models may vary.

A190315

**Fig. 22 - 15" Trap Clearance in Horizontal Application (Note: Drain line can be run horizontally or vertically)**

**NOTE: Field Supplied Drain can be routed horizontally from tee at top of the trap, allow at least 1/4-in. per foot of slope down.**

## NOTICE

Extra water in transducer pressure tubing may inhibit furnace operation because of incorrect pressure readings.

6. Remove collector box cap.
7. Remove transducer pressure tubing and trim transducer pressure tubing length ensuring no traps or loops for extra water collections. Install on the port where the collector box cap was removed from (Fig. 14).

It is permissible to run the trap up to 5 ft. away from the furnace to an area with the required trap clearance provided the following steps and conditions are followed.

## Alternate Horizontal Option - Remote Trap Installation Specific Steps

1. Glue included 90° CPVC elbows to shortest two CPVC Tubes (A and B) or replace with two field supplied 1/2-in. CPVC tubes of the desired length (5 ft. or less) to extend out of the cabinet.
2. Remove adhesive backing from the Collar Gasket and apply it to the rear side of the Collar Plate.
3. Place Collar Plate over condensate drain knockout and fasten to cabinet with six (6) of the sheet metal screws.
4. Install elbow and tube assemblies by routing tubes through collar plate and inserting the ends into the rubber elbows previously installed on the collector box. Ensure elbows are pointed toward desired trap location before tightening the clamps.
5. Torque the clamps to hand-tight (15 lb-in.). Over tightening hose clamps may crack plastic components which may result in water leaks and possibly water damage.
6. Attach the field supplied 1/2-in. CPVC tubing for the remote run to the 90° elbows that extend past the casing. Run the two drain lines up to 5 ft away from where they exit the furnace casing to reach the remote trap location. All condensate drain line joints must be glued with CPVC glue.
7. Use provided tubes (Tube E) to extend into the main body of the trap and CPVC elbows MUST touch the top of the PVC tube of the main trap.

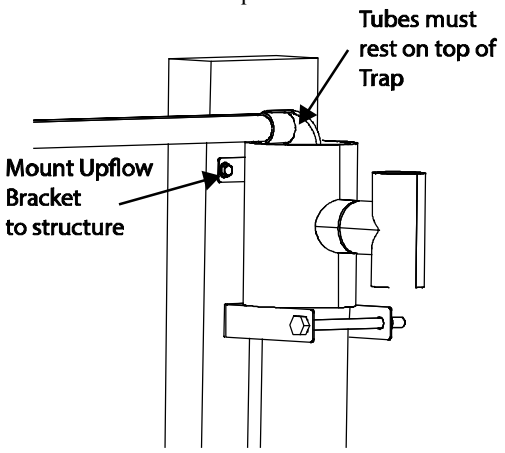


A190392

**Fig. 23 - Tubes on top of Trap**

8. Mount included Upflow Bracket to structure ensuring condensate drain is sloped 1/4-in. per foot and that the CPVC elbows rest on top of the PVC tube of the main trap (Fig. 24).
9. Set the Trap Assembly on the arms of the Upflow Bracket and tighten with the provided bolt and nut. Ensure the bottom of the large Tee is resting on the bracket (Fig. 18).

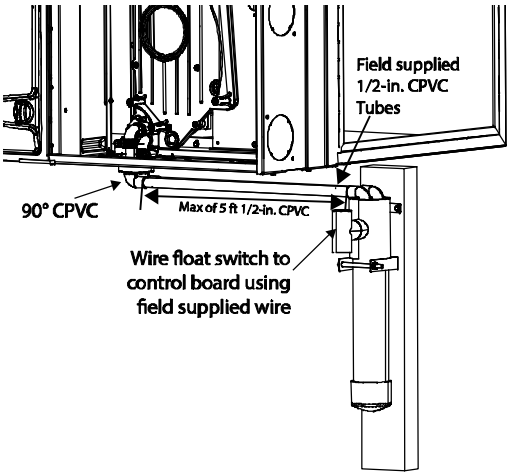


A190393

**Fig. 24 - Alternate Horizontal Option - Remote Trap**

## Finishing Installation

1. Route the float switch wires through a Plastic Grommet and then through a knockout to the blower compartment. Adjust Plastic Grommet so that it seals the cabinet.
2. Using wire nuts, make connection between Float Switch and Pigtail Harness Assembly. Lastly, join the 2 pin receptacle from the Pigtail with the 2 pin receptacle that originates from the control board 12-pin connector. Alternate Horizontal Option - Remote Trap may require additional field supplied wire to make connection between float switch and pigtail harness assembly connected to control board.
3. If the installation is a Direct Vent application, apply silicone or duct putty around the CPVC tubes passing through the clearance holes in the Plastic Collar to fully seal the combustion vestibule.
4. The remaining drain line can be constructed from field supplied 1/2-in. CPVC or 3/4-in. PVC pipe, in compliance with local building codes. A factory-supplied 1/2-in. CPVC to 3/4-in. PVC adapter is supplied in the loose parts bag for use as required.
5. Connect additional condensate piping to a code-approved drain, or to a condensate pump approved for use with acidic furnace condensate and compatible with mineral and vegetable oils, such as canola oil.
6. Allow at least 1/4-in. per foot (20 mm per meter) of slope down and away from the furnace in horizontal sections of drain line.

## Installation of Evaporator Coils

When installing the evaporator coil, refer to the allowed installation configurations (Table 6). Some coils require an 8-in. tall sheet metal spacer between the furnace and the coil or some require a metal shield between the drain pan of the coil and the discharge flanges of the furnace. This is to protect the composite drain pan of the evaporator coil. The coil offset adapter kits in the product accessory list will require an additional field fabricated adapter to ensure the 8-in. separation.

**⚠ WARNING**

**FIRE HAZARD**

When installing evaporator coils that have composite (plastic) drain pans and are exposed directly to the furnace heat exchanger, a sheet metal spacer/transition or drain pan shield is required.

Failure to protect the coil composite drain pan could result in fire, personal injury, or death. (Table 6)

**Table 6 – Evaporator Coil Spacer or Shield Requirements.**

| Type of Coil | Install Flush to Furnace | Install with 8–in. Spacer | Install with Metal Shield |
|---|---|---|---|
| Furnace Manufacturer's N Coil | Allowed | Not Required | Not Required |
| Furnace Manufacturer's A Coil | Not Allowed | Allowed (Except 100k BTU size in Horizontal Right – **MUST** use shield) | Allowed (See Note 2) |
| 3rd Party Coil – Factory Shielded (See Note 1) | Allowed | Not Required | Not Required |
| 3rd Party Coil – Unshielded | Not Allowed | Allowed (Except 100k BTU size in Horizontal Right – **MUST** use shield) | Allowed (See Note 3) |

**NOTE**:

1. 3rd Party Coils that are factory-supplied with a metallic shield over the plastic composite drain pan must completely shield all plastic composite materials from direct exposure to any part of the heat exchanger. Consult with 3rd Party Manufacturer to ensure coil is properly shielded. Coils that are only partially shielded should be treated as un-shielded and require a spacer.
2. Field-fabricated metallic shield must completely shield all plastic composite materials from direct exposure to any part of the heat exchanger. Coils that are only partially shielded should be treated as un-shielded and require a spacer. Dimensional requirements (Fig. 26).
3. For 3rd party unshielded coils, consult manufacturer for design of a field-fabricated shield that completely shields all plastic composite materials from direct exposure to any part of the heat exchanger.

All adapters are field fabricated according to the dimensions for the metal shield (Fig. 25) and for the 8-in. tall sheet metal spacer (Fig. 26).

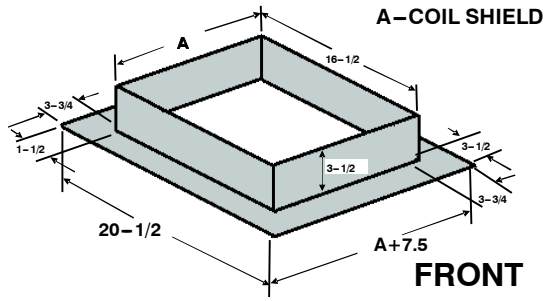


A190295

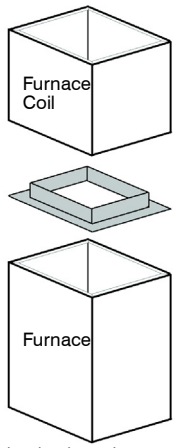


Representative drawing only, some models may vary.

A190296

| Cabinet Size | Dimension "A" |
|---|---|
| 17–in. | 10–in. |
| 21–in. | 13.5–in. |

**Fig. 25 - Dimensions Metal Shield**

**NOTE**: The metal shield in the figure above is only recommended for use with furnace manufacturer's A-Coil and may not be compatible with 3rd party coils. In the event the shield shown above is incompatible with the desired coil, use a spacer or consult 3rd Party Manufacturer for recommended dimensions and design of suitable shield.

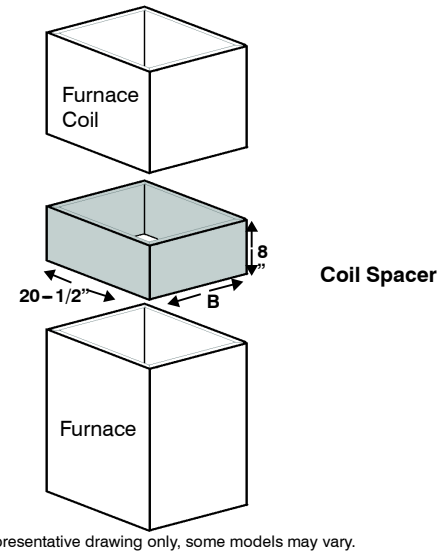


Representative drawing only, some models may vary.

A190301

| Cabinet Size | Dimension "B" |
|---|---|
| 17–in. | 17–1/2–in. |
| 21–in. | 21–in. |

**Fig. 26 - Dimensions of 8-in. Tall Metal Spacer**

**NOTE**: The allowable use of the 8-in. spacer demonstration (Table 6 and Fig. 26). The spacer may taper to accommodate different coil/furnace width combinations but must always keep an 8-in. minimum height if used. Space between the top of the furnace casing and the bottom of the coil.

**NOTE**: When the indoor coil is placed in an unconditioned space, insulation should be applied and wrapped around the outside of coil casing, 8-in. adapter and supply duct contact point.

1. Create field fabricated adapter (if needed, Table 6).
2. If adapter is needed, place field fabricated adapter on furnace. Adapter should be tapered to fit coil/furnace combination when one of them is larger than the other.
3. Set coil on adapter.
4. Ensure coil is level for proper condensate drainage. In upflow application, do not tip coil toward condensate drain. In the horizontal application, ensure coil cabinet is level side to side and front to back. It is allowable to add up to 1/2-in additional slope over length and depth of coil cabinet in the direction of drain pan connection.
5. Attach coil casing to furnace using sheet metal screws. If 8-in. spacer is required, attach coil casing to spacer and attach spacer to furnace using sheet metal screws.
6. Seal joints between coil casing, adapter (if needed, Table 6), and furnace to create an air tight seal using locally approved materials.

## Upflow Installation

**NOTE:** The furnace must be pitched for proper condensate drainage (Fig. 29).

### Supply Air Connections

For a furnace not equipped with a cooling coil, the outlet duct shall be provided with a removable access panel. This opening shall be accessible when the furnace is installed and shall be of such a size that the heat exchanger can be viewed for possible openings using light assistance or a probe can be inserted for sampling the air stream. The cover attachment shall prevent leaks.

Connect supply-air duct to flanges on furnace supply-air outlet. Bend flange upward to 90° with wide duct pliers (Fig. 27). The supply-air duct must be connected to ONLY the furnace supply-outlet-air duct flanges or air conditioning coil casing (when used). DO NOT cut main furnace casing side to attach supply air duct, humidifier, or other accessories. All supply-side accessories MUST be connected to duct external to furnace main casing.

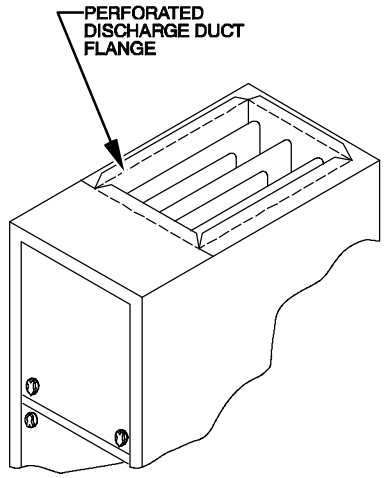


Representative drawing only, some models may vary.

**Fig. 27 - Duct Flanges**

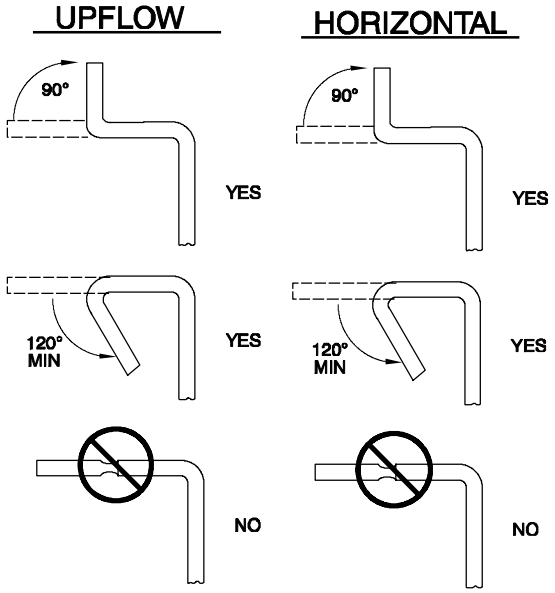


Representative drawing only, some models may vary.

A190216

Fig. 27 Duct Flanges (continued)

**NOTE**: Coil offset kits do not meet the 8–in. separation between the coil pan and furnace if required (Table 6). Additional metal shield or an extension to achieve an 8–in. total separation is required.

## Return Air Connections

**⚠ WARNING**

**FIRE HAZARD**

A failure to follow this warning could cause personal injury, death and/or property damage.

Never connect return-air ducts to the back of the furnace. Follow instructions below.

The return-air duct must be connected to bottom, sides (left or right), or a combination of bottom and side(s) of main furnace casing. Bypass humidifier may be attached into unused return air side of the furnace casing (Fig. 30 and Fig. 31).

**Bottom Return Air Inlet**

These furnaces are shipped with bottom closure panel installed in bottom return-air opening. Remove and discard this panel when bottom return air is used. To remove bottom closure panel (Fig. 34).

**Side Return Air Inlet**

These furnaces are shipped with bottom closure panel installed in bottom return-air opening. This panel MUST be in place when only side return air is used. Where required by code, seal bottom closure to furnace with tape, mastic or other durable sealing method.

**NOTE**: For allowable side returns in horizontal configurations (Fig. 31).

**Leveling Legs (If Desired)**

In upflow position with side return inlet(s), leveling legs may be used. (Fig. 28). Install field-supplied, 5/16 x 1-1/2 in. (8 x 38 mm) (max) corrosion-resistant machine bolts, washers and nuts.

**NOTE**: Bottom closure must be used when leveling legs are used. It may be necessary to remove and reinstall bottom closure panel to install leveling legs. To remove bottom closure panel (Fig. 34).

To install leveling legs:

1. Position furnace on its back. Locate and drill a hole in each bottom corner of furnace.
2. For each leg, install nut on bolt and then install bolt with nut in hole. (Install flat washer if desired.)
3. Install another nut on other side of furnace base. (Install flat washer if desired.)
4. Adjust outside nut to provide desired height, and tighten inside nut to secure arrangement.
5. Reinstall bottom closure panel if removed.

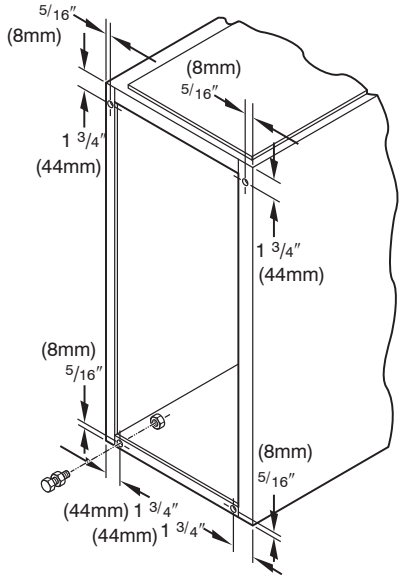


A89014

**Fig. 28 - Leveling Legs**

**⚠ CAUTION**

**CUT HAZARD**

Failure to follow this caution may result in personal injury.

Sheet metal parts may have sharp edges or burrs. Use care and wear appropriate protective clothing, safety glasses and gloves when handling parts, and servicing furnaces.

## Horizontal Installation

**NOTE:** The furnace must be pitched forward for proper condensate drainage (Fig. 29).

**⚠ WARNING**

**FIRE, EXPLOSION, AND CARBON MONOXIDE POISONING HAZARD**

Failure to follow this warning could result in personal injury, death, or property damage.

Do not install the furnace on its back or hang furnace with control compartment facing downward. Safety control operation will be adversely affected. Never connect return-air ducts to the back of the furnace.

**⚠ CAUTION**

**MINOR PROPERTY HAZARD**

Failure to follow this caution may result in minor property damage.

Local codes may require a drain pan under entire furnace and condensate trap when a condensing furnace is used in an attic application or over a finished ceiling.

The furnace can be installed horizontally in an attic or crawlspace on either the left-hand (LH) or right-hand (RH) side. The furnace can be hung from floor joists, rafters or trusses or installed on a non-combustible platform, blocks, bricks or pad.

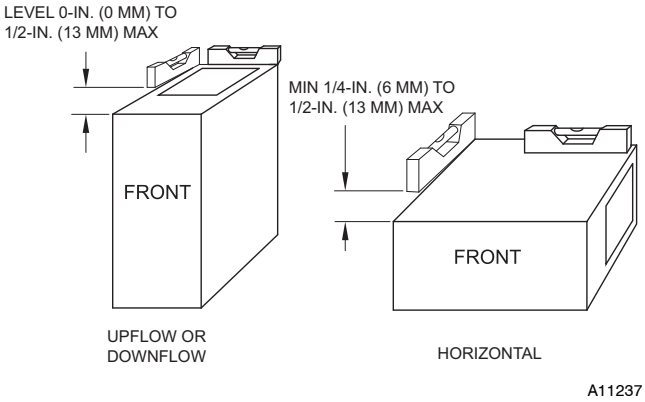


**Fig. 29 - Furnace Pitch Requirements**

### Platform Furnace Support

Construct working platform at location where all required furnace clearances are met. (Table 1 and Fig. 32) For furnaces with 1-in. (25 mm) clearance requirement on side, set furnace on non-combustible blocks, bricks or angle iron. For crawlspace installations, if the furnace is not suspended from the floor joists, the ground underneath furnace must be level and the furnace set on blocks or bricks. Condensate Trap section for required and recommended clearances for trap installation (Fig. 6, Fig 22, and Fig. 32).

### Suspended Furnace Support

The furnace must be supported under the entire length of the furnace with threaded rod and angle iron (Fig. 33). Secure angle iron to bottom of furnace as shown.

### Roll-Out Protection

Provide a minimum 12-in. x 22-in. (305 x 559 mm) piece of sheet metal for flame roll-out protection in front of burner area for furnaces closer than 12-in. (305 mm) above the combustible deck or suspended furnaces closer than 12-in. (305 mm) to joists. The sheet metal MUST extend underneath the furnace casing by 1-in. (25 mm) with the door removed.

The bottom closure panel on furnaces of widths 17-1/2-in. (445 mm) and larger may be used for flame roll-out protection when bottom of furnace is used for return air connection.

**NOTICE**

Upflow installations utilizing the right side air return opening should follow the Upflow Specific Steps - Offset Installation to ensure the full opening is available for return ductwork.

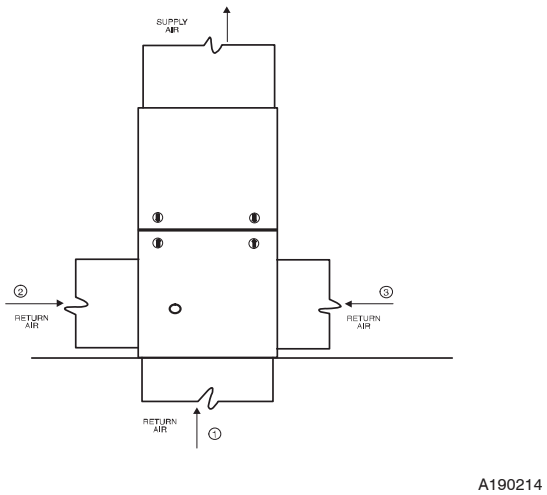


**Fig. 30 - Upflow Return Air Configurations and Restrictions**

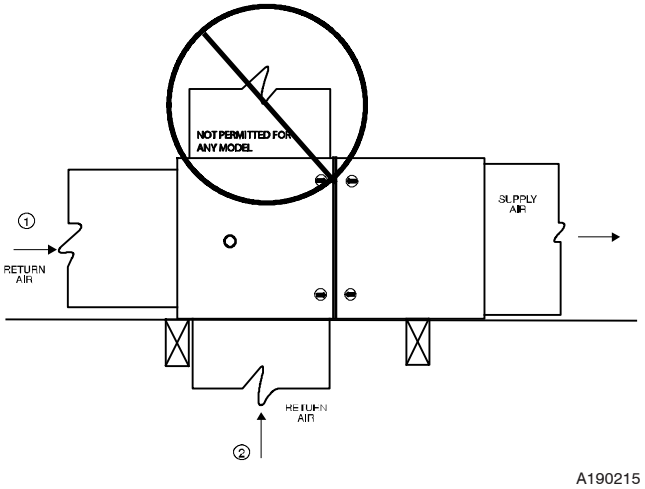


**Fig. 31 - Horizontal Return Air Configurations and Restrictions**

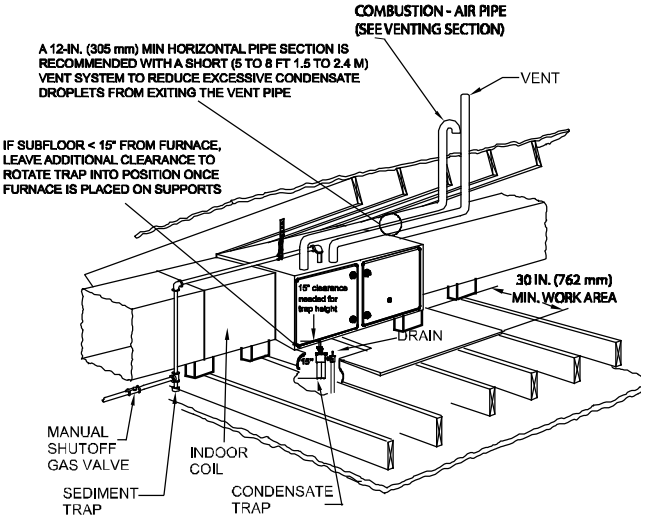


Representative drawing only, some models may vary.

A190318

**Fig. 32 - Working Platform for Attic Installation**

**NOTE**: Furnace shown is a direct vent application. Refer to the venting section for allowable vent configurations.

**NOTE**: N Coil only, add 8-in. separation between coil and furnace for all other unshielded coils. (See evaporator coil spacer or shield requirements.)

**NOTE:** Local codes may require a drain pan and condensate trap when a condensing furnace is installed over a finished ceiling.

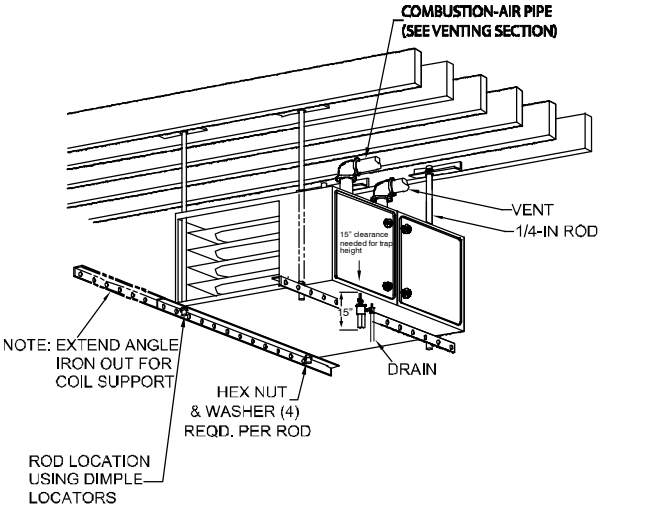


**NOTE: FURNACE SHOWN IS A DIRECT VENT APPLICATION. REFER TO THE VENTING SECTION FOR ALLOWABLE VENT CONFIGURATIONS.**

**NOTE: (N COIL ONLY, ADD 8" SEPARATION BETWEEN COIL & FURNACE FOR ALL OTHER UNSHIELDED COILS) SEE EVAPORATOR COIL SPACER OR SHIELD REQUIREMENTS.**

Representative drawing only, some models may vary.

A190306

**Fig. 33 - Suspended Furnace Installation**

**NOTE**: Furnace shown is a direct vent application. Refer to the venting section for allowable vent configurations.

**NOTE**: N Coil only, add 8-in. separation between coil and furnace for all other unshielded coils. (See evaporator coil spacer or shield requirements.)

**NOTE:** Local codes may require a drain pan and condensate trap when a condensing furnace is installed over a finished ceiling.

## Supply Air Connections

For a furnace not equipped with a cooling coil, the outlet duct shall be provided with a removable access panel. This opening shall be accessible when the furnace is installed and shall be of such a size that the heat exchanger can be viewed for possible openings using light assistance or a probe can be inserted for sampling the air stream. The cover attachment shall prevent leaks.

Connect supply-air duct to flanges on furnace supply-air outlet. Bend flange upward to 90° with wide duct pliers (Fig. 27). The supply-air duct must be connected to ONLY the furnace supply-outlet-air duct flanges or air conditioning coil casing (when used). **DO NOT** cut main furnace casing side to attach supply air duct, humidifier, or other accessories. All supply-side accessories MUST be connected to duct external to furnace main casing.

## Return Air Connections

The return-air duct may be connected to bottom of the furnace. The side of casing that faces downward may also be used for return air connection. A combination of the bottom and downward facing side may also be used. The upward facing side of the casing cannot be used as a return air connection (Fig. 31).

### Bottom Return Air Inlet

These furnaces are shipped with bottom closure panel installed in bottom return-air opening. Remove and discard this panel when bottom return air is used. To remove bottom closure panel (Fig. 34).

### Side Return Air Inlet

These furnaces are shipped with bottom closure panel installed in bottom return-air opening. This panel MUST be in place when side return air inlet(s) are used without a bottom return air inlet.

Not all horizontal furnaces are approved for side return air connections (Fig. 31). Where required by code, seal bottom closure to furnace with tape, mastic, or other durable sealing method.

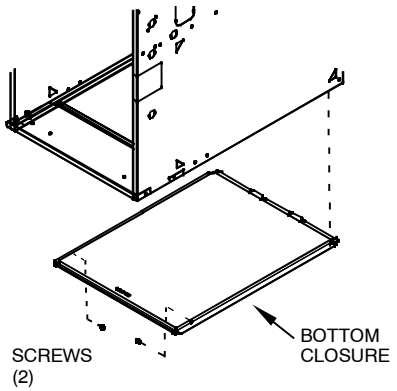


Representative drawing only, some models may vary.

A170123

1 Lay furnace on the back or side
2 Remove the two (2) screws that secure the bottom closure panel to the furnace casing and remove the panel

**Fig. 34 - Removing Bottom Closure Panel (2 Screws)**

## Filter Arrangement

**⚠ WARNING**

**FIRE, CARBON MONOXIDE AND POISONING HAZARD**

Failure to follow this warning could result in fire, personal injury or death.

Never operate a furnace without a filter or filtration device installed. Never operate a furnace with filter or filtration device access doors removed.

There are no provisions for an internal filter in these furnaces. An external filter rack is required and is purchased separately. A field supplied accessory air cleaner may also be used in place of the filter rack.

For upflow applications, the filter can be installed on either side of the furnace, the bottom of the furnace or any combination of side and bottom of the furnace (Fig. 30).

For horizontal applications, the filter rack (or field supplied accessory air cleaner) can be connected to the bottom opening on the furnace. For side return use in the horizontal position (Fig. 31). If both side and bottom openings are used (Fig. 31), each opening used will require a filter.

A filter rack or any field supplied accessory air cleaner can also be installed in the common return duct prior to entering the return air opening in any orientation.

The furnace may be used with an optional external media filter cabinet. The optional media filter cabinet uses either a standard 1-in. (25 mm) filter or 4-in. (102 mm) wide media filter which can be purchased separately. A field supplied accessory air cleaner may also be used in place of the media cabinet.

## Filter and Return Duct Sizing

Pressure drop must be taken into account when sizing filters, filter racks, IAQ devices, and associated system ductwork. For a comparison of Pressure Drop (initial/clean resistance to airflow) versus Airflow for a variety of filter media types and sizes (Table 9). These are representative numbers. Consult the filter or IAQ device manufacturers' specification sheet for performance data for a particular filter media or IAQ device.

Design the filter and associated ductwork for the best match of pressure drop versus filter size. Best practice usually chooses filter systems with pressure drops under 0.2 in. W.C. (50 Pa), with the best blower electrical efficiency and system airflow performance occurring with filter pressure drops under 0.1 in. W.C. (25 Pa).

Due to the relatively high pressure drops of 1-in. (25 mm) thick after-market filter media, it is recommended that the filtration system be designed for at least 2-in. (51 mm) thick media.

**TIPS FROM CONTRACTORS:** Install a media cabinet capable of incorporating a 4-in. (102 mm) thick media filter. This allows room for future upgrades to other IAQ devices.

**NOTICE**

Design the duct system FIRST to determine how much pressure drop may be allowed in the filter system. See the Air Ducts section. Excessive filter pressure drop often compromises system airflow and duct performance, causes inadequate airflow to the furthest ends of the duct system, as well as causes excess noise and higher than anticipated electrical consumption.

Provide duct transitions, as required, to smoothly transition airflow from the return duct system to the filter (or IAQ device) to the furnace when the dimensions of the ductwork or furnace return air opening do not match the required filter or IAQ device dimensions. See the instructions supplied with factory-accessory duct adapters.

**Table 7 – Air Filter Selection and Duct Sizing - In. (mm)**

| FURNACE CASING WIDTH | FILTER SIZE | | FILTER TYPE |
|---|---|---|---|
| | SIDE RETURN | BOTTOM RETURN | |
| 14–3/16 (360)† | 16 x 25 x 3/4 (406 x 635 x 19) | 14 x 25 x 3/4 (356 x 635 x 19) | Washable* |
| 17–1/2 (445) | 16 x 25 x 3/4 (406 x 635 x 19) | 16 x 25 x 3/4 (406 x 635 x 19) | Washable* |
| 21 (533) | 16 x 25 x 3/4 (406 x 635 x 19) | 20 x 25 x 3/4 (508 x 635 x 19) | Washable* |
| 24–1/2 (622)† | 16 x 25 x 3/4 (406 x 635 x 19) | 24 x 25 x 3/4 (610 x 635 x 19) | Washable* |

* Recommended to maintain air filter face velocity. See Product Data for part number.
† Not all families have these models.

**Table 8 – Opening Dimensions - In. (mm)**

| FURNACE CASING WIDTH IN. (mm) | APPLICATION | PLENUM OPENING | | FLOOR OPENING | |
|---|---|---|---|---|---|
| | | A | B | C | D |
| 14–3/16 (360)† | Upflow Applications on Combustible or Noncombustible Flooring (subbase not required) | 12–11/16 (322) | 21–5/8 (549) | 13–5/16 (338) | 22–1/4 (565) |
| 17–1/2 (445) | Upflow Applications on Combustible or Noncombustible Flooring (subbase not required) | 16 (406) | 21–5/8 (549) | 16–5/8 (422) | 22–1/4 (565) |
| 21 (533) | Upflow Applications on Combustible or Noncombustible Flooring (subbase not required) | 19–1/2 (495) | 21–5/8 (549) | 20–1/8 (511) | 22–1/4 (565) |
| 24–1/2 (622)† | Upflow Applications on Combustible or Noncombustible Flooring (subbase not required) | 23 (584) | 21–1/8 (537) | 23–5/8 (600) | 22–1/4 (565) |

† Not all families have these models.

**Table 9 – Filter Media Pressure Drop (Clean) Versus Airflow - In. W.C. (Pa)**

| 16x 25 Filter | | Factory-Accy Washable | | Representative After-Market Filter Media* | | | | | | | |
|---|---|---|---|---|---|---|---|---|---|---|---|
| | | | | Fiberglass* | | | | Pleated* | | | |
| CFM | L/s | (1-in. / 2.5 cm) | | (1-in. / 2.5 cm) | | (2-in. / 5 cm) | | (1-in. / 2.5 cm) | | (2-in. / 5 cm) | |
| 600 | (283) | 0.04 | (10) | 0.06 | (15) | 0.09 | (22) | 0.20 | (51) | 0.13 | (34) |
| 800 | (378) | 0.05 | (13) | 0.08 | (21) | 0.13 | (32) | 0.29 | (72) | 0.20 | (49) |
| 1000 | (472) | 0.06 | (16) | 0.11 | (28) | 0.17 | (43) | - | - | 0.27 | (67) |
| 1200 | (566) | 0.07 | (18) | 0.14 | (36) | 0.22 | (56) | - | - | - | - |
| 1400 | (661) | 0.08 | (21) | 0.18 | (45) | 0.28 | (70) | - | - | - | - |
| 1600 | (755) | 0.09 | (23) | 0.21 | (54) | - | - | - | - | - | - |
| 1800 | (850) | 0.10 | (25) | 0.26 | (64) | - | - | - | - | - | - |
| **20 x 25 Filter** | | **Factory-Accy Washable** | | **Representative After-Market Filter Media*** | | | | | | | |
| | | | | **Fiberglass*** | | | | **Pleated*** | | | |
| CFM | (L/s) | (1-in. / 2.5 cm) | | (1-in. / 2.5 cm) | | (2-in. / 5 cm) | | (1-in. / 2.5 cm) | | (2-in. / 5 cm) | |
| 800 | (378) | 0.04 | (11) | 0.06 | (16) | 0.09 | (24) | 0.22 | (55) | 0.15 | (37) |
| 1000 | (472) | 0.05 | (13) | 0.08 | (21) | 0.13 | (32) | 0.29 | (72) | 0.20 | (49) |
| 1200 | (566) | 0.06 | (15) | 0.11 | (27) | 0.16 | (41) | - | - | 0.25 | (63) |
| 1400 | (661) | 0.07 | (17) | 0.13 | (33) | 0.20 | (51) | - | - | 0.31 | (79) |
| 1600 | (755) | 0.08 | (19) | 0.16 | (40) | 0.24 | (61) | - | - | - | - |
| 1800 | (850) | 0.08 | (21) | 0.18 | (47) | 0.29 | (73) | - | - | - | - |
| 2000 | (944) | 0.09 | (23) | 0.21 | (54) | - | - | - | - | - | - |
| 2200 | (1038) | 0.09 | (24) | 0.25 | (62) | - | - | - | - | - | - |

If the filter size that you are looking for is not contained in Table 9, refer to Table 10 for a comparison of Pressure Drop (initial/clean resistance to airflow) versus Face Velocity for a variety of filter media types.

**Table 10 – Filter Media Pressure Drop (Clean) Versus Face Velocity- In. W.C. (Pa)**

| Face Velocity | | Factory-Accessory Washable | | Representative After-Market Filter Media* | | | | | | | |
|---|---|---|---|---|---|---|---|---|---|---|---|
| | | | | Fiberglass* | | | | Pleated* | | | |
| FPM | (m/s) | (1-in. / 2.5 cm) | | (1-in. / 2.5 cm) | | (2-in. / 5 cm) | | (1-in. / 2.5 cm) | | (2-in. / 5 cm) | |
| 200 | (1) | 0.04 | (10) | 0.05 | (13) | 0.08 | (20) | 0.18 | (47) | 0.12 | (31) |
| 300 | (1.5) | 0.05 | (14) | 0.09 | (22) | 0.13 | (34) | 0.30 | (75) | 0.21 | (52) |
| 400 | (2) | 0.07 | (17) | 0.13 | (32) | 0.20 | (50) | - | - | 0.31 | (78) |
| 500 | (2.5) | 0.08 | (21) | 0.18 | (44) | 0.27 | (69) | - | - | - | - |
| 600 | (3) | 0.09 | (23) | 0.23 | - | - | - | - | - | - | - |
| 700 | (3.6) | 0.10 | (26) | 0.29 | - | - | - | - | - | - | - |

* Representative estimates from filter manufacturer data sheets.
See manufacturers' specifications for pressure drop versus airflow data for specific filter media.

**Table 11 – Air Delivery - CFM (With Filter)**

| UNIT SIZE | WIRE LEAD COLOR | SPEED TAP [2, 3] (function) | EXTERNAL STATIC PRESSURE (IN.W.C.) | | | | | | | | | |
|---|---|---|---|---|---|---|---|---|---|---|---|---|
| | | | 0.1 | 0.2 | 0.3 | 0.4 | 0.5 | 0.6 | 0.7 | 0.8 | 0.9 | 1.0 |
| 48060B | Gray | Cooling. Do not use for Heating | 1670 | 1635 | 1595 | 1555 | 1515 | 1475 | 1435 | 1395 | 1360 | 1315 |
| | Yellow | Alt. Cooling. Do not use for Heating | 1465 | 1420 | 1385 | 1345 | 1310 | 1265 | 1225 | 1180 | 1135 | 1095 |
| | Blue | Heating or Alt. Cooling | 1215 | 1170 | 1125 | 1085 | 1050 | 1005 | 965 | 925 | 880 | 830 |
| | Orange | Alt. Heating or Alt. Cooling | 1120 | 1065 | 1025 | 980 | 940 | 900 | 860 | 815 | 770 | 720 |
| | Red | Alt. Cooling. Do not use for Heating | 945 | 895 | 855 | 805 | 765 | 715 | 670 | 625 | 570 | 530 |
| 60080C | Gray [5, 6] | Cooling. Do not use for Heating | 2165 | 2135 | 2115 | 2070 | 2025 | 1980 | 1930 | 1885 | 1835 | 1790 |
| | Blue [5, 6] | Heating or Alt. Cooling | 1800 | 1755 | 1715 | 1670 | 1620 | 1575 | 1525 | 1475 | 1425 | 1380 |
| | Yellow | Alt. Heating or Alt. Cooling | 1645 | 1595 | 1550 | 1510 | 1460 | 1410 | 1365 | 1315 | 1265 | 1220 |
| | Orange | Alt. Cooling. Do not use for Heating | 1505 | 1450 | 1410 | 1360 | 1310 | 1265 | 1215 | 1170 | 1120 | 1080 |
| | Red [7] | Alt. Cooling. Do not use for Heating | 885 | 785 | 705 | 645 | 570 | 495 | 430 | 360 | 295 | – |
| 60100C | Gray [5, 6] | Cooling Do not use for Heating | 2215 | 2180 | 2140 | 2100 | 2065 | 2035 | 1995 | 1960 | 1925 | 1890 |
| | Blue [5, 6] | Heating or Alt Cooling | 1890 | 1850 | 1810 | 1770 | 1730 | 1690 | 1650 | 1610 | 1565 | 1520 |
| | Yellow | Alt Cooling. Do not use for Heating | 1695 | 1650 | 1605 | 1560 | 1515 | 1475 | 1425 | 1380 | 1325 | 1280 |
| | Orange | Alt Cooling. Do not use for Heating | 1270 | 1215 | 1155 | 1100 | 1040 | 980 | 925 | 865 | 810 | 765 |
| | Red [7] | Alt Cooling. Do not use for Heating | 800 | 715 | 630 | 550 | 475 | 390 | 320 | – | – | – |

**NOTE**:

1. A filter is required for each return–air inlet. Airflow performance includes a 3/4–in. (19 mm) washable filter media such as contained in a factory–authorized accessory filter rack. See accessory list in Product Data sheet. To determine airflow performance without this filter, assume an additional 0.1 in. w.c. available external static pressure.
2. **ADJUST THE BLOWER SPEED TAPS AS NECESSARY FOR THE PROPER AIR TEMPERATURE RISE FOR EACH INSTALLATION.**
3. The "Function" column identifies which speed taps can be used for heating. Shaded areas indicate that this airflow range is BELOW THE RANGE ALLOWED FOR HEATING OPERATION. These airflow ranges may only be used for COOLING.
4. If the same motor speed tap is needed for heating and cooling, a Jumper Wire accessory kit is available, see Product Data sheet for the current Jumper Wire accessory part number. Reference the "Start–up, Adjustments, and Safety Check" section for further Jumper Wire instructions.
5. Airflows over 1800 CFM require bottom return, two–side return, or bottom and side return. A minimum filter size of 20" x 25" (508 x 635 mm) is required.
6. For upflow applications, air entering from one side into both the side of the furnace and a return air base counts as a side and bottom return.
7. The "–" entry indicates an unstable operating condition.

## AIR DUCTS

**NOTICE**

Many states, provinces and localities are considering or have implemented standards and/or restrictions on duct sizing practices, ductwork leakage, and/or ductwork thermal, airflow and electrical efficiencies. CONSULT LOCAL CODE OFFICIALS for ductwork design and performance requirements in your area.

### General Requirements

The duct system should be designed and sized according to accepted national standards such as those published by: Air Conditioning Contractors Association (ACCA Manual D), Sheet Metal and Air Conditioning Contractors National Association (SMACNA) or American Society of Heating, Refrigerating and Air Conditioning Engineers (ASHRAE) or consult *The Air Systems Design Guidelines* reference tables available from your local distributor. The duct system should be sized to handle the required system design CFM at the design external static pressure. The furnace airflow rates are provided (Table 11) CFM (with Filter). When a furnace is installed so that the supply ducts carry air circulated by the furnace to areas outside the space containing the furnace, the return air shall also be handled by duct(s) sealed to the furnace casing and terminating outside the space containing the furnace.

Secure ductwork with proper fasteners for type of ductwork used. Seal supply- and return-duct connections to furnace with code approved tape or duct sealer.

**NOTICE**

Cabinet air leakage is less than 2% at 1.0 in. W.C. Cabinet air leakage is less than 1.4% at 0.5 in. W.C. when tested in accordance with ASHRAE Standard 193.

**NOTE**: Flexible connections should be used between ductwork and furnace to prevent transmission of vibration.

Ductwork passing through unconditioned space should be insulated to enhance system performance. When air conditioning is used, a vapor barrier is recommended.

Maintain a 1-in. (25 mm) clearance from combustible materials to supply air ductwork for a distance of 36-in. (914 mm) horizontally from the furnace. See NFPA 90B or local code for further requirements.

### Return Duct Sizing

Refer to the Filter Selection and Duct Sizing section for information on the proper selection of filter sizes and the associated ductwork and duct transitions. Improperly designed filtering systems and return ductwork are the most common causes of airflow and/or noise complaints in HVAC systems.

### Ductwork Acoustical Treatment

**NOTE**: Metal duct systems that do not have a 90 degree elbow and 10 ft. (3 M) of main duct to the first branch take-off may require internal acoustical lining. As an alternative, fibrous ductwork may be used if constructed and installed in accordance with the latest edition of SMACNA construction standard on fibrous glass ducts. Both acoustical lining and fibrous ductwork shall comply with NFPA 90B as tested by UL Standard 181 for Class 1 Rigid air ducts.

**NOTE**: For horizontal applications, the top most flange may be bent past 90° to allow the evaporator coil to hang on the flange temporarily while the remaining attachment and sealing of the coil are performed.

## GAS PIPING

**⚠ WARNING**

**FIRE OR EXPLOSION HAZARD**

Failure to follow this warning could result in personal injury, death, and/or property damage.

Never purge a gas line into a combustion chamber. Never test for gas leaks with an open flame. Use a commercially available soap solution made specifically for the detection of leaks to check all connections. A fire or explosion may result causing property damage, personal injury or loss of life.

**⚠ WARNING**

**FIRE OR EXPLOSION HAZARD**

Failure to follow this warning could result in personal injury, death, and/or property damage.

Use proper length of pipe to avoid stress on gas control manifold and gas valve.

**⚠ WARNING**

**FIRE OR EXPLOSION HAZARD**

Failure to follow this warning could result in personal injury, death, and/or property damage.

Gas valve inlet and/or inlet pipe must remain capped until gas supply line is permanently installed to protect the valve from moisture and debris. Also, install a sediment trap in the gas supply piping at the inlet to the gas valve.

Gas piping must be installed in accordance with national and local codes. Refer to current edition of NFGC in the U.S.A.

Installations must be made in accordance with all authorities having jurisdiction. If possible, the gas supply line should be a separate line running directly from meter to furnace.

**NOTE**: Use a back-up wrench on the inlet of the gas valve when connecting the gas line to the gas valve.

**NOTICE**

**In the state of Massachusetts:**
1. Gas supply connections MUST be performed by a licensed plumber or gas fitter.
2. When flexible connectors are used, the maximum length shall not exceed 36 in. (915 mm).
3. When lever handle type manual equipment shutoff valves are used, they shall be T-handle valves.
4. The use of copper tubing for gas piping is NOT approved by the state of Massachusetts.

For recommended gas pipe sizing (Table 12). Risers must be used to connect to furnace and to meter. Support all gas piping with appropriate straps, hangers, etc. Use a minimum of one hanger every 6 ft. (2 M). Joint compound (pipe dope) should be applied sparingly and only to male threads of joints.

## ⚠ WARNING

**FIRE OR EXPLOSION HAZARD**

A failure to follow this warning could result in personal injury, death, and/or property damage.

If local codes allow the use of a flexible gas appliance connector, always use a new listed connector. Do not use a connector which has previously served another gas appliance. Black iron pipe shall be installed at the furnace gas control valve and extend a minimum of 2-in. (51 mm) outside the furnace.

## ⚠ CAUTION

**FURNACE DAMAGE HAZARD**

Failure to follow this caution may result in furnace damage.

Connect gas pipe to furnace using a backup wrench to avoid damaging gas controls and burner misalignment.

An accessible manual equipment shutoff valve MUST be installed external to furnace casing and within 6 ft. (2 M) of furnace.

Install a sediment trap externally in the riser leading to furnace (Fig. 37). Connect a capped nipple into lower end of tee. Capped nipple should extend below level of furnace gas controls. Place a ground joint union between furnace gas control valve and exterior manual equipment gas shutoff valve.

A 1/8-in. (3 mm) NPT plugged tapping, accessible for test gauge connection, MUST be installed immediately upstream of gas supply connection to furnace and downstream of manual equipment shutoff valve.

Piping should be pressure and leak tested in accordance with the current edition of the NFGC in the United States, local, and national plumbing and gas codes before the furnace has been connected. After all connections have been made, purge lines and check for leakage at furnace prior to operating furnace.

**NOTE**: The furnace gas control valve inlet pressure tap connection is suitable to use as test gauge connection providing test pressure DOES NOT exceed maximum 0.5 psig (14-in. w.c.) stated on gas control valve (Fig. 60).

If pressure exceeds 0.5 psig (14-in. w.c.), gas supply pipe must be disconnected from furnace and capped before and during supply pipe pressure test. If test pressure is equal to or less than 0.5 psig (14-in. w.c.), turn off electric shutoff switch located on furnace gas control valve and accessible manual equipment shutoff valve before and during supply pipe pressure test. After all connections have been made, purge lines and check for leakage at furnace prior to operating furnace.

The gas supply pressure shall be within the maximum and minimum inlet supply pressures marked on the rating plate with the furnace burners ON and OFF.

Gas entry can be from left or right side, or top panel (Fig. 35 and Fig. 36).

## Gas Pipe Grommet

For direct vent (2-pipe) applications, the knockout for the gas pipe must be sealed to prevent air leakage. Remove the knockout, install the grommet in the knockout, then insert the gas pipe. The grommet is included in the loose parts bag (Fig. 35).

**Table 12 – Maximum Capacity of Pipe**

| NOMINAL IRON PIPE SIZE IN. (MM) | LENGTH OF PIPE – FT (M) | | | | |
|---|---|---|---|---|---|
| | 10 (3.0) | 20 (6.0) | 30 (9.1) | 40 (12.1) | 50 (15.2) |
| 1/2 (13) | 175 | 120 | 97 | 82 | 73 |
| 3/4 (19) | 360 | 250 | 200 | 170 | 151 |
| 1 ( 25) | 680 | 465 | 375 | 320 | 285 |
| 1-1/4 (32) | 1400 | 950 | 770 | 660 | 580 |
| 1-1/2 (39) | 2100 | 1460 | 1180 | 990 | 900 |

* Cubic ft of gas per hr for gas pressures of 0.5 psig (14–in. w.c.) or less and a pressure drop of 0.5–in. w.c. (based on a 0.60 specific gravity gas). Ref: (Table 12) and 6.2 of NFPA54/ANSI Z223.1 (current edition).

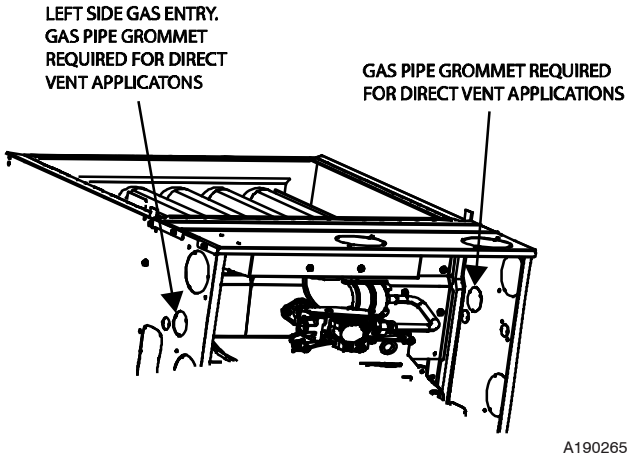


**Fig. 35 - Gas Entry**

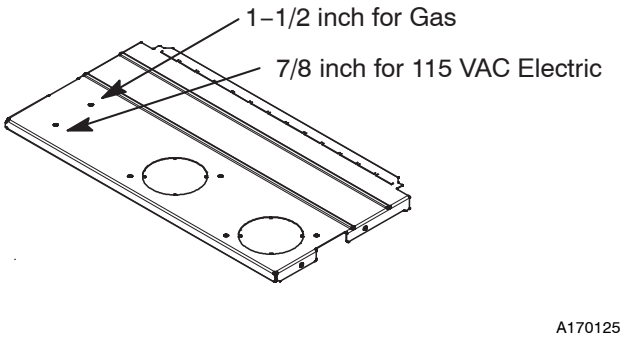


**Fig. 36 - Alternate Gas and Electric Entry**

**NOTE**: **Top plate may be field drilled for alternate gas and 115 VAC electric entry**

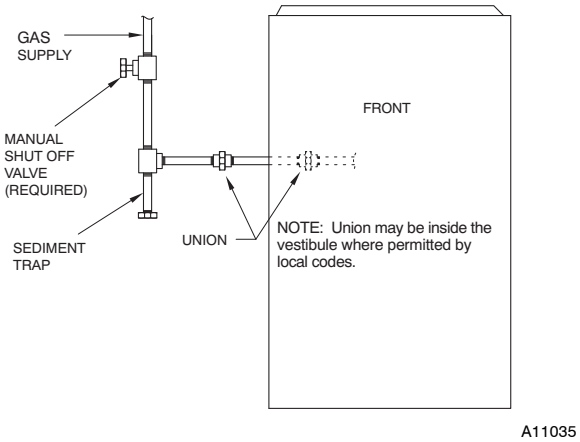


**Fig. 37 - Typical Gas Pipe Arrangement**

## ELECTRICAL CONNECTIONS

**⚠ WARNING**

**ELECTRICAL SHOCK, FIRE OR EXPLOSION HAZARD**

Failure to follow safety warnings could result in dangerous operation, serious injury, death or property damage.

Improper servicing could result in dangerous operation, serious injury, death or property damage.

- Before servicing, disconnect all electrical power to furnace.
- When servicing controls, label all wires prior to disconnection. Reconnect wires correctly.
- Verify proper operation after servicing.
- Always reinstall access doors after completing service and maintenance.

**⚠ WARNING**

**ELECTRICAL SHOCK HAZARD**

Failure to follow this warning could result in personal injury or death.

Blower door switch opens 115-v power to control. No component operation can occur. Do not bypass or close switch with blower door removed.

Field wiring diagram showing typical field 115-V wiring (Fig. 40). Check all factory and field electrical connections for tightness.

Field-supplied wiring shall conform with the limitations of 63°F (35°C) rise.

**⚠ WARNING**

**ELECTRICAL SHOCK AND FIRE HAZARD**

Failure to follow this warning could result in personal injury, death, or property damage.

The cabinet MUST have an uninterrupted or unbroken ground according to NEC NFPA 70 or local codes to minimize personal injury if an electrical fault should occur. This may consist of electrical wire, conduit approved for electrical ground or a listed, grounded power cord (where permitted by local code) when installed in accordance with existing electrical codes. Refer to the power cord manufacturer's ratings for proper wire gauge. Do not use gas piping as an electrical ground.

**⚠ CAUTION**

**FURNACE MAY NOT OPERATE HAZARD**

Failure to follow this caution may result in intermittent furnace operation.

Furnace control must be grounded for proper operation or else control will lock out. Control must remain grounded through green/yellow wire routed to gas valve and manifold bracket screw.

### 115-V Wiring

Furnace must have a 115-v power supply properly connected and grounded.

**NOTE**: Proper polarity must be maintained for 115-v wiring. If polarity is incorrect, control LED status indicator light will flash rapidly and furnace will **NOT** operate.

Verify that the voltage, frequency, and phase correspond to that specified on unit rating plate. Also, check to be sure that service provided by utility is sufficient to handle load imposed by this equipment. Refer to rating plate or equipment electrical specifications (Table 13).

**U.S.A. Installations**: Make all electrical connections in accordance with the current edition of the National Electrical Code (NEC) NFPA 70 and any local codes or ordinances that might apply.

**⚠ WARNING**

**FIRE HAZARD**

Failure to follow this warning could result in personal injury, death, or property damage.

Do not connect aluminum wire between disconnect switch and furnace. Use only copper wire (Fig. 39).

Use a separate, fused branch electrical circuit with a properly sized fuse or circuit breaker for this furnace. For wire size and fuse specifications (Table 13). A readily accessible means of electrical disconnect must be located within sight of the furnace

### J-Box Installation

**⚠ WARNING**

**FIRE OR ELECTRICAL SHOCK HAZARD**

Failure to follow this warning could result in personal injury, death, or property damage.

High voltage field connections must be located in J-Box with furnace, or in field supplied external disconnect mounted to furnace.

If field-supplied manual disconnect switch is to be mounted on furnace casing side, select a location where a drill or fastener cannot damage electrical or gas components.

The J-Box must be used when field line voltage electrical connections are made to the furnace wiring harness inside the furnace casing. The J-Box cover is not required if a field-supplied external electrical box is attached to the outside of the furnace casing. The field ground wire and furnace main ground wire are grounded when the J-Box bracket is attached to the furnace and the field ground wire and factory ground wire are secured to the bracket grounding screw. If the J-Box cover is not used, the field and factory spliced connections must be located inside the external electrical box. Do not leave splice connections unprotected inside the furnace.

The J-Box cover, mounting bracket and screws are shipped in the loose parts bag included with the furnace. J-Box mounting locations (Fig. 38).

The J-Box mounting bracket and green ground screw is used as a grounding point for all line voltage wiring options. The J-Box cover may be omitted when electrical connections are made inside an external electrical box mounted external to the casing.

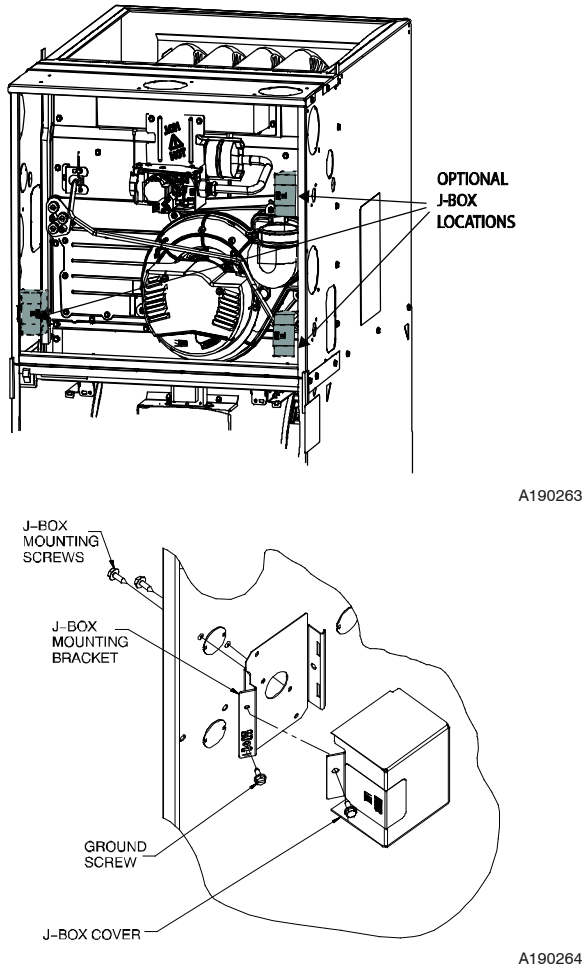


**Fig. 38 - Installing J-Box (When Used)**

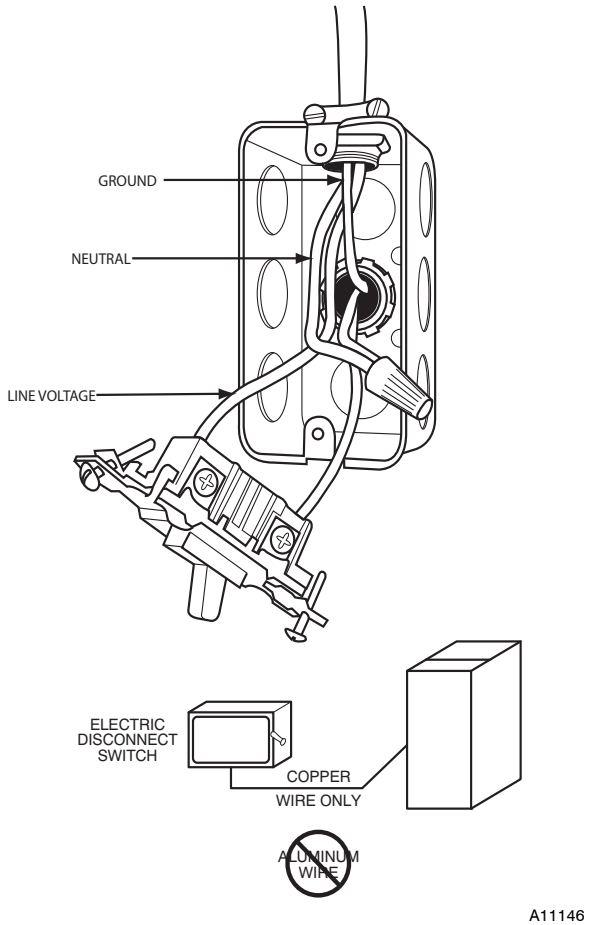


**Fig. 39 - Field-Supplied External Electrical Box on Furnace Casing**

## External Electrical Box on Furnace Casing

**NOTE**: Check to ensure that external electrical box does not interfere with duct work, gas piping or the indoor coil drain. Alternate electric entry through top panel (Fig. 36).

1. Select and remove 7/8-in. (22 mm) knock-out on the desired side of the casing. Remove the knock-out from the casing.

**NOTE**: If electrical entry through the furnace top panel is used, a 7/8-in. (22 mm) hole must be drilled through the top panel.

2. Drill two (2) 1/8-in. (3 mm) pilot holes through the dimples in the furnace casing near the 7/8-in. knock-out.

**NOTE**: If electrical entry through the furnace top panel is used, mark the screw hole locations using the mounting holes in the external electrical box as a template.

**For a side-mounted external electrical box, complete the following:**

1. Align the J-Box bracket with the knock-out inside the furnace casing.
2. Install the threaded end of a strain-relief bushing through the J-Box bracket and the furnace casing. Strain-relief bushing should be installed so that the bushing can be tightened around the wiring harness inside the furnace casing.
3. Align the external electrical box with the 7/8-in. (22 mm) knock-out.
4. Install and tighten the lock-nut on the strain-relief bushing inside the external electrical box.
5. Fasten the external electrical box to the furnace casing using two (2) sheet metal screws.
6. Route field power wiring into external electrical box.
7. Pull furnace line voltage power wires through strain-relief bushing of the external electrical box.
8. Pull the ground wire of the field line voltage wiring through the strain-relief bushing into the furnace casing.
9. Install the green ground screw to the J-Box bracket and attach both ground wires to the green ground screw.
10. Connect any code required external disconnect(s) to field power wiring.
11. Connect field power and neutral leads to furnace power leads inside the external electrical box (Fig. 32).

**For a top panel-mounted external electrical box, complete the following:**

1. Drill two (2) 1/8-in. (3 mm) pilot holes through the dimples in the furnace casing near the 7/8-in. knock-out on the side of the casing. Do not remove the knock-out in the side of the casing.
2. Align the J-Box bracket with the pilot holes inside the furnace casing.
3. Install 2 screws through the outside of the casing to secure the J-Box bracket to the furnace casing.
4. Route field power wiring into external electrical box.
5. Pull furnace line voltage power wires through strain-relief bushing of the external electrical box.
6. Pull the ground wire of the field line voltage wiring through the strain-relief bushing into the furnace casing.
7. Install the green ground screw to the J-Box bracket and attach both ground wires to the green ground screw.
8. Connect any code required external disconnect(s) to field power wiring.

9. Connect field power and neutral leads to furnace power leads inside the external electrical box (Fig. 34).

### Power Cord Installation in Furnace J-Box

**NOTE**: Power cords must be able to handle the electrical requirements (Table 13). Refer to power cord manufacturer's listings.

1. Install J-Box mounting bracket to inside of furnace casing (Fig. 38).
2. Route listed power cord through 7/8-in. (22 mm) diameter hole in casing and J-Box bracket.
3. Secure power cord to J-Box bracket with a strain relief bushing or a connector approved for the type of cord used.
4. Pull furnace power wires through 1/2-in. (12 mm) diameter hole in J-Box. If necessary, loosen power wires from strain—relief wire-tie on furnace wiring harness.
5. Connect field ground wire and factory ground wire to green ground screw on J-Box mounting bracket (Fig. 38).
6. Connect power cord power and neutral leads to furnace power leads (Fig. 40).
7. Attach furnace J-Box cover to mounting bracket with screws supplied in loose parts bag. Do not pinch wires between cover and bracket (Fig. 38).

### BX Cable Installation in Furnace J-Box

1. Install J-Box mounting bracket to inside of furnace casing (Fig. 38).
2. Route BX connector through 7/8-in. (22 mm) diameter hole in casing and J-Box bracket.
3. Secure BX cable to J-Box bracket with connectors approved for the type of cable used.
4. Connect field ground wire and factory ground wire to green ground screw on J-Box mounting bracket (Fig. 38).
5. Connect field power and neutral leads to furnace power leads (Fig. 40).
6. Attach furnace J-Box cover to mounting bracket with screws supplied in loose parts bag. Do not pinch wires between cover and bracket.

**⚠ WARNING**

**FIRE, EXPLOSION, ELECTRICAL SHOCK, AND CARBON MONOXIDE POISONING HAZARD**

Failure to follow this warning could result in dangerous operation, personal injury, death, or property damage.

Do not drill into blower shelf of furnace to route control wiring. Route any control or accessory wiring to the blower compartment through external knockouts on the casing.

## 24-V Wiring

Make field 24-v connections at the 24-v terminal strip. (Fig. 41) Connect terminal Y (Fig. 67) for proper cooling operation. Use only AWG No. 18, color-coded, copper thermostat wire.

**ACCESSORIES**

1. Electronic Air Cleaner (EAC)
   Connect an accessory Electronic Air Cleaner (if used) using 1/4-in female quick connect terminals to the two male 1/4-in quick-connect terminals on the control board marked EAC and NEUTRAL. The terminals are rated for 115 VAC, 1.0 amps maximum and are energized during blower motor operation.
2. Humidifier (HUM)
   Connect an accessory 115 VAC, 1 amp. maximum humidifier (if used) to the 1/4-in male quick-connect HUM terminal and NEUTRAL 1/4-in quick connect. The HUM terminal is energized when the blower starts during a call for heat.

**NOTE**: A field-supplied, 115-v controlled relay connected to EAC terminals may be added if humidifier operation is desired during blower operation.

**NOTE**: DO NOT connect furnace control HUM 115VAC terminal to H (humidifier) terminal on humidity sensing thermostat, or similar device. See humidity sensing thermostat, thermostat, or controller manufacturer's instructions for proper connection.

**NOTE**: Use AWG No. 18 color-coded copper thermostat wire for lengths up to 100 ft. (31 M). For wire lengths over 100 ft., use AWG No. 16 wire.

The 24-v circuit contains an automotive-type, 3-amp. fuse located on the control. Any direct shorts during installation, service, or maintenance could cause this fuse to blow. If fuse replacement is required, use ONLY a 3-amp. fuse of identical size (Fig. 41).

## Alternate Power Supplies

This furnace is designed to operate on utility generated power which has a smooth sinusoidal waveform. If the furnace is to be operated on a generator or other alternate power supply, the alternate power supply must produce a smooth sinusoidal waveform for compatibility with the furnace electronics. The alternate power supply must generate the same voltage, phase, and frequency (Hz) (Table 13) or the furnace rating plate.

Power from an alternate power supply that is non-sinusoidal may damage the furnace electronics or cause erratic operation.

Contact the alternate power supply manufacturer for specifications and details.

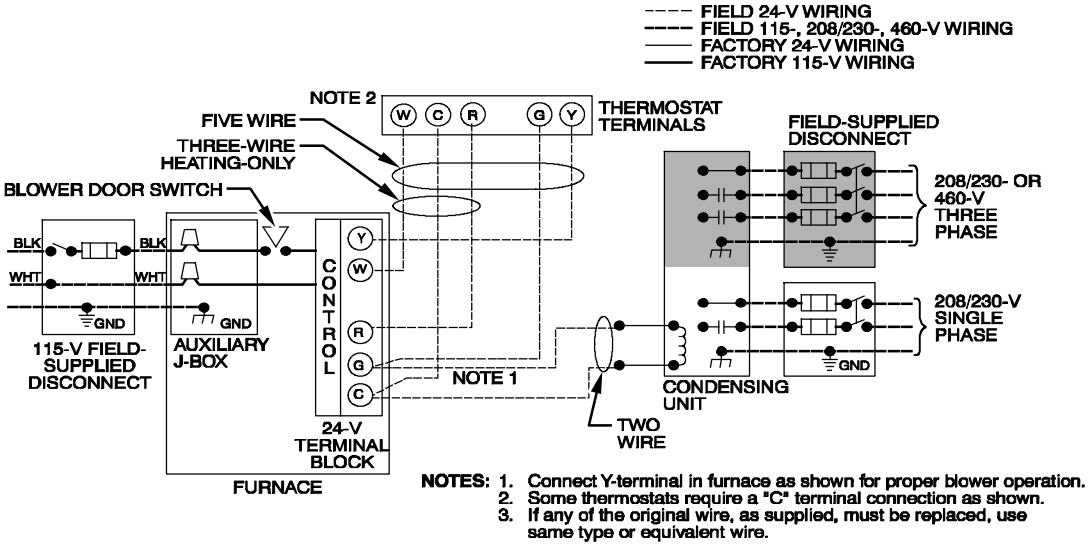


Representative drawing only, some models may vary.

A180241

**Fig. 40 - Typical Single-Stage Wiring Diagram**

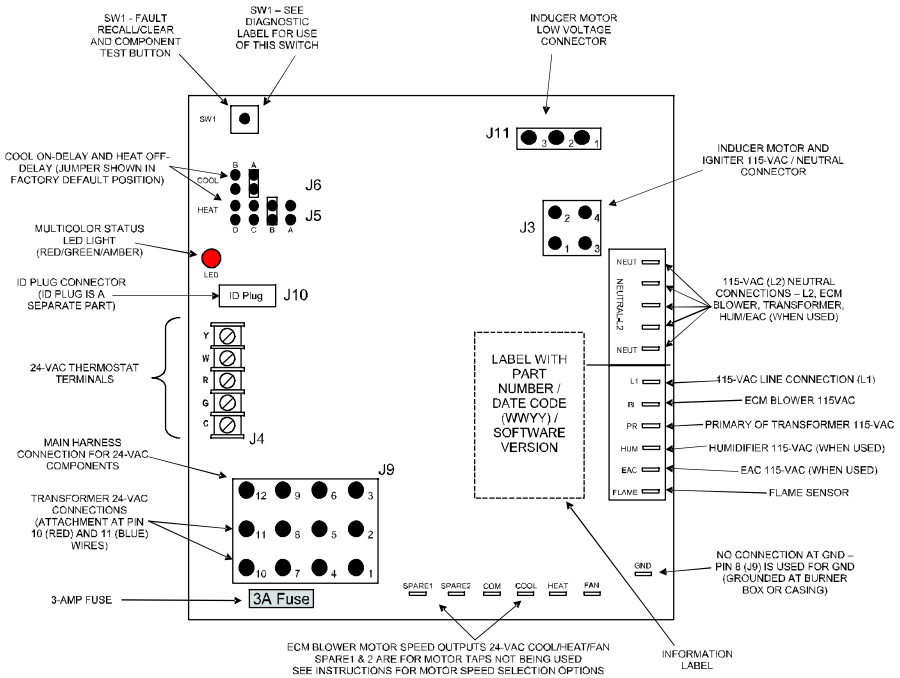


A180213

**Fig. 41 - Example of Single Stage Furnace Control**

**Table 13 – Electrical Data**

| FURNACE SIZE | VOLTS–HERTZ–PHASE | OPERATING VOLTAGE RANGE* | | MAXIMUM UNIT AMPS | UNIT AMPA-CITY# | MINIMUM WIRE SIZE AWG | MAXIMUM WIRE LENGTH FT (M)‡ | MAXIMUM FUSE OR CKT BKR AMPS† |
|---|---|---|---|---|---|---|---|---|
| | | Maximum* | Minimum* | | | | | |
| 48060B | 115–60–1 | 127 | 104 | 10.9 | 14.2 | 14 | 26.2 | 15 |
| 60080C | 115–60–1 | 127 | 104 | 13.6 | 17.6 | 12 | 32.8 | 20 |
| 60100C | 115–60–1 | 127 | 104 | 13.6 | 17.6 | 12 | 32.8 | 20 |

* Permissible limits of the voltage range at which the unit operates satisfactorily.
# Unit ampacity = 125 percent of largest operating component's full load amps plus 100 percent of all other potential operating components' (EAC, humidifier, etc.) full load amps.
†Time–delay type is recommended.
‡Length shown is as measured one way along wire path between furnace and service panel for maximum 2 percent voltage drop.

# VENTING

## ⚠ WARNING

**CARBON MONOXIDE POISONING HAZARD**

Failure to follow the steps outlined below for each appliance connected to the venting system being placed into operation could result in carbon monoxide poisoning or death.

The following steps shall be followed for each appliance connected to the venting system being placed into operation, while all other appliances connected to the venting system are not in operation:

1. Seal any unused openings in venting system.
2. Inspect the venting system for proper size and horizontal pitch, as required in the National Fuel Gas Code, ANSI Z223.1/NFPA 54 or the CSA B149 Natural Gas and Propane Installation Code and these instructions. Determine that there is no blockage or restriction, leakage, corrosion and other deficiencies, which could cause an unsafe condition.
3. As far as practical, close all building doors and windows and all doors between the space in which the appliance(s) connected to the venting system are located and other spaces of the building.
4. Close fireplace dampers.
5. Turn on clothes dryers and any appliance not connected to the venting system. Turn on any exhaust fans, such as range hoods and bathroom exhausts, so they are operating at maximum speed. Do not operate a summer exhaust fan.
6. Follow the lighting instructions. Place the appliance being inspected into operation. Adjust the thermostat so appliance is operating continuously.
7. Test for spillage from draft hood equipped appliances at the draft hood relief opening after 5 minutes of main burner operation. Use the flame of a match or candle.
8. If improper venting is observed during any of the above tests, the venting system must be corrected in accordance with the National Fuel Gas Code, ANSI Z223.1/NFPA 54 and/or CSA B149.1 Natural Gas and Propane Installation Code.
9. After it has been determined that each appliance connected to the venting system properly vents when tested as outlined above, return doors, windows, exhaust fans, fireplace dampers and any other gas-fired burning appliance to their previous conditions of use.

**NOTE**: Planning for the venting system should be done in conjunction with planning for the ductwork, drainage, and furnace accessories, such as air cleaners and humidifiers. Begin assembling the venting system **AFTER** the furnace is set in place in the required orientation.

Venting for this furnace shall follow all Local codes for Category IV venting systems. This furnace is CSA approved for venting with PVC/ABS DWV venting systems. This furnace is also CSA approved for venting with M&G DuraVent® PolyPro® polypropylene venting systems.

**NOTE**: THESE INSTRUCTIONS **DO NOT** CONTAIN DETAILED INSTALLATION INSTRUCTIONS FOR POLYPROPYLENE VENTING SYSTEMS. Refer to the polypropylene venting system manufacturer's installation instructions for the polypropylene venting system installation.

**NOTE**: When using polypropylene venting systems, all venting materials used, including the vent terminations, must be from the same manufacturer.

## General

If this furnace replaces a furnace that was connected to a vent system or chimney, the vent or vent connectors of other remaining appliances may need to be re-sized. Vent systems or vent connectors of other appliances must be sized to the minimum size as determined using appropriate table found in the current edition of National Fuel Gas Code NFPA 54/ANSI Z-223.1.

An abandoned masonry chimney may be used as a raceway for properly insulated and supported combustion-air (when applicable) and vent pipes. Each furnace must have its own set of combustion-air and vent pipes and be terminated individually for Direct Vent (2-Pipe) system (Fig. 56), for single-pipe or ventilated combustion air option (Fig. 57).

A furnace shall not be connected to a chimney flue serving a separate appliance designed to burn solid fuel.

Other gas appliances with their own venting system may also use the abandoned chimney as a raceway providing it is permitted by local code, the current edition of the National Fuel Gas Code, and the vent or liner manufacturer's installation instructions. Care must be taken to prevent the exhaust gases from one appliance from contaminating the combustion air of other gas appliances.

Do not take combustion air from inside the chimney when using ventilated combustion air or single-pipe vent option.

These furnaces can be vented as direct-vent (two-pipe), ventilated combustion air or non-direct (single-pipe) vent system. Each type of venting system is described below. Common venting between these furnaces or other appliances is prohibited.

## Materials

Combustion air and vent pipe, fittings, primers, and solvents must conform to American National Standards Institute (ANSI) standards and American Society for Testing and Materials (ASTM) standards. For approved materials for use in the U.S.A. (Table 16). This furnace is also CSA approved for venting with M&G DuraVent® PolyPro® polypropylene venting systems.

**NOTE**: When using polypropylene venting systems, all venting materials used, including the vent terminations must be from the same manufacturer.

## Venting Systems

## ⚠ WARNING

**CARBON MONOXIDE POISONING HAZARD**

Failure to follow the instructions outlined below for each appliance being placed into operation could result in carbon monoxide poisoning or death.

For all venting configurations for this appliance and other gas appliances placed into operation for this structure, provisions for adequate combustion, ventilation, and dilution air must be provided in accordance with:
Current edition of Section 9.3 NFPA 54/ANSI Z223.1, Air for Combustion and Ventilation and applicable provisions of the local building codes.

## NOTICE

**RECOMMENDED SUPPORT FOR VENT TERMINATION**

It is recommended that sidewall vent terminations of over 24 inches (0.6 M) in length or rooftop vent terminations of over 36 inches (1 M) in length be supported by EITHER the factory accessory vent termination kit or field-supplied brackets or supports attached to the structure. A factory accessory vent termination kit may be used for direct vent terminations. Termination kits are available for 2-in. or 3-in. pipe. For available options (Table 14).

**Table 14 – Vent Termination Kit for Direct Vent (2-pipe) Systems**

| Vent and Combustion Air Pipe Diameters | Approved Two- Pipe Termination Fittings | | | | | Allowable Concentric Vent Kit |
|---|---|---|---|---|---|---|
| | 1 1/2-in. (38 mm) | 2-in. (51 mm) | 2 1/2-in. (64 mm) | 3-in. (76-mm) | 4-in. (102 mm) | |
| 1 1/2-in. (38 mm) | No | Yes | No | No | No | 2-in. (51 mm) |
| 2-in. (51 mm) | No | Yes | No | No | No | 2-in. (51 mm) |
| 2 1/2-in. (64 mm) | No | No | No | Yes | No | 2-in. (51 mm)<br>3-in. (76 mm) |
| 3-in. (76-mm) | No | No | No | Yes | No | 3-in. (76 mm) |
| 4-in. (102 mm) | No | No | No | Yes | Yes | 3-in. (76 mm) |

### Direct Vent / 2-Pipe System

In a direct-vent (2-pipe) system, all air for combustion is taken directly from outdoor atmosphere, and all flue products are discharged to outdoor atmosphere. Combustion-air and vent pipes must terminate together in the same atmospheric pressure zone, either through the roof (preferred) or a sidewall. For references to clearances required by National code authorities (Fig. 54).

**NOTICE**

**OPTIONAL CONFIGURATION FOR COMBUSTION AIR INLET PIPE**

In applications where there is a risk of excessive moisture entering the combustion air inlet pipe, a moisture trap may be added to the inlet pipe to help prevent moisture from entering the furnace from the combustion air inlet pipe. (Fig. 43)

When sizing venting systems, the equivalent length of the optional inlet pipe moisture trap must be taken into account.

**⚠ WARNING**

**CARBON MONOXIDE POISONING HAZARD**

Failure to follow the instructions outlined below for each appliance being placed into operation could result in carbon monoxide poisoning or death.

The instructions included with this furnace **DO NOT APPLY** to vent systems that are located below the furnace. **CAREFULLY FOLLOW THE INSTRUCTIONS PROVIDED WITH THE EXTERNAL VENT TRAP KIT FOR LAYING OUT THE VENTING SYSTEM AND THE DRAIN SYSTEM** when all or part of the venting system is placed below the furnace.

Proper configuration of the venting and drain system is critical when placing all or part of the venting system below the level of the furnace. **VENT GASSES COULD BE RELEASED FROM THE DRAINAGE SYSTEM** if the instructions provided with the External Vent Trap Kit are not followed.

### Ventilated Combustion Air Systems

In a ventilated combustion air option, the vent terminates and discharges the flue products directly to the outdoors similar to a direct vent system. References to clearances required by National code authorities (Fig. 55)

All air for combustion is piped directly to the furnace from a space that is well ventilated with outdoor air (such as an attic or crawl space) and the space is well isolated from the living space or garage. Combustion air requirements for this option are the same as the requirements for providing outside air for combustion for a single pipe vent system. Refer to the “Air For Combustion and Ventilation” Section.

### Non-Direct Vent (1-pipe) System

In a non direct-vent (1-pipe) system, all air for combustion is taken from the area adjacent to furnace, and all flue products are discharged to outdoor atmosphere. Air for combustion must be supplied as described in the Air For Combustion and Ventilation Section. Do not use an abandoned chimney to supply outside air to the furnace. References to vent clearances required by National code authorities (Fig. 55).

## Locating the Vent Termination

### General

Combustion-air inlet pipe (direct vent/2-pipe system only) and vent pipe must terminate outside structure, either through sidewall or roof.

Special termination requirements may be required in other Canadian provinces. Refer to the authority having jurisdiction for clarification and/or additional clearance requirements.

For vent termination clearance, references to National codes for Direct Vent/2-Pipe system (Fig. 54) and for Ventilated Combustion Air/Non-direct Vent/1-Pipe system (Fig. 55). For exterior termination arrangements, for Direct Vent/2-Pipe system (Fig. 56) and for Ventilated Combustion Air/Non-Direct/1-Pipe system (Fig. 57). Contact Local code authorities for other requirements to and/or exemptions from the National codes shown in the figures.

Roof termination is often preferred since it is less susceptible to damage or contamination, is usually located away from adjacent structures, is less prone to icing conditions, and and it often has less visible vent vapors. Sidewall terminations may require sealing or shielding of building surfaces with a corrosive resistance material due to the corrosive properties of combustion products from the vent system, as well as protection of adjacent structures.

Roof termination is the recommended termination location. Roof terminations provide better performance against sustained prevailing winds. The roof location is preferred since the vent and combustion air system is less susceptible to damage or contamination. The termination is usually located away from adjacent structures or other obstacles such as inside corners, windows, doors or other appliances. It is less prone to icing conditions, and it often has less visible vent vapors.

Sidewall terminations may require sealing or shielding of building surfaces with a corrosive resistance material due to the corrosive properties of combustion products from the vent system, as well as protection of adjacent structures.

# NOTICE

**RECOMMENDED SUPPORT FOR VENT TERMINATIONS**

It is recommended that sidewall vent terminations in excess of 24 inches (0.6 M) or rooftop terminations in excess of 36 inches (1 M) in vertical length be supported by **EITHER** the Direct Vent Termination Kit (Table 14) or by field-supplied brackets or supports fastened to the structure.

When determining appropriate location for termination, consider the following guidelines:

1. Comply with all clearance requirements stated (Fig. 54 or Fig. 55) per application.
2. The vent termination must be located at least 3 feet from an inside corner and follow the clearance distances in the Inside Corner Termination drawing.
3. Termination or termination kit should be positioned where vent vapors will not damage plants/shrubs, air conditioning equipment or utility meters.
4. Do not locate termination directly into prevailing winds. Termination should be positioned so that it will not be affected by sustained prevailing winds over 30 mph, wind eddy, such as inside building corners, or by recirculation of flue gases, airborne leaves, or light snow.
5. Termination or termination kit should be positioned where it will not be damaged by or subjected to foreign objects such as stones, balls, etc.
6. Termination or termination kit should be positioned where vent vapors are not objectionable.

### Direct Vent / 2-Pipe System

Direct vent (2-pipe) vent and combustion air pipes must terminate outside the structure. For references to vent clearances required by National code authorities (Fig. 54). Allowable vent and combustion air terminations (Fig. 56).

# ⚠ WARNING

**CARBON MONOXIDE POISONING HAZARD**

Failure to follow the instructions outlined below for each appliance being placed into operation could result in carbon monoxide poisoning or death.

For all venting configurations for this appliance and other gas appliances placed into operation for the structure, provisions for adequate combustion, ventilation, and dilution air must be provided in accordance with:
Current edition of Section 9.3 NFPA 54/ANSI Z223.1 Air for Combustion and Ventilation and applicable provisions of the local building codes.

### Ventilated Combustion Air

The vent pipe for a Ventilated Combustion Air System must terminate outdoors. For references to vent clearances required by National code authorities (Fig. 55). Allowable vent terminations (Fig. 57). The combustion air pipe terminates in a well-ventilated attic or crawl space. Follow the clearances (Fig. 58).

The combustion air pipe cannot terminate in attics or crawl spaces that use ventilation fans designed to operate in the heating season. If ventilation fans are present in these areas, the combustion air pipe must terminate outdoors as a Direct Vent System.

### Non-Direct Vent / 1-Pipe System

The vent pipe for a Non Direct Vent (1-pipe) system must terminate outdoors. References to vent clearances required by National Code authorities (Fig. 55). Allowable vent terminations (Fig. 57).

A combustion air inlet pipe to the outdoors is not required for a Non-Direct (single-pipe) Vent System. A 12-in. long section of pipe with a tight radius 2-in. (51 mm) 90 degree elbow is required to be attached to the furnace. (Fig. 42) This short inlet air pipe helps to ensure stable combustion, as well as allow for sound attenuation. To aid sound attenuation, point the inlet air pipe away from occupants. An extra elbow and/or five feet of pipe may be used to accomplish the sound attenuation function.

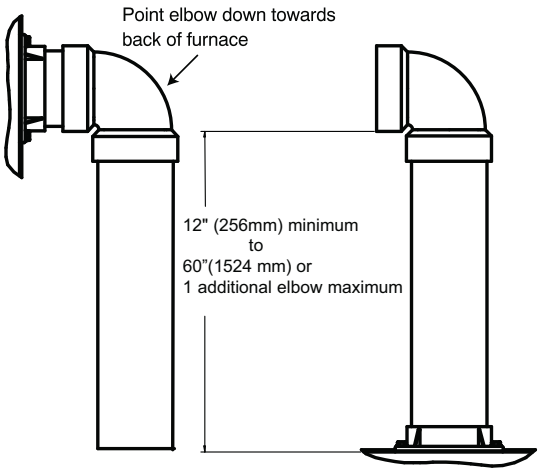


CASING SIDE OR TOP ATTACHMENT
COMBUSTION AIR PIPE
(NON-DIRECT VENT FOR ALL MODELS EXCEPT MODULATING UNLESS INSTALLED IN ATTIC OR CRAWL SPACE)

A13406

**Fig. 42 - Combustion Air Pipe Attachment**

## Size the Vent and Combustion Air Pipes

### General

Furnace combustion air and vent pipe connections are sized for 2-in. (50 mm ND) PVC/ABS DWV pipe. The combustion air and vent pipe connections also accommodate 60 mm polypropylene venting systems with outside diameters of approximately 60 mm (2-3/8 inches). Any pipe diameter change should be made outside furnace casing in vertical pipe. Any change in diameter to the pipe must be made as close to the furnace as reasonably possible (Fig. 45).

The Maximum Vent Length for the vent and combustion air pipe (when used) is determined from the Maximum Equivalent Vent Length (Table 18) minus the number of fittings multiplied by the deduction for each type of fitting used (Table 19).

# NOTICE

**OPTIONAL CONFIGURATION FOR COMBUSTION AIR INLET PIPE**

In applications where there is a risk of excessive moisture entering the combustion air inlet pipe, a moisture trap may be added to the inlet pipe to help prevent moisture from entering the furnace from the combustion air inlet pipe. (Fig. 43).

When sizing venting systems, the equivalent length of the optional moisture trap (15 feet/5 M) must be taken into account.

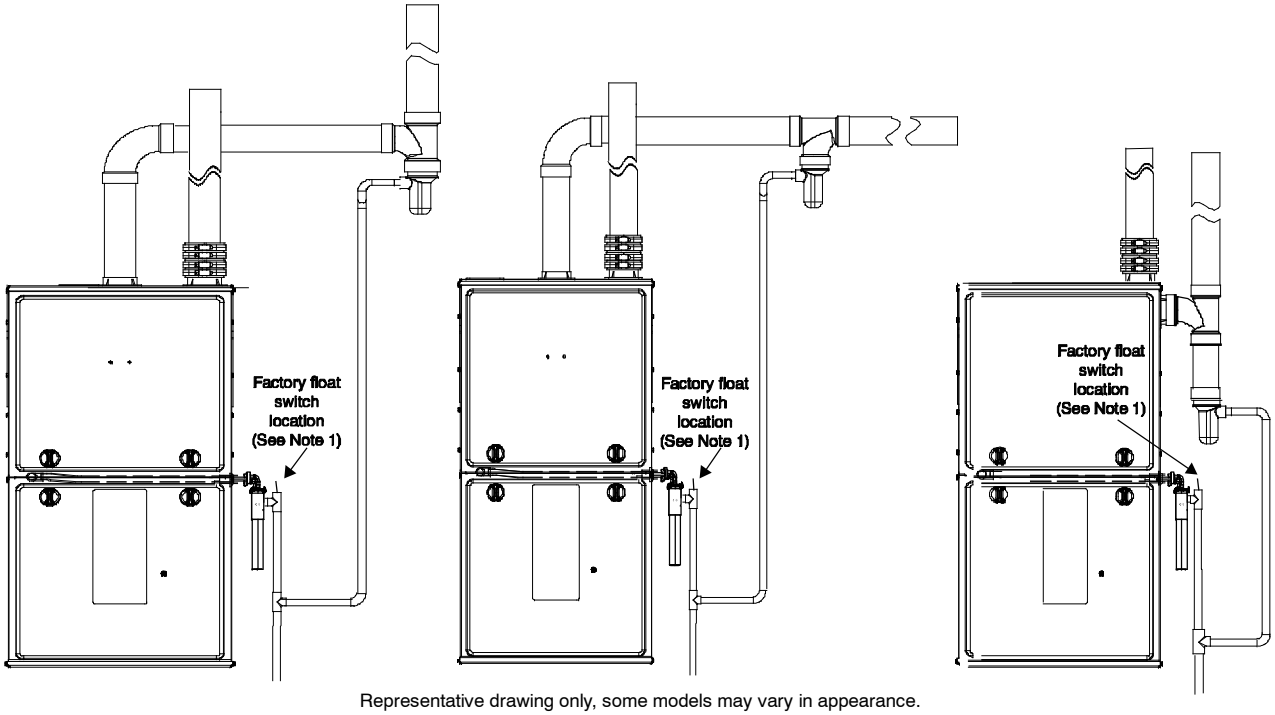


Representative drawing only, some models may vary in appearance.

A190290

**NOTE**: Do **NOT** alter the location of the factory-provided float switch on the furnace condensate trap assembly.

**NOTE**: Only connect combustion air inlet moisture drain downstream of the furnace trap assembly as shown.

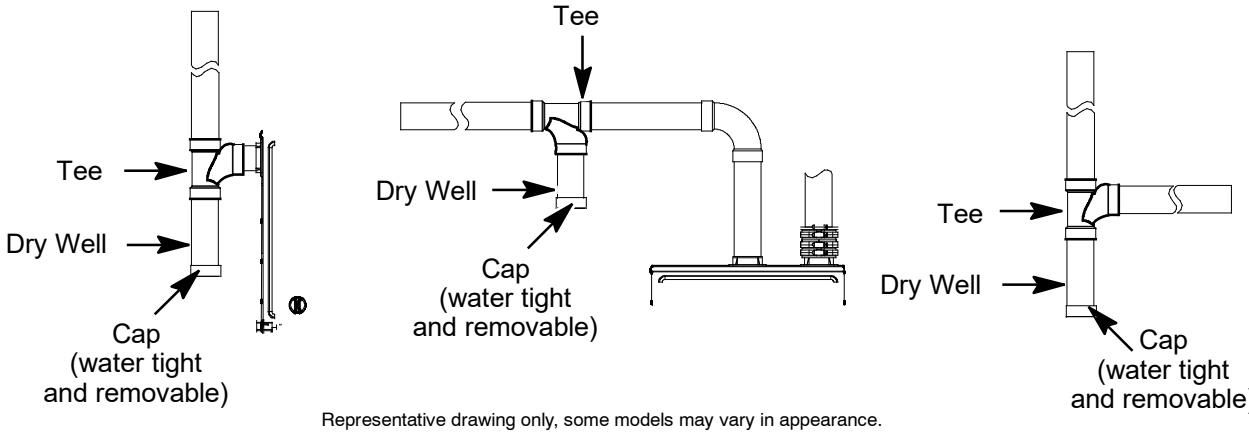


Representative drawing only, some models may vary in appearance.

A170122A

**Fig. 43 - Recommended Combustion Air Inlet Moisture Trap**

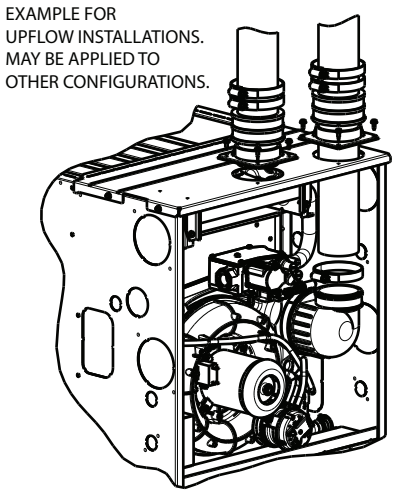


Representative drawing only, some models may vary.

A12220

**Fig. 44 - Sample Inlet Air Pipe Connection for Polypropylene Venting Systems**

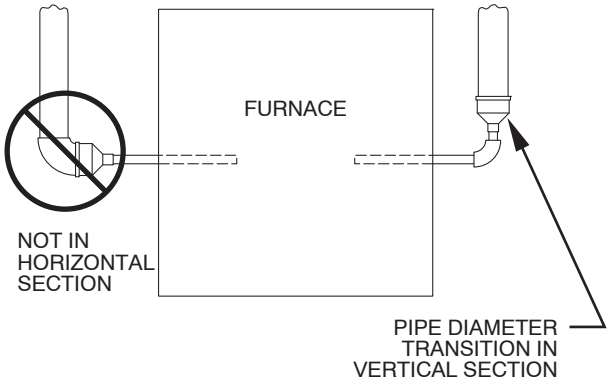


A93034

**Fig. 45 - Combustion Air and Vent Pipe Diameter Transition Location and Elbow Configuration**

### Recommended Combustion Air Inlet Moisture Trap

Recommended to prevent moisture from trickling into the furnace vestibule, a trap can be installed in the intake air pipe near the furnace. To prevent moisture, connecting a drain line to the trap is recommended as trace amounts of moisture will evaporate into the intake air stream. If the combustion air inlet is located near a moisture exhaust duct, or there are other concerns of excessive moisture being drawn into the combustion air inlet, it is encouraged to connect a drain line to the trap.

The trap can be constructed from a running tee of the same diameter of the intake air pipe with **EITHER** a removable cap attached to a 6-inch long pipe connected to the tee or the External Vent Trap Kit to help prevent contaminants from entering the furnace (Fig. 43).

The External Vent Trap Kit accessory may be used as a trap for the combustion air inlet pipe if a large amount of moisture must be removed. The drain line may be connected to the same drain as the furnace condensate and the evaporator coil condensate line **ONLY** if the inlet air trap drain and the evaporator coil drain empty into an open segment of pipe above the drain. The drain line must be connected downstream of the condensate trap float switch (Fig. 11). When using the External Vent Trap Kit, refer to those instructions for proper drain connections.

The tee may also be connected to the intake air pipe on the side of the casing (Fig. 43).

In any configuration, it will be necessary to add the equivalent length of the tee (15 feet/5 M) to the Total Equivalent Vent Length of the venting system.

## NOTICE

**ADDITIONAL INFORMATION FOR POLYPROPYLENE VENTING SYSTEMS**

Polypropylene venting systems include flexible vent pipe. These flexible vent pipes have a different equivalent vent length than straight sections of PVC/ABS DWV vent pipe. Be sure to make the appropriate deductions from the Maximum Equivalent Vent Length (MEVL), or additions to the Total Equivalent Vent Length (TEVL), when applying flexible vent pipes in polypropylene venting systems. See the polypropylene vent system manufacturer's installation instructions for details.

When using metric-sized venting systems, use these equivalencies for obtaining the proper MEVL from the Tables:
Use 2" Vent Tables for 60 mm (o.d.) vent systems
Use 3" Vent Tables for 80 mm (o.d.) vent systems
Use 4" Vent Tables for 100 mm (o.d.) vent systems

The measured length of pipe used in a single or 2-pipe termination is included in the total vent length. Include deductions from the Maximum Equivalent Vent Length (MEVL) contained in the Venting Tables for elbows and flexible vent pipe. Factory accessory concentric vent terminations or pipe lengths and elbows used for "standard" vent terminations do not require a deduction from the Maximum Equivalent Vent Length. See vent termination figures (Table 18). Include a deduction for a Tee when used for Alberta and Saskatchewan terminations.

**NOTE**: Polypropylene venting systems MAY require additional deductions from the MEVL, or additions to the TEVL, for vent terminations and flexible pipe sections. See the polypropylene venting system manufacturer's instructions for details on equivalent lengths of vent terminations and flexible vent pipes, and for calculating total vent lengths.

To calculate the Total Equivalent Vent Length (TEVL) of the venting system:

1. Measure the individual distance from the furnace to the termination for each pipe.
2. Count the number of elbows for each pipe.
3. For each pipe, multiply the number of elbows by the equivalent length for the type of elbow used. Record the equivalent length of all the elbows for each pipe.
4. If a Tee is used on the termination (Alberta and Saskatchewan, when required) record the equivalent length of the Tee used.
5. Calculate Total Equivalent Vent Length by adding the equivalent lengths of the fittings to the lengths of the individual vent and combustion air pipes.
6. When using polypropylene venting systems with flexible vent pipes, perform adjustments for the equivalent length of the flexible vent pipe to the calculated total equivalent venting system length. See the polypropylene vent system manufacturer's instructions for details.
7. Select a diameter of vent pipe (Table 18) and note the Maximum Equivalent Vent Length (MEVL) shown for that application for that specific furnace input size. Compare the Total Equivalent Vent Length (TEVL) to the MEVL:
8. If the Total Equivalent Vent Length is ***shorter*** than the Maximum Equivalent Vent Length for the diameter of pipe chosen, then that diameter of pipe selected may be used.
9. If the Total Vent Length is ***longer*** than the Maximum Equivalent Vent Length for the diameter of pipe chosen, that diameter pipe MAY NOT be used for venting the furnace. Try the next larger diameter pipe.

**NOTE**: If the calculated Total Equivalent Vent Lengths results in different diameter pipes for the vent and combustion air, select the larger diameter for both pipes.

**NOTE**: If the Maximum Vent Length for diameter of the pipe selected is longer than the measured length and the equivalent length of all the fittings and terminations (TEVL), recalculate Total Equivalent Vent Length using the next smaller diameter. If the Maximum Equivalent Vent Length is still longer than the longer TEVL of the vent pipe or combustion air pipe, then that diameter of pipe selected may be used.

When installing vent systems pipe lengths of 10 ft. (3 M) or less, use the smallest allowable pipe diameter. Using a pipe size greater than required for short venting systems may result in loss of efficiency, incomplete combustion, flame disturbance, or flame sense lockout.

For vent systems longer than 10 ft. (3 M), any larger diameter vent pipe (Table 18) **FOR THAT SIZE FURNACE** may be used.

### Combustion Air and Vent Piping Insulation Guidelines

**NOTE**: Use closed cell, neoprene insulation or equivalent.

The vent pipe may pass through unconditioned areas. The amount of exposed pipe allowed (Table 17).

1. Using winter design temperature (used in load calculations), find appropriate temperature for your application and furnace model.
2. Determine the amount of total and exposed vent pipe.
3. Determine required insulation thickness for exposed pipe length(s).
4. When combustion air inlet piping is installed above a suspended ceiling, the pipe **MUST** be insulated with moisture resistant insulation such as Armaflex or other equivalent type of insulation.
5. Insulate combustion air inlet piping when run in warm, humid spaces.

6. Install the insulation per the insulation manufacturer's installation instructions.

**NOTE**: Pipe length (ft. / M) specified for maximum pipe lengths located in unconditioned spaces cannot exceed total allowable pipe length as calculated (Table 18).

## Configure the Furnace

**⚠ WARNING**

**CARBON MONOXIDE POISONING HAZARD**

Failure to follow this warning could result in personal injury or death.

To route the vent pipe and combustion air pipe through the furnace, the manufacturer supplied kit must be used. Failure to properly seal the blower compartment from the furnace vestibule could result in the circulation of carbon monoxide throughout the structure. The vent pipe and combustion air pipe must be a continuous pipe while passing through the blower compartment. Seals supplied in this kit must be installed per the instructions provided. Follow all procedures outlined in these instructions.

### Near Furnace Vent Connections

Offsets in the vertical portion of the vent pipe should be made with 45 deg. elbows instead of 90 deg. elbows. Short horizontal runs of vent pipe are difficult to pitch correctly and may trap water in the vent pipe. Trapped water in the vent pipe may result in nuisance faults.

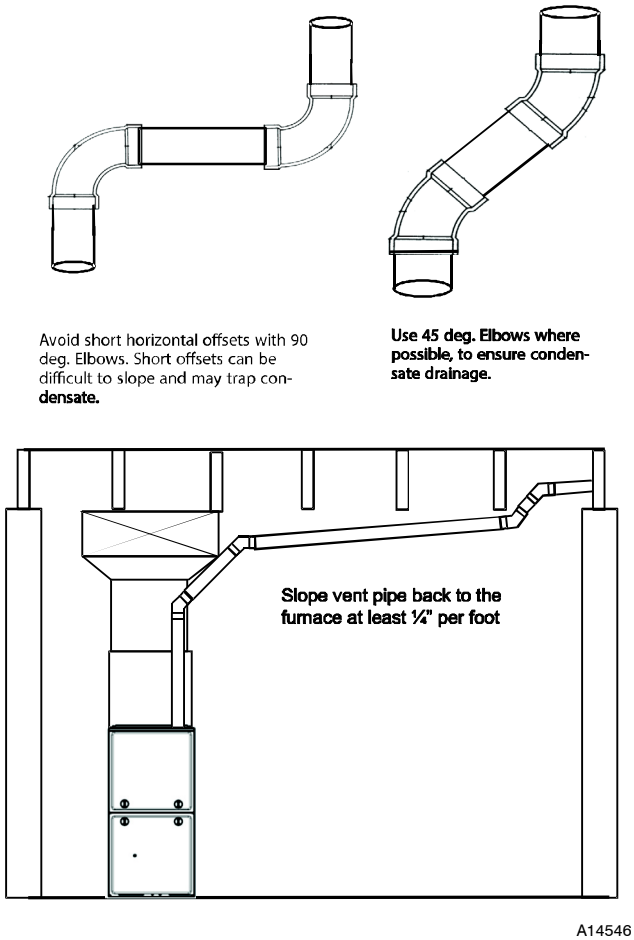


**Fig. 46 - Near Furnace Vent Connections**

### Install the Vent and Combustion Air Pipes

With the furnace installed in the required position, remove the desired knockouts from the casing. It will be necessary to remove one knockout for the vent pipe and the other knockout for the combustion air connection (Fig. 12).

Use a flat blade screwdriver and tap on the knockout on opposite sides, where the knockout meets the casing. Fold the knockout down with duct pliers and work the knockout back and forth until it is removed. Trim any excess metal from the knockout with tin snips.

The vent elbow can be rotated to the required location on the casing if necessary (Fig. 48). To rotate the vent elbow:

1. Loosen the clamp on the inlet of the vent elbow attached to the inducer.
2. Rotate the vent elbow to the required position. There are rounded notches on the vent elbow to align it with the inducer housing for each orientation.
3. Tighten the clamp around the vent elbow. Torque the clamp to 15 lb-in. (Fig. 50 through 52)

### Installing the Vent Pipe Adapter and Combustion Air Pipe Adapter

**⚠ WARNING**

**CARBON MONOXIDE POISONING HAZARD**

Failure to follow this warning could result in personal injury or death.

To route the vent pipe and combustion air pipe through the furnace, the manufacturer supplied kit must be used. Failure to properly seal the blower compartment from the furnace vestibule could result in the circulation of carbon monoxide throughout the structure. The vent pipe and combustion air pipe must be a continuous pipe while passing through the blower compartment. Seals supplied in this kit must be installed per the instructions provided. Follow all procedures outlined in these instructions.

**⚠ WARNING**

**CARBON MONOXIDE POISONING HAZARD**

Failure to follow this warning could result in personal injury or death.

**DO NOT** use cement to join polypropylene venting systems. Follow the polypropylene venting system manufacturer's instructions for installing polypropylene venting systems.

**NOTE**: The rubber coupling that attaches to the vent pipe adapter must be used. The adapter seals the vent pipe to the casing and reduces the strain on the vent elbow attached to the inducer.

1. Apply the gaskets to the vent pipe and combustion air pipe adapters. If supplied, remove and discard round center "slug" from interior of gasket (Fig. 47).

**NOTE**: The vent pipe adapter can be distinguished from the inlet pipe adapter by the absence of an internal pipe-stopping ring. The vent pipe can pass through the vent pipe adapter; it cannot pass through the inlet pipe adapter.

2. Align the screw holes in the plastic vent pipe adapter with the dimples in the casing.
3. Pilot drill the screw holes for the adapter in the casing and attach the vent pipe adapter to the furnace with sheet metal screws
4. Slide the end of the rubber vent coupling with notches in it over the standoffs on the vent pipe adapter.
5. Insert a length of vent pipe through the coupling into the outlet of the vent elbow.

6. Tighten the clamp around the outlet of the vent elbow. Torque the clamp to 15 lb-in.

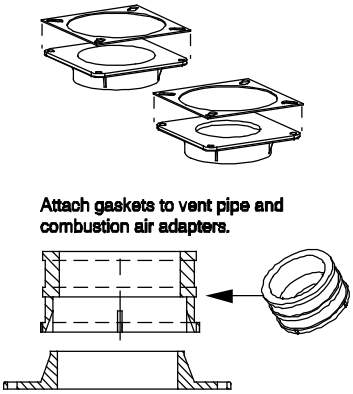


A13074

**Fig. 47 - Vent Coupling and Adapter with Gaskets**

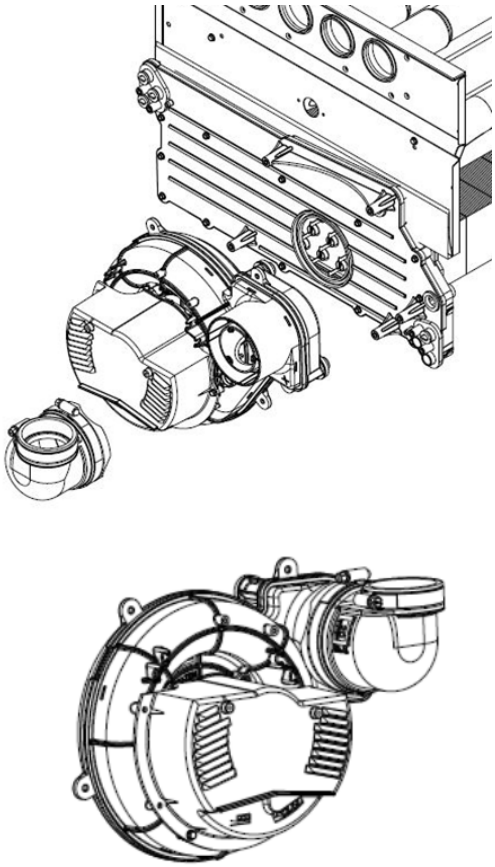

A170006

**Fig. 48 - Inducer Vent Elbow**

# NOTICE

The following instructions are for PVC/ABS DWV vent piping only. DO NOT USE THESE TECHNIQUES FOR POLYPROPYLENE VENT PIPING SYSTEMS. See the polypropylene vent system manufacturer's instructions for installing polypropylene venting systems.

Install the remaining vent and combustion air pipes as shown below. It is recommended that all pipes be cut, prepared, and pre-assembled before permanently cementing any joint.

1. Working from furnace to outside, cut pipe to required length(s).
2. De-burr inside and outside of pipe.
3. Chamfer outside edge of pipe for better distribution of primer and cement.
4. Complete the vent and combustion air pipe installation by connecting the concentric vent or by installing the required termination elbows (Fig. 56 and Fig. 57).
   For Ventilated Combustion Air Termination (Fig. 58).
5. Clean and dry all surfaces to be joined.
6. Check dry fit of pipe and mark insertion depth on pipe.
7. Insert the vent pipe into the vent elbow.
8. Torque clamp on vent elbow 15 lb-in.
9. Torque clamp on vent coupling 15 lb-in.
10. Insert the combustion air pipe into the adapter.
11. Pilot drill a screw hole through the adapter into the combustion air pipe and secure the pipe to the adapter with sheet metal screws. **DO NOT DRILL INTO POLYPROPYLENE VENT PIPES.** Use an optional accessory vent coupling, if needed.
12. Seal around the combustion air pipe with silicone or foil tape. **SILICONE SEALERS MAY NOT BE APPROPRIATE FOR POLYPROPYLENE VENT SYSTEMS. SEE POLYPROPYLENE VENT SYSTEM MANUFACTURER'S INSTRUCTIONS.**
13. After pipes have been cut and pre-assembled, apply generous layer of cement primer to pipe fitting socket and end of pipe to insertion mark. Quickly apply approved cement to end of pipe and fitting socket (over primer). Apply cement in a light, uniform coat on inside of socket to prevent buildup of excess cement. Apply second coat. **DO NOT CEMENT POLYPROPYLENE FITTINGS.**
14. While cement is still wet, twist pipe into socket with 1/4-in. turn. Be sure pipe is fully inserted into fitting socket.
15. Wipe excess cement from joint. A continuous bead of cement will be visible around perimeter of a properly made joint.
16. Handle pipe joints carefully until cement sets.
17. Horizontal portions of the venting system shall be supported to prevent sagging. Space combustion air piping and vent piping hangers (Table 15). Support pipes using perforated metal hanging strap or commercially available hangers or straps designed to support plastic pipe.
18. Slope the vent and combustion air piping downward towards furnace. A minimum slope of at least 1/4-in. (6 mm) per linear ft.(1-in (25 mm) per 4 ft.(1.2 M)) with no sags between hangers is required. See Caution Box below.

# ⚠ CAUTION

**FURNACE RELIABILITY HAZARD**

Failure to follow this caution may result in nuisance short cycling, frozen vent termination, and/or no heat.

Slope the vent and combustion air piping downward towards furnace a minimum of 1/4-in. (6 mm) per linear ft. of pipe.

19. Use appropriate methods to seal openings where combustion air pipe and vent pipe pass through roof or sidewall.

**Table 15 – Hanger Spacing**

| Diameter | Material | | | | |
|---|---|---|---|---|---|
| | PVC Sch 40 | SDR 21 & 26 | ABS | CPVC | Polypropylene |
| 1 1/2–in. | 3–ft. | 2 1/2–ft. | 3–ft. | 3–ft. | 3.25–ft. |
| 38–mm | 914–mm | 762–mm | 914–mm | 914–mm | 1000 mm |
| 2–in. | 3–ft. | 3–ft. | 3–ft. | 3–ft. | 3.25–ft. |
| 51–mm | 914–mm | 914–mm | 914–mm | 914–mm | 1000 mm |
| 2 1/2–in. | 3 1/2–ft. | 3–ft. | 3 1/2–ft. | 3 1/2–ft. | 3.25–ft. |
| 64–mm | 1067–mm | 914–mm | 1067–mm | 1067–mm | 1000 mm |
| 3–in. | 3 1/2–ft. | 3–ft. | 3 1/2–ft. | 3 1/2–ft. | 3.25–ft. |
| 76–mm | 1067–mm | 914–mm | 1067–mm | 1067–mm | 1000 mm |
| 4–in. | 4–ft. | 3 1/2–ft. | 4–ft. | 4–ft. | 3.25–ft. |

## ⚠ WARNING

**CARBON MONOXIDE POISONING HAZARD**

Failure to follow this warning could result in personal injury or death.

**DO NOT** use cement to join polypropylene venting systems. Follow the polypropylene venting system manufacturer's instructions for installing polypropylene venting systems.

### Optional Installation of the Vent Pipe

**NOTE: DO NOT USE THIS TECHNIQUE FOR POLYPROPYLENE VENTING SYSTEMS.**

This option provides a disconnect point for the vent pipe. The vent pipe must be cemented to the plastic vent pipe adapter to maintain a sealed vestibule (Fig. 49).

1. Insert a length of vent pipe through the casing into the outlet of the vent elbow.
2. Slide the plastic vent pipe adapter over the length of the vent pipe down to the furnace casing. Mark the pipe where it is flush with the outlet of the adapter.
3. Remove the pipe from the furnace and the adapter and cut off any excess pipe.
4. Clean and prime the end of the pipe that is flush with the vent adapter with a primer that is appropriate for the type of pipe being used.
5. Re-insert the pipe through the casing into the vent elbow.
6. Tighten the clamp around the outlet of the vent elbow. Torque the clamp to 15 lb-in.
7. Apply cement to the end of the pipe and to the inside of the plastic vent adapter.
8. Slide the adapter over the vent pipe and align the screw holes in the adapter with the dimples in the furnace casing.
9. Pilot drill 1/8-in. screw holes for the adapter in the casing and secure the adapter to the furnace with sheet metal screws.
10. Loosen the clamps on the rubber vent coupling.
11. Slide the end of the coupling with notches in it over the standoffs in the vent pipe adapter.
12. Tighten the clamp of the coupling over the vent pipe adapter. Torque the lower clamp around the vent pipe adapter to 15 lb-in.
13. Pilot drill a 1/8-in. hole in the combustion air pipe adapter.
14. Complete the vent and combustion air pipe as shown in "Install the Vent and Combustion Air Pipe."

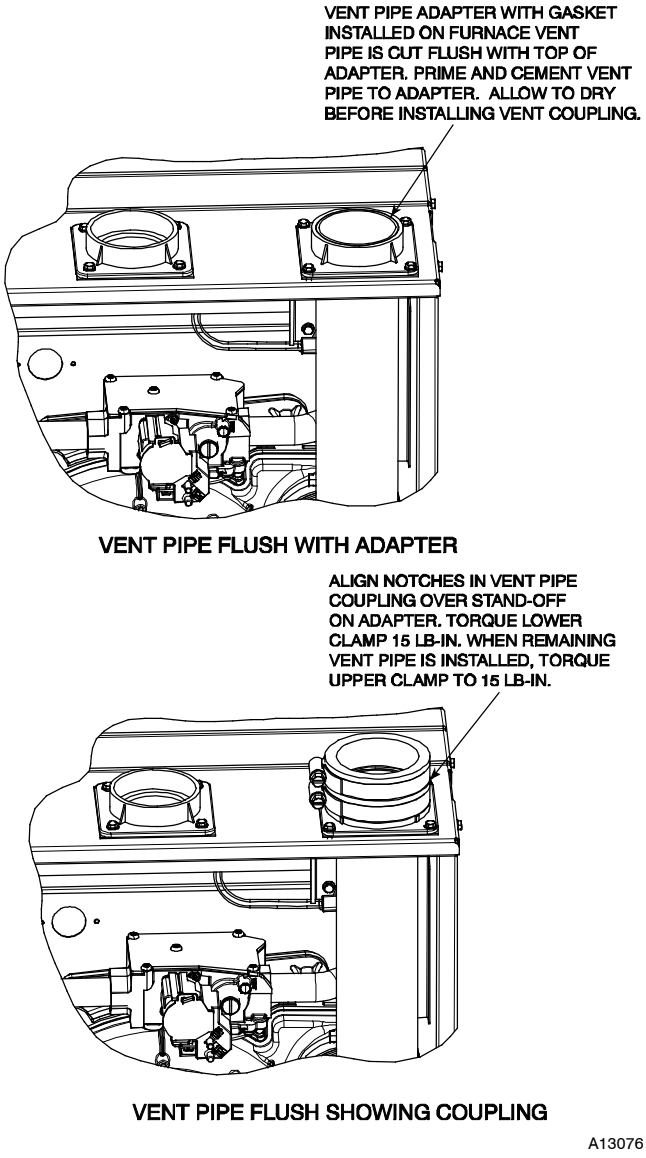


**Fig. 49 - Optional Vent Pipe Flush with Adaptor**

## NOTICE

**FOR POLYPROPYLENE VENTING SYSTEMS**

When using polypropylene venting systems, all venting materials used, including the vent terminations, must be from the same manufacturer.

## Installing the Vent Termination

### Roof Terminations

A roof termination of any type will require a 4-in. (102 mm) flashing for a 2 in. (50 mm ND) concentric vent or a 5-in. diameter (127 mm) flashing for a 3-in. (80 mm ND) concentric vent kit. For two-pipe or single pipe vent systems, a flashing for each pipe of the required diameter will be necessary.

It is recommended that the flashing be installed by a roofer or competent professional prior to installing the concentric vent. The terminations can be installed on a flat or pitched roof.

**Concentric Vent**

Single or multiple concentric vent must be installed (Fig. 56). Maintain the required separation distance between vents or pairs of vents (Fig. 56) and all clearance (Fig. 54).

**NOTE**: Follow the instructions of the vent terminal manufacturer. These instructions are provided as a reference, only.

Cut one 4-in. (102 mm) diameter hole for 2-in. (50 mm ND) kit, or one 5-in. (127 mm) diameter hole for 3-in. (80 mm ND) kit in the desired location.

Loosely assemble concentric vent/combustion air termination components together using instructions in kit.

Slide assembled kit with rain shield **REMOVED** through hole in wall or roof flashing.

**NOTE**: Do not allow insulation or other materials to accumulate inside of pipe assembly when installing it through hole.

Disassemble loose pipe fittings. Clean and cement using same procedures as used for system piping. **DO NOT CEMENT POLYPROPYLENE FITTINGS.**

**Two-Pipe and Single-Pipe Terminations**

Single and two pipe vent must be installed (Fig. 56 and Fig. 57). Maintain the required separation distance between vents or pairs of vents (Fig. 56 and Fig. 57) and all clearances (Fig. 54 and Fig. 55).

**NOTICE**

**RECOMMENDED SUPPORT FOR VENT TERMINATIONS**

It is recommended that rooftop vent terminations in excess of 36 inches (1 M) in vertical length be supported by **EITHER** the Direct Vent Termination Kit (Table 14) or by field-supplied brackets or supports fastened to the structure.

Cut the required number of holes in the roof or sidewall for vent and (when used) combustion air pipes. Sidewall holes for two-pipe vent terminations should be side-by-side, allowing space between the pipes for the elbows to fit on the pipes.

Holes in the roof for direct-vent two-pipe terminations should be spaced no more than 18 in. (457 mm) apart to help avoid vent gas recirculation into combustion air intake.

Termination elbows will be installed after the vent and (if used) combustion air pipe is installed.

### Sidewall Terminations

**Concentric Vent**

**NOTE**: Follow the instructions of the vent terminal manufacturer. These instructions are provided as a reference only.

Determine an appropriate location for termination kit using the guidelines provided in section "Locating The Vent Termination" in this instruction.

1. Cut one 4-in. diameter hole for 2-in. kit, or one 5-in. diameter hole for 3-in. kit.
2. Loosely assemble concentric vent/combustion air termination components together using instructions in kit.
3. Slide assembled kit with rain shield REMOVED through hole.

**NOTE**: Do not allow insulation or other materials to accumulate inside of pipe assembly when installing it through hole.

4. Locate assembly through sidewall with rain shield positioned no more than 1-in. (25 mm) from wall (Fig. 56).
5. Disassemble loose pipe fittings. Clean and cement using same procedures as used for system piping. **DO NOT CEMENT POLYPROPYLENE FITTINGS.**

### 2-Pipe and 1-Pipe Vent Termination

**NOTE**: Follow the instructions of the vent terminal manufacturer. These instructions are provided as a reference, only.

**NOTICE**

**RECOMMENDED SUPPORT FOR VENT TERMINATIONS**

It is recommended that sidewall vent terminations in excess of 24 inches (0.6 M) in vertical length be supported by **EITHER** the Direct Vent Termination Kit (Table 14) or by field-supplied brackets or supports fastened to the structure.

Determine an appropriate location for termination kit using the guidelines provided in section "Locating The Vent Termination" in this instruction.

1. Cut two holes, one for each pipe, of appropriate size for pipe size being used.
2. Loosely install elbow in bracket (if used) and place assembly on combustion-air pipe.
3. Install bracket (Fig. 56).

**NOTE**: For applications using vent pipe option indicated by dashed lines (Fig. 56 and Fig. 57), rotate vent elbow 90° from position.

4. Disassemble loose pipe fittings. Clean and cement using same procedures as used for system piping. **DO NOT CEMENT POLYPROPYLENE FITTINGS.**

### (Direct Vent / 2-Pipe System ONLY)

When two or more furnaces are vented near each other, two vent terminations may be installed (Fig. 56), but next vent termination, or pair of vent terminations, must be at least 36 in. (914 mm) away from the first two terminations. It is important that vent terminations be made (Fig. 56) to avoid recirculation of vent gases.

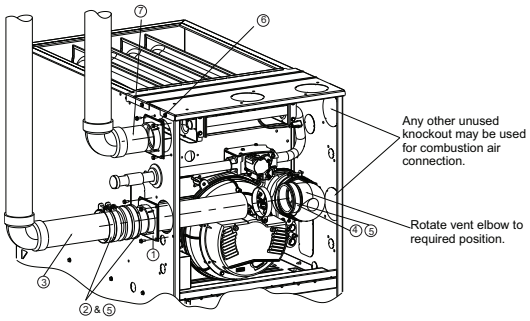


Representative drawing only, some models may vary.

UPFLOW LEFT CONFIGURATION

A11309A

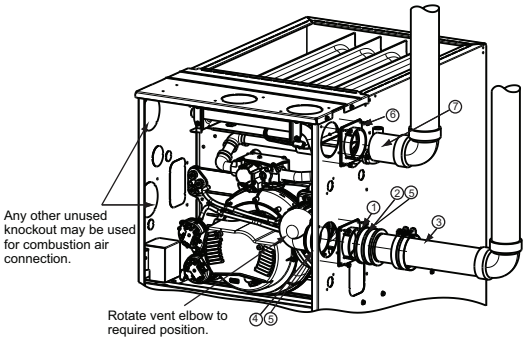


Representative drawing only, some models may vary.

UPFLOW RIGHT CONFIGURATION

A11308A

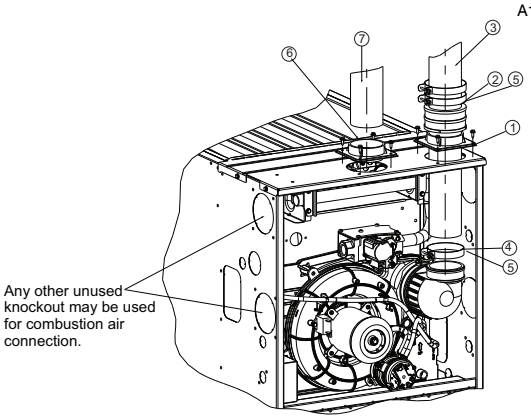


Representative drawing only, some models may vary.

UPFLOW VERTICAL VENT

A11310A

**Fig. 50 - Upflow Configurations (Appearance may vary)**
**See "Notes for Venting Options"**

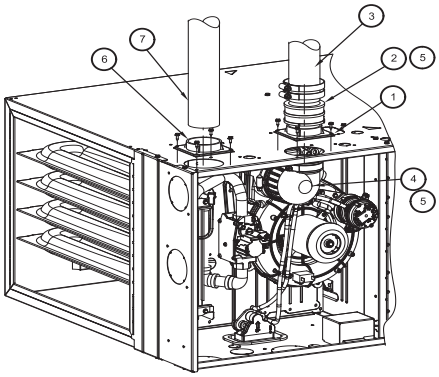

Representative drawing only, some models may vary.

HORIZONTAL LEFT – VERTICAL VENT CONFIGURATION

A11327A

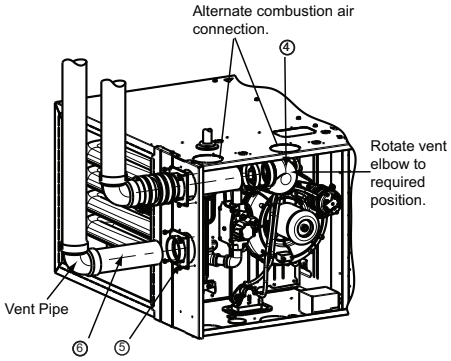


Representative drawing only, some models may vary.

HORIZONAL LEFT – LEFT VENT CONFIGURATION

A11328A

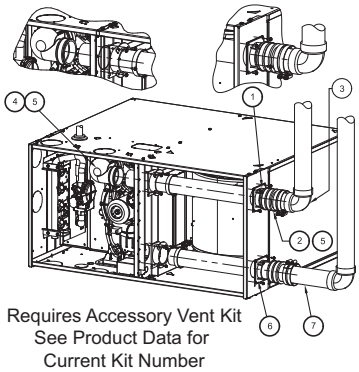


Representative drawing only, some models may vary.

HORIZONTAL LEFT – RIGHT VENT CONFIGURATION

A11329A

**Fig. 51 - Horizontal Left (Appearance may vary)**
**See "Notes for Venting Options"**

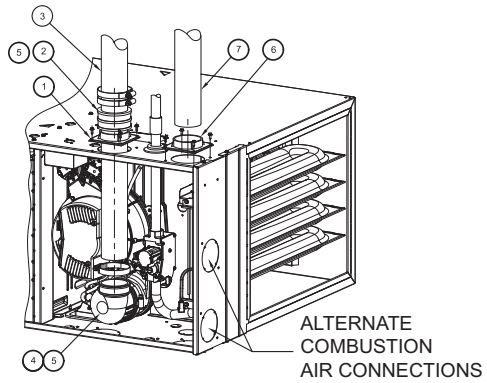


Representative drawing only, some models may vary.

HORIZONTAL RIGHT – VERTICAL VENT CONFIGURATION

A11337

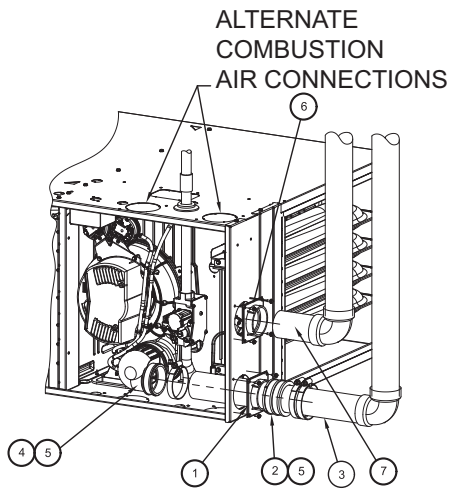


Representative drawing only, some models may vary.

HORIZONTAL RIGHT – RIGHT VENT CONFIGURATION

A11335

**Fig. 52 - Horizontal Right (Appearance may vary)**
**See "Notes for Venting Options"**

## NOTES FOR VENTING OPTIONS

1. Attach vent pipe adapter with gasket to furnace casing.
2. Align notches in rubber coupling over standoffs on adapter. Slide clamps over the coupling.
3. Slide vent pipe through adapter and coupling into vent elbow.
4. Insert vent pipe into vent elbow.
5. Torque all clamps 15 lb.-in.
6. Attach combustion air pipe adapter with gasket to furnace.
7. Attach combustion air pipe to adapter with silicone. Pilot drill a 1/8-in. hole in adapter and secure with a #7 x 1/2-in. sheet metal screw.

**Table 16 – Approved Combustion-Air and Vent Pipe, Fitting and Cement Materials (U.S.A. Installations)**

| MATERIALS | | | | | | |
|---|---|---|---|---|---|---|
| USA | 1. All pipe, fittings, primers*, and solvents* must conform to American National Standards Institute (ANSI) standards and American Society for Testing and Materials (ASTM) standards or ULC S636 where required by code.<br>2. See Table below for approved materials for use in the U.S.A.<br>3. ULC S636 vent systems must be composed of pipe, fittings, cements, and primers from the same supplier.<br>4. Factory accessory concentric vent kits are ULC S636 listed. | | | | | |
| Material | Description | Type | ASTM or ULC Specification | | | |
| | | | Pipe | | Solvents/Primers** | Cements |
| PVC | Pressure Pipe | Schedule 40 | D1785 | D2466 or D2665 | F656 | D2564 |
| | DWV | Schedule 40 | D1785/D2665 | | | |
| | Cellular Core | Schedule 40 | F891 | | | |
| | SDR 26 | N/A | D2241 | | | |
| | SDR 21 | N/A | D2241 | | | |
| | IPEX | Schedule 40 | ULC S636 | ULC S636 | ULC S636 | ULC S636 |
| | Royal Pipe | Schedule 40 | ULC S636 | ULC S636 | ULC S636 | ULC S636 |
| ABS | ABS | Schedule 40 | D1527 | D2468 | Clear Cleaner For ABS† | D2235 |
| | DWV-IPS Sizes | Schedule 40 | D2661 | D2661 | | |
| | Cellular Core DWV-IPS Sizes | Schedule 40 | F628 | | | |
| CPVC | Pressure Pipe | Schedule 40 | F441 | F438 | F656 | F493 |
| | SDR | N/A | F442 | N/A | | |
| | IPEX | Schedule 40 | ULC S636 | ULC S636 | ULC S636 | ULC S636 |
| | Royal Pipe | Schedule 40 | ULC S636 | ULC S636 | ULC S636 | ULC S636 |
| *PVC and ABS pipe may use either DWV or pressure rated fittings. | | | | | | |
| **Colored or tinted solvents or primers must be used where required by code in the USA | | | | | | |
| †ABS plastic does not require a primer before solvent cementing. A cleaner for ABS is recommended to remove any surface residue. ABS cleaners are not subject to ASTM standards. | | | | | | |
| Polypropylene | Approved Manufacturer | | | | Solvents Primers | Cements |
| Poly Pro® | M & G Dura Vent | | | | Not Permitted | Not Permitted |
| NOTE: Polypropylene vent systems are UL- 1738 and ULC S636 listed and assembled using mechanical fastening systems supplied by the vent manufacturer. | | | | | | |

## Table 17 – Maximum Allowable Exposed Vent Length in Unconditioned Space - Ft.

| Unit Size | | 60,000 BTUH | | | | | | | | | | | |
|---|---|---|---|---|---|---|---|---|---|---|---|---|---|
| | | Uninsulated | | | | 3/8-in. Insulation | | | | 1/2-in. Insulation | | | |
| | Pipe Dia. in. | 1 ½ | 2 | 2 ½ | 3 | 1 ½ | 2 | 2 ½ | 3 | 1 ½ | 2 | 2 ½ | 3 |
| Winter Design Temp °F | 20 | 20 | 30 | 30 | 25 | 20 | 75 | 65 | 60 | 20 | 85 | 75 | 65 |
| | 0 | 15 | 15 | 10 | 10 | 20 | 40 | 30 | 25 | 20 | 45 | 40 | 30 |
| | -20 | 10 | 5 | | | 20 | 25 | 20 | 15 | 20 | 30 | 25 | 20 |
| | -40 | 5 | | | | 20 | 15 | 15 | 10 | 20 | 20 | 15 | 10 |

| Unit Size | | 80,000 BTUH | | | | | | | | | | | | | | |
|---|---|---|---|---|---|---|---|---|---|---|---|---|---|---|---|---|
| | | Uninsulated | | | | | 3/8-in. Insulation | | | | | 1/2-in. Insulation | | | | |
| | Pipe Dia. in. | 1 ½ | 2 | 2 ½ | 3 | 4 | 1 ½ | 2 | 2 ½ | 3 | 4 | 1 ½ | 2 | 2 ½ | 3 | 4 |
| Winter Design Temp °F | 20 | 15 | 40 | 40 | 35 | 30 | 15 | 50 | 90 | 75 | 65 | 15 | 50 | 70 | 70 | 70 |
| | 0 | 15 | 20 | 15 | 10 | 5 | 15 | 50 | 45 | 35 | 30 | 15 | 50 | 50 | 40 | 35 |
| | -20 | 15 | 10 | 5 | | | 15 | 35 | 30 | 20 | 15 | 15 | 40 | 30 | 25 | 15 |
| | -40 | 10 | 5 | | | | 15 | 25 | 20 | 15 | 5 | 15 | 30 | 25 | 20 | 10 |

| Unit Size | | 100,000 BTUH | | | | | | | | | | | |
|---|---|---|---|---|---|---|---|---|---|---|---|---|---|
| | | Uninsulated | | | | 3/8-in. Insulation | | | | 1/2-in. Insulation | | | |
| | Pipe Dia. in. | 2 | 2 ½ | 3 | 4 | 2 | 2 ½ | 3 | 4 | 2 | 2 ½ | 3 | 4 |
| Winter Design Temp °F | 20 | 20 | 50 | 40 | 35 | 20 | 80 | 95 | 80 | 20 | 80 | 105 | 90 |
| | 0 | 20 | 20 | 15 | 10 | 20 | 55 | 45 | 35 | 20 | 65 | 55 | 45 |
| | -20 | 15 | 10 | 5 | | 20 | 35 | 30 | 20 | 20 | 45 | 35 | 25 |
| | -40 | 10 | 5 | | | 20 | 25 | 20 | 10 | 20 | 30 | 25 | 15 |

## Table 18 – Maximum Equivalent Vent Length - Ft.

***NOTE: Maximum Equivalent Vent Length (MEVL) includes standard and concentric vent termination and does NOT include elbows. Use Table 19 - Deductions from Maximum Equivalent Vent Length to determine allowable vent length for each application.***

| Unit Size | | 60,000 | | | | 80,000 | | | | | 100,000 | | | |
|---|---|---|---|---|---|---|---|---|---|---|---|---|---|---|
| Altitude (feet) | Pipe Dia. (in) | 1 ½ | 2 | 2 ½ | 3 | 1 ½ | 2 | 2 ½ | 3 | 4 | 2 | 2 ½ | 3 | 4 |
| | 0 – 2000 | 20 | 100 | 175 | 200 | 15 | 55 | 130 | 175 | 200 | 20 | 80 | 175 | 200 |
| | 2001 – 3000 | | 95 | 165 | 185 | 10 | 49 | 125 | 165 | 185 | 15 | 75 | 165 | 185 |
| | 3001 – 4000 | 16 | 90 | 155 | 175 | | | 115 | 155 | 175 | | | 155 | 175 |
| | 4001 – 4500 | 15 | 85 | 150 | 170 | | 44 | 110 | 150 | 165 | 10 | 70 | | 170 |
| | 4501 – 5000 | | 80 | 145 | 165 | | 44 | 110 | 145 | 160 | | 65 | 150 | 165 |
| | 5001 – 5400 | | 75 | 140 | 155 | | 41 | 100 | 135 | 150 | | | 140 | 155 |

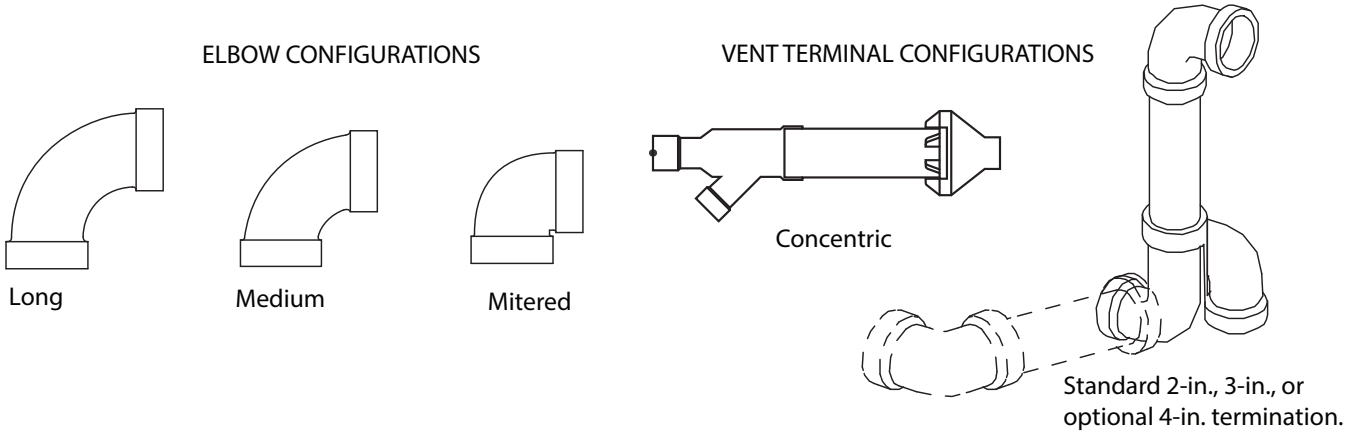


A13110

## Table 19 – Deductions from Maximum Equivalent Vent Length - Ft. (M)

| Pipe Diameter (in): | 1-1/2 | | 2 | | 2-1/2 | | 3 | | 4 | |
|---|---|---|---|---|---|---|---|---|---|---|
| **Mitered 90° Elbow** | 8 | (2.4) | 8 | (2.4) | 8 | (2.4) | 8 | (2.4) | 8 | (2.4) |
| **Medium Radius 90° Elbow** | 5 | (1.5) | 5 | (1.5) | 5 | (1.5) | 5 | (1.5) | 5 | (1.5) |
| **Long Radius 90° Elbow** | 3 | (0.9) | 3 | (0.9) | 3 | (0.9) | 3 | (0.9) | 3 | (0.9) |
| **Mitered 45° Elbow** | 4 | (1.2) | 4 | (1.2) | 4 | (1.2) | 4 | (1.2) | 4 | (1.2) |
| **Medium Radius 45° Elbow** | 2.5 | (0.8) | 2.5 | (0.8) | 2.5 | (0.8) | 2.5 | (0.8) | 2.5 | (0.8) |
| **Long Radius 45° Elbow** | 1.5 | (0.5) | 1.5 | (0.5) | 1.5 | (0.5) | 1.5 | (0.5) | 1.5 | (0.5) |
| **Tee** | 16 | (4.9) | 16 | (4.9) | 16 | (4.9) | 16 | (4.9) | 16 | (4.9) |
| **Concentric Vent Termination** | NA | | 0 | (0.0) | NA | | 0 | (0.0) | NA | |
| **Standard Vent Termination** | 0 | (0.0) | 0 | (0.0) | 0 | (0.0) | 0 | (0.0) | 0 | (0.0) |

**NOTES**:
1. Use only the smallest diameter pipe possible for venting. Over–sizing may cause flame disturbance or excessive vent terminal icing or freeze–up.
2. NA – Not allowed. Pressure transducer will not close, or flame disturbance may result.
3. Vent sizing for Canadian installations over 4500 ft. (1370 M) above sea level are subject to acceptance by the local authorities having jurisdiction.
4. Size both the combustion air and vent pipe independently, then use the larger size for both pipes.
5. Assume the two 45° elbows equal one 90° elbow. Wide radius elbows are desirable and may be required in some cases.
6. Elbow and pipe sections within the furnace casing and at the vent termination should not be included in vent length or elbow count.
7. The minimum pipe length is 5 ft. (2 M) linear feet (meters) for all applications.
8. Use 3–in. (76 mm) diameter vent termination kit for installations requiring 4–in. (102 mm) diameter pipe.

## Venting System Length Calculations

The Total Equivalent Vent Length (TEVL) for **EACH** combustion air or vent pipe equals the length of the venting system, plus the equivalent length of elbows used in the venting system (Table 19).

Standard vent terminations or factory accessory concentric vent terminations count for zero deduction.

See vent system manufacturer's data for equivalent lengths of flexible vent pipe or other termination systems. **DO NOT ASSUME** that one foot of flexible vent pipe equals one foot of straight PVC/ABS DWV vent pipe.

Compare the Total Equivalent Vent Length to the Maximum Equivalent Vent Lengths (Table 18).

## Example 1

A direct-vent 60,000 BTUH furnace installed at 2100 ft. (640M). Venting system includes **FOR EACH PIPE:**
70 feet (22 M) of vent pipe, 65 feet (20 M) of combustion air inlet pipe, (3) 90º long-radius elbows, (2) 45º long-radius elbows, and a factory accessory concentric vent kit.
Can this application use 2" (50 mm ND) PVC/ABS DWV vent piping?

| | | | | | | |
|---|---|---|---|---|---|---|
| Measure the required linear length of air inlet and vent pipe; insert the longest of the two here | | | | | 70 ft. (22 M) | Use length of the longer of the vent or air inlet piping system |
| Add equiv length of (3) 90º long-radius elbows (use the highest number of elbows for either the vent or inlet pipe) | 3 | x | 3 ft. (0.9 M) | = | 9 ft. (2.7 M) | From Table 19 |
| Add equiv length of (2) 45º long-radius elbows (use the highest number of elbows for either the vent or inlet pipe) | 2 | x | 1.5 ft. (0.5 M) | = | 3 ft. (0.9 M) | From Table 19 |
| Add equiv length of factory concentric vent term | | | | | 0 ft. | From Table 19 |
| Add correction for flexible vent pipe, if any | | | | | 0 ft. | From Vent Manufacturer's instructions; zero for PVC/ABS DWV |
| Total Equivalent Vent Length (TEVL) | | | | | 82 ft. (25 M) | Add all of the above lines |
| | | | | | | |
| Maximum Equivalent Vent Length (MEVL) | | | | | 95 ft. (29 M) | For 2" pipe from Table 18 |
| **Is TEVL less than MEVL?** | | | | | **YES** | **Therefore, 2" pipe MAY be used** |

## Example 2

A direct-vent 60,000 BTUH furnace installed at 2100 ft. (640M). Venting system includes **FOR EACH PIPE:**
100 feet (30 M) of vent pipe, 95 feet (29 M) of combustion air inlet pipe, (3) 90º long-radius elbows, and a polypropylene concentric vent kit. Also includes 20 feet (6.1 M) of flexible polypropylene vent pipe, included within the 100 feet (30 M) of vent pipe.
VERIFY FROM POLYPROPYLENE VENT MANUFACTURER'S INSTRUCTIONS for the multiplier correction for flexible vent pipe.
Can this application use 60mm o.d. (2") polypropylene vent piping? If not, what size piping can be used?

| | | | | | | |
|---|---|---|---|---|---|---|
| Measure the required linear length of **RIGID** air inlet and vent pipe; insert the longest of the two here: 100 ft. Of rigid pipe – 20 ft. Of flexible pipe | | | | = | 80 ft. (24 M) | Use length of the longer of the vent or air inlet piping system |
| Add equiv length of (3) 90º long-radius elbows (use the highest number of elbows for either the vent or inlet pipe) | 3 | x | 5 ft. (1.5 M) | = | 15 ft. (4.6 M) | Example from polypropylene vent manufacturer's instructions, Verify from vent manufacturer's instructions. |
| Add equiv length of 45º long-radius elbows (use the highest number of elbows for either the vent or inlet pipe) | 0 | x | | = | 0 ft. (0 M) | |
| Add equiv length of factory concentric vent term | 9 | x | 3.3 ft (0.9 M) | = | 30 ft. (9 M) | |
| Add correction for flexible vent pipe, if any | 2* | x | 20 ft. (6.1 M) | = | 40 ft. (12.2 M) | |
| * VERIFY FROM VENT MANUFACTURER'S INSTRUCTIONS; For example only, assume 1 meter of flexible 60mm (2") or 80mm (3") polypropylene pipe equals 2.0 meters (6.5 ft.) of PVC/ABS pipe. | | | | | | |
| Total Equivalent Vent Length (TEVL) | | | | | 165 ft. (50 M) | Add all of the above lines |
| | | | | | | |
| Maximum Equivalent Vent Length (MEVL) | | | | | 95 ft. (29 M) | For 2" pipe from Table 18 |
| **Is TEVL less than MEVL?** | | | | | **NO** | **Therefore, 60mm (2") pipe may NOT be used; try 80mm (3")** |
| | | | | | | |
| Maximum Equivalent Vent Length (MEVL) | | | | | 185 ft. (57 M) | For 3" pipe from Table 18 |
| **Is TEVL less than MEVL?** | | | | | **YES** | **Therefore, 80mm (3") pipe MAY be used** |

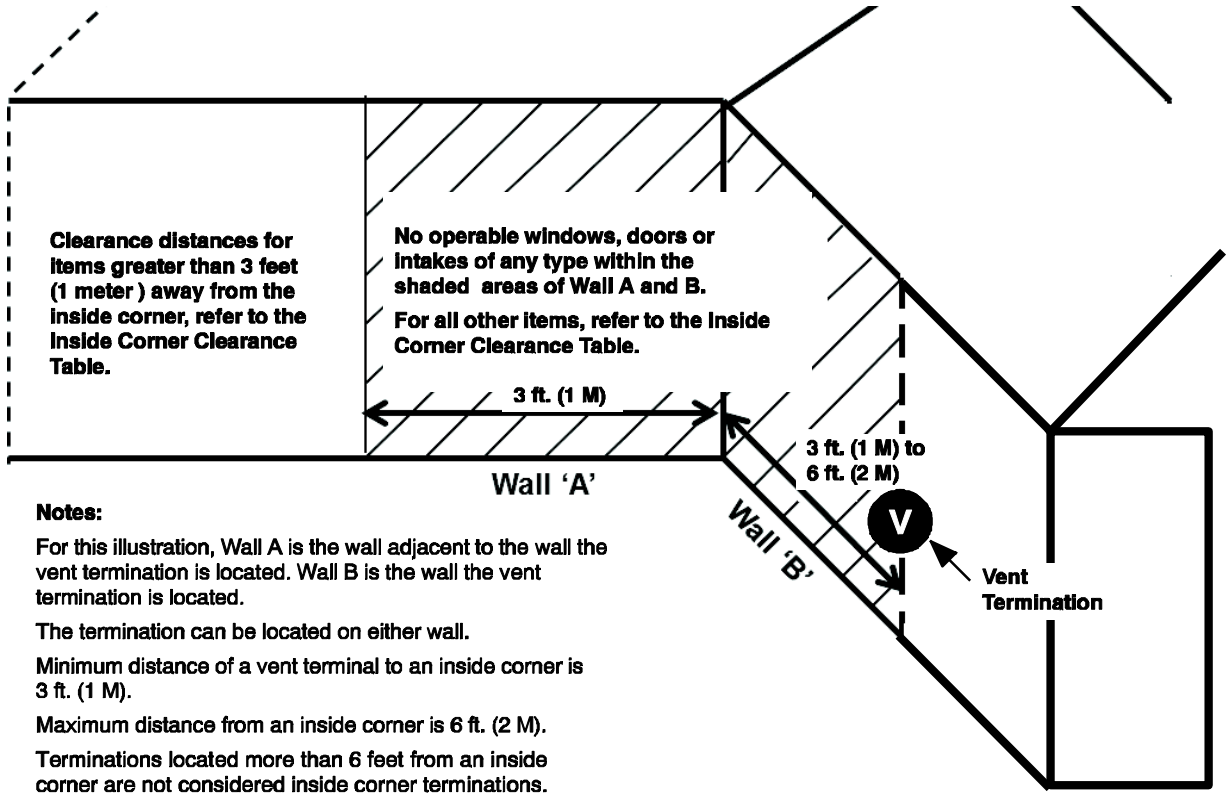


A190032

**Fig. 53 - Inside Corner Termination**

## Inside Corner Terminations

Inside corner vent terminations are permitted provided that:

- Only two exterior walls come together to form an angle of 90 degrees to 135 degrees. There are no other exterior walls attached to either wall to form an alcove.
- The clearance distances apply when the vent is at least 3 feet (1 meter) from, but not more than 6 feet (2 meters) away from an inside corner.
- For vent terminations located more than 6 feet (2 meters) from an inside corner, refer to the appropriate Direct Vent Clearance Table for all two pipe terminations or Non–Direct Vent Clearance Table for all single pipe terminations.
- The clearance distances to items between the vent termination and the outside corner, refer to the appropriate Direct Vent Clearance Table for all two pipe terminations or Non–Direct Vent Clearance Table for all single pipe terminations.

| | |
|---|---|
| **For clearance distances when vent termination is located more than 6 ft. (2 M) away from an inside corner, refer to the appropriate Direct Vent or Non–Direct Vent Clearance Table.** | |
| **Clearance description when termination is at least 3 ft. (1 M) away and not more than 6 ft. (2 M) away from an inside corner.** | |
| Clearance above grade, veranda, porch, deck, balcony or anticipated snow level | 12–in. (305 mm) |
| Clearance to a permanently closed window on either Wall A or Wall B | 12–in. (305 mm) |
| Vertical clearance to a soffitt located above the vent termination within a horizontal distance of 2 ft. (61 cm) from the centerline of the vent termination | 6 ft. (2 M) |
| Clearance to a ventilation exhaust (including HRV/ERV) on either Wall A or Wall B | 12–in. (305 mm) |
| Clearance above paved sidewalk or paved driveway located on public property | 7 ft. (2.1 M) |
| Clearance under a veranda, porch, deck, or balcony | N.P.* |
| | |
| **No operable windows, doors or intakes of any type are permitted on Wall B between the vent termination and the inside corner when the vent termination is at least 3 ft. (1 M) away and not more than 6 ft. (2 M) away from an inside corner.** | |
| **The following items on Wall A must be located at least 3 ft. (1 M) away from the inside corner when a vent termination is located on Wall B and the vent termination is at least 3 ft. (1 M) away or not more than 6 ft. (2 M) away from an inside corner.** | |
| A window or door that may be opened | |
| The centerline extended above electrical meter or gas service regulator assembly | |
| A service regulator vent outlet | |
| The centerline of a dryer or water heater vent, or other appliance's vent intake | |
| A non–mechanical air supply inlet | |
| | |
| **Clearance distances shown for Wall A are measured horizontally from the exit of the termination on Wall B to the closest edge of the item shown below.** | |
| Clearance to a mechanical air supply (including HRV/ERV) inlet unless termination is 3 ft. (1 M) above the horizontal line of the intake | 10 ft. (3 M) |
| | |
| **For clearance distances from a vent termination to the outside corner of the wall, refer to the appropriate Direct Vent or Non–Direct Vent Clearance Table** | |
| *N.P. = Not Permitted<br>*N/A = Not Applicable | |

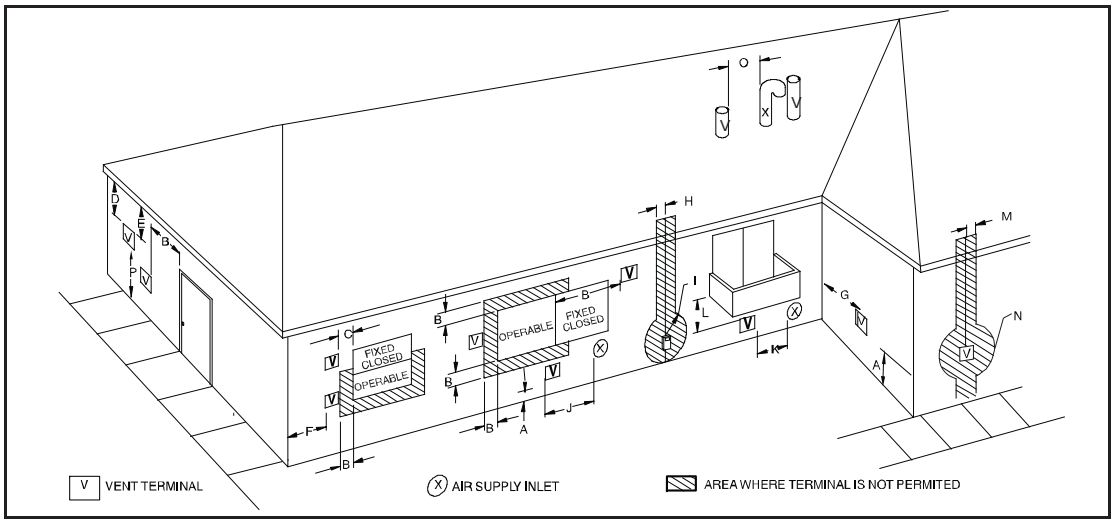


A12326

**Fig. 54 - Direct Vent Termination Clearance**

**NOTE**: The following is based upon National codes for gas appliances and is provided as a reference. Refer to local codes which may supersede these standards and/or recommendations.

| Item | Clearance Description | Canadian Installations (1) (per CAN/CSA B149.1) | U.S. Installations (2) (per ANSI Z223.1/NFPA 54) |
|---|---|---|---|
| A | Clearance above grade, veranda, porch, deck, balcony or anticipated snow level | 12 in. (305 mm)<br>18 in. (457 mm) above roof surface. | 12 in. (305 mm) |
| B | Clearance to a window or door that may be opened | 12 in. (305 mm) for appliances >10,000 Btuh (3 kW) and </=100,000 Btuh ( 30 kW),<br>36 in. (914 mm) for appliances >100,000 Btuh (30 kW) | 9 in. (229 mm) for appliances >10,000 Btuh (3 kW) and </= 50,000 Btuh ( 15 kW),<br>12 in. (305 mm) for appliances >50,000 Btuh (15kW) |
| C | Clearance to a permanently closed window | For clearances not specified in ANSI Z223.1/NFPA 54 or CAN/CSA B149.1, clearances shall be in accordance with local installation codes and the requirements of the gas supplier and the manufacturer's installation instructions.<br><br>Manufacturer's Recommendation: See Notes 3-8. | |
| D | Vertical clearance to a ventilated soffit located above the terminal within a horizontal distance of 2 feet (61 cm) from the centerline of the terminal | | |
| E | Clearance to an unventilated soffit | | |
| F | Clearance to an outside corner | | |
| G | Clearance to an inside corner | | |
| H | Clearance to each side of the centerline extended above electrical meter or gas service regulator assembly | 3 ft. (.9 M) within 15 ft. (4.6 M) above the meter/regulator assembly. | 3 ft. (.9 M) within 15 ft. (4.6 M) above the meter/regulator assembly. |
| I | Clearance to service regulator vent outlet | 3ft. (.9 M) | See Note 4. |
| J | Clearance to non—mechanical air supply inlet to building or the combustion air inlet to any other appliance | 12 in. (305 mm) for appliances >10,000 Btuh(3 kW) and </= 100,000 Btuh ( 30 kW),<br>36 in. (914 mm) for appliances >100,000 Btuh (30 kW) | 9 in. (9 mm) for appliances >10,000 Btuh (3 kW) and </= 50,000 Btuh (15 kW),<br>12 in.(305 mm) for appliances >50,000 Btuh (15kW) |
| K | Clearance to a mechanical air supply inlet | 6 ft. (1.8 M) | 3ft. (.9 M) above if within 10 ft. (3 M) horizontally |
| L | Clearance under a veranda, porch, deck, or balcony | 12 in. (305 mm).<br>Permitted only if veranda, porch, deck, or balcony is fully open on a minimum of two sides beneath the floor. | See Note 4.<br><br>Manufacturer's Recommendation: See Notes 3-8. |
| M | Clearance to each side of the centerline extended above or below vent terminal of the furnace to a dryer or water heater vent, or other appliance's direct vent intake or exhaust | 12 in. (305 mm) | 12 in. (305 mm) |
| N | Furnace combustion air intake clearance to a water heater vent, dryer vent or other types of appliance exhausts. | 3 ft. (.9 M) | 3 ft. (.9 M) |
| 0 | Clearance from a plumbing vent stack | 3 ft. (.9 M) | 3 ft. (.9 M) |
| P | Clearance above paved sidewalk or paved driveway located on public property | 7 ft. (2.1 M)<br>Vent shall not terminate above a sidewalk or paved driveway that is located between two single family dwellings and serves both dwellings. | See Note 4.<br><br>Manufacturer's Recommendation: See Notes 3-8. |

> greater than, ≥ greater than or equal to, < less than, ≤ less than or equal to

Notes:

1 In accordance with the current CAN/CSA B149.1, Natural Gas and Propane Installation Code.

2 In accordance with the current ANSI Z223.1/NFPA 54, National Fuel Gas Code

3 ***NOTE: This table is based upon National codes for gas appliances, and are provided as a reference. Refer to Local codes which may supersede these standards and/or recommendations.***

4 For clearances not specified in ANSI Z223.1/NFPA 54 or CAN/CSA B 149.1, clearances shall be in accordance with local installation codes and the requirements of the gas supplier and the manufacturer's installation instructions.

5 When locating vent terminations, consideration must be given to prevailing winds, location, and other conditions which may cause recirculation of the combustion products of adjacent vents. Recirculation can cause poor combustion, inlet condensate problems, vent termination icing and/or accelerated corrosion of the heat exchangers.

6 Design and position vent outlets to avoid ice build-up on and moisture damage to surrounding surfaces.

7 The vent for this appliance shall not terminate:

a. Near soffit vents of crawl space vents or other areas where condensate or vapor could create a nuisance or hazard or property damage; or

b. Where condensate vapor could cause damage or could be detrimental to the operation of regulators, relief valves, or other equipment.

8 Avoid venting under a deck or large overhang. Recirculation could occur and cause performance or system problems. Ice build-up may occur.

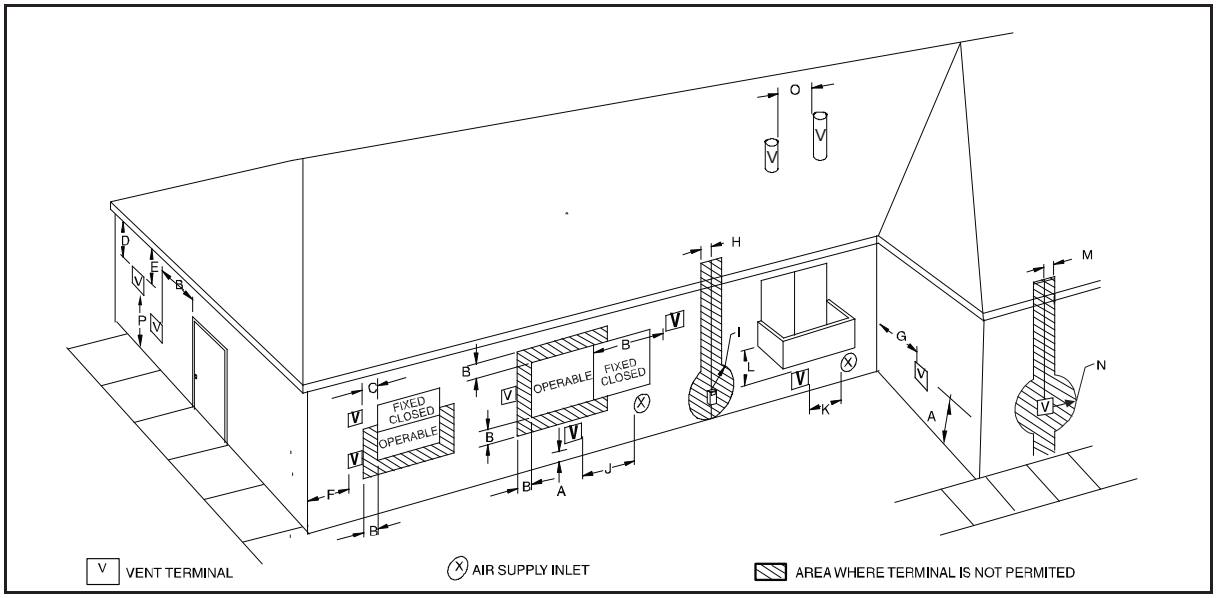


A12325

**Fig. 55 - Ventilated Combustion Air and Non-Direct Vent Termination Clearance**

**NOTE**: The following is based upon National codes for gas appliances and is provided as a reference. Refer to local codes which may supersede these standards and/or recommendations.

| Item | Clearance Description | Canadian Installations (1) (per CAN/CSA B149.1) | U.S. Installations (2) (per ANSI Z223.1/NFPA 54) |
|---|---|---|---|
| A | Clearance above grade, veranda, porch, deck, balcony or anticipated snow level | 12 in. (305 mm)<br>18 in. (457 mm) above roof surface. | 12 in. (305 mm) |
| B | Clearance to a window or door that may be opened | 12 in. (305 mm) for appliances >10,000 Btuh (3 kW) and </=100,000 Btuh ( 30 kW),<br>36 in. (914 mm) for appliances >100,000 Btuh (30 kW) | 4ft. (1.2M) below or to the side of the opening,<br>1 ft (.3M) above the opening.<br>Manufacturer's Recommendation: See Note 8. |
| C | Clearance to a permanently closed window | For clearances not specified in ANSI Z223.1/NFPA 54 or CAN/CSA B149.1, clearances shall be in accordance with local installation codes and the requirements of the gas supplier and the manufacturer's installation instructions.<br><br>Manufacturer's Recommendation: See Notes 3-8. | |
| D | Vertical clearance to a ventilated soffit located above the terminal within a horizontal distance of 2 feet (61 cm) from the centerline of the terminal | | |
| E | Clearance to an unventilated soffit | | |
| F | Clearance to an outside corner | | |
| G | Clearance to an inside corner | | |
| H | Clearance to each side of the centerline extended above electrical meter or gas service regulator assembly | 3 ft. (.9 M) within 15 ft. (4.6 M)<br>above the meter/regulator assembly. | 3 ft. (.9 M) within 15 ft. (4.6 M)<br>above the meter/regulator assembly. |
| I | Clearance to service regulator vent outlet | 3ft. (.9 M) | See Note 4. |
| J | Clearance to non—mechanical air supply inlet to building or the combustion air inlet to any other appliance | 12 in. (305 mm) for appliances >10,000 Btuh(3 kW) and </= 100,000 Btuh ( 30 kW),<br>36 in. (914 mm) for appliances >100,000 Btuh (30 kW) | 4ft. (1.2M) below or to the side of the opening,<br>1 ft (.3M) above the opening.<br>Manufacturer's Recommendation: See Note 8 |
| K | Clearance to a mechanical air supply inlet | 6 ft. (1.8 M) | 3ft. (.9 M) above if within 10 ft. (3 M) horizontally |
| L | Clearance under a veranda, porch, deck, or balcony | 12 in. (305 mm).<br>Permitted only if veranda, porch, deck, or balcony is fully open on a minimum of two sides beneath the floor. | See Note 4.<br><br>Manufacturer's Recommendation: See Notes 3-8. |
| M | Clearance to each side of the centerline extended above or below vent terminal of the furnace to a dryer or water heater vent, or other appliance's direct vent intake or exhaust | 12 in. (305 mm) | 12 in. (305 mm) |
| N | Clearance to a moisture exhaust duct<br>(dryer vent, spa exhaust, etc.) | 12 in. (305 mm) See Note 4 | 12 in. (305 mm) See Note 4 |
| 0 | Clearance from a plumbing vent stack | 3 ft. (.9 M) | 3 ft. (.9 M) |
| P | Clearance above paved sidewalk or paved driveway located on public property | 7 ft. (2.1 M).<br>Vent shall not terminate above a sidewalk or paved driveway that is located between two single-family dwellings and serves both dwellings. | 7ft. (2.1M) |

> greater than, ≥ greater than or equal to, < less than, ≤ less than or equal to

Notes:

1 In accordance with the current CAN/CSA B149.1, Natural Gas and Propane Installation Code.

2 In accordance with the current ANSI Z223.1/NFPA 54, National Fuel Gas Code

3 ***NOTE: This table is based upon National codes for gas appliances, and are provided as a reference. Refer to Local codes which may supersede these standards and/or recommendations.***

4 For clearances not specified in ANSI Z223.1/NFPA 54 or CAN/CSA B 149.1, clearances shall be in accordance with local installation codes and the requirements of the gas supplier and the manufacturer's installation instructions.

5 When locating vent terminations, consideration must be given to prevailing winds, location, and other conditions which may cause recirculation of the combustion products of adjacent vents. Recirculation can cause poor combustion, inlet condensation problems, vent termination icing and/or accelerated corrosion of the heat exchangers.

6 Design and position vent outlets to avoid ice build-up on and moisture damage to surrounding surfaces.

7 The vent for this appliance shall not terminate:

a. Near soffit vents of crawl space vents or other areas where condensate or vapor could create a nuisance or hazard or property damage; or

b. Where condensate vapor could cause damage or could be detrimental to the operation of regulators, relief valves, or other equipment.

8 These National standards apply to all non-direct-vent gas appliances. Contact Local code officials for additional requirements and/or exclusions.

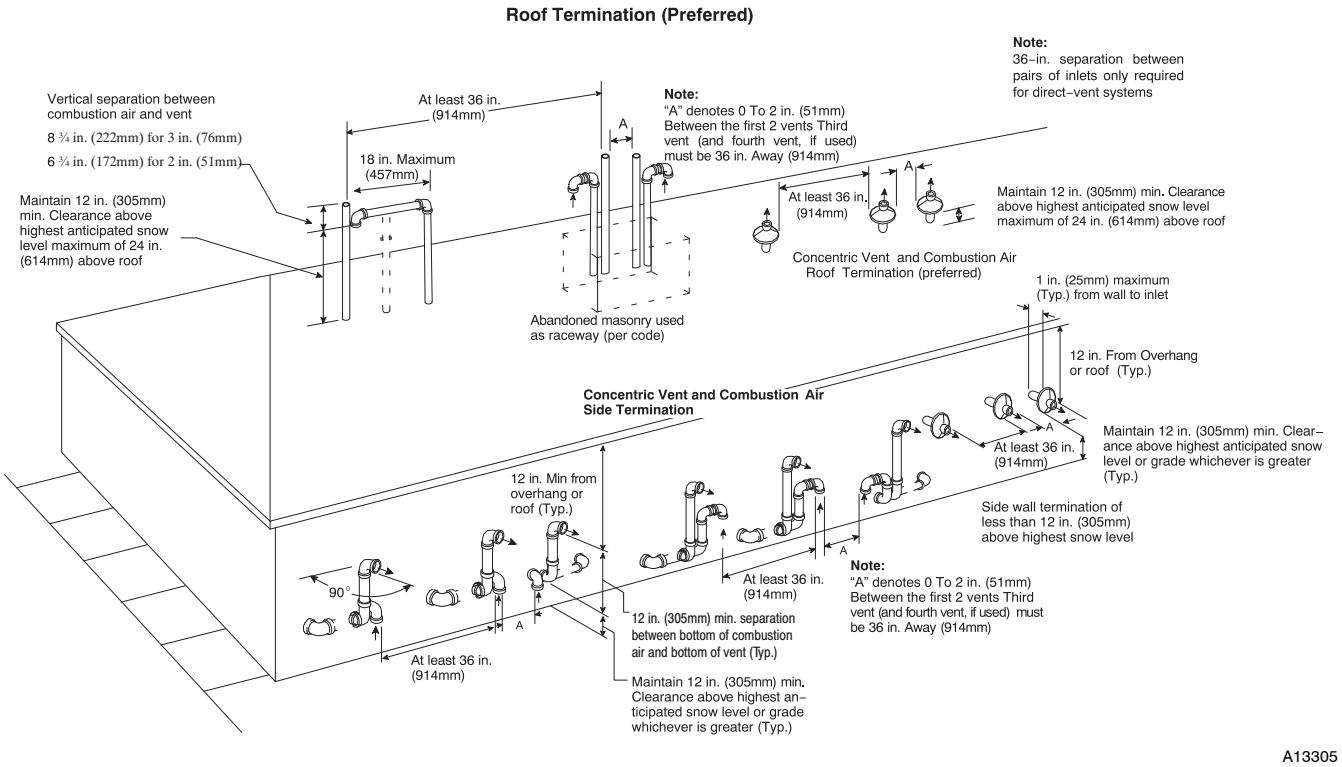


**Fig. 56 - Combustion Air and Vent Pipe Termination for Direct Vent (2-Pipe) System**

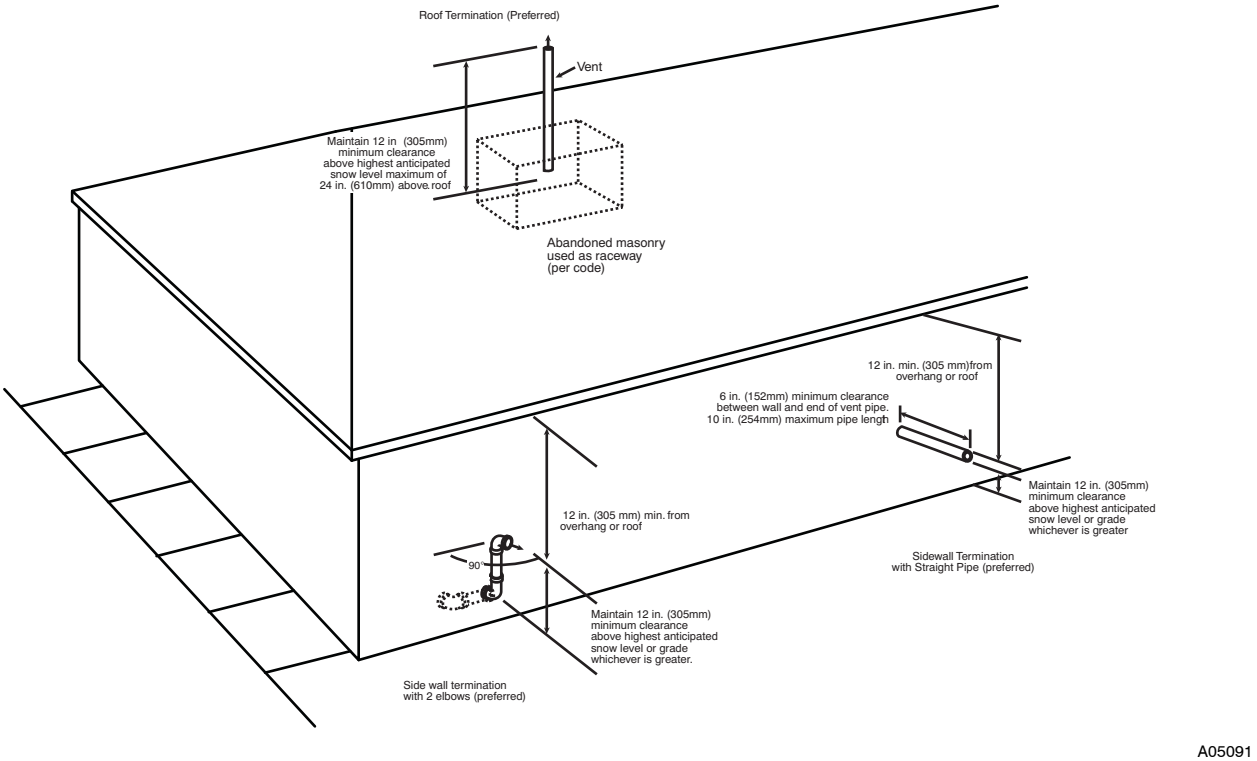


**Fig. 57 - Vent Pipe Termination for Non-Direct Vent and Ventilated Combustion Air System**

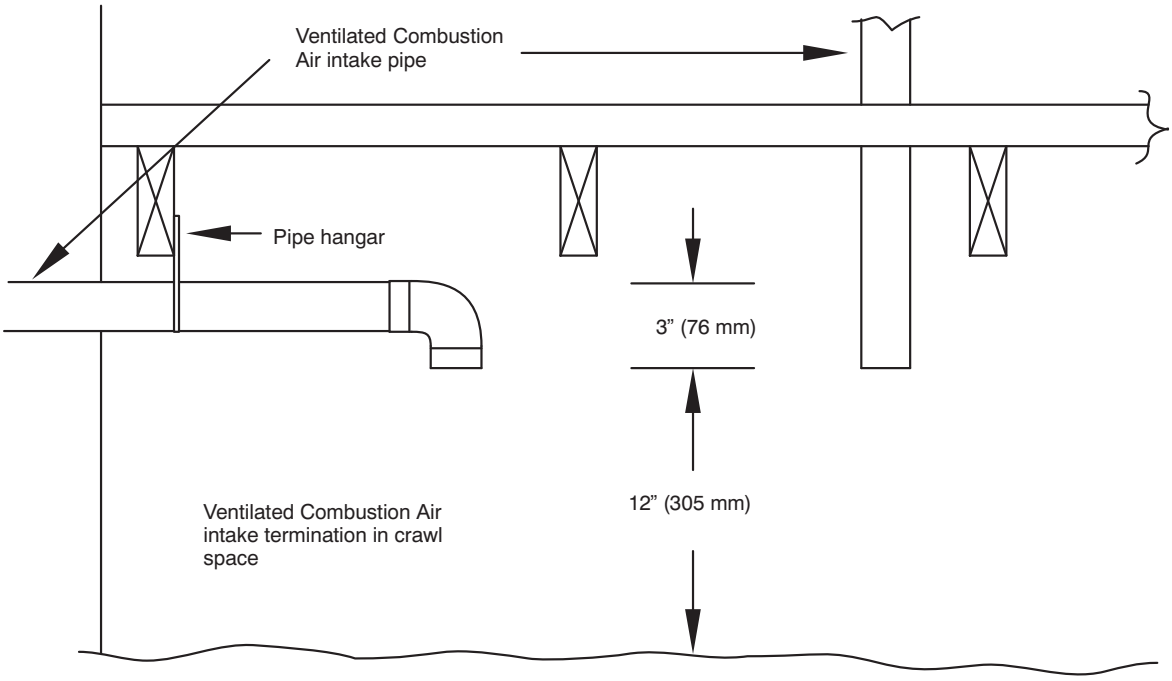


CRAWL SPACE

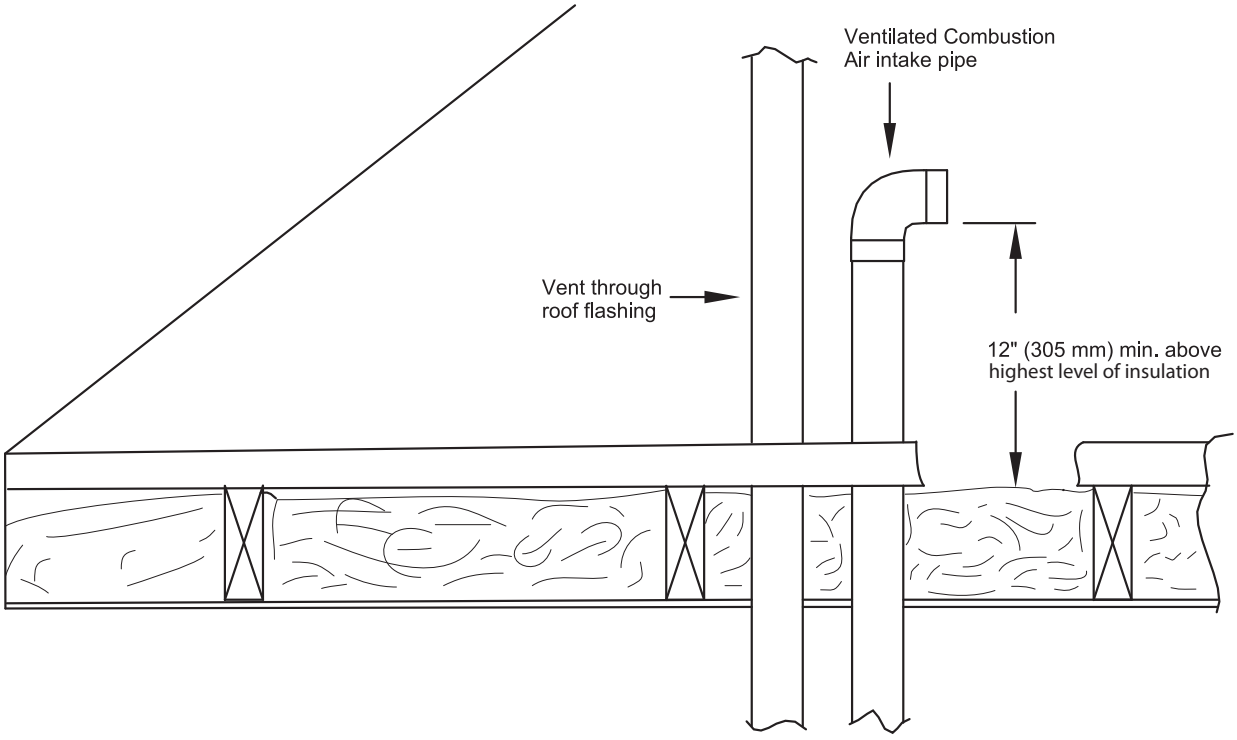


ATTIC

A10497

**Fig. 58 - Vent Terminations for Ventilated Combustion Air**

## START-UP, ADJUSTMENT, AND SAFETY CHECK

### General

**⚠ WARNING**

**FIRE HAZARD**

Failure to follow this warning could result in personal injury, death and/or property damage.

This furnace is equipped with manual reset limit switches in the gas control area. The switches open and shut off power to the gas valve if a burner or heat exchanger overheating condition occurs in the gas control area. DO NOT bypass the switches. Correct inadequate combustion air supply problem before resetting the switches.

**⚠ CAUTION**

**CUT HAZARD**

Failure to follow this caution may result in personal injury.

Sheet metal parts may have sharp edges or burrs. Use care and wear appropriate protective clothing, safety glasses and gloves when handling parts and servicing furnaces.

1. Maintain 115-v wiring and ground. Improper polarity will result in rapid flashing LED and no furnace operation.
2. Make thermostat wire connections at the 24-v terminal block on the furnace control. Failure to make proper connections will result in improper operation. (Fig. 41)
3. Gas supply pressure to the furnace must be greater than 4.5 in. W.C. (0.16 psig ) but not exceed 14 in. W.C. (0.5 psig).
4. Check all manual-reset switch(es) for continuity.
5. Install blower compartment door. Door must be in place to operate furnace.

### Start-Up Procedures

**⚠ WARNING**

**FIRE AND EXPLOSION HAZARD**

Failure to follow this warning could cause personal injury, death and/or property damage.

Never test for gas leaks with an open flame. Use a commercially available soap solution made specifically for the detection of leaks to check all connections. A fire or explosion may result causing property damage, personal injury or loss of life.

1. Purge gas lines after all connections have been made.
2. Check gas lines for leaks.
3. Verify furnace shut down by lowering thermostat setting below room temperature.
4. Verify furnace restarts by raising thermostat setting above room temperature.

### Prime Condensate Trap with Water

**⚠ CAUTION**

**UNIT OPERATION HAZARD**

Failure to follow this caution may result in intermittent unit operation or performance satisfaction.

Condensate trap must be PRIMED or proper draining may not occur. The condensate trap has two internal chambers which can ONLY be primed by pouring water into the inducer drain side of condensate trap.

1. Remove upper and middle collector box drain plugs opposite of the condensate trap.
2. Connect field-supplied 5/8-in. (16 mm) ID tube with attached funnel to upper collector box drain connection.
3. Pour one quart (liter) of water into funnel/tube. Water should run through collector box, overfill condensate trap, and flow into open field drain.
4. Remove funnel; replace collector box drain plug.
5. Connect field-supplied 5/8-in. (16 mm) ID tube to middle collector box drain port.
6. Pour one quart (liter) of water into funnel/tube. Water should run through collector box, overfill condensate trap, and flow into open field drain.
7. Remove funnel and tube from collector box and replace collector box drain plug.

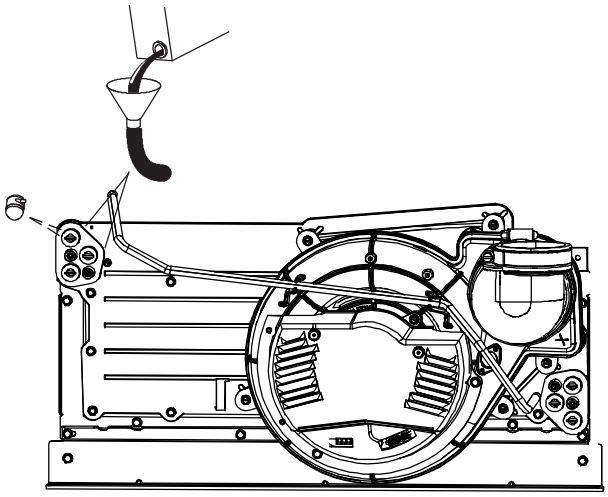

Representative drawing only, some models may vary.

A190304

**Fig. 59 - Prime Condensate Trap**

### Adjustments

**⚠ WARNING**

**FIRE HAZARD**

Failure to follow this warning could result in injury, death and/or property damage.

DO NOT bottom out gas valve regulator adjusting screw. This can result in unregulated gas valve outlet pressure and result in excess overfire and heat exchanger failures.

## ⚠ CAUTION

**FURNACE DAMAGE HAZARD**

Failure to follow this caution may result in reduced furnace life.

DO NOT redrill orifices. Improper drilling (burrs, out-of-round holes, etc.) can cause excessive burner noise and misdirection of inlet gas. (Fig. 61)

Furnace gas input rate on rating plate is for installation at altitudes up to 2,000 ft. (610 M). Furnace input rate must be within +/-2 percent of furnace rating plate input.

The input rating for altitudes above 2,000 ft. (610 M) must be reduced by 2 percent for each 1,000 ft. (305 M) above sea level. For installations below 2,000 ft. (610 M), refer to the unit rating plate. For installation above 2,000 ft. (610 M), multiply the input on the rating plate by the derate multiplier for the correct input rate (Table 20).

**Table 20 – Altitude Derate Multiplier for USA**

| ALTITUDE (FT. / M) | PERCENT OF DERATE | DERATE MULTIPLIER FACTOR* |
|---|---|---|
| 0–2000 (0–610) | 0 | 1.00 |
| 2001–3000 (610–914) | 4–6 | 0.95 |
| 3001–4000 (914–1219) | 6–8 | 0.93 |
| 4001–5000 (1219–1524) | 8–10 | 0.91 |
| 5001–5400 (1525–1646) | 10–11 | 0.90 |

*Derate multiplier factors are based on midpoint altitude for altitude range.

1. Determine the correct gas input rate. Refer to the unit rating plate
2. Determine the correct outlet gas pressure adjustment.
   a. Obtain average yearly gas heat value (at installed altitude) from local gas supplier.
   b. Obtain average yearly gas specific gravity from local gas supplier.
   c. Find closest natural gas heat value and specific gravity (Table 22 through Table 24).
   d. Follow heat value and specific gravity lines to point of intersection to find outlet pressure setting for proper operation.
3. Check Inlet Gas Pressure

The inlet gas pressure must be checked with the furnace operating. This is necessary to make sure the inlet gas pressure does not fall below the minimum pressure of 4.5 in. w.c.

   a. Make sure the gas supply is turned off to the furnace and at the electric switch on the gas valve
   b. Loosen set screw on inlet tower pressure tap no more than one full turn with a 3/32- in. hex wrench or remove the 1/8- in. NPT plug from the inlet pressure tap on the gas valve.
   c. Connect a manometer to the inlet pressure tap on gas valve.
   d. Turn on furnace power supply.
   e. Turn gas supply manual shutoff valve to ON position.
   f. Turn furnace gas valve switch to ON position.
   g. Jumper R and W thermostat connections at the furnace control board.
   h. When main burners ignite, confirm inlet gas pressure is between 4.5 in. W.C. (1125 Pa) and 13.6 in. W.C. (3388 Pa).
   i. Remove jumper across thermostat connections to terminate call for heat. Wait until the blower off delay is completed.
   j. Turn furnace gas valve electric switch to OFF position.
   k. Turn gas supply manual shutoff valve to OFF position.
   l. Turn off furnace power supply.
   m. Remove manometer from the inlet pressure tap of the gas valve.
   n. Tighten set screw on inlet tower pressure tap with 3/32- in. hex wrench, or if 1/8- in. NPT plug was removed, apply pipe dope sparingly to end of plug and re- install in the gas valve

## ⚠ WARNING

**FIRE HAZARD**

Failure to follow this warning could result in personal injury, death, and/or property damage.

Inlet pressure tap set screw must be tightened and 1/8-in. NPT pipe plug must be installed to prevent gas leaks.

4. Adjust gas valve outlet pressure determined in Step 2. to obtain correct input rate.
   a. Turn gas valve ON/OFF switch to OFF.
   b. Loosen set screw on outlet tower pressure tap no more than one full turn with a 3/32 in. hex wrench. (Fig. 60)
   c. Connect a water column manometer or similar device to pressure tap on the gas valve.
   d. Turn gas valve ON/OFF switch to ON.
   e. Manually close blower door switch.
   f. Set thermostat to call for heat.
   g. Remove regulator seal cap and turn regulator adjusting screw counterclockwise (out) to decrease input rate of clockwise (in) to increase input rate.
   h. Install regulator seal cap.
   i. Leave manometer or similar device connected and proceed to next step.

**NOTE**: If damaged or it is suspected to have been redrilled, check orifice hole with a numbered drill bit of correct size. Never redrill an orifice. A burr-free and properly sized orifice hole is essential for proper flame characteristics.

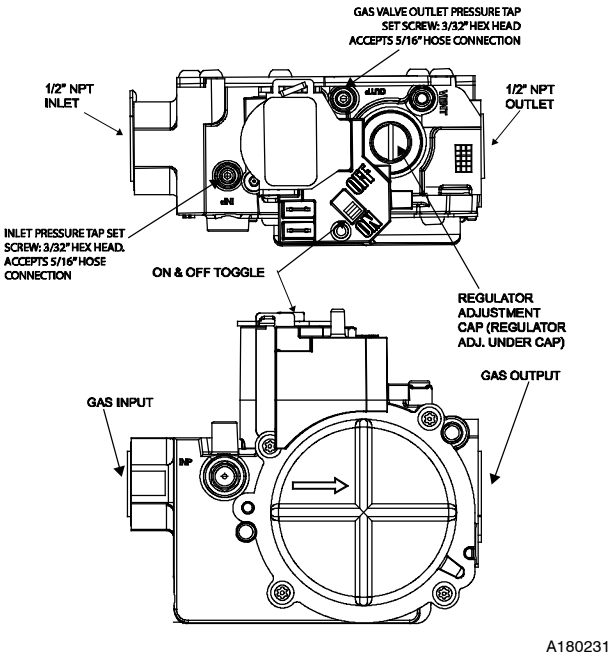


**Fig. 60 - Gas Control Valve**

5. Verify natural gas input rate by clocking meter.

**NOTE**: Gas valve regulator adjustment cap must be in place for proper input to be clocked.

a. Turn off all other gas appliances and pilots served by the meter.
b. Jumper R and W thermostat connections at the furnace control board.
c. Run furnace for 15 minutes in heating operation.
d. Measure time (in seconds) for gas meter to complete 1 revolution and note reading. The 2 or 5 cubic feet dial provides a more accurate measurement of gas flow.
e. For cubic ft. of gas per hr (Table 21).
f. Multiply gas rate (cu ft./hr) by heating value (Btuh/cu ft.) to obtain input.

If clocked rate does not match required input from Step 1, increase gas valve outlet pressure to increase input or decrease gas valve outlet pressure to decrease input. Repeat steps b through e until correct input is achieved. Reinstall regulator seal cap on gas valve.

6. Restore furnace to normal operating condition.
   a. When correct input rate and temperature rise is achieved, turn gas valve ON/OFF switch to OFF.
   b. Remove manometer or similar device from gas valve.
   c. Tighten set screw on outlet tower pressure tap with 3/32 in. hex wrench.
   d. Turn gas valve ON/OFF switch to ON.
   e. Check for gas leaks and verify furnace operation.
7. Set temperature rise. The furnace must operate within the temperature rise ranges specified on the furnace rating plate. Determine the temperature rise as follows:

**NOTE**: Blower access door must be installed when taking temperature rise reading. Leaving blower access door off will result in incorrect temperature measurements.

**⚠ CAUTION**

**FURNACE DAMAGE HAZARD**

Failure to follow this caution may result in:

Overheating the heat exchangers or condensing flue gases in heat exchanger areas not designed for condensate.

Shortened furnace life

Component damage

Temperature rise must be within limits specified on furnace rating plate. Recommended operation is at midpoint of rise range or slightly above.

**⚠ WARNING**

**ELECTRICAL SHOCK HAZARD**

Failure to follow this warning could result in personal injury or death.

Disconnect 115-v electrical power and install lockout tag before changing speed tap.

a. Place thermometers in return and supply ducts as close to furnace as possible. Be sure thermometers do not see radiant heat from heat exchangers. Radiant heat affects temperature rise readings. This practice is particularly important with straight-run ducts.
b. When thermometer readings stabilize, subtract return-air temperature from supply-air temperature to determine air temperature rise.

**NOTE**: If the temperature rise is outside this range, first check:

(3.) Gas input for heating operation.
(4.) Return and supply ducts for excessive restrictions causing static pressures greater than the maximum heating static listed on the rating plate.

c. Adjust air temperature rise by adjusting blower speed. Increase blower speed to reduce temperature rise. Decrease blower speed to increase temperature rise
d. Turn thermostat down below room temperature and remove blower access door.
e. To change motor speed selection for heating, remove blower motor lead from control HEAT terminal - Wiring Diagram (Fig. 67) Select desired blower motor speed lead from one of the other terminals and relocate it to the HEAT terminal - lead color identification (Table 11). Reconnect original lead to SPARE terminal.
f. Repeat steps a through e.

8. Set thermostat heat anticipator.
   a. Mechanical thermostat - Set thermostat heat anticipator to match the amp. draw of the electrical components in the R-W circuit. Accurate amp. draw readings can be obtained at the wires normally connected to thermostat subbase terminals, R and W. The thermostat anticipator should NOT be in the circuit while measuring current.

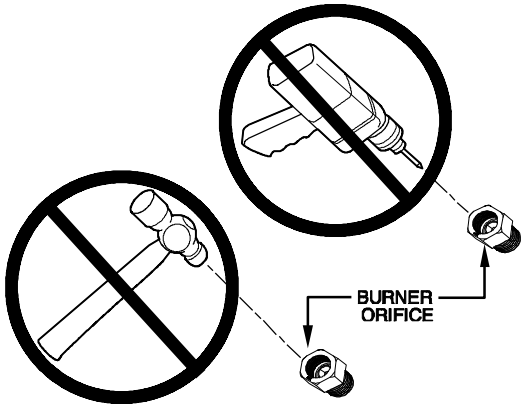


A180238

**Fig. 61 - Orifice Hole**

**⚠ WARNING**

**FIRE HAZARD**

Failure to follow this warning could result in personal injury, death, and/or property damage.

Gas valve outlet pressure tap must be tightened to prevent gas leak.

**⚠ CAUTION**

**FURNACE OVERHEATING HAZARD**

Failure to follow this caution may result in reduced furnace life.

Recheck temperature rise. It must be within limits specified on the rating plate. Recommended operation is at the mid-point of rise range or slightly above.

(1.) Remove thermostat from subbase or from wall.

(2.) Connect an amp. meter (Fig. 62) across the R and W subbase terminals or R and W wires at wall.

(3.) Record amp. draw across terminals when furnace is in heating and after blower starts.

(4.) Set heat anticipator on thermostat per thermostat instructions and install on subbase or wall.

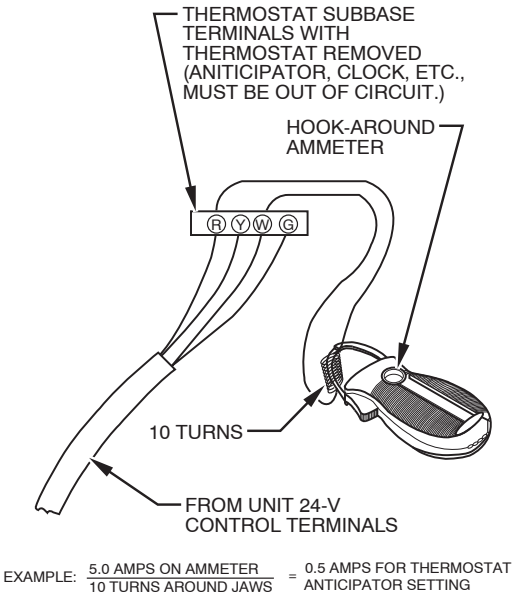


**Fig. 62 - Amp. Draw Check With Ammeter**

b. Electronic thermostat: Set cycle rate for 4 cycles per hr.

9. Adjust Cooling Airflow. The cooling airflow can be set from the remaining blower speed taps. Refer to the Air Delivery Tables in these instructions.
10. Adjust blower off delay. The blower off delay has four (4) adjustable settings from 90 seconds to 180 seconds. The blower off delay jumpers are located on the furnace control board - see wiring diagram (Fig. 67). Position A-90 seconds, B-120 seconds, C-150 seconds, D-180 seconds. To change the blower off delay setting, move the jumper from one set of pins on the control to the pins used for the selected blower off delay. Factory off delay setting is 120 seconds.
11. Cooling On Delay is fixed at 2 seconds for either jumper selection.

**Check Safety Controls**

1. Check Main Limit Switch(es)
   This control shuts off combustion control system and energizes air-circulating blower motor, if furnace overheats. By using this method to check limit control, it can be established that limit is functioning properly and will operate if there is a restricted duct system or motor failure. If limit control does not function during this test, cause must be determined and corrected.
   a. Run furnace for at least 5 minutes.
   b. Gradually block off return air with a piece of cardboard or sheet metal until the limit trips.
   c. Unblock return air to permit normal circulation.
   d. Main limit circuit open causes 3 hour lock out.
   e. Burners will re-light when furnace cools down.

## Checklist

1. Put away tools and instruments. Clean up debris.
2. Verify that the Blower/Heat Off Delay jumpers are set as desired. (Fig. 41 and Fig. 67).
3. Verify that there are no unsealed openings in the blower shelf or casing.
4. Verify that the blower (lower door in upflow position) and control ("Main" or upper door in upflow position) doors are properly installed.
5. Verify that the Status LED glows. If not, check that the power supply is energized and that the blower door is secure. Interpret diagnostic codes (Fig. 63).
6. Cycle test furnace with room thermostat to be sure that it operates properly with the room thermostat. Check all modes including Heat, Cool and Fan.
7. Check operation of accessories per manufacturer's instructions.
8. Review Owner's Manual with owner.
9. Attach entire literature packet to furnace.

**Table 21 – Gas Rate (CU ft./hr)**

| SECONDS FOR 1 REVOLUTION | SIZE OF TEST DIAL | | | SECONDS FOR 1 REVOLUTION | SIZE OF TEST DIAL | | |
|---|---|---|---|---|---|---|---|
| | 1 Cu Ft. | 2 Cu Ft. | 5 Cu Ft. | | 1 Cu Ft. | 2 Cu Ft. | 5 Cu Ft. |
| 10 | 360 | 720 | 1800 | 55 | 65 | 131 | 327 |
| 11 | 327 | 655 | 1636 | 56 | 64 | 129 | 321 |
| 12 | 300 | 600 | 1500 | 57 | 63 | 126 | 316 |
| 13 | 277 | 555 | 1385 | 58 | 62 | 124 | 310 |
| 14 | 257 | 514 | 1286 | 59 | 61 | 122 | 305 |
| 15 | 240 | 480 | 1200 | 60 | 60 | 120 | 300 |
| 16 | 225 | 450 | 1125 | 62 | 58 | 116 | 290 |
| 17 | 212 | 424 | 1059 | 64 | 56 | 112 | 281 |
| 18 | 200 | 400 | 1000 | 66 | 54 | 109 | 273 |
| 19 | 189 | 379 | 947 | 68 | 53 | 106 | 265 |
| 20 | 180 | 360 | 900 | 70 | 51 | 103 | 257 |
| 21 | 171 | 343 | 857 | 72 | 50 | 100 | 250 |
| 22 | 164 | 327 | 818 | 74 | 48 | 97 | 243 |
| 23 | 157 | 313 | 783 | 76 | 47 | 95 | 237 |
| 24 | 150 | 300 | 750 | 78 | 46 | 92 | 231 |
| 25 | 144 | 288 | 720 | 80 | 45 | 90 | 225 |
| 26 | 138 | 277 | 692 | 82 | 44 | 88 | 220 |
| 27 | 133 | 267 | 667 | 84 | 43 | 86 | 214 |
| 28 | 129 | 257 | 643 | 86 | 42 | 84 | 209 |
| 29 | 124 | 248 | 621 | 88 | 41 | 82 | 205 |
| 30 | 120 | 240 | 600 | 90 | 40 | 80 | 200 |
| 31 | 116 | 232 | 581 | 92 | 39 | 78 | 196 |
| 32 | 113 | 225 | 563 | 94 | 38 | 76 | 192 |
| 33 | 109 | 218 | 545 | 96 | 38 | 75 | 188 |
| 34 | 106 | 212 | 529 | 98 | 37 | 74 | 184 |
| 35 | 103 | 206 | 514 | 100 | 36 | 72 | 180 |
| 36 | 100 | 200 | 500 | 102 | 35 | 71 | 178 |
| 37 | 97 | 195 | 486 | 104 | 35 | 69 | 173 |
| 38 | 95 | 189 | 474 | 106 | 34 | 68 | 170 |
| 39 | 92 | 185 | 462 | 108 | 33 | 67 | 167 |
| 40 | 90 | 180 | 450 | 110 | 33 | 65 | 164 |
| 41 | 88 | 176 | 439 | 112 | 32 | 64 | 161 |
| 42 | 86 | 172 | 429 | 116 | 31 | 62 | 155 |
| 43 | 84 | 167 | 419 | 120 | 30 | 60 | 150 |
| 44 | 82 | 164 | 409 | 124 | 29 | 58 | 145 |
| 45 | 80 | 160 | 400 | 129 | 28 | 56 | 140 |
| 46 | 78 | 157 | 391 | 133 | 27 | 54 | 135 |
| 47 | 76 | 153 | 383 | 138 | 26 | 52 | 130 |
| 48 | 75 | 150 | 375 | 144 | 25 | 50 | 125 |
| 49 | 73 | 147 | 367 | 150 | 24 | 48 | 120 |
| 50 | 72 | 144 | 360 | 157 | 23 | 46 | 115 |
| 51 | 71 | 141 | 355 | 164 | 22 | 44 | 110 |
| 52 | 69 | 138 | 346 | 171 | 21 | 42 | 105 |
| 53 | 68 | 136 | 340 | 180 | 20 | 40 | 100 |
| 54 | 67 | 133 | 333 | | | | |

**Table 22 – Gas Valve Outlet Pressure for Gas Heat Values at Altitude - 60,000**

| (Tabulated Data Based on 60,000 BTUH Input for 0-ft (0m) to 5400-ft (1646 M) above sea level) | | | | | | | |
|---|---|---|---|---|---|---|---|
| ALTI-TUDE RANGE ft (m) | AVG. GAS HEAT VALUE AT ALTITUDE (Btu/cu ft) | SPECIFIC GRAVITY OF NATURAL GAS | | | | | |
| | | 0.58 | 0.60 | 0.62 | 0.64 | 0.66 | 0.68 |
| | | Manifold Pressure | | | | | |
| 0 (0) to 2000 (610) | 900 | 2.8 | 2.9 | 3.0 | 3.1 | 3.1 | 3.1 |
| | 925 | 2.6 | 2.7 | 2.8 | 2.9 | 3.0 | 3.1 |
| | 950 | 2.5 | 2.6 | 2.7 | 2.8 | 2.9 | 2.9 |
| | 975 | 2.4 | 2.5 | 2.5 | 2.6 | 2.7 | 2.8 |
| | 1000 | 2.3 | 2.3 | 2.4 | 2.5 | 2.6 | 2.7 |
| | 1025 | 2.2 | 2.2 | 2.3 | 2.4 | 2.5 | 2.5 |
| | 1050 | 2.1 | 2.1 | 2.2 | 2.3 | 2.3 | 2.4 |
| | 1075 | 2.0 | 2.0 | 2.1 | 2.2 | 2.2 | 2.3 |
| | 1100 | 1.9 | 1.9 | 2.0 | 2.1 | 2.1 | 2.2 |
| 2001 (611) to 3000 (914) | 800 | 3.0 | 3.1 | 3.1 | 3.1 | 3.1 | 3.1 |
| | 825 | 2.8 | 2.9 | 3.0 | 3.1 | 3.1 | 3.1 |
| | 850 | 2.7 | 2.8 | 2.9 | 3.0 | 3.0 | 3.1 |
| | 875 | 2.5 | 2.6 | 2.7 | 2.8 | 2.9 | 3.0 |
| | 900 | 2.4 | 2.5 | 2.6 | 2.6 | 2.7 | 2.8 |
| | 925 | 2.3 | 2.3 | 2.4 | 2.5 | 2.6 | 2.7 |
| | 950 | 2.1 | 2.2 | 2.3 | 2.4 | 2.4 | 2.5 |
| | 975 | 2.0 | 2.1 | 2.2 | 2.2 | 2.3 | 2.4 |
| | 1000 | 1.9 | 2.0 | 2.1 | 2.1 | 2.2 | 2.3 |
| 3001 (915) to 4000 (1219) | 775 | 3.0 | 3.1 | 3.1 | 3.1 | 3.1 | 3.1 |
| | 800 | 2.8 | 2.9 | 3.0 | 3.1 | 3.1 | 3.1 |
| | 825 | 2.6 | 2.7 | 2.8 | 2.9 | 3.0 | 3.1 |
| | 850 | 2.5 | 2.6 | 2.6 | 2.7 | 2.8 | 2.9 |
| | 875 | 2.3 | 2.4 | 2.5 | 2.6 | 2.7 | 2.7 |
| | 900 | 2.2 | 2.3 | 2.4 | 2.4 | 2.5 | 2.6 |
| | 925 | 2.1 | 2.2 | 2.2 | 2.3 | 2.4 | 2.4 |
| | 950 | 2.0 | 2.0 | 2.1 | 2.2 | 2.3 | 2.3 |
| | 975 | 1.9 | 1.9 | 2.0 | 2.1 | 2.1 | 2.2 |
| | 1000 | 1.8 | 1.8 | 1.9 | 2.0 | 2.0 | 2.1 |
| 4001 (1220) to 5000 (1524) | 750 | 2.9 | 3.0 | 3.1 | 3.1 | 3.1 | 3.1 |
| | 775 | 2.7 | 2.8 | 2.9 | 3.0 | 3.1 | 3.1 |
| | 800 | 2.6 | 2.7 | 2.8 | 2.8 | 2.9 | 3.0 |
| | 825 | 2.4 | 2.5 | 2.6 | 2.7 | 2.8 | 2.8 |
| | 850 | 2.3 | 2.4 | 2.4 | 2.5 | 2.6 | 2.7 |
| | 875 | 2.2 | 2.2 | 2.3 | 2.4 | 2.5 | 2.5 |
| | 900 | 2.0 | 2.1 | 2.2 | 2.2 | 2.3 | 2.4 |
| | 925 | 1.9 | 2.0 | 2.1 | 2.1 | 2.2 | 2.3 |
| | 950 | 1.8 | 1.9 | 2.0 | 2.0 | 2.1 | 2.1 |
| | 975 | 1.8 | 1.8 | 1.9 | 1.9 | 2.0 | 2.0 |
| | 1000 | 1.8 | 1.8 | 1.8 | 1.8 | 1.9 | 1.9 |
| 5001 (1525) to 5400 (1646) | 725 | 2.9 | 3.0 | 3.1 | 3.1 | 3.1 | 3.1 |
| | 750 | 2.7 | 2.8 | 2.9 | 3.0 | 3.1 | 3.1 |
| | 775 | 2.6 | 2.7 | 2.8 | 2.8 | 2.9 | 3.0 |
| | 800 | 2.4 | 2.5 | 2.6 | 2.7 | 2.7 | 2.8 |
| | 825 | 2.3 | 2.3 | 2.4 | 2.5 | 2.6 | 2.7 |
| | 850 | 2.1 | 2.2 | 2.3 | 2.4 | 2.4 | 2.5 |
| | 875 | 2.0 | 2.1 | 2.2 | 2.2 | 2.3 | 2.4 |
| | 900 | 1.9 | 2.0 | 2.0 | 2.1 | 2.2 | 2.2 |
| | 925 | 1.8 | 1.9 | 1.9 | 2.0 | 2.1 | 2.1 |
| | 950 | 1.8 | 1.8 | 1.8 | 1.9 | 1.9 | 2.0 |
| | 975 | 1.8 | 1.8 | 1.8 | 1.8 | 1.9 | 1.9 |
| | 1000 | 1.8 | 1.8 | 1.8 | 1.8 | 1.8 | 1.8 |

**Table 23 – Gas Valve Outlet Pressure for Gas Heat Values at Altitude - 80,000**

| (Tabulated Data Based on 80,000 BTUH Input for 0-ft (0m) to 5400-ft (1646 M) above sea level) | | | | | | | |
|---|---|---|---|---|---|---|---|
| ALTI-TUDE RANGE ft (m) | AVG. GAS HEAT VALUE AT ALTITUDE (Btu/cu ft) | SPECIFIC GRAVITY OF NATURAL GAS | | | | | |
| | | 0.58 | 0.60 | 0.62 | 0.64 | 0.66 | 0.68 |
| | | Manifold Pressure | | | | | |
| 0 (0) to 2000 (610) | 900 | 2.7 | 2.8 | 2.9 | 3.0 | 3.1 | 3.1 |
| | 925 | 2.6 | 2.7 | 2.8 | 2.8 | 2.9 | 3.0 |
| | 950 | 2.4 | 2.5 | 2.6 | 2.7 | 2.8 | 2.9 |
| | 975 | 2.3 | 2.4 | 2.5 | 2.6 | 2.6 | 2.7 |
| | 1000 | 2.2 | 2.3 | 2.4 | 2.4 | 2.5 | 2.6 |
| | 1025 | 2.1 | 2.2 | 2.2 | 2.3 | 2.4 | 2.5 |
| | 1050 | 2.0 | 2.1 | 2.1 | 2.2 | 2.3 | 2.3 |
| | 1075 | 1.9 | 2.0 | 2.0 | 2.1 | 2.2 | 2.2 |
| | 1100 | 1.8 | 1.9 | 1.9 | 2.0 | 2.1 | 2.1 |
| 2001 (611) to 3000 (914) | 800 | 2.9 | 3.0 | 3.1 | 3.1 | 3.1 | 3.1 |
| | 825 | 2.8 | 2.9 | 3.0 | 3.1 | 3.1 | 3.1 |
| | 850 | 2.6 | 2.7 | 2.8 | 2.9 | 3.0 | 3.1 |
| | 875 | 2.5 | 2.5 | 2.6 | 2.7 | 2.8 | 2.9 |
| | 900 | 2.3 | 2.4 | 2.5 | 2.6 | 2.6 | 2.7 |
| | 925 | 2.2 | 2.3 | 2.4 | 2.4 | 2.5 | 2.6 |
| | 950 | 2.1 | 2.2 | 2.2 | 2.3 | 2.4 | 2.4 |
| | 975 | 2.0 | 2.0 | 2.1 | 2.2 | 2.3 | 2.3 |
| | 1000 | 1.9 | 1.9 | 2.0 | 2.1 | 2.1 | 2.2 |
| 3001 (915) to 4000 (1219) | 775 | 2.9 | 3.0 | 3.1 | 3.1 | 3.1 | 3.1 |
| | 800 | 2.7 | 2.8 | 2.9 | 3.0 | 3.1 | 3.1 |
| | 825 | 2.6 | 2.6 | 2.7 | 2.8 | 2.9 | 3.0 |
| | 850 | 2.4 | 2.5 | 2.6 | 2.7 | 2.7 | 2.8 |
| | 875 | 2.3 | 2.4 | 2.4 | 2.5 | 2.6 | 2.7 |
| | 900 | 2.1 | 2.2 | 2.3 | 2.4 | 2.4 | 2.5 |
| | 925 | 2.0 | 2.1 | 2.2 | 2.2 | 2.3 | 2.4 |
| | 950 | 1.9 | 2.0 | 2.1 | 2.1 | 2.2 | 2.3 |
| | 975 | 1.8 | 1.9 | 2.0 | 2.0 | 2.1 | 2.1 |
| | 1000 | 1.8 | 1.8 | 1.9 | 1.9 | 2.0 | 2.0 |
| 4001 (1220) to 5000 (1524) | 750 | 2.9 | 3.0 | 3.0 | 3.1 | 3.1 | 3.1 |
| | 775 | 2.7 | 2.8 | 2.9 | 2.9 | 3.0 | 3.1 |
| | 800 | 2.5 | 2.6 | 2.7 | 2.8 | 2.9 | 2.9 |
| | 825 | 2.4 | 2.4 | 2.5 | 2.6 | 2.7 | 2.8 |
| | 850 | 2.2 | 2.3 | 2.4 | 2.5 | 2.5 | 2.6 |
| | 875 | 2.1 | 2.2 | 2.2 | 2.3 | 2.4 | 2.5 |
| | 900 | 2.0 | 2.0 | 2.1 | 2.2 | 2.3 | 2.3 |
| | 925 | 1.9 | 1.9 | 2.0 | 2.1 | 2.1 | 2.2 |
| | 950 | 1.8 | 1.8 | 1.9 | 2.0 | 2.0 | 2.1 |
| | 975 | 1.8 | 1.8 | 1.8 | 1.9 | 1.9 | 2.0 |
| | 1000 | 1.8 | 1.8 | 1.8 | 1.8 | 1.8 | 1.9 |
| 5001 (1525) to 5400 (1646) | 725 | 2.9 | 3.0 | 3.1 | 3.1 | 3.1 | 3.1 |
| | 750 | 2.7 | 2.8 | 2.9 | 3.0 | 3.0 | 3.1 |
| | 775 | 2.5 | 2.6 | 2.7 | 2.8 | 2.9 | 2.9 |
| | 800 | 2.4 | 2.4 | 2.5 | 2.6 | 2.7 | 2.8 |
| | 825 | 2.2 | 2.3 | 2.4 | 2.4 | 2.5 | 2.6 |
| | 850 | 2.1 | 2.2 | 2.2 | 2.3 | 2.4 | 2.4 |
| | 875 | 2.0 | 2.0 | 2.1 | 2.2 | 2.2 | 2.3 |
| | 900 | 1.9 | 1.9 | 2.0 | 2.0 | 2.1 | 2.2 |
| | 925 | 1.8 | 1.8 | 1.9 | 1.9 | 2.0 | 2.1 |
| | 950 | 1.8 | 1.8 | 1.8 | 1.8 | 1.9 | 2.0 |
| | 975 | 1.8 | 1.8 | 1.8 | 1.8 | 1.8 | 1.9 |
| | 1000 | 1.8 | 1.8 | 1.8 | 1.8 | 1.8 | 1.8 |

**Table 24 – Gas Valve Outlet Pressure for Gas Heat Values at Altitude - 100,000**

| (Tabulated Data Based on 100,000 BTUH Input for 0-ft (0m) to 5400-ft (1646 M) above sea level) | | | | | | | |
|---|---|---|---|---|---|---|---|
| ALTITUDE RANGE ft (m) | AVG. GAS HEAT VALUE AT ALTITUDE (Btu/cu ft) | SPECIFIC GRAVITY OF NATURAL GAS | | | | | |
| | | 0.58 | 0.60 | 0.62 | 0.64 | 0.66 | 0.68 |
| | | Manifold Pressure | | | | | |
| 0 (0) to 2000 (610) | 900 | 2.7 | 2.8 | 2.9 | 3.0 | 3.1 | 3.1 |
| | 925 | 2.6 | 2.7 | 2.7 | 2.8 | 2.9 | 3.0 |
| | 950 | 2.4 | 2.5 | 2.6 | 2.7 | 2.8 | 2.9 |
| | 975 | 2.3 | 2.4 | 2.5 | 2.6 | 2.6 | 2.7 |
| | 1000 | 2.2 | 2.3 | 2.4 | 2.4 | 2.5 | 2.6 |
| | 1025 | 2.1 | 2.2 | 2.2 | 2.3 | 2.4 | 2.5 |
| | 1050 | 2.0 | 2.1 | 2.1 | 2.2 | 2.3 | 2.3 |
| | 1075 | 1.9 | 2.0 | 2.0 | 2.1 | 2.2 | 2.2 |
| | 1100 | 1.8 | 1.9 | 1.9 | 2.0 | 2.1 | 2.1 |
| 2001 (611) to 3000 (914) | 800 | 2.9 | 3.0 | 3.1 | 3.1 | 3.1 | 3.1 |
| | 825 | 2.8 | 2.9 | 3.0 | 3.0 | 3.1 | 3.1 |
| | 850 | 2.6 | 2.7 | 2.8 | 2.9 | 3.0 | 3.1 |
| | 875 | 2.5 | 2.5 | 2.6 | 2.7 | 2.8 | 2.9 |
| | 900 | 2.3 | 2.4 | 2.5 | 2.6 | 2.6 | 2.7 |
| | 925 | 2.2 | 2.3 | 2.3 | 2.4 | 2.5 | 2.6 |
| | 950 | 2.1 | 2.2 | 2.2 | 2.3 | 2.4 | 2.4 |
| | 975 | 2.0 | 2.0 | 2.1 | 2.2 | 2.3 | 2.3 |
| | 1000 | 1.9 | 1.9 | 2.0 | 2.1 | 2.1 | 2.2 |
| 3001 (915) to 4000 (1219) | 775 | 2.9 | 3.0 | 3.1 | 3.1 | 3.1 | 3.1 |
| | 800 | 2.7 | 2.8 | 2.9 | 3.0 | 3.1 | 3.1 |
| | 825 | 2.6 | 2.6 | 2.7 | 2.8 | 2.9 | 3.0 |
| | 850 | 2.4 | 2.5 | 2.6 | 2.7 | 2.7 | 2.8 |
| | 875 | 2.3 | 2.3 | 2.4 | 2.5 | 2.6 | 2.7 |
| | 900 | 2.1 | 2.2 | 2.3 | 2.4 | 2.4 | 2.5 |
| | 925 | 2.0 | 2.1 | 2.2 | 2.2 | 2.3 | 2.4 |
| | 950 | 1.9 | 2.0 | 2.1 | 2.1 | 2.2 | 2.3 |
| | 975 | 1.8 | 1.9 | 2.0 | 2.0 | 2.1 | 2.1 |
| | 1000 | 1.8 | 1.8 | 1.9 | 1.9 | 2.0 | 2.0 |
| 4001 (1220) to 5000 (1524) | 750 | 2.8 | 2.9 | 3.0 | 3.1 | 3.1 | 3.1 |
| | 775 | 2.7 | 2.8 | 2.9 | 2.9 | 3.0 | 3.1 |
| | 800 | 2.5 | 2.6 | 2.7 | 2.8 | 2.8 | 2.9 |
| | 825 | 2.4 | 2.4 | 2.5 | 2.6 | 2.7 | 2.8 |
| | 850 | 2.2 | 2.3 | 2.4 | 2.4 | 2.5 | 2.6 |
| | 875 | 2.1 | 2.2 | 2.2 | 2.3 | 2.4 | 2.5 |
| | 900 | 2.0 | 2.0 | 2.1 | 2.2 | 2.3 | 2.3 |
| | 925 | 1.9 | 1.9 | 2.0 | 2.1 | 2.1 | 2.2 |
| | 950 | 1.8 | 1.8 | 1.9 | 2.0 | 2.0 | 2.1 |
| | 975 | 1.8 | 1.8 | 1.8 | 1.9 | 1.9 | 2.0 |
| | 1000 | 1.8 | 1.8 | 1.8 | 1.8 | 1.8 | 1.9 |
| 5001 (1525) to 5400 (1646) | 725 | 2.8 | 2.9 | 3.0 | 3.1 | 3.1 | 3.1 |
| | 750 | 2.7 | 2.8 | 2.8 | 2.9 | 3.0 | 3.1 |
| | 775 | 2.5 | 2.6 | 2.7 | 2.7 | 2.8 | 2.9 |
| | 800 | 2.3 | 2.4 | 2.5 | 2.6 | 2.7 | 2.7 |
| | 825 | 2.2 | 2.3 | 2.3 | 2.4 | 2.5 | 2.6 |
| | 850 | 2.1 | 2.1 | 2.2 | 2.3 | 2.4 | 2.4 |
| | 875 | 2.0 | 2.0 | 2.1 | 2.2 | 2.2 | 2.3 |
| | 900 | 1.8 | 1.9 | 2.0 | 2.0 | 2.1 | 2.2 |
| | 925 | 1.8 | 1.8 | 1.9 | 1.9 | 2.0 | 2.0 |
| | 950 | 1.8 | 1.8 | 1.8 | 1.8 | 1.9 | 1.9 |
| | 975 | 1.8 | 1.8 | 1.8 | 1.8 | 1.8 | 1.8 |
| | 1000 | 1.8 | 1.8 | 1.8 | 1.8 | 1.8 | 1.8 |

## SERVICE AND MAINTENANCE PROCEDURES

Untrained personnel can perform basic maintenance functions such as cleaning and replacing air filters. All other operations must be performed by trained service personnel. A qualified service person should inspect the furnace once a year.

### General

These instructions are written as if the furnace is installed in an upflow application. An upflow furnace application is where the blower is located below the combustion and controls section of the furnace, and conditioned air is discharged upward. Since this furnace can be installed in any of the 3 positions (Fig. 4), you must revise your orientation to component location accordingly.

**⚠ WARNING**

**FIRE, INJURY OR DEATH HAZARD**

Failure to follow this warning could result in personal injury, death and/or property damage.

The ability to properly perform maintenance on this equipment requires certain knowledge, mechanical skills, tools, and equipment. If you do not possess these, do not attempt to perform any service and maintenance on this equipment other than those procedures recommended in the Owner's Manual.

**⚠ CAUTION**

**ENVIRONMENTAL HAZARD**

Failure to follow this caution may result in environmental pollution.

Remove and recycle all components or materials (i.e. oil, refrigerant, control board, etc.) before unit final disposal.

**⚠ WARNING**

**ELECTRICAL SHOCK, FIRE OR EXPLOSION HAZARD**

Failure to follow this warning could result in personal injury or death, or property damage.

Before installing, modifying, or servicing system, main electrical disconnect switch must be in the OFF position and install a lockout tag. There may be more than one disconnect switch. Lock out and tag switch with a suitable warning label. Verify proper operation after servicing. Always reinstall access doors after completing service and maintenance.

**⚠ CAUTION**

**ELECTRICAL OPERATION HAZARD**

Failure to follow this caution may result in improper furnace operation or failure of furnace.

Label all wires prior to disconnection when servicing controls. Wiring errors can cause improper and dangerous operation.

**⚠ CAUTION**

**ENVIRONMENTAL HAZARD**

Failure to follow this caution may result in environmental pollution.

Remove and recycle all components or materials (i.e. oil, refrigerant, control board, etc.) before unit final disposal.

## Electrical Controls and Wiring

**⚠ WARNING**

**ELECTRICAL OPERATION HAZARD**

Failure to follow this warning could result in personal injury or death.

There may be more than one electrical supply to the furnace. Check accessories and cooling unit for additional electrical supplies that must be shut off during furnace servicing. Lock out and tag switch with a suitable warning label.

The electrical ground and polarity for 115-v wiring must be properly maintained. See field wiring information (Fig. 40) and for furnace wiring information (Fig. 67).

**NOTE**: If the polarity is not correct, the STATUS LED on the control will flash rapidly RED and prevent the furnace from heating. The control system also requires an earth ground for proper operation of the control and flame-sensing electrode.

The 24-v circuit contains an automotive-type, 3-amp. fuse located on the control. (Fig. 67) Any shorts of the 24-v wiring during installation, service, or maintenance will cause this fuse to blow. If fuse replacement is required, use ONLY a 3-amp. fuse. The control LED will display a three flash AMBER code when fuse needs to be replaced.

Proper instrumentation is required to service electrical controls. The control in this furnace is equipped with a multi-colored Status Code LED (Light-Emitting Diode) to aid in installation, servicing, and troubleshooting. The furnace control LED is either ON continuously, rapid flashing, or displaying a flash code in one of three colors (Red, Green, or Amber).

For an explanation of status codes, refer to service booklet located on blower access door (Fig. 63), or the Service guide at the end of this manual.

The stored status code will not be erased from the control memory, if 115- or 24-v power is interrupted.

1. To retrieve status code, proceed with the following:

**NOTE**: NO thermostat signal may be present at control, and all blower-OFF delays must be completed.

   a. Remove blower access door.
   b. Close blower door interlock switch.
   c. Depress and hold SW1 button once (for less than 5 seconds).

2. When above items have been completed, the LED flashes the fault code history (up to 5 fault codes from newest to oldest). Record the status code(s) for further troubleshooting.
3. Check LED status. If no previous faults in the history, control will rapidly flash the LED GREEN.

**SERVICE**

**LED CODES - STATUS**

| | |
|---|---|
| CONTINUOUS OFF | – No 24 VAC Power to Control. |
| FLASHING (RED, AMBER, GREEN) | – Power-up verification of LED. |
| CONTINUOUS ON (RED) | – Control Fault Detected Hard Lockout. Continuous Reset. Cycle Power 30 seconds. |
| CONTINUOUS ON (GREEN) | – Standby, Normal Operation, No Thermostat Requests. |
| RAPID FLASHING (RED) | – Line voltage (115VAC) polarity reversed. |
| RAPID FLASHING (GREEN) | – Error history was successfully cleared. |

**FAULT RECALL AND CLEARING**

**FAULT CODE RECALL (UP TO LAST 5)**
The control must be powered and the thermostat satisfied (no call for heat or cool). Depress and release the SW1 button once (less than 5 seconds); LED will flash the Fault Code History (up to 5 fault codes from newest to oldest).

**FAULT CODE CLEAR**
The control must be powered and the thermostat satisfied (no call for heat or cool). Depress and hold the SW1 button for at least 5 seconds (but not more than 10 seconds), until the LED flashes green, then release. The fault code history will be erased.

EACH OF THE FOLLOWING STATUS CODES IS A SERIES OF FLASHES OF A SPECIFIC COLOR LED

**LED ACTIVITY**

| | |
|---|---|
| 1 FLASH (RED) | – System Lockout: Retries Exceeded, 1 Lock Out. Retries are defined as failed ignition attempts, i.e. no flame sense during the trial for ignition period. Recycles are defined as loss of flame after flame has been established during the trial for ignition period, and there is no limit to the number of recycles. Check for: No gas or gas valve OFF; Flame sense or igniter that has become broken, disconnected, or shorted; Air leaking at interface between burner box and igniter, flame sensor, or main gasket. |
| 2 FLASHES (RED) | – Pressure Sensor Null Error: Inconsistent reading with inducer off, 5 second lockout, Unlimited Retries. Control waits 5 seconds after CFH (Call For Heat) before displaying fault. Fault is displayed until fault condition corrects or CFH is removed. Check for: Obstructed pressure tube or vent pipe; Properly connected transducer plug; Jammed/blocked inducer wheel. |
| 3 FLASHES (RED) | – Pressure Sensor Span Error: Inconsistent reading with inducer on, 5 minute lockout, Unlimited Retries. Span test maximum duration is 90 seconds. Once the Span test fails, the control continues to attempt to start furnace and fault is displayed until fault condition corrects or CFH is removed. Check for: Non-operational inducer; Blocked/leaking transducer tube; blocked vent pipe; Minimum pressure not being reached. |
| 4 FLASHES (RED) | – High Limit Switch Circuit Open: 3 hour lockout. When an open limit is detected, the control energizes the blower at cooling speed and the inducer at the RUN setting - no CFH required. Once the limit closes and the CFH is present, the furnace returns to normal operation. Main limit, Draft Safeguard, Burner Thermal Switch are all in the High Limit Circuit. Check for: Obstructed flue pipe; Blower airside restrictions (dirty/broken filter); Obstructed/restricted burner box inlet. |
| 5 FLASHES (RED) | – Flame Present with Gas Valve OFF. When detected, the control energizes the inducer at the "Run" setting, energize the blower on Heat speed, and displays fault - no CFH required. Control continues normal operation when fault condition is corrected. Check for: Leaking gas valve. Shorted flame sensor to ground will NOT cause this fault to occur. |
| 6 FLASHES (RED) | – Lockout occurs if the condensate drain float switch is open. Inducer runs at maximum speed. main blower runs at selected cooling speed. Furnace control will auto-reset in 3 hours or when fault condition is corrected. Cycle 115 VAC power to clear fault code. Check for: Blocked condensate drain or open float switch. |
| 7 FLASHES (RED) | – Gas Valve Circuit Shorted: 5 Minute Lockout. Voltage sensed at the gas valve terminal with the gas valve relay in the de-energized state. The inducer is energized to maximum speed. |

**LED CODES - STATUS**

| | |
|---|---|
| 1 FLASH (AMBER) | – Low Flame Sense. Flame Sense Current is below the weak flame threshold [3.0 µAmp]. A poor or no ground can cause this fault as well as a dirty or corroded sensor. |
| 2 FLASHES (AMBER) | – ID Plug Failure. Operation continues after fault correction. Wrong values for the specific board. Includes damaged ID plug, ID plug missing, etc. |
| 3 FLASHES (AMBER) | – Control Fuse Open: Operation continues after fault correction. |
| 1 FLASH (GREEN) | – Call for Heating. "W" or "W & G". |
| 2 FLASHES (GREEN) | – Call for Cooling. "Y" or "Y & G". |
| 3 FLASHES (GREEN) | – Continuous Fan Operation. "G" only. |

**COMPONENT TEST**

The control must be powered and the thermostat satisfied (no call for heat or cool). Depress and hold the SW1 button for at least 10 seconds (but not more than 15 seconds), until the LED flashes amber, then release. The control will execute the following functions:

1) Inducer On – "Run" setting will be activated throughout the test
2) Hot Surface Igniter – On for 15 seconds
3) Blower On – "Fan" Speed 15 seconds
4) Blower On – "Heat" Speed 15 seconds
5) Blower On – "Cool" Speed 15 seconds
6) Inducer and Blower Off
7) Return to standby mode

Once the COMPONENT TEST mode is initiated, all thermostat inputs will be ignored until the test sequence is completed. If the SW1 button is held for more than 15 seconds, the button press will be ignored and the LED display will return to its prior state.

A190255

**Fig. 63 - Service Label Information**

### Component Self-Test

The control must be powered and the thermostat satisfied (no call for heat or cool). Depress and hold the SW1 button for at least 10 seconds (but not more than 15 seconds), until the LED is blinking in AMBER, then release. The control will execute the following functions:

1. Inducer – "Run" setting throughout the test
2. Hot Surface igniter – On 15 seconds
3. Blower – "Fan" Speed 15 seconds
4. Blower – "Heat" Speed 15 seconds
5. Blower – "Cool" Speed 15 seconds
6. Inducer Off
7. Return to Standby mode.

Once the Field Test Mode is initiated, all thermostat inputs will be ignored until the field test sequence is completed. If the SW1 button is held for more than 15 seconds, the button press will be ignored and the LED display will return to its prior state.

### Troubleshooting

Refer to the service booklet. (Fig. 63)

### Care and Maintenance

**⚠ WARNING**

**FIRE OR EXPLOSION HAZARD**

Failure to follow this warning could result in personal injury, death and/or property damage.

Never store flammable or combustible materials on, near, or in contact with the furnace, such as:

1. Spray or aerosol cans, rags, brooms, dust mops, vacuum cleaners, or other cleaning tools.
2. Soap powders, bleaches, waxes or other cleaning compounds, plastic or plastic containers, gasoline, kerosene, cigarette lighter fluid, dry cleaning fluids, or other volatile fluids.
3. Paint thinners and other painting compounds, paper bags, or other paper products. Exposure to these materials could lead to corrosion of the heat exchangers.

For continuing high performance and to minimize possible furnace failure, periodic maintenance must be performed on this furnace. Consult your local dealer and Owner's Manual about proper frequency of maintenance and the availability of a maintenance contract.

**⚠ WARNING**

**ELECTRICAL SHOCK AND FIRE HAZARD**

Failure to follow this warning could result in personal injury, death, and/or property damage.

Turn off the gas and electrical supplies to the furnace and install lockout tag before performing any maintenance or service. Follow the operating instructions on the label attached to the furnace.

**⚠ WARNING**

**CARBON MONOXIDE POISONING AND FIRE HAZARD**

Failure to follow this warning could result in personal injury, death and/or property damage.

Never operate furnace without a filter or filtration device installed. Never operate a furnace with filter or filtration device access doors removed.

**⚠ CAUTION**

**CUT HAZARD**

Failure to follow this caution may result in personal injury.

Sheet metal parts may have sharp edges or burrs. Use care and wear appropriate protective clothing, safety glasses and gloves when handling parts, and servicing furnaces.

The minimum maintenance on this furnace is as follows:

1. Check and clean air filter each month or more frequently if required. Replace if torn.
2. Check blower motor and wheel for cleanliness each heating and cooling season. Clean as necessary.
3. Check electrical connections for tightness and controls for proper operation each heating season. Service as necessary.
4. Inspect the vent pipe/vent system before each heating season for water leakage, sagging pipes or broken fittings. Have vent pipes/vent system serviced by a qualified service agency.
5. Inspect any accessories attached to the furnace such as a humidifier or electronic air cleaner. Perform any service or maintenance to the accessories as recommended in the accessory instructions.

### Cleaning and/or Replacing Air Filter

The air filter type may vary depending on the application or orientation. The filter is external to the furnace casing. There are no provisions for an internal filter with this furnace. See "Filter Arrangement" under the "Installation" section of this manual.

**NOTE:** If the filter has an airflow direction arrow, the arrow must point toward the blower.

To clean or replace filters, proceed as follows:

**⚠ WARNING**

**ELECTRICAL SHOCK, FIRE OR EXPLOSION HAZARD**

Failure to follow this warning could result in personal injury or death, or property damage.

Before installing, modifying, or servicing system, main electrical disconnect switch must be in the OFF position and install a lockout tag. There may be more than one disconnect switch. Lock out and tag switch with a suitable warning label. Verify proper operation after servicing. Always reinstall access doors after completing service and maintenance.

1. Turn off electrical supply to furnace.
2. Remove filter cabinet door.
3. Slide filter out of cabinet.
4. If equipped with permanent, washable filter, clean filter by spraying cold tap water through filter in opposite direction of airflow. Rinse filter and let dry. Oiling or coating of the filter is not recommended.
5. If equipped with factory specified disposable media filter, replace only with a factory specified media filter of the same size.
6. Slide filter into cabinet.
7. Replace filter cabinet door.
8. Turn on electrical supply to furnace.

### Blower Motor and Wheel Maintenance

**⚠ WARNING**

**ELECTRICAL SHOCK HAZARD**

Failure to follow this warning could result in personal injury or death.

Blower access door switch opens 115-v power to control. No component operation can occur unless switch is closed. Caution must be taken when manually closing this switch for service purposes.

**NOTE**: The blower wheel should not be dropped or bent as balance will be affected. The following steps should be performed by a qualified service agency.

To ensure long life and high efficiency, clean accumulated dirt and grease from blower wheel and motor annually.

The inducer and blower motors are pre-lubricated and require no additional lubrication.

Clean blower motor and wheel as follows:

1. Turn off electrical supply to furnace.
2. Remove blower door.
3. All factory wires can be left connected, but field thermostat connections may need to be disconnected depending on their length and routing.
4. Remove two screws holding blower assembly to blower deck and slide blower assembly out of furnace.
5. Clean blower wheel and motor using a vacuum with soft brush attachment. Blower wheel blades may be cleaned with a small paint or flux brush. Do not remove or disturb balance weights (clips) on blower wheel blades.
6. Vacuum any loose dust from blower housing, wheel and motor.
7. If a greasy residue is present on blower wheel, remove wheel from the blower housing and wash it with an appropriate degreaser. To remove wheel:

**NOTE**: Before disassembly, mark blower motor, and blower housing so motor and each arm is positioned at the same location during reassembly.

   a. Disconnect ground wire attached to blower housing.
   b. Remove screws securing cutoff plate and remove cutoff plate from housing.
   c. Loosen set screw holding blower wheel on motor shaft (160+/-20 in.-lb. when reassembling).
   d. Remove bolts holding motor to blower housing and slide motor out of wheel (40+/-10 in.-lb. when reassembling).
   e. Remove blower wheel from housing.
   f. Clean wheel and housing.

8. Reassemble motor and blower by reversing steps 7.d. finishing with 7.a. Be sure to reattach ground wire to the blower housing.
9. Verify that blower wheel is centered in blower housing and set screw contacts the flat portion of the motor shaft. Loosen set screw on blower wheel and reposition if necessary.
10. Spin the blower wheel by hand to verify that the wheel does not rub on the housing.
11. Reinstall blower assembly in furnace.
12. Reinstall two screws securing blower assembly to blower deck.

**⚠ CAUTION**

**UNIT DAMAGE HAZARD**

Failure to follow this caution may result in shortened heat exchanger life.

Heating fan speed(s) MUST be adjusted to provide proper air temperature rise as specified on the rating plate. Recommended operation is at the midpoint of the rise range or slightly above. Refer to "SET TEMPERATURE RISE" under START-UP, ADJUSTMENT, and SAFETY CHECK.

**NOTE**: Refer to motor speed lead relocation if leads were not identified before disconnection (Table 11).

13. Refer to furnace wiring diagram, and connect thermostat leads if previously disconnected.
14. To check blower for proper rotation:
    a. Turn on electrical supply.

**⚠ WARNING**

**ELECTRICAL SHOCK HAZARD**

Failure to follow this warning could result in personal injury, or death.

Blower access door switch opens 115-v power to furnace control. No component operation can occur unless switch is closed. Exercise caution to avoid electrical shock from exposed electrical components when manually closing this switch for service purposes.

    b. Manually close blower access door switch.
    c. Verify blower is rotating in the correct direction.
15. If furnace is operating properly, RELEASE BLOWER ACCESS DOOR SWITCH. Remove any jumpers or reconnect any disconnected thermostat leads.
16. Replace blower access door.
17. Cycle furnace through one complete heating and cooling cycle. Verify the furnace temperature rise as shown in "Adjustments" Section. Adjust temperature rise as shown in "Adjustments" Section. If outdoor temperature is below 70°F, (21°C) turn off circuit breaker to outdoor unit before running furnace in the cooling cycle. Turn outdoor circuit breaker on after completing cooling cycle.

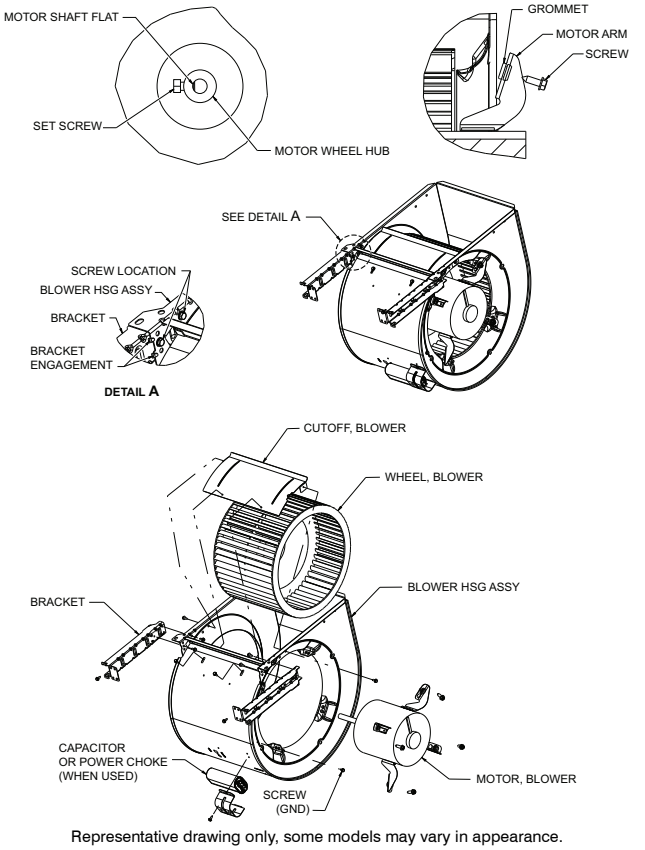


**Fig. 64 - Blower Assembly**

## ⚠ WARNING

**ELECTRICAL OPERATION HAZARD**

Failure to follow this warning could result in personal injury or death.

Blower door switch opens 115-v power to control. No component operation can occur unless switch is closed. Caution must be taken when manually closing this switch for service purposes.

### Cleaning Flame Sensor

The following items must be performed by a qualified service technician. If the Flame Sensor develops an accumulation of light dirt or dust, it may be cleaned by using the following procedure:

## ⚠ WARNING

**ELECTRICAL SHOCK AND FIRE HAZARD**

Failure to follow this warning could result in personal injury, death, and/or property damage.

Turn off the gas and electrical supplies to the furnace and install lockout tag before performing any maintenance or service. Follow the operating instructions on the label attached to the furnace.

## ⚠ WARNING

**FIRE OR EXPLOSION HAZARD**

Failure to follow this warning could result in personal injury, death, and/or property damage.

When servicing the flame sensor, only use the factory-provided 1/4-in. length screws. Use of alternate screws will damage unit components.

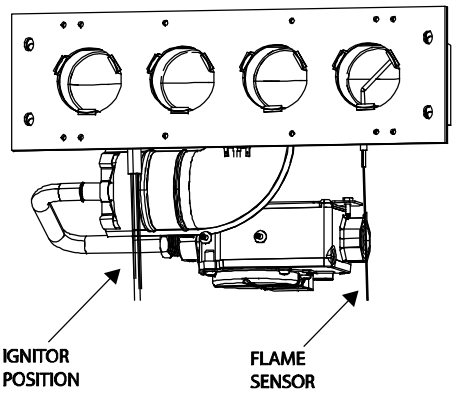


**Fig. 65 - Igniter Position - Back View**

1. Disconnect power at external disconnect, fuse or circuit breaker.
2. Turn off gas at external shut-off or gas meter.
3. Remove control door and set aside.
4. Turn electric switch on gas valve to OFF.
5. Disconnect Flame Sensor wire from Flame Sensor.
6. Remove the flame sensor burner assembly.
   a. Using a 1/4-in. driver, remove the screw securing the flame sensor to the burner assembly (Fig. 65). Retain factory-provided 1/4-in. screws.
   b. Carefully withdraw the flame sensor from the burner assembly without striking the sensor on surrounding parts.
   c. Inspect flame sensor for signs of damage or failure.
   d. Clean the flame sensor with fine steel wool (0000 grade). Do not use sand paper or emery cloth.
   e. If replacement is required, remove the screw that secures the flame sensor on the bracket and remove the flame sensor.
7. To replace flame sensor and bracket assembly, reverse items 6.a. through 6.d.
8. Reconnect flame sensor wire to the wire harness, dressing the sensor wires to ensure there is no tension on the flame sensor itself (Fig. 65).

## ⚠ WARNING

**FIRE OR EXPLOSION HAZARD**

Failure to follow this warning could result in personal injury, death, and/or property damage.

Never purge a gas line into a combustion chamber. Never test for gas leaks with an open flame. Use a commercially available soap solution made specifically for the detection of leaks to check all connections. A fire or explosion may result causing property damage, personal injury or loss of life.

9. Turn gas on at electric switch on gas valve and at external shut-off or meter

10. Turn power on at external disconnect, fuse or circuit breaker.
11. Run the furnace through two complete heating cycles to check for proper operation
12. Install control door when complete.

### Servicing Hot Surface Igniter

**⚠ WARNING**

**FIRE OR EXPLOSION HAZARD**

Failure to follow this warning could result in personal injury, death, and/or property damage.

When servicing the flame sensor, only use the factory-provided 1/4-in. length screws. Use of alternate screws will damage unit components.

The igniter does **NOT** require annual inspection. Check igniter resistance before removal (Fig. 65).

1. Turn off gas and electrical supplies to furnace.
2. Remove control door.
3. Disconnect igniter wire connection.
4. Check igniter resistance. Igniter resistance is affected by temperature. Only check resistance when the igniter is at room temperature.
   a. Using an ohm meter, check resistance across both igniter leads in connector.
   b. Cold reading should be between 40 ohms and 70 ohms.
5. Remove igniter assembly.
   a. Using a 1/4-in. driver, remove the two screws securing the igniter mounting bracket to the burner assembly (Fig. 65). Retain 1/4-in. length screws.
   b. Carefully withdraw the igniter and bracket assembly through the burner assembly without striking the igniter on surrounding parts.
   c. Inspect igniter for signs of damage or failure.
   d. Inspect the igniter gasket. If damaged or missing, replace gasket before reinstalling.
6. To replace igniter and bracket assembly, reverse items 5.a. through 5.d.
7. Reconnect igniter harness to the igniter, dressing the igniter wires to ensure there is no tension on the igniter itself (Fig. 65).
8. Turn on gas and electrical supplies to furnace.
9. Verify igniter operation by initiating control board self-test feature. Run the furnace through two complete heating cycles to check for proper operation.
10. Replace control door.

### Flushing Collector Box and Drainage System

**⚠ WARNING**

**ELECTRICAL SHOCK AND FIRE HAZARD**

Failure to follow this warning could result in personal injury, death, and/or property damage.

Turn off the gas and electrical supplies to the furnace and install lockout tag before performing any maintenance or service. Follow the operating instructions on the label attached to the furnace.

1. Turn off gas and electrical supplies to furnace.
2. Remove control door.
3. Disconnect pressure transducer tube from pressure transducer port.

**NOTE:** Ensure the pressure transducer tube disconnected from the pressure transducer is higher than the collector box opening or water will flow out of tube.

4. Remove the collector box plug from the top port on the upper corner of the collector box (Fig. 59).
5. Attach a funnel with a flexible tube to port on the collector box.
6. Flush inside of collector box with water until discharge water from condensate trap is clean and runs freely.
7. Repeat steps 4 thru 6 with middle plug on upper corner of collector box.
8. Remove the pressure transducer tube from the collector box.

**NOTE**: Do **NOT** blow into tube with tube connected to the pressure transducer.

9. Clean pressure transducer port on collect box with a small wire. Shake any water out of pressure transducer tube.
10. Reconnect tube to pressure transducer and pressure transducer port.
11. Remove the relief tube from the port on the collector box and the trap.
12. Clean the relief port on collector box and the trap with a small wire. Shake any water out of the tube.
13. Reconnect relief tube to trap and collector box ports.

### Cleaning Condensate Drain and Trap

**NOTE**: If the condensate trap is removed, a new gasket between the trap and collector box is required. Verify a condensate trap gasket is included in the service kit or obtain one from your local distributor.

1. Reverse installation instructions found in Condensate Trap Section to disassemble the condensate trap.
2. Use water or a slight brush to clean components. Do NOT cut into glued PVC sections to service the trap.
3. Ensure all instructions, cautions, and warning from Condensate Trap Section are followed when reassembling condensate trap.

### Checking Heat Tape Operation (If Applicable)

In applications where the ambient temperature around the furnace is 32°F or lower, freeze protection measures are required. If this application is one where heat tape has been applied, check to ensure it will operate when low temperatures are present.

**NOTE:** The Heat Tape, when used, should be wrapped around the condensate drain trap. There is no need to use heat tape within the furnace casing. Most heat tapes are temperature activated, and it is not practical to verify the actual heating of the tape. Check the following:

1. Check for signs of physical damage to heat tape such as nicks, cuts, abrasions, gnawing by animals, etc.
2. Check for discolored heat tape insulation. If any damage or discolored insulation is evident, replace heat tape.
3. Check that heat tape power supply circuit is on.

## Cleaning Heat Exchangers

The following items must be performed by a qualified service technician.

### Primary Heat Exchangers

**IMPORTANT**: It is not recommended to clean the heat exchanger as part of annual maintenance.

If there is reason to believe that primary heat exchanger is obstructed and cleaning is needed, remove burner assembly to access heat exchanger and follow steps below.

Once burner assembly is removed, gasket of the burner box MUST be replaced with a new gasket.

**NOTE:** If the heat exchangers get a heavy accumulation of soot and carbon, both the primary and secondary heat exchangers should be replaced rather than trying to clean them thoroughly due to their intricate design. A build-up of soot and carbon indicates that a problem exists which needs to be corrected, such as improper

adjustment of manifold pressure, insufficient or poor quality combustion air, improper vent termination, incorrect size or damaged manifold orifice(s), improper gas, or a restricted heat exchanger (primary or secondary). Action must be taken to correct the problem.

**NOTE:** Proper use of Personal Protective Equipment (PPE) must be followed, including safety glasses, gloves, and dust mask when removing and reinstalling the heat exchanger insulation assembly.

1. Turn off gas and electrical supplies to furnace.

**⚠ WARNING**

**ELECTRICAL SHOCK, FIRE OR EXPLOSION HAZARD**

Failure to follow this warning could result in personal injury or death, or property damage.

Before installing, modifying, or servicing system, main electrical disconnect switch must be in the OFF position and install a lockout tag. There may be more than one disconnect switch. Lock out and tag switch with a suitable warning label. Verify proper operation after servicing. Always reinstall access doors after completing service and maintenance.

**⚠ WARNING**

**ELECTRICAL SHOCK AND FIRE HAZARD**

Failure to follow this warning could result in personal injury, death, and/or property damage.

Turn off the gas and electrical supplies to the furnace and install lockout tag before performing any maintenance or service. Follow the operating instructions on the label attached to the furnace.

2. Remove control door.
3. Disconnect wires or connectors to burner thermal switch, gas valve, igniter, and flame sensor.
4. Using backup wrench, disconnect gas supply pipe from furnace gas control valve.
5. Remove screws attaching burner assembly to cell panel.

**NOTE:** Burner, manifold, gas valve, and orifice should be removed as one assembly.

6. Carefully remove burner insulation assembly, Insulation MUST be replaced before reassembly.
7. Clean heat exchanger openings with a vacuum and a soft brush (Fig. 66).

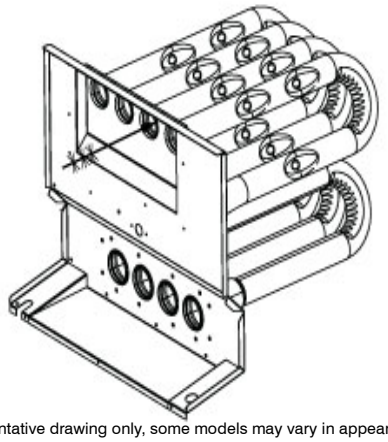

Representative drawing only, some models may vary in appearance.

A190291

**Fig. 66 - Cleaning Heat Exchanger Cell**

**NOTE**: After cleaning, inspect the heat exchangers to ensure they are free of all foreign objects that may restrict flow of combustion products.

8. Reverse items 6. through 1. for reassembly. Torque burner screws to 45 inch-pound to ensure a tight burner seal.
9. Refer to furnace wiring diagram and reconnect wires to burner thermal switch, gas valve, igniter, and flame sensor.
10. Turn on gas and electrical supplies to furnace.
11. Check furnace operation through two complete heat operating cycles.
12. Check for gas leaks.

**⚠ WARNING**

**FIRE OR EXPLOSION HAZARD**

Failure to follow this warning could result in personal injury, death, and/or property damage.

Never purge a gas line into a combustion chamber. Never test for gas leaks with an open flame. Use a commercially available soap solution made specifically for the detection of leaks to check all connections. A fire or explosion may result causing property damage, personal injury or loss of life.

13. Replace main furnace door.

### Secondary Heat Exchangers

The condensing side (inside) of the secondary heat exchanger CANNOT be serviced or inspected without complete removal of the heat exchanger assembly. Detailed information on heat exchanger removal can be obtained from your Distributor.

## WINTERIZATION

**⚠ CAUTION**

**UNIT AND PROPERTY DAMAGE HAZARD**

Failure to follow this caution may result in unit component or property damage.

If the furnace is installed in an unconditioned space where the ambient temperatures may be 32° F (0° C) or lower, freeze protection measures must be taken to prevent minor property or product damage.

Since the furnace uses a condensing heat exchanger, some water will accumulate in the unit as a result of the heat transfer process. Therefore, once it has been operated, it cannot be turned off and left off for an extended period of time when temperatures will reach 32°F (0°C) or lower unless winterized. Follow these procedures to winterize your furnace:

**⚠ CAUTION**

**UNIT COMPONENT DAMAGE HAZARD**

Failure to follow this caution may result in damage to the furnace and other property damage.

Do not use ethylene glycol (automotive antifreeze coolant or equivalent). Failure of plastic components may occur.

1. Obtain propylene glycol (RV/swimming pool antifreeze or equivalent).
2. Turn off gas and electrical supplies to your furnace.
3. Remove furnace control door.

4. Remove the top unused rubber plug from the port on the collector box opposite the condensate trap.
5. Connect a field supplied 3/8-in. (9.5-mm) ID tube to the open port on the collector box.
6. Insert a field supplied funnel into the tube.
7. Pour one quart (liter) of anti-freeze solution into the funnel/ tube. Antifreeze should run through the inducer housing, overfill condensate trap and flow to an open drain.
8. Replace the rubber plug in the port on the collector box.
9. Remove the middle unused rubber plug from the port on the collector box opposite the condensate trap.
10. Repeat Steps 5 through 8.
11. If a condensate pump is used, check with pump manufacturer to verify pump is safe for use with antifreeze used. Allow pump to start and pump anti-freeze to open drain.
12. Replace main door.
13. When furnace is re-started, flush condensate pump with clear water to check for proper operation before re-starting furnace.
14. Propylene glycol need not be removed before re-starting furnace.

**SEQUENCE OF OPERATION**

**NOTE**: Furnace control must be grounded for proper operation or control will lock out. Control is grounded through green/yellow wire routed to gas valve and gas valve mounting bracket screw.

Follow the sequence of operation through the different modes. Read and follow the wiring diagram very carefully.

The blower door must be installed for power to be conducted through the blower door interlock switch ILK to the furnace control CPU, transformer TRAN, inducer motor IDM, blower motor BLWM, hot-surface igniter HSI, and gas valve GV.

**Sequence of Operation - Heating**

1. **Call for Heat**
   A call for heat is intiated when a connection is observed between thermostat terminals "R" & "W".
   a. **Pressure Sensor Verification:**The control operates the inducer in a manner to verify the pressure sensor null value and span operation are within specification. If the system is operating correctly, this test takes only a few seconds. If the system is not functioning properly, the control times out after a maximum 90 seconds and displays the proper fault code.
   b. **Pre-purge:** The heating cycle begins with operation of the inducer at "Pre-purge" setting for the 30 seconds.
   c. **Igniter Warm-Up:** After the pre-purge timer expires, the control will set the inducer to the "Igniter Warm-Up" setting and energize the igniter for the Igniter Warm-up period of 17 seconds.

**NOTE**: Inducer motor shuts off during igniter warm up period and then comes back on for the ignition trial.

   d. **Trial for Ignition:** Once the igniter warm-up period has expired, the control sets the inducer to the "Trial for Ignition" setting and stabilizes the inducer speed to meet the target pressure. The gas valve is then energized allowing the flow of gas to the burner. The gas valve remains open for the Trial for Ignition interval.
   e. **Flame Sense:** While the gas valve is open, the control monitors the flame sense circuit to detect the presence of flame. If flame is not established during the Trial for Ignition period of 4 seconds, the control de-energizes the gas valve and operates the inducer for the Inter-purge period.
   f. **Flame Stabilization:** Once flame is established, the control will set the inducer to the "Flame Stabilization" setting and maintain the inducer operation at this setting for the duration of the Flame Stabilization timing of 10 seconds.
   g. **Blower On-Delay:** Once a successful ignition occurs, the control will wait for the Heat Blower On-Delay of 25 seconds (time begins when the gas valve is energized) and then energize the blower heating speed.
   h. **Heating Cycle Run:** After the Flame Stabilization period is completed, the control will continue to maintain the heating cycle with the inducer running at the "Run" setting until one of the following occurs:
      (1.) The call for heat is satisfied (the connection between "R" & "W" is removed).
      (2.) Flame sense is lost (flame out), in which case the control will initiate an inter-purge (45s) and recycle.
      (3.) A lockout condition exists, in which case the control terminates the heating call and waits for the error condition to resolve according to the programmed parameters.
   i. **Post-purge:** Once the burner cycle has terminated and loss of flame is verified, the control energizes the inducer at the "Post-purge" setting for 30s.
   j. **Inter-purge:** In the event of a failed trial for ignition, the control energizes the inducer at the "Post-purge" setting for the Inter-purge Timing 45s.
   k. **Blower Off-Delay:** Once the gas valve has been de-energized, the control continues to operate the blower on the HEAT speed for the duration of the Heat Blower Off-Delay timing. The Heat Blower Off-Delay is field-selectable (90, *120, 150, 180).

**NOTE**: *120 is default setting.

**OFF:** The controls returns to the stand-by mode until either a thermostat call is received or an error condition occurs.

**Sequence of Operation - Cooling**

1. **Call for Cool**
   A call for heat is intiated when a connection is observed between thermostat terminals "R" & "Y".
   a. **Blower On-Delay:** When the call for cool is initiated, the control will wait for the Cooling Blower On-Delay timing of 2 seconds, for both jumper settings.
   b. **Blower Off-Delay:** Once the connection between "R" and "Y" is removed, the control continues to operate the blower on the COOL speed for the duration of the Cool Blower Off-Delay timing (fixed 90 seconds).

**OFF:** The controls returns to the stand-by mode until either a thermostat call is received or an error condition occurs.

**Sequence of Operation - Fan Only**

1. **Operation:** Fan Only Mode is initiated when a connection is observed between thermostat terminals "R" & "G". The "G" terminal is ignored when there is either a call for heat or call for cool. When in the Fan Only Mode, the blower will be energized to run on Fan speed.

**Fault Code Recall**

1. **Function:** When the SW1 button is pressed momentarily, the control displays the last five (5) fault codes recorded in non-volatile memory upon demand.
2. **Operation:** The control must be powered and the thermostat satisfied (no call for heat or cool). Depress and release the SW1 button once (less than 5 seconds); the LED will flash the Fault Code History (up to 5 fault codes from newest to oldest)

**NOTE**: **Fault Code Display Means:** Multi-Color LED (Green, Amber, Red).

**Clear Fault Memory**

1. **Function:** When the SW1 button is pressed and held for an extended period (more than 5 seconds, less than 10 seconds), the control erases the stored fault code history.
2. **Operation:** The control must be powered and the thermostat satisfied (no call for heat or cool). Depress and hold the SW1 button for at least 5 seconds (but not more than 10 seconds), until the LED flashes a rapid Green, then release. The fault code history will be erased.

**Component Test**

1. **Function:** When the SW1 button is pressed and held for an extended period of time (more than 10 seconds, less than 15 seconds), the control will initiate a component self test.

2. **Operation:** The control must be powered and the thermostat satisfied (no call for heat or cool). Depress and hold the SW1 button for at least 10 seconds (but not more than 15 seconds), until the LED flashes Amber, then release. The control will execute the following functions:
   a. Inducer starts and runs throughout the entire test
   b. Hot surface igniter on for 15 seconds, then off
   c. Blower motor will be turned on at constant fan speed, heat speed, and cool speed for 15 seconds each.
   d. Control returns to standby mode.

**NOTE**: If SW1 button is held for longer than 15 seconds, the control will remain in standby mode

**Wiring Diagrams**

Refer to wiring diagram (Fig. 67).

**Troubleshooting**

Refer to the service label information (Fig. 63), wiring diagram (Fig. 67), and the Service Guide (Page 61) can be a useful tool in isolating furnace operation problems. The Guide will help to identify the problem or failed component. After replacing any component, verify correct operation sequence.

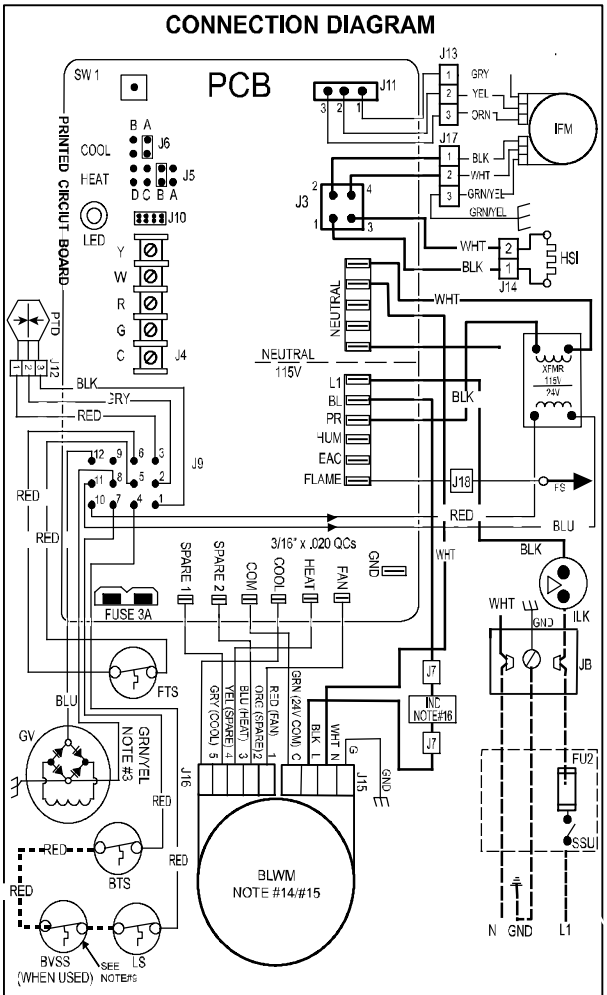


## NOTES:

| | |
|---|---|
| BL | L1 BLOWER POWER |
| BLWM | BLOWER MOTOR (ECM) |
| BTS | BURNER THERMAL SWITCH |
| CPU | MICROPROCESSOR AND CIRCUITRY |
| EAC | ELECTRONIC AIR CLEANER CONNECTION |
| FU2 | FUSE OR CIRCUIT BREAKER CURRENT INTERRUPT DEVICE(FIELD INSTALLED & SUPPLIED) |
| FS | FLAME SENSE |
| FTS | FLOAT SWITCH |
| GND | EQUIPMENT GROUND |
| GV | GAS VALVE-REDUNDANT |
| GVR | GAS VALVE RELAY, DPST-(N.O.) |
| HSI | HOT SURFACE IGNITER (115 VAC) |
| HSIR | HOT SURFACE IGNITER RELAY, SPST-(N.O.) |
| HUM | 115VAC HUMIDIFIER CONNECTION |
| IDM | INDUCED DRAFT MOTOR, ECM |
| ILK | BLOWER ACCESS PANEL INTERLOCK SWITCH, SPST-(N.O.) |
| J# | WIRE HARNESS CONNECTIONS |
| JB | JUNCTION BOX |
| J4 | 5-CIRCUIT TERMINAL BLOCK |
| J5 | HEAT OFF DELAY JUMPER |
| J6 | COOL OFF DELAY JUMPER |
| J7, J18 | 1-CIRCUIT CONNECTOR |
| J9 | 12-CIRCUIT CONNECTOR |
| J10 | MODEL PLUG CONNECTOR |
| J11, 12 | 3-CIRCUIT CONNECTOR |
| J13 | 3-CIRCUIT CONNECTOR |
| J14 | 2-CIRCUIT CONNECTOR |
| J15 | 4-CIRCUIT BLWM POWER CONNECTOR |
| J16 | 5-CIRCUIT BLWM SPEED TAP CONNECTOR |
| J17 | 3-CIRCUIT CONNECTOR |
| LS | LIMIT SWITCH, AUTO-RESET, SPST (N.C.) |
| LED | LIGHT-EMITTING DIODE FOR STATUS CODES-AMBER |
| PCB | PRINTED CIRCUIT BOARD CONTROL |
| PTD | PRESSURE TRANSDUCER |
| | TRANSFORMER 115V |
| PR | FAULT CODE RETRIEVAL / CLEAR |
| SW1 | PRESS < 5S TO RECALL CODES<br>PRESS > 5S AND < 10S TO CLEAR<br>PRESS > 10S TO < 15S TO TEST |
| SSU | SAFETY SWITCH (FIELD SUPPLIED) |

- JUNCTION
- UNMARKED TERMINAL
- PCB CONTROL TERMINAL
- FACTORY WIRING (115VAC)
- FACTORY WIRING (24VAC)
- FIELD WIRING (115VAC)
- FIELD WIRING (24VAC)
- CONDUCTOR ON CONTROL PCB
- FIELD WIRING SCREW TERMINAL
- FIELD EARTH GROUND
- EQUIPMENT GROUND
- FIELD SPLICE
- PLUG RECEPTACLE

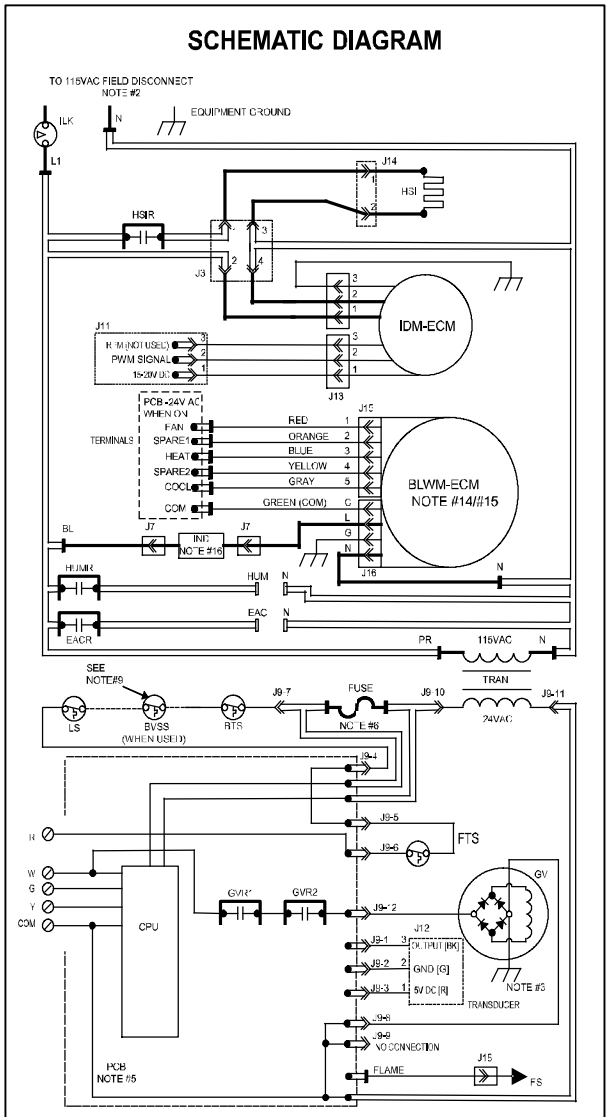


## NOTES:

1. If any of the original equipment wire is replaced use wire rated for 105°C.
2. Use only copper wire between the disconnect switch and the furnace junction box (JB).
3. This wire must be connected to furnace sheet metal for control to prove flame.
4. Symbols are electrical representation only.
5. Solid lines inside PCB are printed circuit board conductors and are not included in legend.
6. Replace only with a 3 amp fuse.
7. Inducer (IDM) motor contains internal auto-reset thermal overload switches (OL).
8. Blower motor speed selections are for average conditions, see installation instructions for details on optimum speed selection.
9. Factory connected when BVSS (Chimney Adapter Accessory Kit) is not installed.
10. Ignition-lockout will occur after four consecutive unsuccessful trials-for-ignition. Control will auto-reset after one hour.
11. Blower-on delay: gas heating 25 seconds, cooling or heat pump 2 seconds.
12. Blower-off delay: gas heating selections are 90, 120, 150 or 180 seconds, cooling or heat pump 90 seconds.
13. BLWM is locked - rotor overload protected by redundant electronic control circuits.
14. J15 and J16 not available on all motors. Blower motor (BLWM) leads may be hardwired at motor.
15. Some motors may use black instead of gray for COOL motor tap (Hi Speed).
16. Inductor not used on all models.

345157–2 REV C
A190254

**Fig. 67 - Wiring Diagram**

# SERVICE GUIDE

| LED CODES | STATUS |
|---|---|
| CONTINUOUS OFF | No 24 VAC Power to Control. |
| FLASHING (RED, AMBER, GREEN) | Power-up verification of LED. |
| CONTINUOUS ON (RED) | Control Fault Detected Hard Lockout. Continuous Reset. Cycle Power 30 seconds. |
| CONTINUOUS ON (GREEN) | Standby, Normal Operation, No Thermostat Requests. |
| RAPID FLASHING (RED) | Line voltage (115VAC) polarity reversed. |
| RAPID FLASHING (GREEN) | Error history was successfully cleared. |

**EACH OF THE FOLLOWING STATUS CODES IS A COMBINATION OF A SERIES OF FLASHES WITH A SPECIFIC COLOR LED**

## COMPONENT TEST

### LED ACTIVITY (CFH = Call for Heat)

**1 FLASH (RED)** System Lockout: Retries Exceeded, 1 Lock Out.. Retries are defined as failed ignition attempts, i.e. no flame sense during the trial for ignition period, and there is no limit to the number of recycles.
**Check for:** No gas or gas valve OFF, Flame sense or igniter that has become broken, disconnected, or shorted; Air leaking at interface between burner box and igniter, flame sensor, or main gasket.

**2 FLASHES (RED)** Pressure Sensor Null Error: Inconsistent reading with inducer off, 5 second lockout, Unlimited Retries. Control waits 5 seconds after CFH (Call for Heat) before displaying fault. Fault is displayed until fault condition corrects or CFH is removed.
**Check for:** Pressure Tube and Vent for restrictions), Transducer electrical/pressure connections, Inducer wheel and motor move freely. Ensure pressure tube not covering bleed port on transducer.

**3 FLASHES (RED)** Pressure Sensor Span Error: Inconsistent reading with inducer on, 5 minute lockout, Unlimited Retries. Span test maximum duration is 90 seconds. Once the span test fails, the control continues to attempt to start furnace and fault is displayed until fault condition corrects or CFH is removed.
**Check for:** Non-operational inducer; Blocked/leaking transducer tube; blocked vent pipe; Minimum pressure not being reached.

**4 FLASHES (RED)** High Limit Switch Circuit Open: 3 hour lockout. When an open limit is detected, the control energizes the blower at cooling speed and the iducer at the RUN setting- no CFH required. Once the limit closes and the CFH is present, the furnace returns to normal operation.
**Check for:** Obstructed flue pipe/ Blower airside restrictions (dirty/broken filter); Obstructed/restricted burner box inlet.

**5 FLASHES (RED)** Flame Present with Gas Valve OFF. When detected, the control energizes the inducer at the ”Run” setting, energize the blower on Heat speed, and displays fault - no CFH required. Control continues normal operation when fault condition is corrected.
**Check for:** Leaking gas valve. Shorted flame sensor to ground will **NOT** cause this fault to occur.

**6 FLASHES (RED)** Lockout occurs if the condensate drain float switch is open. Inducer runs at maximum speed, main blower runs at selected cooling speed. Furnace control will auto-reset in 3 hours or when fault condition is corrected. Cycle 115 VAC power to clear fault code.
**Check for:** Blower condensate drain or open float switch.

**7 FLASHES (RED)** Gas Valve Circuit Shorted: 5 Minute Lockout. Voltage sensed at the gas valve terminal with the gas valve relay in the de-energized state. The inducer is energized to maximum speed.

### LED ACTIVITY

**1 FLASH (AMBER)** Low Flame Sense. Flame Sense Current is below the weak flame threshold [3.0 $\mu$Amp]. A poor or no ground can cause this fault as well as a dirty or corroded sensor.

**2 FLASHES (AMBER)** ID Plug Failure: Operation continues after fault correction. Wrong values for the specific board. Includes damaged ID plug, ID plug missing, etc.

**3 FLASHES (AMBER)** Control Fuse Open: Operation continues after fault correction.

**1 FLASH (GREEN)** Call for Heating. ”W” or ”W & G”.
**2 FLASHES (GREEN)** Call for Cooling. ”Y” or ”Y & G”.
**3 FLASHES (GREEN)** Continuous Fan Operation. ”G” only.

### FAULT RECALL AND CLEARING

**Fault Code Recall (up to last 5)**

The control must be powered and the thermostat satisfied (no call for heat or cool). Depress and release the SW1 button once (less than 5 seconds); the LED will flash the Fault Code History (up to 5 fault codes from newest to oldest).

**Fault Code Clear**

The control must be powered and the thermostat satisfied (no call for heat or cool). Depress and hold the SW1 button for at least 5 seconds (but not more than 10 seconds), until the LED flashes a rapid green, then release. The fault code history will be erased.

# PARTS REPLACEMENT INFORMATION GUIDE

### Casing Group
Blower door
Bottom plate
Control door
Door knob assembly
Top filler plate

### Electrical Group
3-Amp fuse
Circuit board
Control box
Door switch
Junction box
Limit switch(es)
Transformer

### Blower Group
Blower housing
Blower motor
Blower wheel
Cut-off plate

### Filter Group
Filter(s)
Media Cabinet (when used)

### Gas Control Group
Burner
Flame sensor
Gas valve
Hot surface igniter
Manifold
Orifice

### Heat Exchanger Group
Containment plate
Coupling box
Heat exchanger assembly
Primary HX cell panel
Secondary HX assembly
Tubing gaskets

### Inducer Group
Collector box
Condensate trap
Condensate trap elbow
Gaskets
Condensate Trap Float Switch
Transducer
Inducer motor
Inducer wheel
Vent elbow assembly

**TO OBTAIN INFORMATION ON PARTS:** Consult your installing dealer or classified section of your local telephone directory under "Heating Equipment" or "Air Conditioning Contractors and Systems" headings for dealer listing by brand name or contact:

**PAYNE HEATING & COOLING**
Consumer Relations Department
P.O. Box 4952
Syracuse, New York 13221-4952
1-800-417-2963

Have available the model number, series number, and serial number located on the unit rating plate to ensure correct replacement part.

**Model Nomenclature**

| MODEL | MAJOR SERIES | COOLING CAPACITY | HEATING INPUT | WIDTH | MINOR SERIES | VARIATIONS |
|---|---|---|---|---|---|---|
| PG95ESU | A | 48 | 060 | B | A | A |

## ⚠ WARNING

**FIRE, EXPLOSION, ELECTRICAL SHOCK AND CARBON MONOXIDE POISONING HAZARD**

Failure to follow this warning could result in dangerous operation, personal injury, death or property damage.

Improper installation, adjustment, alteration, service, or maintenance can cause personal injury, property damage, or death. Consult a qualified installer, service agency, or your local gas supplier for information or assistance. The qualified installer or service agency must use only factory-authorized replacement parts, kits, or accessories when modifying this product.

©2019 Payne Heating & Cooling Systems • 7310 W. Morris St. • Indianapolis, IN 46231
Edition Date: 10/19
Catalog No: IM–PG95ESU–02
Replaces: IM–PG95ESU–01
Manufacturer reserves the right to change, at any time, specifications and designs without notice and without obligations.