574D--A and 577C--C
LEGACY™ 13 SEER THREE PHASE 2 ½ - 5 NOMINAL TONS (SIZES 30-60)
LEGACY™ 14 SEER SINGLE AND THREE PHASE 2-5 NOMINAL TONS (SIZES 24-60) SINGLE-PACKAGED AIR CONDITIONER AND GAS FURNACE SYSTEM WITH PURON® (R-410A) REFRIGERANT

bryant®

Owner's Information Manual

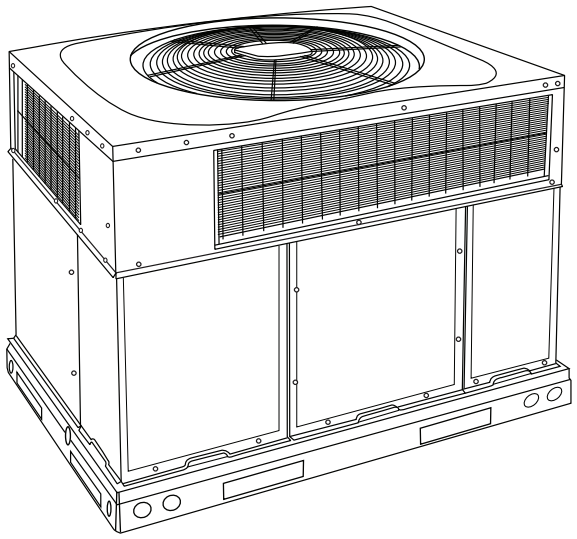

A09034

Fig. 1 - Unit 574D--A and 577C--C

NOTE TO EQUIPMENT OWNER:

For your convenience, please record the model and serial numbers of your new equipment in the spaces provided. This information, along with the installation data and dealer contact information, will be helpful should your system require maintenance or service.

UNIT INFORMATION

Model # _____

Serial # _____

ACCESSORIES (List type of model #)

_____

_____

_____

INSTALLATION INFORMATION

Date Installed_____

DEALERSHIP CONTACT INFORMATION

Company Name_____

Address_____

_____

Phone Number _____

Technician Name _____

_____

NOTE TO INSTALLER:
This manual must be left with the equipment owner.

Our products are designed, tested and built in accordance with DOE standardized procedures; however, actual operating results and efficiencies may vary based on manufacturing and supplier tolerances, equipment configuration, operating conditions and installation practices.

SAFETY CONSIDERATIONS

Improper installation, adjustment, alteration, service maintenance, or use can cause explosion, fire, electrical shock, or other conditions which may cause death, personal injury, or property damage. Consult a qualified installer, service agency, or your distributor or branch for information or assistance. The qualified installer or agency must use factory-authorized kits or accessories when modifying this product. Refer to the individual instructions packaged with the kits or accessories when installing.

Follow all safety codes. Wear safety glasses, protective clothing, and work gloves. Have a fire extinguisher available. Read these instructions thoroughly and follow all warnings or cautions included in literature and attached to the unit. consult local building codes, the current editions of the National Fuel Gas Code (NFGC) NFPA 54/ANSI Z223.1, and the National Electrical Code (NEC) NFPA 70.

In Canada refer to the current editions of the National Standards of Canada CAN/CSA-B149.1 and .2 Natural Gas and Propane Installation codes, and Canadian Electrical Code CSA C22.1

Recognize safety information. This is the safety-alert symbol ⚠. When you see this symbol on the unit and in instructions or manuals, be alert to the potential for personal injury. Understand these signal words: DANGER, WARNING, and CAUTION. These words are used with the safety-alert symbol. DANGER identifies the most serious hazards which **will** result in severe personal injury or death. WARNING signifies hazards which **could** result in personal injury or death. CAUTION is used to identify unsafe practices which **may** result in minor personal injury or product and property damage. NOTE is used to highlight suggestions which **will** result in enhanced installation, reliability, or operation.

NOTE: Installer: This manual should be left with the equipment user.

⚠ WARNING

FIRE, EXPLOSION, ELECTRICAL SHOCK HAZARD

Failure to follow this warning could result in personal injury, death or property damage.

Installation and servicing of this equipment can be hazardous due to mechanical and electrical components. Only trained and qualified personnel should install, repair, or service this equipment.

⚠ WARNING

FIRE, EXPLOSION HAZARD

Failure to follow this warning could result in personal injury, death, and/or property damage.

Do not store or use combustible materials, gasoline, or other flammable vapors and liquids in the vicinity of this or any other appliance.

⚠ WARNING

FIRE, EXPLOSION, ELECTRICAL SHOCK HAZARD

Failure to follow this warning could result in personal injury, death or property damage.

Do not use this unit if any part has been under water. Immediately call a qualified service technician to inspect the unit and to replace any part of the control system which has been under water.

⚠ WARNING

FIRE AND EXPLOSION HAZARD

Failure to follow this warning could result in personal injury, death and/or property damage.

What to do if you smell gas:
1. Do not try to light any appliance.
2. Do not touch any electrical switch; do not use any phone in your building.
3. Leave the building immediately.
4. Immediately call your gas supplier from a nearby phone. Follow the gas supplier's instructions.
5. If you cannot reach your gas supplier, call the fire department.

⚠ WARNING

ELECTRICAL SHOCK HAZARD

Failure to follow this warning could result in personal injury and/or death.

Before performing recommended maintenance, be sure the main power switch to unit is turned off and lock-out tag is installed. There may be more than one disconnect switch.

⚠ WARNING

FIRE, EXPLOSION, ELECTRICAL SHOCK HAZARD

Failure to follow this warning could result in personal injury, death and/or property damage.

1. Do not turn off the electrical power to unit without first turning off the gas supply.
2. Before attempting to start the gas heating section, familiarize yourself with all the procedures that must be followed.

⚠ WARNING

FIRE, EXPLOSION HAZARD

Failure to follow this warning could result in personal injury, death, and/or property damage.

Do not attempt to light by hand.

⚠ CAUTION

CUT HAZARD

Failure to follow this caution may result in personal injury.

When removing access panels or performing maintenance functions inside your unit, be aware of sharp sheet metal parts and screws. Although special care is taken to reduce sharp edges to a minimum, be extremely careful and wear safety glasses, protective clothing, and work gloves when handling parts or reaching into the unit.

UNIT INTRODUCTION

This unit is a small packaged gas heat/electric cooling system that can utilize the comfort of gas heating packaged along with efficient electric air conditioning. This unit uses Puron®, the environmentally balanced refrigerant for cooling.

Starting or Shutting Off Unit

NOTE: Your combination heating/cooling unit is equipped with an automatic direct spark ignition and power combustion blower.

To start unit gas heat:

Refer to Fig. 2 for location of unit front access panel. Refer to Fig. 3 for location of gas valve. Refer to Fig. 4 while proceeding with the following steps.

1. Set the temperature selector on room thermostat to the lowest temperature setting and set system switch to HEAT.
2. Close the external manual gas shutoff valve.
3. Turn off the electrical supply to the unit.
4. Remove the control access panel with a 5/16-in. nut driver. (See Fig. 2.)

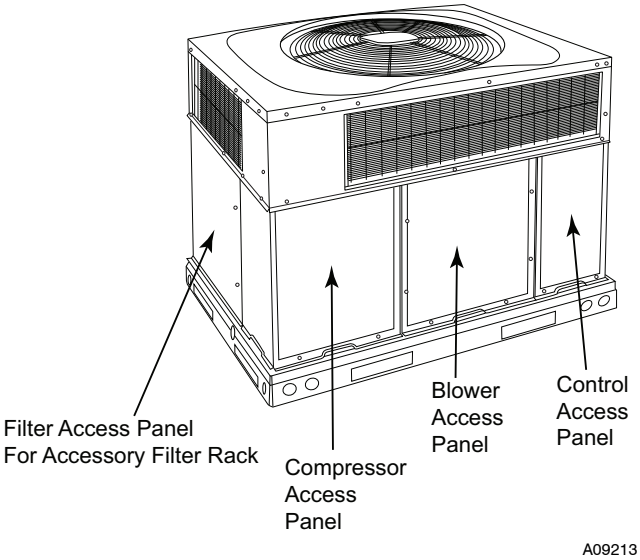

Fig. 2 - Unit Access Panel

5. Move the selector switch on the internal gas valve to the OFF position and wait 5 minutes.
6. Move the selector switch on the internal gas valve to the ON position.
7. Replace the control access panel.
8. Turn on the electrical supply to unit.
9. Open the external manual gas shutoff valve.
10. Set the temperature selector on room thermostat slightly above room temperature to start unit. The induced-draft combustion air fan will start. Main gas valve will open and main burners should ignite within 5 seconds. If the burner does not light within 5 seconds, the ignition module will go into a Retry Mode after a period of approximately 22 seconds (following the 5-second ignition period). If the burners do not light within 15 minutes of the initial call for heat, there is a lockout.
11. Set the temperature selector on room thermostat to desired setting.

⚠ WARNING

FIRE AND EXPLOSION HAZARD

Failure to follow this warning could result in personal injury, death, and/or property damage.

1. If the main burners fail to light, or the blower fails to start, shut down gas heating section and call your dealer for service.
2. Never attempt to manually light the main burners on unit with a match, lighter, or any other flame. If the electric sparking device fails to light the main burners, refer to the following shutdown procedures, then call your dealer as soon as possible.

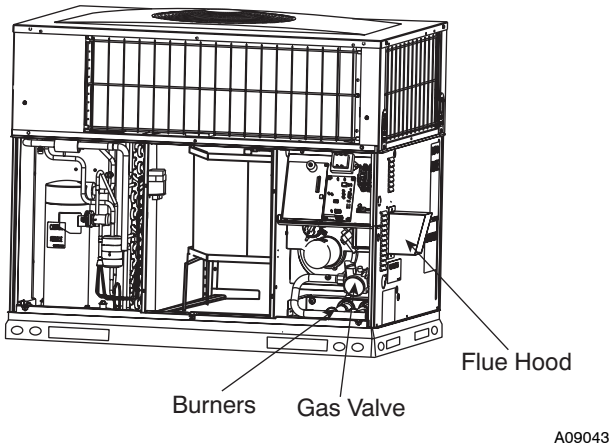

Fig. 3 - Gas Heating/Electric Cooling Unit with Access Panel Removed

To shut off unit gas heat:

⚠ WARNING

FIRE, EXPLOSION, ELECTRICAL SHOCK HAZARD

Failure to follow this warning could result in personal injury, death, and/or property damage.

Do not turn off the electrical power to unit without first turning off the gas supply.

NOTE: If the unit is being shut down because of a malfunction, call your dealer as soon as possible.

Should overheating occur or the gas supply fail to shut off, shut off the external manual gas valve to the unit before shutting off the electrical supply. Do not use this unit if any part has been under water. Immediately call a qualified service technician to inspect the unit and to replace any part of the control system and any gas control which has been under water.

Refer to Fig. 5 while proceeding with the following steps.

1. Set the temperature selector on room thermostat to lowest temperature setting and set system SWITCH to OFF.
2. Close the external manual shutoff valve.
3. Turn off the electrical power supply to the unit.
4. Remove the control access panel. (See Fig. 2.)
5. Move the selector switch on the internal gas valve to the OFF position.
6. Replace the control access panel.

To start unit electric cooling:

Refer to Fig. 6 while proceeding with the following steps.

1. Set the temperature selector on room thermostat to highest temperature setting and set system SWITCH to OFF.
2. Close the external manual shutoff valve, if not already closed.
3. Turn ON the electrical power supply to the unit.
4. Set system switch to COOL.
5. Set the temperature selector on room thermostat slightly below the room temperature to start unit.

To shut off unit electric cooling:

Refer to Fig. 7 while proceeding with the following steps.

1. Set the temperature selector on room thermostat to highest temperature setting and set system SWITCH to OFF.
2. Close the external manual shutoff valve, if not already closed.
3. Turn off the electrical power supply to the unit.

OPERATING YOUR UNIT

The operation of your unit is controlled by the indoor temperature control (thermostat). You simply adjust the thermostat and it maintains the indoor temperature at the level you select. Most thermostats of heating and cooling systems have 3 controls: a temperature control selector, a FAN control, and a SYSTEM or MODE control. Refer to your thermostat owner's manual for more information.

To better protect your investment and to eliminate unnecessary service calls, familiarize yourself with the following facts:

Cooling Mode

With the SYSTEM control set to COOL, your unit will run in cooling mode until the indoor temperature is lowered to the level you have selected. On extremely hot days, your unit will run for longer periods at a time and have shorter "off" periods than on moderate days.

Gas Heat Mode

With the SYSTEM or MODE control of your indoor thermostat set to HEAT, your unit will run in heating mode until room temperature is raised to the level you have selected. On cold days and nights, your system will typically run for longer periods of time and have shorter "off" periods than on moderate days.

MAINTENANCE AND SERVICE

This section discusses maintenance that should be performed on your system. Most maintenance should be performed by your dealer. You, as the owner, may wish to handle some minor maintenance for your new unit.

Routine Maintenance

All routine maintenance should be handled by skilled, experienced personnel. Your dealer can help you establish a standard procedure.

For your safety, keep the unit area clear and free of combustible materials, gasoline, and other flammable liquids and vapors.

To assure proper functioning of the unit, flow of condenser air must not be obstructed from reaching the unit. Clearance from the top of the unit is 48 in. (1219 mm). Clearance of at least 36 in. (914 mm) is required on sides except the power entry side (42 in. (1067 mm) clearance) and the duct side (12 in. (305 mm) minimum clearance). Also, ensure that the return-air duct connection (s) is physically sound, is sealed to the furnace casing, and terminates outside the space containing the furnace.

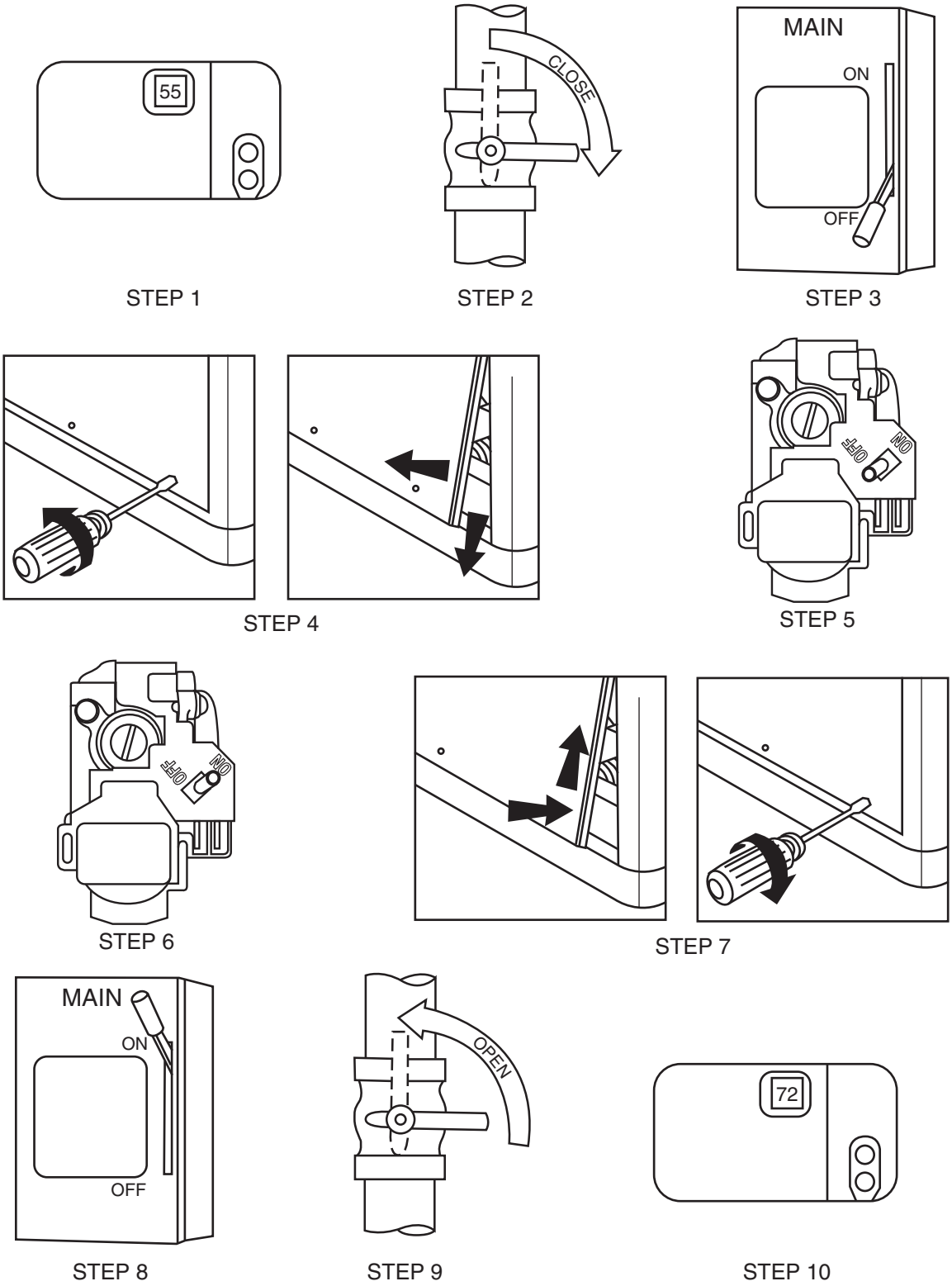

Fig. 4 - To Start Unit Gas Heat

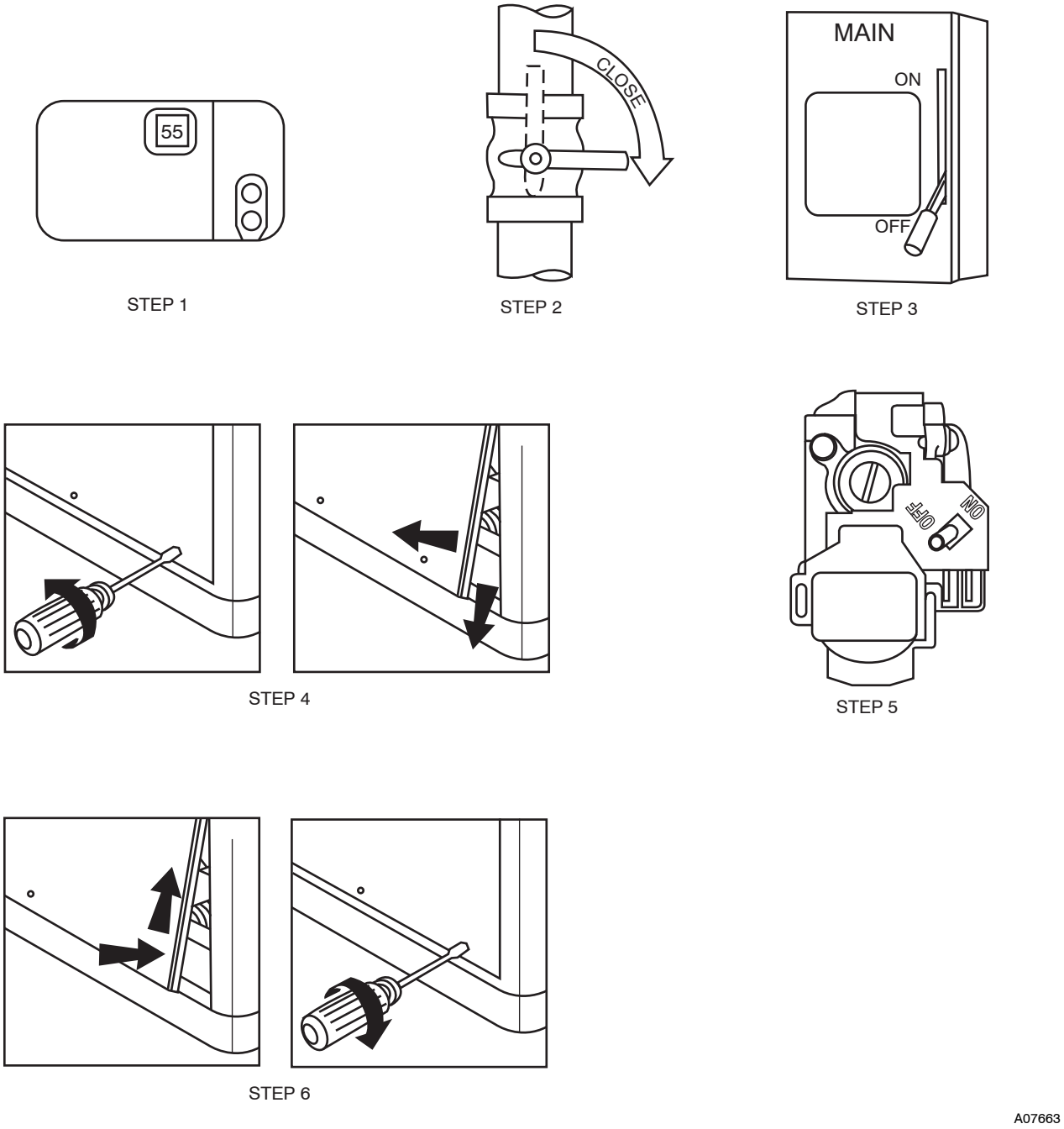

Fig. 5 - To Shut-off Unit Gas Heat

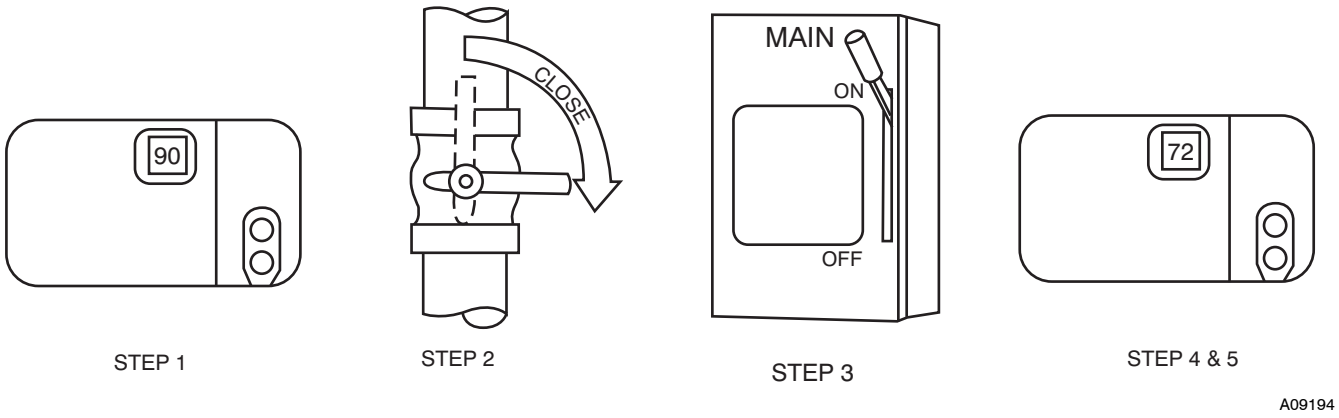

Fig. 6 - To Start Unit Electric Cooling

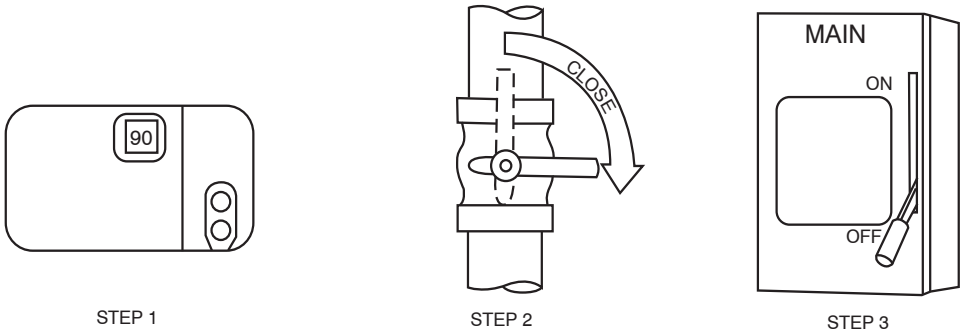

Fig. 7 - To Shut-off Unit Electric Cooling

Maintenance and Care for the Equipment Owner

Before performing equipment maintenance yourself, please carefully consider the following:

⚠ WARNING

FIRE, EXPLOSION, ELECTRICAL SHOCK AND CUT HAZARD

Failure to follow this warning could result in personal injury, death or property damage.

1. Turn off gas supply first, then all electrical power to your unit and install lock-out tag before servicing or performing maintenance.
2. When removing access panels or performing maintenance functions inside your unit, be aware of sharp sheet metal parts and screws. Although special care is taken to reduce sharp edges to a minimum, be extremely careful when handling parts or reaching into the unit. Wear safety glasses, gloves, and appropriate protective clothing.

Air Filters

The air filter(s) should be checked every 3 or 4 weeks and changed or cleaned whenever it becomes dirty. Dirty filters produce excessive stress on the blower motor and can cause the motor to overheat and shut down.

This unit must have air filters in place before it can be operated. These filters can be located in one of at least two places. In many applications, the installer will provide return air filter grilles mounted on the wall or ceiling of the conditioned structure. In the instance of filter grilles, the filters can simply be removed from the grille and replaced.

The other typical application is an accessory filter rack installed inside the unit itself. The following information is given to assist in changing filters used in these internal filter racks.

Filter kits are available as a purchased accessory or a factory installed option. The same filter kit is included with the accessory economizers and factory installed economizers.

Table 1 – Replacement Filter Sizes

Unit Size	Filter Size
24-040/060	2 each 20 x 12 x 1 (508 x 305 x 25 mm)
30-040/060	2 each 20 x 12 x 1 (508 x 305 x 25 mm)
36-060/090	2 each 20 x 12 x 1 (508 x 305 x 25 mm)
42-060/090	1 each 24 x 14 x 1 (610 x 356 x 25 mm), 24 x 16 x 1 (610 x 406 x 25 mm)
48-090/115/130	1 each 24 x 14 x 1 (610 x 356 x 25 mm), 24 x 16 x 1 (610 x 406 x 25 mm)
60-090/115/130*	1 each 24 x 16 x 1 (610 x 406 x 25 mm), 24 x 18 x 1 (610 x 457 x 25 mm)

*Units with bent indoor coil.

To replace or inspect filters in accessory filter rack (See Fig. 2):

1. Remove the filter access panel using a 5/16-in. nut driver.
2. Remove the filter(s) by pulling it out of the unit. If the filter(s) is dirty, clean or replace with a new one.

When installing the new filter(s), note the direction of the airflow arrows on the filter frame which should be pointing at the indoor coil.

3. Reinstall filter access panel ensuring opening is air and water tight.

If you have difficulty locating your air filter(s) or have questions concerning proper filter maintenance, contact your dealer for instructions. When replacing filters, always use the same size and type of filter that was supplied originally by the installer. See Table 1 for filter sizes supplied with accessory filter rack.

Replacing or inspecting filters in units with economizers

Small Chassis (See Fig. 8)

1. Remove return air duct cover at rear of unit using a 5/16-in. nut driver.
2. Remove the filter(s) by pulling it out and through the unit duct opening. If filter is dirty, replace both filters with new ones.

When installing the new filters, note the direction of the airflow arrows on the filter frame, which should be pointing at the indoor coil.

3. Reinstall duct cover ensuring opening is air and watertight.

Large Chassis (See Fig. 9)

1. Remove filter access door using a 5/16-in. nut driver.
2. Remove the filter(s) by pulling it out and through the unit filter access door. If filter is dirty, replace both filters with new ones.

Units with bent indoor coils, install 24 x 18 x 1 (610 x 457 x 25 mm) filter first and then install 24 x 16 x 1 (610 x 406 x 25) filter.

When installing the new filters, note the direction of the airflow arrows on the filter frame, which should be pointing at the indoor coil.

3. Reinstall filter access door ensuring opening is air and water tight.

⚠ CAUTION

UNIT OPERATION HAZARD

Failure to follow this caution may result in property damage.

Never operate your unit without filters in place. An accumulation of dust and lint on internal parts of your unit can cause loss of efficiency and blower motor and/or compressor damage.

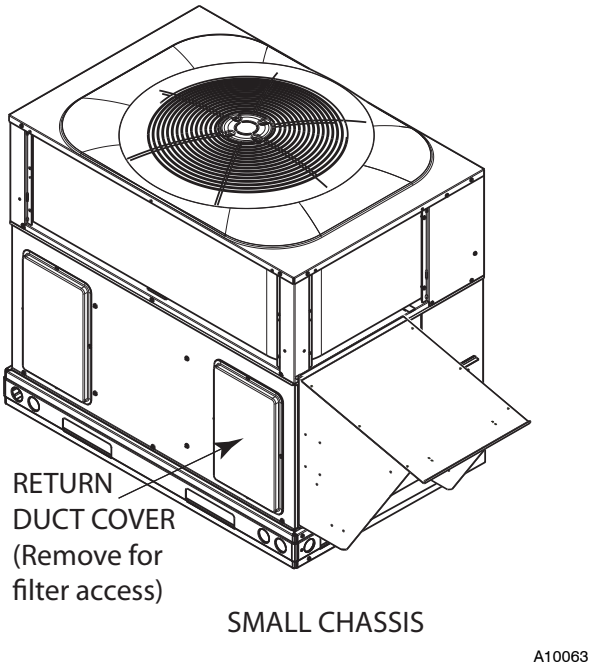

Fig. 8 - Small Chassis Filter Access

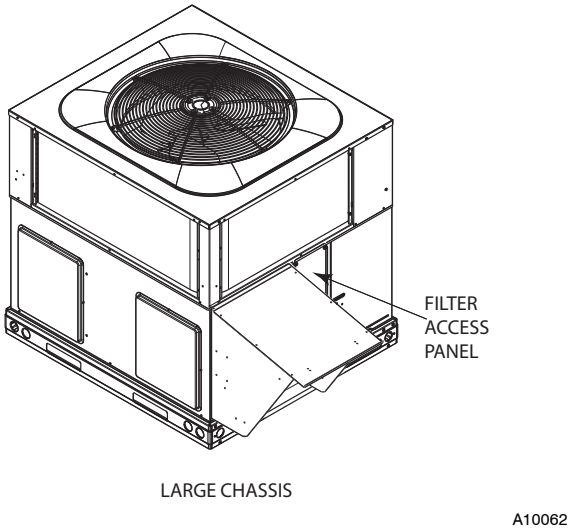

Fig. 9 - Large Chassis Filter Access

Fans and Fan Motors

Periodically check the condition of fan wheels and housings and fan motor shaft bearings. Contact your dealer for the required annual maintenance.

Heat Exchanger

To ensure dependable and efficient heating operation, the heat exchanger should be checked by a qualified maintenance person before each heating season, and cleaned when necessary. This checkout should not be attempted by anyone not having the required expertise and equipment to properly do the job. Contact your dealer for the required periodic maintenance.

Indoor and Outdoor Coils

Cleaning of the coils should only be done by qualified service personnel. Contact your dealer for the required annual maintenance.

Condensate Drain

The drain pan and condensate drain line should be checked and cleaned at the same time the cooling coils are checked by your dealer.

Compressor

All compressors are factory shipped with a normal charge of the correct type of refrigeration grade oil. A compressor should rarely require additional oil.

Condenser (Outdoor) Fan

⚠ WARNING

PERSONAL INJURY AND UNIT DAMAGE HAZARD

Failure to follow this warning could result in personal injury, death or property damage.

Do not insert sticks, screwdrivers, or any other objects into revolving fan blades.

The fan must be kept free of all obstructions to ensure proper cooling. Contact your dealer for any required service.

Electrical Controls and Wiring

Electrical controls are difficult to check without proper instrumentation. If there are any discrepancies in the operating cycle, contact your local dealer and request service.

Refrigerant Circuit

The refrigerant circuit is difficult to check for leaks without the proper equipment. If inadequate cooling is suspected, contact your local dealer for service.

⚠ WARNING

EXPLOSION AND ENVIRONMENTAL HAZARD

Failure to follow this warning could result in personal injury, death or property damage.

System under pressure. Relieve pressure and recover all refrigerant before system repair or final unit disposal. Use all service ports and open all flow-control devices, including solenoid valves.

Unit Panels

After performing any maintenance or service on the unit, be sure all panels are fastened securely in place to prevent rain from entering unit cabinet and to prevent disruption of the correct unit airflow pattern.

Combustion Area and Vent System

For proper and safe operation, the furnace needs air for combustion and ventilation. The air openings, on the furnace, the air openings to the area in which the furnace is installed, and the spacing around the furnace must not be blocked or obstructed.

The combustion area and vent system should be inspected visually before each heating season. The normal accumulation of dirt, soot, rust, and scale can result in loss of efficiency and improper performance if allowed to build up. This inspection should be done by a trained service person.

⚠ WARNING

FIRE, EXPLOSION HAZARD

Failure to follow this warning could result in personal injury, death and/or property damage.

If your unit makes an especially loud noise when the main burners are ignited, shut down the heating section and call your dealer.

⚠ CAUTION

BURN HAZARD

Failure to follow this caution may result in personal injury.

Components in heating section may be hot after unit has been started up. When observing flame, be careful not to get close to or touch heating components.

Regular Dealer Maintenance

In addition to the type of routine maintenance you might be willing to perform, your unit should be inspected regularly by a properly trained service technician. An inspection (preferably each year, but at least every other year) should include the following:

1. Inspection of all flue product passages-including the burners, heat exchanger, and flue collector box, Mare sure the burner flames are blue in color and in proper adjustment. Refer to Fig. 10 for burner flame.
2. Inspection of all combustion-and ventilation-air passages and openings.
3. Close inspection of all gas pipes leading to and inside of your unit.
4. Inspection and, if required, cleaning of the outdoor and indoor coils.
5. Inspection and, if required, cleaning of the indoor coil condensate drain pan.

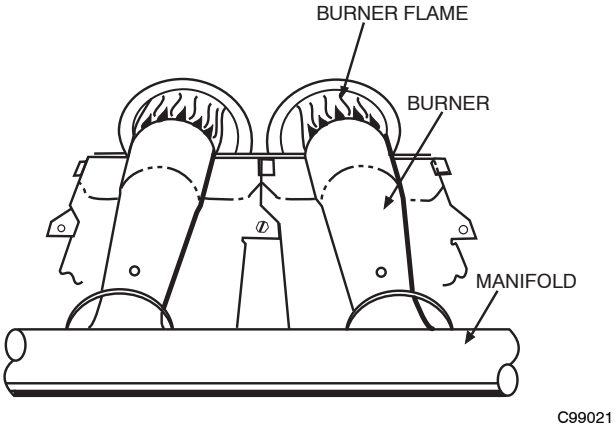

Fig. 10 - Monoport Burner

6. Inspection and cleaning of blower wheel housing and motor.
7. Inspection of all supply-air and return-air ducts for leaks, obstructions, and insulation integrity. Any problems found should be resolved at this time.
8. Inspection of the unit base to ensure that no cracks, gaps, etc., exist which may cause a hazardous condition.
9. Inspection of the unit casing for signs of deterioration.
10. Inspection of all electrical wiring and components to assure proper connection.
11. Inspection for leaks in the refrigerant circuit. Pressure check to determine appropriate refrigerant charge.
12. Operational check of the unit to determine working conditions. Repair or adjustment should be made at this time.

Your servicing dealer may offer an economical service contract that covers seasonal inspections. Ask for further details.

Complete service instructions can be found in the unit Installation, Start-up and Service Instructions.

Warranty Certificate

Your unit has a limited warranty. Be sure to read the warranty carefully to determine the coverage for your unit.

Before you call for service...

...check for several easily-solved problems.

If insufficient heating or cooling is suspected:

( ) Check for sufficient airflow. Check the air filter for dirt. Check for blocked return-air or supply-air grilles. Be sure they are open and unobstructed. If these checks do not reveal the cause, call your servicing dealer.

If your unit is not operating at all, check the following list for easy solutions:

( ) Check to be sure that your thermostat temperature selector is set below the indoor temperature during the cooling season or above the indoor temperature during heating season. Be sure the SYSTEM switch or MODE control is in the COOL or HEAT position and not in the OFF position.

( ) If your unit still fails to operate, call your servicing dealer for troubleshooting and repairs. Specify the model and serial numbers of your unit. (Record them in this manual in the space provided.) If the dealer knows exactly which unit you have, he may be able to offer suggestions over the phone, or save valuable time through knowledgeable preparation for the service call.

In Case of Trouble

If you perform the steps above and unit performance is still unsatisfactory, shut off the unit and call your dealer.

Heating & Cooling Systems

TO OBTAIN INFORMATION ON PARTS: Consult your installing dealer or classified section of your local telephone directory under the "Heating Equipment" or "Air Conditioning Contractors & Systems" heading for dealer listing by brand name.

Have available the Model No., Series Letter, & Serial No. of your equipment to ensure correct replacement part.

Copyright 2016 Bryant Heating & Cooling Systems, 7310 W. Morris St. Indianapolis, IN 46231 Edition Date: 09/16

Catalog No: OM574D–577C–06

Manufacturer reserves the right to change, at any time, specifications and designs without notice and without obligations.

Replaces: OM574D–577C–05