925SA
PREFERRED™ SERIES SINGLE-STAGE
4-WAY MULTIPOISE
CONDENSING GAS FURNACE, SERIES A

bryant®

Product Data

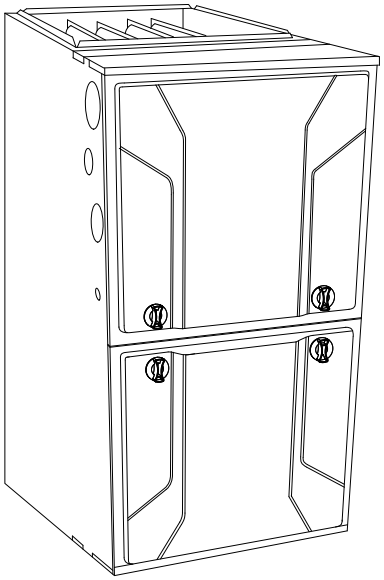

A11264

The 925SA Multipoise SEER Boost Condensing Gas Furnace features the single-stage Preferred™ System. The Boost ECM multiple-speed blower motor is at the heart of the electrical efficiency provided by this furnace. With an Annual Fuel Utilization Efficiency (AFUE) of 96.2%, the Preferred single-stage gas furnace provides added savings over standard gas furnaces. This Preferred Gas Furnace features 4-way multipoise installation flexibility, and is available in six model sizes. The 925SA can be vented for direct vent/two-pipe, ventilated combustion air, or single-pipe applications. A Bryant Preferred Control and Preferred Air Conditioner or Heat Pump, can be used to form a complete Preferred Series System. All units meet California Air Quality Management District emission requirements. All sizes are design certified in Canada. All sizes are design certified for use in Manufactured Housing (Mobile Home) applications when used with factory-approved MH accessory kit.

STANDARD FEATURES

- Quiet operation. Compare for yourself at HVACpartners.com.
- Most sizes meet ENERGY STAR® Version 4.0 criteria for gas furnaces: 95+ AFUE; AMACF electrical rating; 2% or less cabinet airflow leakage. ***See table on Page 2.***
- Ideal height 35" (889 mm) cabinet: short enough for taller coils, but still allows enough room for service.
- Preferred Features—match with the Preferred Control for Preferred System benefits.
- Silicon Nitride Perfect Light™ Hot Surface Igniter.
- SmartEvap™ technology helps control humidity levels in the home when used with a compatible humidity control system.
- Fan On Plus™ technology allows control of continuous fan speed from a compatible thermostat.
- External Media Filter Cabinet included.
- 4-way multipoise design for upflow, downflow or horizontal installation, with unique vent elbow and optional through-the-cabinet downflow venting capability.
- Boost ECM multiple-speed blower motor, single-speed inducer motor, and single-stage gas valve.
- Self-diagnostics.
- Adjustable blower speed for cooling, continuous fan, and dehumidification.
- Approved for Twinning applications with accessory kit (42060 through 66120 models, only).
- Approved for Manufactured Housing/Mobile Home applications with MH accessory kit.
- Aluminized-steel primary heat exchanger.
- Stainless-steel condensing secondary heat exchanger.
- Propane convertible (See Accessory list).
- Factory-configured ready for upflow applications.
- Fully-insulated casing including blower section.
- Convenient Air Purifier and Humidifier connections.
- Direct-vent/sealed combustion, single-pipe venting or ventilated combustion air.
- Installation flexibility: sidewall or vertical vent.
- Residential installations may be eligible for consumer financing through the Retail Credit Program.
- Certified to leak 2% or less of nominal air conditioning CFM delivered when pressurized to 1-in. water column with all present air inlets, air outlets, and condensate drain port(s) sealed.

Preferred™ SERIES

ENERGY STAR Select Models

DESIGN CERTIFIED®

CERTIFIED®

AHRI CERTIFIED™ www.ahridirectory.org

Use of the AHRI Certified TM Mark indicates a manufacturer's participation in the program. For verification of certification for individual products, go to www.ahridirectory.org.

Certified System™ ISO 9001 QMI-SAI Global

Always Ask For FACTORY AUTHORIZED PARTS

SAP ORDERING NO.	CASING DIMENSIONS (IN.)			RATED HEATING OUTPUT†			HEATING AIRFLOW		COOLING CFM @ 0.5 ESP (in. W.C.)	MOTOR HP SPEED	MEDIA CABINET SUPPLIED (IN.)
	H	D	W	BTUH	AFUE	ENERGY STAR	HEATING CFM	HEATING ESP (in. W.C.)			
925SA30040E14	35	29.5	14.2	39,000	96.2%	√	695	0.1	925	1/2 - 5	16
925SA36040E17	35	29.5	17.5	39,000	96.2%	√	705	0.1	1085	1/2 - 5	16
925SA36060E14	35	29.5	14.2	58,000	95.5%	√	940	0.12	1090	1/2 - 5	16
925SA42060E17	35	29.5	17.5	58,000	96.2%	√	1000	0.12	1505	3/4 - 5	16
925SA42080E17	35	29.5	17.5	78,000	96.2%	√	1360	0.15	1610	3/4 - 5	16
925SA60080E21	35	29.5	21.0	78,000	96.2%	√	1360	0.15	2015	1 - 5	20
925SA60100E21	35	29.5	21.0	97,000	96.2%	-	1700	0.2	2110	1 - 5	20
925SA66120E24	35	29.5	24.0	117,000	96.2%	-	2125	0.2	2055	1 - 5	24

† Capacity in accordance with DOE test procedures. Ratings are position dependent. See rating plate.
‡ Heating CFM at factory default blower motor heating tap settings.
ESP – External Static Pressure
√ Meets ENERGY STAR criteria

FEATURES AND BENEFITS

SmartEvap™ Technology — When paired with a compatible thermostat, this dehumidification feature overrides the cooling blower off-delay when there is a call for dehumidification. By deactivating the blower off-delay, SmartEvap technology prevents condensate that remains on the coil after a dehumidification cycle from re-humidifying throughout the home. This results in reduced humidity and a more comfortable indoor environment for the homeowner.

Unlike competitive systems, SmartEvap technology only overrides the cooling blower off delay. when humidity control is needed. Once humidity is back in control, SmartEvap re-enables the energy-saving cooling blower off-delay.

Fan On Plus™ Technology — Sometimes the constant fan setting on a standard furnace system can actually reduce homeowner comfort by providing too much or too little air! Fan On Plus technology improves comfort all year long by allowing the homeowner to select the continuous fan speed of their choice using a compatible thermostat.

HYBRID HEAT® Dual Fuel system — This system can provide more control over your monthly energy bills by automatically selecting the most economical method of heating. With HYBRID HEAT, our system automatically switches between the gas furnace and the electric heat pump as outside temperatures change to maintain greater efficiency and comfort than with any traditional single-source heating system. The heat pump also delivers high-efficiency cooling in the summer.

Power Heat™ Igniter — Bryant's unique SiN igniter is not only physically robust but it is also electrically robust. It is capable of running at line voltage and does not require complex voltage regulators as do other brands. This unique feature further enhances the gas furnace reliability and continues Bryant's tradition of technology leadership and innovation in providing a reliable and durable product.

Boost ECM Blower Motor — This basic ECM, or electronically commutated motor, can provide an efficiency enhancement for select Bryant air conditioner or heat pump systems. It uses less electrical power than its PSC counterpart and also has a wider range of speeds

Reliable Heat Exchanger Design — The aluminized steel, clam shell primary heat exchanger was re-engineered to achieve greater efficiency out of a smaller size. The first two passes of the heat exchanger are based on the current 80% product, a design with more than ten years of field-proven performance and success. These innovations, paired with the continuation of a crimped, no-weld seam create an efficient, robust design for this essential component.

The condensing heat exchanger, a stainless steel fin and tube design, is positioned in the furnace to extract additional heat. Stainless steel coupling box componentry between heat exchangers has exceptional corrosion resistance in both natural gas and propane applications.

Media Filter Cabinet — Enhanced indoor air quality in the home is made easier with our media filter cabinet—a standard accessory on all deluxe furnaces. When installed as a part of the system, this cabinet allows for easy and convenient addition of a Bryant high efficiency air filter.

4-Way Multipoise Design — One model for all applications – there is no need to stock special downflow or horizontal models when one unit will do it all. The new heat exchanger design allows these units to achieve the certified AFUE in all positions.

Direct or Single-pipe Venting, or Optional Ventilated Combustion Air — This furnace can be installed as a 2-pipe (Direct Vent) furnace, in an optional ventilated combustion air application, or in single-pipe, non-direct vent applications. This provides added flexibility to meet diverse installation needs.

Sealed Combustion System — This furnace brings in combustion air from outside the furnace, which results in especially quiet operation. By sealing the entire combustion vestibule, the entire furnace can be made quieter, not just the burners.

Insulated Casing — Foil-faced insulation in heat exchanger section of the casing minimizes heat loss. The acoustical insulation in the blower compartment reduces air and motor noise for quiet operation.

Monoport Burners — The burners are specially designed and finely tuned for smooth, quiet combustion and economical operation.

Bottom Closure — Factory-installed for side return; easily removable for bottom return. The multi-use bottom closure can also serve for roll-out protection in horizontal applications, and act as the bottom closure for the optional return air base accessory.

Blower Access Panel Switch — Automatically shuts off 115-v power to furnace whenever blower access panel is opened.

Quality Registration — Our furnaces are engineered and manufactured under an ISO 9001 registered quality system.

Certifications — This furnace is CSA (AGA and CGA) design certified for use with natural and propane gases. The furnace is factory-shipped for use with natural gas. A CSA listed gas conversion kit is required to convert furnace for use with propane gas. The efficiency is AHRI efficiency rating certified. This furnace meets California Air Quality Management District emission requirements.

SPECIFICATIONS

Heating Capacity and Efficiency		30040	36040	36060	42060	48080	60080	60100	66120
Input	High Heat (BTUH)	40,000	40,000	60,000	60,000	80,000	80,000	100,000	120,000
Output	High Heat (BTUH)	39,000	39,000	58,000	58,000	78,000	78,000	97,000	117,000
Certified Temperature Rise Range °F (°C)	High Heat	40 - 70 (22 - 39)	40 - 70 (22 - 39)	45 - 75 (25 - 42)	40 - 70 (22 - 39)	40 - 70 (22 - 39)	40 - 70 (22 - 39)	40 - 70 (22 - 39)	40 - 70 (22 - 39)

Airflow Capacity and Blower Data		30040	36040	36060	42060	48080	60080	60100	66120
Rated External Static Pressure (in. w.c.)	Heating	0.10	0.10	0.12	0.12	0.15	0.15	0.20	0.20
	Cooling	0.5	0.5	0.5	0.5	0.5	0.5	0.5	0.5
Airflow Delivery @ Rated ESP (CFM)	High Heat	695	705	940	1000	1360	1360	1700	2125
	Cooling	925	1085	1090	1505	1610	2015	2110	2055
Cooling Capacity (tons) @ 400, 350 CFM/ton	CFM/ton	2	2.5	2.5	3.5	4	5	5	5
	CFM/ton	2.5	3	3	4	4.5	5.5	6	6
Direct-Drive Motor Type		Electronically Commutated Motor (ECM)							
Direct-Drive Motor HP		1/2	1/2	1/2	3/4	3/4	1	1	1
Motor Full Load Amps		6.8	6.8	6.8	8.4	8.4	10.9	10.9	10.9
RPM Range		600 - 1200							
Speed Selections		5							
Blower Wheel Dia x Width	in.	11 x 7	11 x 8	11 x 7	11 x 8	11 x 8	11 x 10	11 x 10	11 x 11
Air Filtration System		Factory Supplied Media Cabinet Field Supplied Filter							
Filter Used for Certified Watt Data		KGAWF1506UFR							

Electrical Data		30040	36040	36060	42060	48080	60080	60100	66120
Input Voltage	Volts-Hertz-Phase	115-60-1							
Operating Voltage Range	Min-Max	104-127							
Maximum Input Amps	Amps	7.4	7.4	7.5	9.1	9.1	11.6	11.7	11.7
Unit Ampacity	Amps	10.3	10.3	10.4	12.4	12.4	15.5	15.6	15.6
Minimum Wire Size	AWG	14	14	14	14	14	12	12	12
Maximum Wire Length @ Minimum Wire Size	Feet	36	36	35	30	30	37	36	36
	(M)	(11.0)	(11.0)	(10.7)	(9.1)	(9.1)	(11.3)	(11.0)	(11.0)
Maximum Fuse/Ckt Bkr (Time-Delay Type Recommended)	Amps	15	15	15	15	15	20	20	20
Transfomer Capacity (24vac output)		40 VA							
External Control Power Available	Heating	27.9 VA							
	Cooling	34.6 VA							

Controls		30040	36040	36060	42060	48080	60080	60100	66120
Gas Connection Size		1/2” - NPT							
Burners (Monoport)		2	2	3	3	4	4	5	6
Gas Valve (Redundant)	Manufacturer	White Rodgers							
Minimum Inlet Gas pressure (in. wc)		4.5							
Maximum Inlet Gas pressure (in. wc)		13.6							
Gas Conversion Kit - Natural to Propane		KGANP50011SP							
Gas Conversion Kit - Propane to Natural		KGAPN42011SP							
Manufactured (Mobile) Home Kit		KGAMH0601KIT							
Ignition Device		Silicon Nitride							
Limit Control		165	180	165	180	170	200	180	160
Heating Blower Control (Heating Off-Delay)		Adjustable: 90, 120, 150, 180 seconds							
Cooling Blower Control (Time Delay Relay)		90 seconds							
Communication System		*none*							
Thermostat Connections		Com 24V, R, W, G, Y/Y2, DHUM, Y1							
Accessory Connections		EAC (115vac); HUM (24vac); 1-stg AC (via Y/Y2)							

* See Accessory List for part numbers available.

MODEL NUMBER NOMENCLATURE

Example of a Model Number

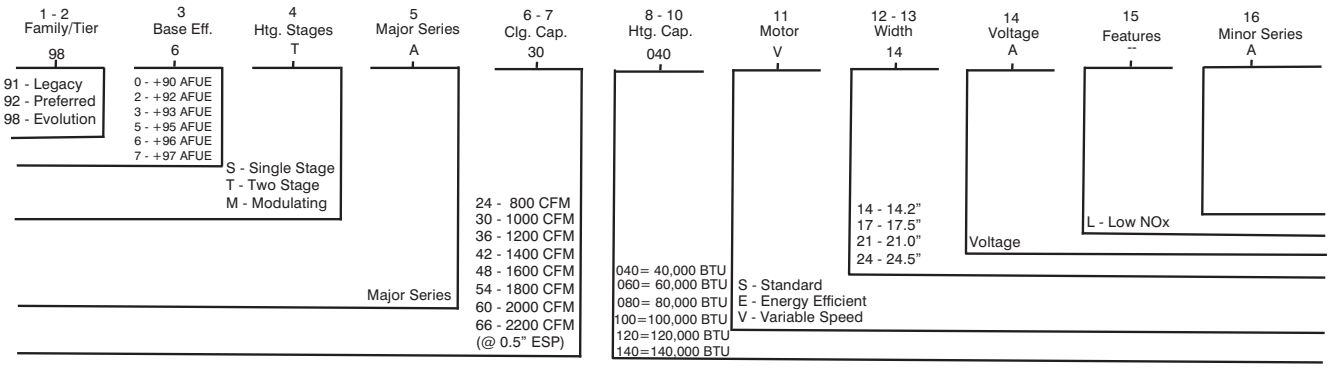

Not all familes have these models.

A12374

FURNACE COMPONENTS

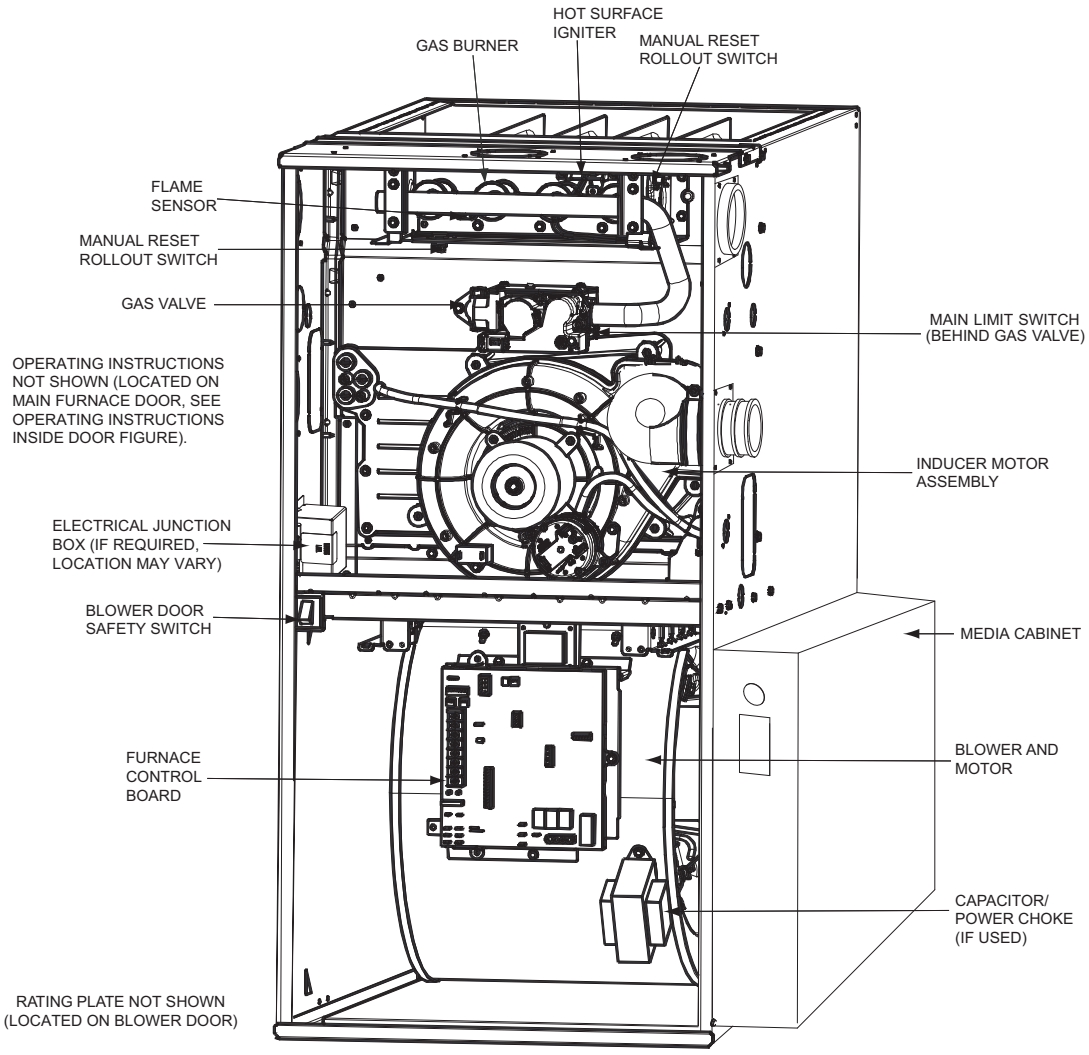

REPRESENTATIVE DRAWING ONLY, SOME MODELS MAY VARY IN APPEARANCE.

A11408

ACCESSORIES

DESCRIPTION	PART NUMBER	30040	36060	36040	42060	48080	60080	60100	66120
Venting Accessories									
Vent Kit - Through the Cabinet	KGADC0101BVC	●	●	●	●	●	●	●	●
Vent Terminal - Concentric - 2” (51 mm)	KGAVT0701CVT	See Venting Tables							
Vent Terminal - Concentric - 3” (76 mm)	KGAVT0801CVT								
Vent Terminal Bracket - 2” (51 mm)	KGAVT0101BRA								
Vent Terminal Bracket - 3” (76 mm)	KGAVT0201BRA								
Vent Kit – Rubber Coupling	KGAAC0101RVC	See Venting Tables							
Condensate Drainage Accessories									
Freeze Protect Kit - Heat Tape	KGAHT0101CFP	●	●	●	●	●	●	●	●
CPVC to PVC Drain Adapters - 1/2” CPVC to 3/4” PVC	KGAAD0110PVC	●	●	●	●	●	●	●	●
Horizontal Trap Grommet - Direct Vent	KGACK0101HCK	All DV Horizontal							
Condensate Neutralizer Kit	P908–0001	●	●	●	●	●	●	●	●
External Trap Kit	KGAET0201ETK	●	●	●	●	●	●	●	●
Ductwork Adapter Accessories									
Furnace Base Kit for Combustible Floors	KGASB0201ALL	●	●	●	●	●	●	●	●
Coil Adapter Kits – No Offset	KGADA0101ALL	●	●	●	●	●	●	●	●
Coil Adapter Kits – Single Offset	KGADA0201ALL	●	●	●	●	●	●	●	●
Coil Adapter Kits – Double Offset	KGADA0301ALL	●	●	●	●	●	●	●	●
Return Air Base (Upflow Applications) 14.0–in. wide	KGARP0301B14	●	●						
Return Air Base (Upflow Applications) 17.5–in. wide	KGARP0301B17			●	●	●			
Return Air Base (Upflow Applications) 21.0–in. wide	KGARP0301B21						●	●	
Return Air Base (Upflow Applications) 24.5–in. wide	KGARP0301B24								●
IAQ Device Duct Adapters 20.0–in. IAQ to 16 in. Side Return	KGAAD0101MEC	20”x25” IAQ Devices							
IAQ Device Duct Adapters 24.0–in. IAQ to 16 in. Side Return	KGAAD0201MEC	24”x25” IAQ Devices							
Gas Conversion Accessories									
Mobile Home Kit	KGAMH0601KIT	●	●	●	●	●	●	●	●
Gas Conversion Kit - Nat to LP	KGANP5001SP	●	●	●	●	●	●	●	●
Gas Conversion Kit - LP to Nat	KGAPN42011SP	●	●	●	●	●	●	●	●
Gas Orifice Kit - #42 (Nat Gas)	LH32DB207	●	●	●	●	●	●	●	●
Gas Orifice Kit - #43 (Nat Gas)	LH32DB202	●	●	●	●	●	●	●	●
Gas Orifice Kit - #44 (Nat Gas)	LH32DB200	●	●	●	●	●	●	●	●
Gas Orifice Kit - #45 (Nat Gas)	LH32DB205	●	●	●	●	●	●	●	●
Gas Orifice Kit - #46 (Nat Gas)	LH32DB208	●	●	●	●	●	●	●	●
Gas Orifice Kit - #47 (Nat Gas)	LH32DB078	●	●	●	●	●	●	●	●
Gas Orifice Kit - #48 (Nat Gas)	LH32DB076	●	●	●	●	●	●	●	●
Gas Orifice Kit - #54 (LP)	LH32DB203	●	●	●	●	●	●	●	●
Gas Orifice Kit - #55 (LP)	LH32DB201	●	●	●	●	●	●	●	●
Gas Orifice Kit - #56 (LP)	LH32DB206	●	●	●	●	●	●	●	●
Gas Orifice Kit - 1.25mm (LP)	LH32DB209	●	●	●	●	●	●	●	●
Gas Orifice Kit - 1.30mm (LP)	LH32DB210	●	●	●	●	●	●	●	●
Control Accessories									
Twinning Kit	KGATW0701HSI			●	●	●	●	●	●
IAQ Accessories									
Filter Pack (6 pack) – Washable - 16x25x1 (406x635x25 mm)	KGAWF1306UFR	●	●	●	●	●	●	●	●
Filter Pack (6 pack) – Washable - 24x25x1 (610x635x25 mm)	KGAWF1506UFR	●	●	●	●	●	●	●	●
EZ-Flex Filter - 16” (406 mm)	EXPXXFIL0016	Use with EZXCAB–1016							
EZ-Flex Filter - 20” (508 mm)	EXPXXFIL0020	Use with EZXCAB–1020							
EZ-Flex Filter - 24” (610 mm)	EXPXXFIL0024	Use with EZXCAB–1024							
EZ-Flex Filter with End Caps - 16” (406 mm)	EXPXXUNV0016	Use with EZXCAB–1016							
EZ-Flex Filter with End Caps - 20” (508 mm)	EXPXXUNV0020	Use with EZXCAB–1020							
EZ-Flex Filter with End Caps - 24” (610 mm)	EXPXXUNV0024	Use with EZXCAB–1024							
Cartridge Media Filter - 16” (406 mm)	FILXXCAR0016	Use with FILCABXL–1016							
Cartridge Media Filter - 20” (508 mm)	FILXXCAR0020	Use with FILCABXL–1020							
Cartridge Media Filter - 24” (610 mm)	FILXXCAR0024	Use with FILCABXL–1024							
Bryant Preferred Air Purifier - 16x25 (508x635 mm)	PGAPXX1625	Up to 1600 CFM							
Bryant Preferred Air Purifier - 20x25 (508x635 mm)	PGAPXX2025	Up to 2000 CFM							
Bryant Preferred Air Purifier Repl Filter - 16x25 (406x635 mm)	PGAPAXXCAR1625	Use with PGAPXX1625							
Bryant Preferred Air Purifier Repl. Filter - 20x25 (508x635 mm)	PGAPAXXCAR2025	Use with PGAPXX2025							

● = Used with the model furnace

AIR DELIVERY - CFM (BOTTOM RETURN WITH FILTER)

UNIT SIZE	RETURN-AIR CONNECTION	SPEED TAPS [2, 3]	EXTERNAL STATIC PRESSURE (IN.W.C.)									
			0.1	0.2	0.3	0.4	0.5	0.6	0.7	0.8	0.9	1.0
030040	SIDE/BOTTOM	Gray	1120	1080	1030	980	925	875	820	760	690	630
		Yellow	880	845	810	780	740	710	680	640	615	570
		Blue	695	665	620	575	535	495	455	420	370	280
		Orange	640	595	540	495	460	420	370	310	260	230
		Red	570	525	475	425	385	330	255	220	- [6]	- [6]
036040	SIDE/BOTTOM	Gray	1255	1220	1175	1130	1085	1040	990	940	880	825
		Yellow	940	905	870	840	805	770	735	695	665	630
		Blue	705	670	630	575	540	500	455	410	380	325
		Orange	580	535	480	425	380	335	290	235	- [6]	- [6]
		Red	555	485	425	375	330	280	215	- [6]	- [6]	- [6]
036060	SIDE/BOTTOM	Gray	1265	1225	1185	1140	1090	1030	975	920	850	760
		Yellow	1115	1085	1060	1030	1000	970	930	880	810	715
		Orange	1000	970	940	910	880	845	815	770	735	695
		Blue	945	915	885	855	820	785	745	705	675	635
		Red	770	740	700	660	620	575	540	500	455	415
042060	SIDE/BOTTOM	Gray	1720	1670	1620	1565	1505	1440	1375	1295	1220	1135
		Yellow	1325	1285	1255	1220	1185	1145	1115	1075	1040	1000
		Blue	1010	970	925	875	835	785	745	690	660	620
		Orange	1160	1115	1080	1045	1000	960	920	875	840	785
		Red	785	715	655	595	530	490	435	385	340	285
048080	SIDE/BOTTOM	Gray	1810	1770	1720	1665	1610	1540	1475	1400	1315	1235
		Yellow	1535	1500	1475	1435	1405	1370	1340	1310	1245	1160
		Blue	1380	1340	1305	1270	1240	1200	1165	1130	1090	1050
		Orange	1180	1130	1095	1060	1015	975	935	895	850	800
		Red	1100	1045	1010	970	920	885	845	790	745	690
060080	BOTTOM or TWO-SIDES [4, 5]	Gray	2290	2225	2155	2090	2015	1930	1845	1750	1640	1515
		Yellow	1810	1760	1725	1685	1640	1600	1555	1520	1480	1415
		Blue	1385	1340	1285	1240	1200	1140	1090	1050	995	950
		Orange	1560	1520	1475	1430	1385	1335	1295	1240	1200	1150
		Red	1055	985	910	860	795	750	680	615	565	495
060100	BOTTOM or TWO-SIDES [4, 5]	Gray	2340	2295	2250	2195	2110	2030	1935	1835	1725	1605
		Yellow	1950	1900	1855	1800	1755	1705	1655	1605	1560	1485
		Blue	1750	1700	1650	1605	1555	1500	1455	1395	1350	1300
		Orange	1570	1520	1460	1410	1350	1300	1240	1195	1140	1095
		Red	1350	1280	1225	1155	1105	1045	1000	950	895	830
066120	BOTTOM or TWO-SIDES [4, 5]	Gray	2275	2230	2185	2130	2055	1950	1825	1710	1610	1500
		Yellow	1875	1820	1770	1720	1660	1600	1550	1505	1450	1390
		Blue	2170	2125	2075	2025	1975	1900	1790	1695	1590	1470
		Orange [3]	1475	1420	1350	1280	1215	1165	1105	1050	995	930
		Red [3]	1625	1565	1505	1445	1385	1325	1275	1225	1170	1130

NOTE:

1. A filter is required for each return–air inlet. Airflow performance includes a 3/4–in. (19 mm) washable filter media such as contained in a factory–authorized accessory filter rack. See accessory list. To determine airflow performance without this filter, assume an additional 0.1 in. w.c. available external static pressure.
2. **ADJUST THE BLOWER SPEED TAPS AS NECESSARY FOR THE PROPER AIR TEMPERATURE RISE FOR EACH INSTALLATION.**
3. Shaded areas indicate that this airflow range is **BELOW THE RANGE ALLOWED FOR HEATING OPERATION. THESE AIRFLOW RANGES MAY ONLY BE USED FOR COOLING.**
4. Airflows over 1800 CFM require bottom return, two–side return, or bottom and side return. A minimum filter size of 20” x 25” (508 x 635 mm) is required.
5. For upflow applications, air entering from one side into both the side of the furnace and a return air base counts as a side and bottom return.
6. The “–” entry indicates an unstable operating condition.

MAXIMUM EQUIVALENT VENT LENGTH - FT. (M)

Table 1 – Maximum Equivalent Vent Length - Ft. (M)
0 to 4500 Ft. (0 to 1370 M) Altitude

NOTE: Maximum Equivalent Vent Length (MEVL) includes standard and concentric vent termination and does NOT include elbows. Use Table 2 - Deductions from Maximum Equivalent Vent Length to determine allowable vent length for each application.

Altitude FT (M)	Unit Size BTU/Hr	DIRECT VENT (2-PIPE) AND NON-DIRECT VENT (1-PIPE)									
		Vent Pipe Diameter (in.) [1]									
		1-1/2		2		2-1/2		3		4	
0 to 2000 (0 to 610)	40,000 [3]	50	(15.2)	210	(64.0)	250	(76.2)	NA [2]		NA	
	60,000	30	(9.1)	135	(41.1)	235	(71.6)	265	(80.8)	NA	
	80,000	20	(6.1)	70	(21.3)	175	(53.3)	235	(71.6)	265	(80.8)
	100,000	NA		25	(7.6)	110	(33.5)	235	(71.6)	265	(80.8)
	120,000	NA		NA		15	(4.6)	100	(30.5)	250	(76.2)
	140,000 [4]	NA		NA		10	(3.0)	90	(27.4)	210	(64.0)
2001 to 3000 (610 to 914)	40,000	45	(13.7)	198	(60.4)	232	(70.7)	NA		NA	
	60,000	27	(8.2)	127	(38.7)	222	(67.7)	250	(76.2)	NA	
	80,000	17	(5.2)	64	(19.5)	165	(50.3)	222	(67.7)	249	(75.9)
	100,000	NA		22	(6.7)	104	(31.7)	223	(68.0)	250	(76.2)
	120,000	NA		NA		11	(3.4)	93	(28.3)	237	(72.2)
	140,000 [4]	NA		NA		NA		80	(24.4)	185	(56.4)
3001 to 4000 (914 to 1219)	40,000	39	(11.9)	184	(56.1)	214	(65.2)	NA		NA	
	60,000	23	(7.0)	119	(36.3)	210	(64.0)	235	(71.6)	NA	
	80,000	15	(4.6)	59	(18.0)	155	(47.2)	210	(64.0)	232	(70.7)
	100,000	NA		19	(5.8)	98	(29.9)	211	(64.3)	236	(71.9)
	120,000	NA		NA		8	(2.4)	86	(26.2)	224	(68.3)
	140,000 [4]	NA		NA		NA		79	(24.1)	158	(48.2)
4001 to 4500 (1219 to 1370)	40,000	36	(11.0)	177	(53.9)	205	(62.5)	NA		NA	
	60,000	21	(6.4)	115	(35.1)	204	(62.2)	228	(69.5)	NA	
	80,000	14	(4.3)	56	(17.1)	150	(45.7)	202	(61.6)	224	(68.3)
	100,000	NA		17	(5.2)	94	(28.7)	205	(62.5)	229	(69.8)
	120,000	NA		NA		NA		83	(25.3)	217	(66.1)
	140,000 [4]	NA		NA		NA		69	(21.0)	146	(44.5)

NOTES: See notes at end of venting tables.
See Table 3 for altitudes over 4500 ft. (1370 M)

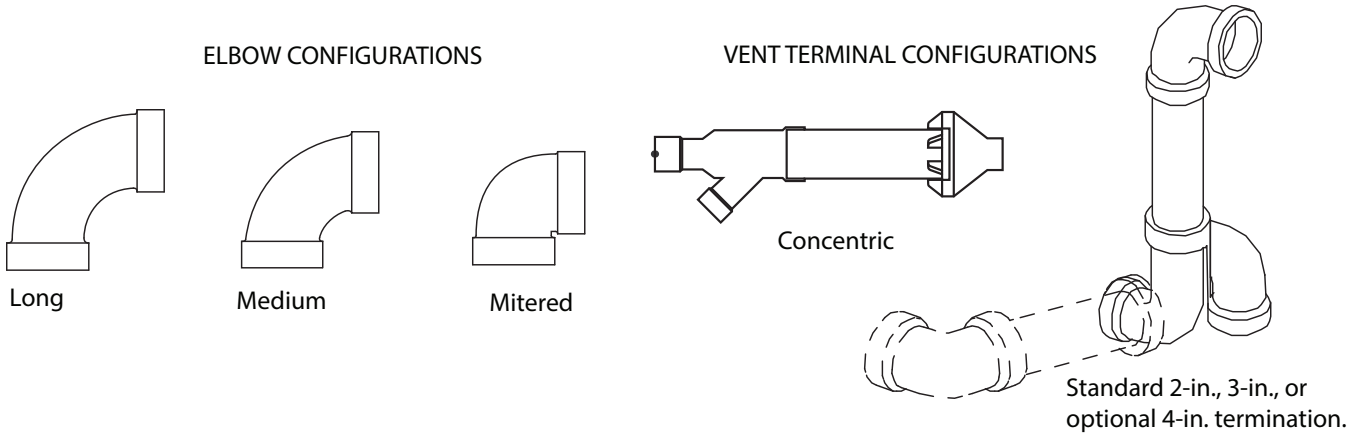

Table 2 – Deductions from Maximum Equivalent Vent Length - Ft. (M)

Pipe Diameter (in):	1-1/2		2		2-1/2		3		4	
Mitered 90° Elbow	8	(2.4)	8	(2.4)	8	(2.4)	8	(2.4)	8	(2.4)
Medium Radius 90° Elbow	5	(1.5)	5	(1.5)	5	(1.5)	5	(1.5)	5	(1.5)
Long Radius 90° Elbow	3	(0.9)	3	(0.9)	3	(0.9)	3	(0.9)	3	(0.9)
Mitered 45° Elbow	4	(1.2)	4	(1.2)	4	(1.2)	4	(1.2)	4	(1.2)
Medium Radius 45° Elbow	2.5	(0.8)	2.5	(0.8)	2.5	(0.8)	2.5	(0.8)	2.5	(0.8)
Long Radius 45° Elbow	1.5	(0.5)	1.5	(0.5)	1.5	(0.5)	1.5	(0.5)	1.5	(0.5)
Tee	16	(4.9)	16	(4.9)	16	(4.9)	16	(4.9)	16	(4.9)
Concentric Vent Termination	NA		0	(0.0)	NA		0	(0.0)	NA	
Standard Vent Termination	0	(0.0)	0	(0.0)	0	(0.0)	0	(0.0)	0	(0.0)

Venting System Length Calculations

The Total Equivalent Vent Length (TEVL) for **EACH** combustion air or vent pipe equals the length of the venting system, plus the equivalent length of elbows used in the venting system from Table 2.

Standard vent terminations or factory accessory concentric vent terminations count for zero deduction.

See vent system manufacturer's data for equivalent lengths of flexible vent pipe or other termination systems. **DO NOT ASSUME** that one foot of flexible vent pipe equals one foot of straight PVC/ABS DWV vent pipe.

Compare the Total Equivalent Vent Length to the Maximum Equivalent Vent Lengths in Tables 1 and 3.

Example 1

A direct-vent 60,000 Btuh furnace installed at 2100 ft. (640 M). Venting system includes, **FOR EACH PIPE**, 100 feet (30 M) of vent pipe, 95 feet (28 M) of combustion air inlet pipe, (3) 90° long radius elbows, (2) 45° long radius elbows and a factory accessory concentric vent kit.

Can this application use 2-in. (50 mm ND) PVC/ABS DWV vent piping?

Measure the required linear length of air inlet and vent pipe; insert the longest of the two here:					100 ft	Use length of the longer of the vent or air inlet piping system
Add equiv length of (3) 90° long-radius elbows (use the highest number of elbows for either the vent or inlet pipe)	3	x	3 ft	=	9 ft.	From Table 2
Add equiv length of (2) 45° long-radius elbows (use the highest number of elbows for either the vent or inlet pipe)	2	x	1.5 ft	=	3 ft.	From Table 2
Add equiv length of vent termination					0 ft.	From Table 2
Add correction for flexible vent pipe, if any					0 ft.	From Vent Manufacturer's instructions; zero for PVC/ABS DWV
Total Equivalent Vent Length (TEVL)					112 ft.	Add all of the above lines
Maximum Equivalent Vent Length (MEVL)					127 ft.	For 2" pipe from Table 1
Is TEVL less than MEVL?					**YES**	**Therefore, 2" pipe may be used**

Example 2

A direct-vent 60,000 Btuh furnace installed at 2100 ft. (640 M) Venting system includes, **FOR EACH PIPE**, 100 feet (30 M) of vent pipe, 95 feet (28 M) of combustion air inlet pipe, (3) 90° long radius elbows, and a polypropylene concentric vent kit. Also includes 20 feet (6.1 M) of flexible polypropylene vent pipe, included within the 100 feet (30 M) of vent pipe.

Assume that one meter of flexible 60 mm or 80 mm polypropylene pipe equals 1.8 meters of PVC/ABS pipe. **VERIFY FROM VENT MANUFACTURER'S INSTRUCTIONS.**

Can this application use 60 mm (O.D.) polypropylene vent piping? If not what size piping can be used?

Measure the required linear length of air inlet and vent pipe; insert the longest of the two here:					100 ft	Use length of the longer of the vent or air inlet piping system
Add equiv length of (3) 90° long-radius elbows (use the highest number of elbows for either the vent or inlet pipe)	3	x	3 ft	=	9 ft.	From Vent Manufacturer's instructions
Add equiv length of (2) 45° long-radius elbows (use the highest number of elbows for either the vent or inlet pipe)	0	x		=	0 ft.	From Vent Manufacturer's instructions
Add equiv length of vent termination	9 M	x	3 ft/M	=	18 ft.	From Vent Manufacturer's instructions
Add correction for flexible vent pipe, if any	1.8	x	20 ft	=	36 ft.	From Vent Manufacturer's instructions
Total Equivalent Vent Length (TEVL)					163 ft.	Add all of the above lines
Maximum Equivalent Vent Length (MEVL)					127 ft.	For 2" pipe from Table 1
Is TEVL less than MEVL?					**NO**	**Therefore, 60mm pipe may NOT be used; try 80 mm**
Maximum Equivalent Vent Length (MEVL)					250 ft.	For 3" pipe from Table 1
Is TEVL less than MEVL?					**YES**	**Therefore, 80 mm pipe may be used**

MAXIMUM EQUIVALENT VENT LENGTH - FT. (M) (CONTINUED)

Table 3 – Maximum Equivalent Vent Length - Ft. (M)
4501 to 10,000 Ft. (0 to 1370 M) Altitude

NOTE: Maximum Equivalent Vent Length (MEVL) includes standard and concentric vent termination and does NOT include elbows. Use Table 2 - Deductions from Maximum Equivalent Vent Length to determine allowable vent length for each application.

Altitude FT (M) [5]	Unit Size	DIRECT VENT (2-PIPE) AND SINGLE-PIPE									
		Vent Pipe Diameter (in.) [1]									
		1-1/2		2		2-1/2		3		4	
4501 to 5000 (1370 to 1524)	40,000	33	(10.1)	171	(52.1)	196	(59.7)	NA [2]		NA	
	60,000	20	(6.1)	111	(33.8)	198	(60.4)	221	(67.4)	NA	
	80,000	13	(4.0)	54	(16.5)	146	(44.5)	195	(59.4)	216	(65.8)
	100,000	NA		16	(4.9)	91	(27.7)	200	(61.0)	222	(67.7)
	120,000	NA		NA		NA		80	(24.4)	211	(64.3)
	140,000 [4]	NA		NA		NA		60	(18.3)	134	(40.8)
5001 to 6000 (1524 to 1829)	40,000	27	(8.2)	158	(48.2)	179	(54.6)	NA		NA	
	60,000	16	(4.9)	103	(31.4)	186	(56.7)	207	(63.1)	NA	
	80,000	11	(3.4)	49	(14.9)	137	(41.8)	183	(55.8)	200	(61.0)
	100,000	NA		12	(3.7)	85	(25.9)	188	(57.3)	208	(63.4)
	120,000	NA		NA		NA		74	(22.6)	199	(60.7)
	140,000 [4]	NA		NA		NA		50	(15.2)	109	(33.2)
6001 to 7000 (1829 to 2134)	40,000	21	(6.4)	145	(44.2)	162	(49.4)	NA		NA	
	60,000	13	(4.0)	96	(29.3)	174	(53.0)	194	(59.1)	NA	
	80,000	NA		44	(13.4)	120	(36.6)	171	(52.1)	185	(56.4)
	100,000	NA		10	(3.0)	79	(24.1)	178	(54.3)	195	(59.4)
	120,000	NA		NA		NA		68	(20.7)	187	(57.0)
	140,000 [4]	NA		NA		NA		41	(12.5)	87	(26.5)
7001 to 8000 (2134 to 2438)	40,000	15	(4.6)	133	(40.5)	146	(44.5)	NA		NA	
	60,000	10	(3.0)	89	(27.1)	163	(49.7)	181	(55.2)	NA	
	80,000	NA		40	(12.2)	120	(36.6)	159	(48.5)	170	(51.8)
	100,000	NA		NA		73	(22.3)	167	(50.9)	182	(55.5)
	120,000	NA		NA		NA		62	(18.9)	175	(53.3)
	140,000 [4]	NA		NA		NA		32	(9.8)	63	(19.2)
8001 to 9000 (2438 to 2743)	40,000	10	(3.0)	121	(36.9)	130	(39.6)	NA		NA	
	60,000	7	(2.1)	82	(25.0)	152	(46.3)	168	(51.2)	NA	
	80,000	NA		35	(10.7)	111	(33.8)	148	(45.1)	156	(47.5)
	100,000	NA		NA		67	(20.4)	157	(47.9)	170	(51.8)
	120,000	NA		NA		NA		56	(17.1)	164	(50.0)
	140,000 [4]	NA		NA		NA		23	(7.0)	42	(12.8)
9001 to 10,000 (2743 to 3048)	40,000	5	(1.5)	110	(33.5)	115	(35.1)	NA		NA	
	60,000	NA		76	(23.2)	142	(43.3)	156	(47.5)	NA	
	80,000	NA		31	(9.4)	103	(31.4)	137	(41.8)	142	(43.3)
	100,000	NA		NA		62	(18.9)	147	(44.8)	157	(47.9)
	120,000	NA		NA		NA		51	(15.5)	153	(46.6)
	140,000 [4]	NA		NA		NA		16	(4.9)	20	(6.1)

NOTES:
1. Use only the vent pipe sizes shown for each furnace. It is NOT necessary to choose the smallest diameter pipe possible for venting.
2. NA – Not allowed. Pressure switch will not close, or flame disturbance may result.
3. Total equivalent vent lengths under 10' for 40,000 BTUH furnaces from 0 to 2000 ft. (0 to 610 M) above sea level require use of an outlet choke plate . **Failure to use an outlet choke when required may result in flame disturbance or flame sense lockout.**
4. Not all furnace families include 140,000 BTUH input models.
5. Vent sizing for Canadian installations over 4500 ft (1370 M) above sea level are subject to acceptance by local authorities having jurisdiction.
6. Size both the combustion air and vent pipe independently, then use the larger size for both pipes.
7. Assume the two 45° elbows equal one 90° elbow. Wide radius elbows are desirable and may be required in some cases.
8. Elbow and pipe sections within the furnace casing and at the vent termination should not be included in vent length or elbow count.
9. The minimum pipe length is 5 ft. (1.5 M) linear feet (meters) for all applications.
10. Use 3–in. (76 mm) diameter vent termination kit for installations requiring 4–in. (102 mm) diameter pipe.

MAXIMUM ALLOWABLE EXPOSED VENT LENGTHS INSULATION TABLE - FT. (M)

Maximum Length of Uninsulated and Insulated Vent Pipe-Ft (M)																	
Single Stage Furnace Input	Winter Design Temp ° F (° C)	Pipe Length in Ft. & M	No Insulation					3/8-in. (9.5 mm) Insulation					1/2-in. (12.7 mm) Insulation				
			Pipe Diameter-inches (mm)					Pipe Diameter-inches (mm)					Pipe Diameter-inches (mm)				
			1 1/2	2	2 1/2	3	4	1 1/2	2	2 1/2	3	4	1 1/2	2	2 1/2	3	4
			(38)	(51)	(64)	(76)	(102)	(38)	(51)	(64)	(76)	(102)	(38)	(51)	(64)	(76)	(102)
40000	20 (-10)	Ft.	48	42	42	N/A	N/A	50	122	111	N/A	N/A	50	144	130	N/A	N/A
		M	14.6	12.8	12.8	N/A	N/A	15.2	37.2	33.8	N/A	N/A	15.2	43.9	39.6	N/A	N/A
	0 (-20)	Ft.	25	19	17	N/A	N/A	50	75	66	N/A	N/A	50	90	79	N/A	N/A
		M	7.6	5.8	5.2	N/A	N/A	15.2	22.9	20.1	N/A	N/A	15.2	27.4	24.1	N/A	N/A
	-20 (-30)	Ft.	14	7	5	N/A	N/A	50	52	45	N/A	N/A	50	64	55	N/A	N/A
		M	4.3	2.1	1.5	N/A	N/A	15.2	15.8	13.7	N/A	N/A	15.2	19.5	16.8	N/A	N/A
	-40 (-40)	Ft.	7	0	0	N/A	N/A	50	38	31	N/A	N/A	50	48	40	N/A	N/A
		M	2.1	0.0	0.0	N/A	N/A	15.2	11.6	9.4	N/A	N/A	15.2	14.6	12.2	N/A	N/A
60000	20 (-10)	Ft.	30	61	61	54	N/A	30	135	163	142	N/A	30	135	191	166	N/A
		M	9.1	18.6	18.6	16.5	N/A	9.1	41.1	49.7	43.3	N/A	9.1	41.1	58.2	50.6	N/A
	0 (-20)	Ft.	30	31	30	23	N/A	30	113	100	85	N/A	30	135	120	101	N/A
		M	9.1	9.4	9.1	7.0	N/A	9.1	34.4	30.5	25.9	N/A	9.1	41.1	36.6	30.8	N/A
	-20 (-30)	Ft.	24	17	15	7	N/A	30	81	70	57	N/A	30	98	85	70	N/A
		M	7.3	5.2	4.6	2.1	N/A	9.1	24.7	21.3	17.4	N/A	9.1	29.9	25.9	21.3	N/A
	-40 (-40)	Ft.	15	8	5	0	N/A	30	61	52	40	N/A	30	75	64	51	N/A
		M	4.6	2.4	1.5	0.0	N/A	9.1	18.6	15.8	12.2	N/A	9.1	22.9	19.5	15.5	N/A
80000	20 (-10)	Ft.	20	70	78	70	60	20	70	175	183	154	20	70	175	215	181
		M	6.1	21.3	23.8	21.3	18.3	6.1	21.3	53.3	55.8	46.9	6.1	21.3	53.3	65.5	55.2
	0 (-20)	Ft.	20	42	41	33	21	20	70	132	111	89	20	70	157	133	107
		M	6.1	12.8	12.5	10.1	6.4	6.1	21.3	40.2	33.8	27.1	6.1	21.3	47.9	40.5	32.6
	-20 (-30)	Ft.	20	25	23	14	1	20	70	94	77	57	20	70	113	94	71
		M	6.1	7.6	7.0	4.3	0.3	6.1	21.3	28.7	23.5	17.4	6.1	21.3	34.4	28.7	21.6
	-40 (-40)	Ft.	20	14	12	3	0	20	70	71	56	38	20	70	86	70	50
		M	6.1	4.3	3.7	0.9	0.0	6.1	21.3	21.6	17.1	11.6	6.1	21.3	26.2	21.3	15.2
100000	20 (-10)	Ft.	N/A	25	99	89	78	N/A	25	110	233	265	N/A	25	110	235	229
		M	N/A	7.6	30.2	27.1	23.8	N/A	7.6	33.5	71.0	80.8	N/A	7.6	33.5	71.6	69.8
	0 (-20)	Ft.	N/A	25	55	46	33	N/A	25	110	145	117	N/A	25	110	173	140
		M	N/A	7.6	16.8	14.0	10.1	N/A	7.6	33.5	44.2	35.7	N/A	7.6	33.5	52.7	42.7
	-20 (-30)	Ft.	N/A	25	34	24	11	N/A	25	110	103	79	N/A	25	110	124	97
		M	N/A	7.6	10.4	7.3	3.4	N/A	7.6	33.5	31.4	24.1	N/A	7.6	33.5	37.8	29.6
	-40 (-40)	Ft.	N/A	23	20	11	0	N/A	25	95	77	55	N/A	25	110	94	70
		M	N/A	7.0	6.1	3.4	0.0	N/A	7.6	29.0	23.5	16.8	N/A	7.6	33.5	28.7	21.3
120000	20 (-10)	Ft.	N/A	N/A	15	99	86	N/A	N/A	15	100	219	N/A	N/A	15	100	250
		M	N/A	N/A	4.6	30.2	26.2	N/A	N/A	4.6	30.5	66.8	N/A	N/A	4.6	30.5	76.2
	0 (-20)	Ft.	N/A	N/A	15	51	38	N/A	N/A	15	100	130	N/A	N/A	15	100	156
		M	N/A	N/A	4.6	15.5	11.6	N/A	N/A	4.6	30.5	39.6	N/A	N/A	4.6	30.5	47.5
	-20 (-30)	Ft.	N/A	N/A	15	28	14	N/A	N/A	15	100	88	N/A	N/A	15	100	108
		M	N/A	N/A	4.6	8.5	4.3	N/A	N/A	4.6	30.5	26.8	N/A	N/A	4.6	30.5	32.9
	-40 (-40)	Ft.	N/A	N/A	15	14	0	N/A	N/A	15	85	62	N/A	N/A	15	100	79
		M	N/A	N/A	4.6	4.3	0.0	N/A	N/A	4.6	25.9	18.9	N/A	N/A	4.6	30.5	24.1
140000	20 (-10)	Ft.	N/A	N/A	10	90	99	N/A	N/A	10	90	210	N/A	N/A	10	90	210
		M	N/A	N/A	3.0	27.4	30.2	N/A	N/A	3.0	27.4	64.0	N/A	N/A	3.0	27.4	64.0
	0 (-20)	Ft.	N/A	N/A	10	61	47	N/A	N/A	10	90	153	N/A	N/A	10	90	183
		M	N/A	N/A	3.0	18.6	14.3	N/A	N/A	3.0	27.4	46.6	N/A	N/A	3.0	27.4	55.8
	-20 (-30)	Ft.	N/A	N/A	10	35	21	N/A	N/A	10	90	104	N/A	N/A	10	90	128
		M	N/A	N/A	3.0	10.7	6.4	N/A	N/A	3.0	27.4	31.7	N/A	N/A	3.0	27.4	39.0
	-40 (-40)	Ft.	N/A	N/A	10	20	NA	N/A	N/A	10	90	75	N/A	N/A	10	90	94
		M	N/A	N/A	3.0	6.1	NA	N/A	N/A	3.0	27.4	22.9	N/A	N/A	3.0	27.4	28.7

*Not all families have these models.

RETURN AIR TEMPERATURE

This furnace is designed for continuous return-air minimum temperature of 60°F (15°C) db or intermittent operation down to 55°F (13°C) db such as when used with a night setback thermometer. Return-air temperature must not exceed 80°F (27°C) db. Failure to follow these return air limits may affect reliability of heat exchangers, motors and controls.

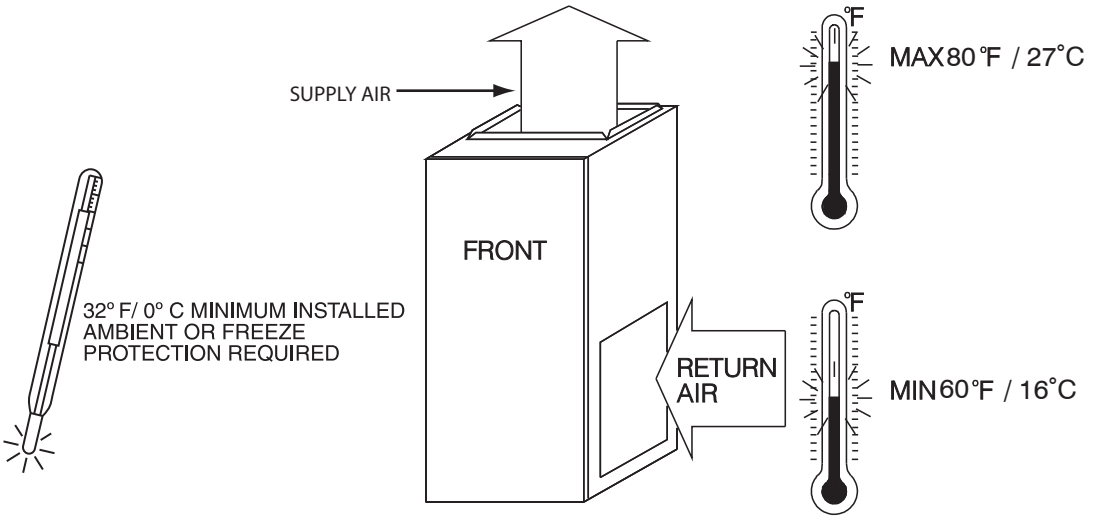

A10490

MINIMUM CLEARANCES TO COMBUSTIBLE MATERIALS

POSITION	CLEARANCE
Rear	0 (0 mm)
Front (Combustion air openings in furnace and in structure)	1 in. (25 mm)
Required for service**	24 in. (610 mm)*
All Sides of Supply Plenum**	1 in. (25 mm)
Sides	0 (0 mm)
Vent	0 (0 mm)
Top of Furnace	1 in. (25 mm)

* Recommended
**Consult your local building codes

COMBUSTION-AIR PIPE FOR NON-DIRECT (1-PIPE) VENT APPLICATION

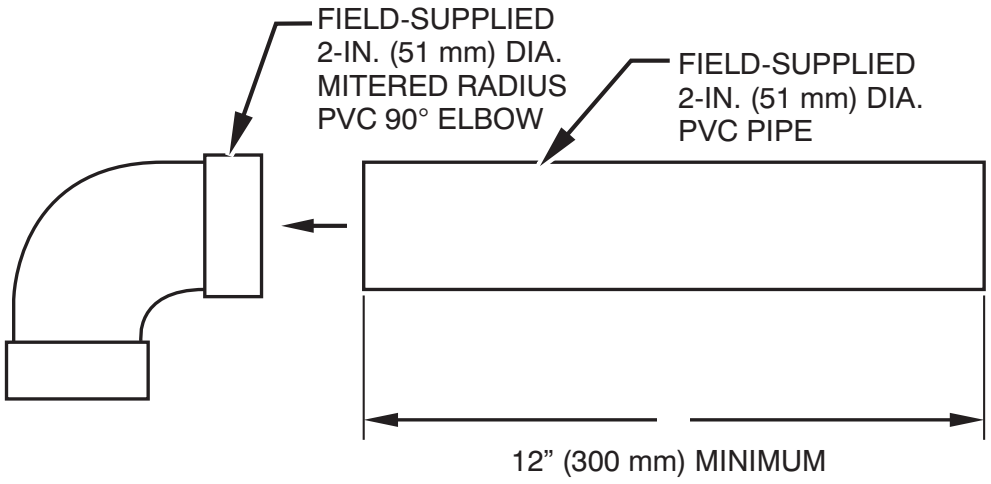

A12376

NOTE: See Installation Instructions for specific venting configurations.

925SA

DOWNFLOW SUBBASE

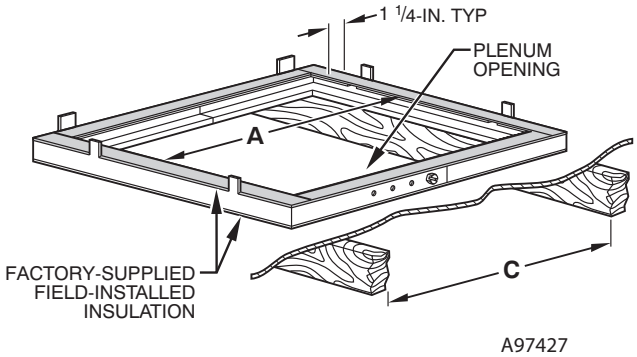

Assembled

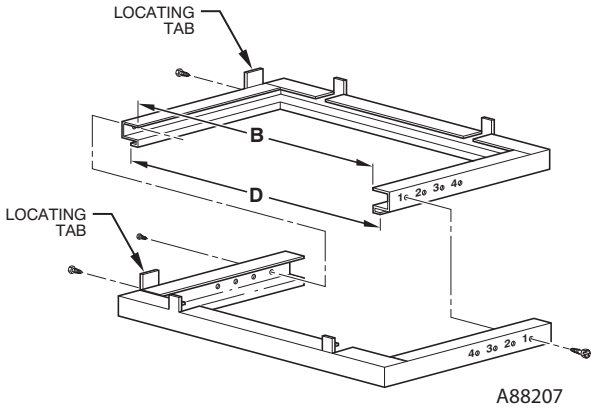

Disassembled

925SA

DIMENSIONS (IN. / MM)						
FURNACE CASING WIDTH	FURNACE IN DOWNFLOW APPLICATION	PLENUM OPENING*		FLOOR OPENING		HOLE NO. FOR WIDTH ADJUSTMENT
		A	B	C	D	
14–3/16 (360)	Furnace with or without Cased Coil Assembly or Coil Box	11–3/16 (322)	19 (483)	13–7/16 (341)	20–5/8 (600)	4
17–1/2 (445)	Furnace with or without Cased Coil Assembly or Coil Box	15–1/8 (384)	19 (483)	16–3/4 (426)	20–5/8 (600)	3
21 (533)	Furnace with or without Cased Coil Assembly or Coil Box	18–5/8 (396)	19 (483)	20–1/4 (514)	20–5/8 (600)	2
24–1/2 (622)	Furnace with or without Cased Coil Assembly or Coil Box	22–1/8 (562)	19 (483)	23–3/4 (603)	20–5/8 (600)	1

*The plenum should be constructed 1/4–in. (6 mm) smaller in width and depth than the plenum dimensions shown above.

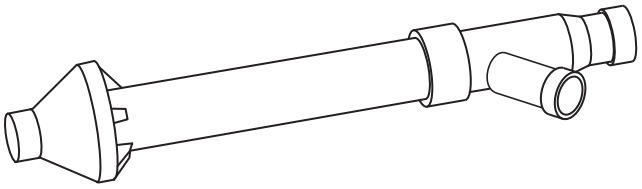

Concentric Vent Kit

A93086

A concentric vent kit allows vent and combustion-air pipes to terminate through a single exit in a roof or side wall. One pipe runs inside the other allowing venting through the inner pipe and combustion air to be drawn in through the outer pipe.

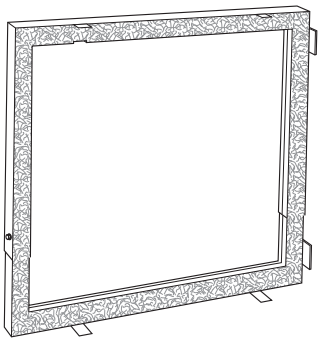

Downflow Subbase

A88202

One base fits all furnace sizes. The base is designed to be installed between the furnace and a combustible floor when no coil box is used or when a coil box other than a Bryant cased coil is used. It is CSA design certified for use with Bryant branded furnaces when installed in downflow applications.

MEDIA FILTER CABINET

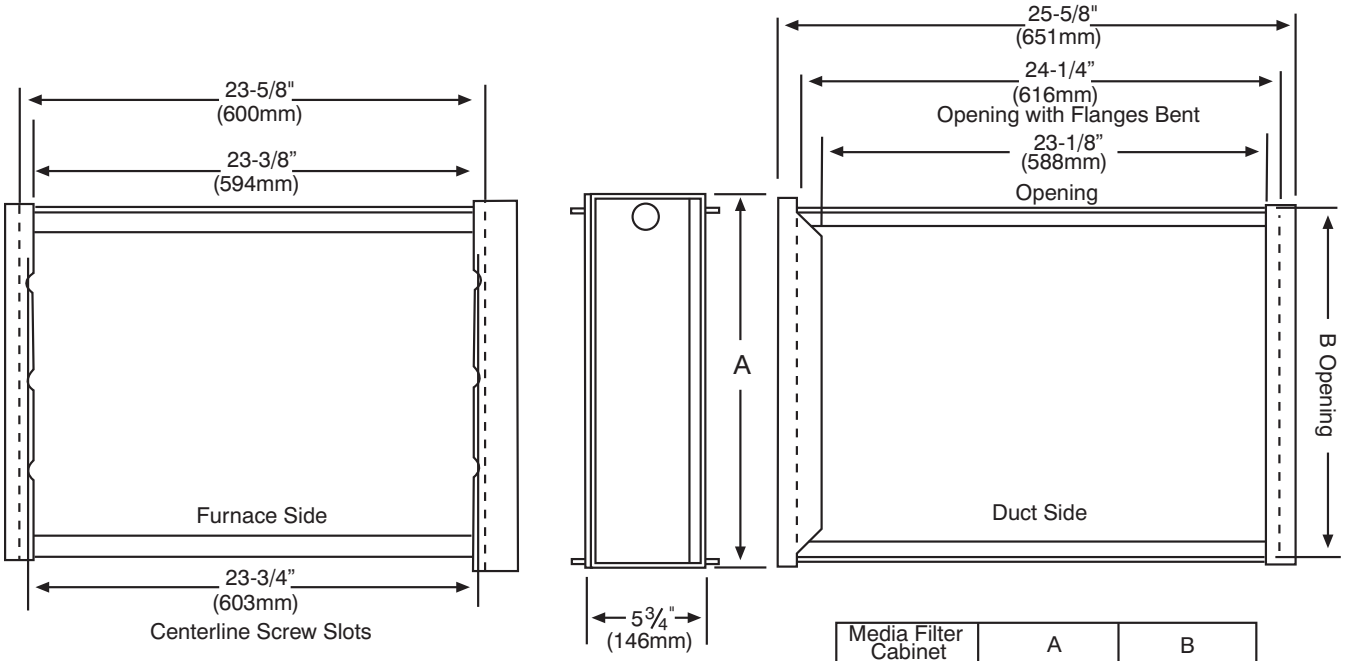

Media Filter Cabinet	A	B
16" (406mm)	17" (432mm)	16" (406mm)
20" (508mm)	21" (533mm)	20" (508mm)
24" (610mm)	25" (635mm)	24" (610mm)

NOTE: Media cabinet is matched to the bottom opening on furnace. May also be used for side return.

A12428

925SA

TYPICAL WIRING SCHEMATIC

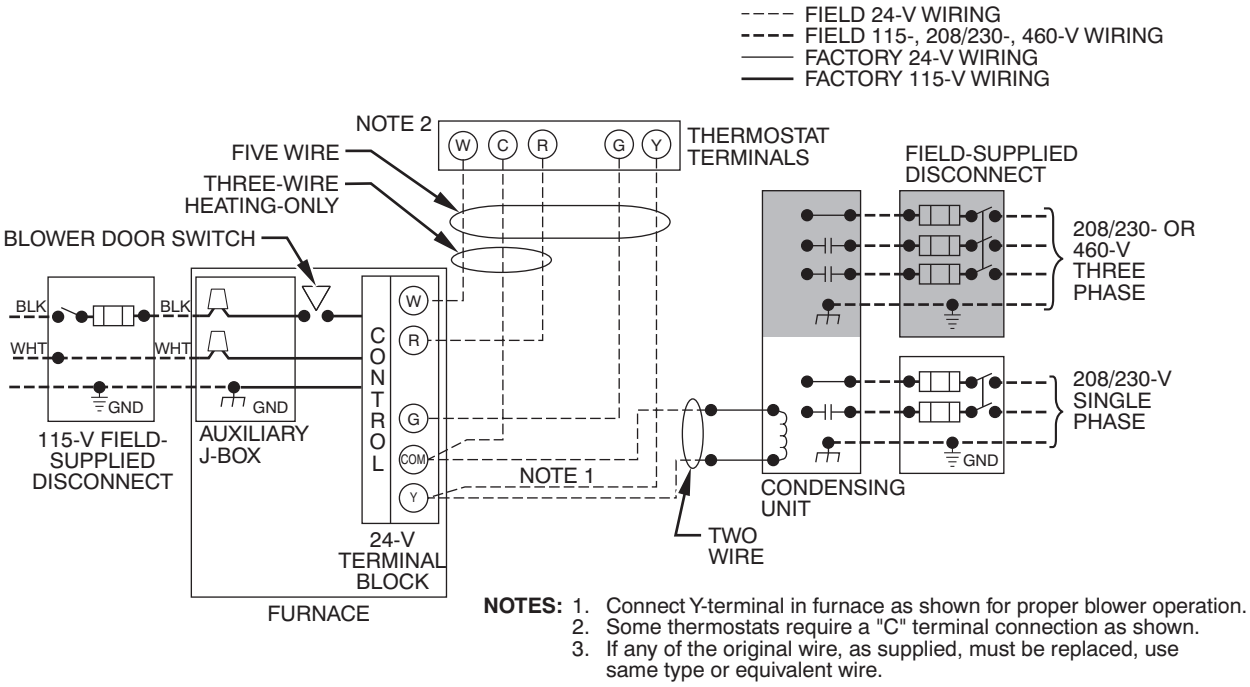

NOTES: 1. Connect Y-terminal in furnace as shown for proper blower operation.
2. Some thermostats require a "C" terminal connection as shown.
3. If any of the original wire, as supplied, must be replaced, use same type or equivalent wire.

A11387

DIMENSIONAL DRAWING

NOTES:
1. Doors may vary by model.
2. Minimum return-air openings at furnace, based on metal duct. If flex duct is used, see flex duct manufacturer's recommendations for equivalent diameters.
   a. For 800 CFM-16-in. (406 mm) round or 14 1/2 x 12-in. (368 x 305 mm) rectangle.
   b. For 1200 CFM-20-in. (508 mm) round or 14 1/2 x 19 1/2-in. (368 x 495 mm) rectangle.
   c. For 1600 CFM-22-in. (559 mm) round or 14 1/2 x 22 1/16-in. (368 x 560mm) rectangle.
   d. Return air above 1800 CFM at 0.5 in. w.c. ESP on 24.5" casing, requires one of the following configurations: 2 sides, 1 side and a bottom or bottom only. See Air Delivery table in this document for specific use to allow for sufficient airflow to the furnace.
3. Vent and Combustion air pipes through blower compartment must use accessory "Vent Kit - Through the Cabinet". See accessory list for current part number.

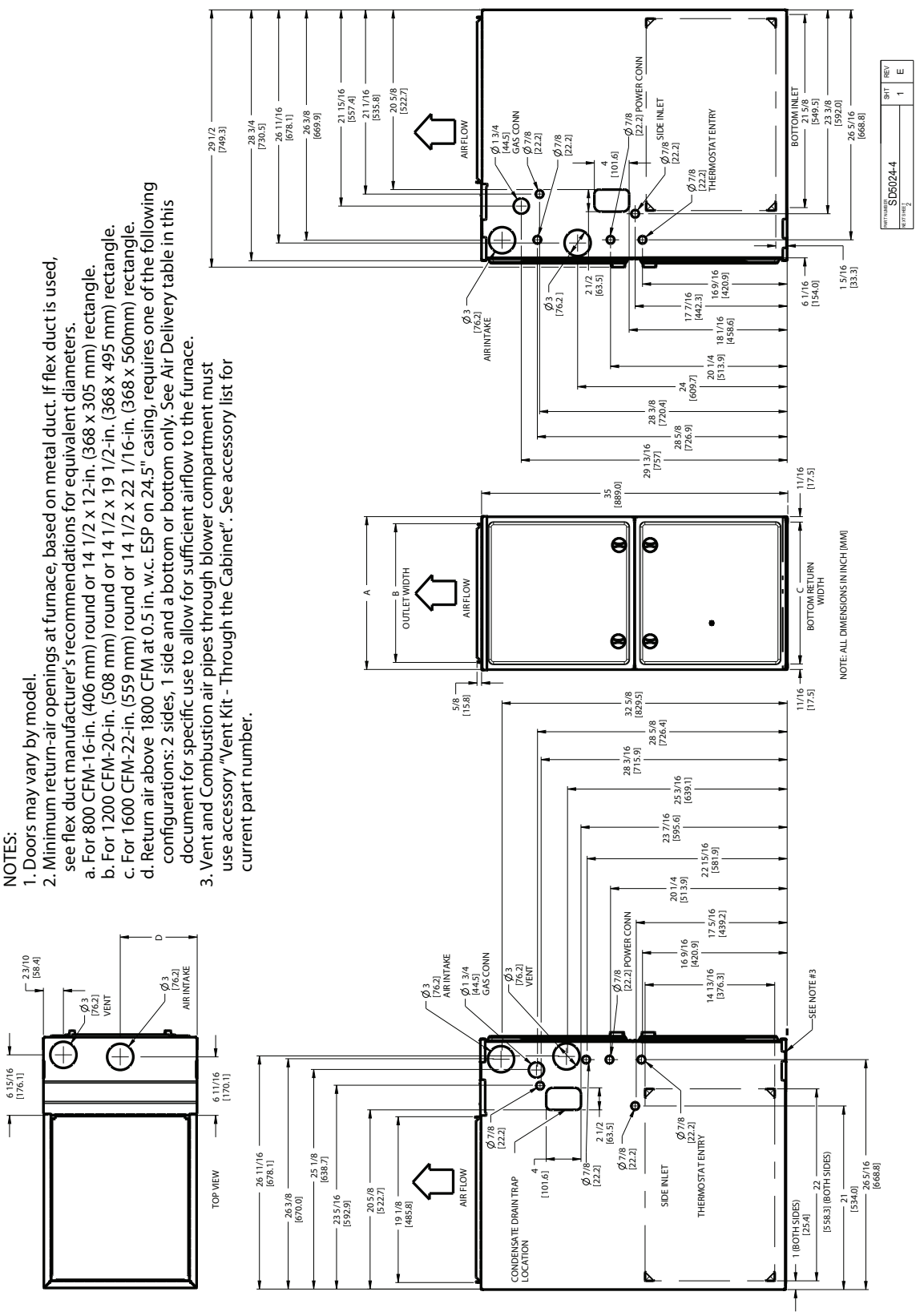

925SA FURNACE SIZE	A CABINET WIDTH	B OUTLET WIDTH	C BOTTOM INLET WIDTH	D AIR INTAKE	SHIP WT. LB (KG)
30040	14 – 3/16 (361)	12 – 1/2 (319)	12 – 9/16 (322)	7 – 1/8 (181)	120.0 (54.4)
36060					130.5 (59.2)
36040	17 – 1/2 (445)	15 – 7/8 (403)	16 (406)	8 – 3/4 (222)	131.0 (59.4)
42060					141.0 (64.0)
48080					145.0 (65.8)
60080	21 (533)	19 – 3/8 (492)	19 – 1/2 (495)	10 – 1/2 (267)	155.5 (70.5)
60100					156.5 (71.0)
66120	24 – 1/2 (622)	22 – 7/8 (581)	23 (584)	12 – 1/4 (311)	189.5 (86.0)

GUIDE SPECIFICATIONS

General

System Description

Furnish a _____ 4-way multipoise gas-fired condensing furnace for use with natural gas or propane (factory-authorized conversion kit required for propane); furnish external media cabinet for use with accessory media filter or standard filter.

Quality Assurance

Unit will be designed, tested and constructed to the current ANSI Z 21.47/CSA 2.3 design standard for gas-fired central furnaces.

Unit will be third party certified by CSA to the current ANSI Z 21.47/CSA 2.3 design standard for gas-fired central furnaces. Unit will carry the CSA Blue Star® and Blue Flame® labels. Unit efficiency testing will be performed per the current DOE test procedure as listed in the Federal Register.

Unit will be certified for capacity and efficiency and listed in the latest AHRI Consumer's Directory of Certified Efficiency Ratings.

Unit will carry the current Federal Trade Commission Energy Guide efficiency label.

Delivery, Storage, and Handling

Unit will be shipped as single package only and is stored and handled per unit manufacturer's recommendations.

Warranty (for inclusion by specifying engineer)

U.S. and Canada only. Warranty certificate available upon request.

Equipment

Blower Wheel and ECM Blower Motor

Galvanized blower wheel shall be centrifugal type, statically and dynamically balanced. Blower motor of ECM type shall be permanently lubricated with sealed ball bearings, of _____hp, and have multiple speeds from 600-1200 RPM operating only when 24-VAC motor inputs are provided. Blower motor shall be direct drive and soft mounted to the blower housing to reduce vibration transmission.

Filters

Furnace shall have reusable-type filters. Filter shall be _____ in. (mm) X _____ in. (mm). An accessory highly efficient Media Filter is available as an option. _____ Media Filter.

Casing

Casing shall be of .030 in. thickness minimum, pre-painted galvanized steel.

Draft Inducer Motor

Draft inducer motor shall be single-speed PSC design.

Primary Heat Exchangers

Primary heat exchangers shall be 3-Pass corrosion-resistant aluminized steel of fold-and-crimp sectional design and applied operating under negative pressure.

Secondary Heat Exchangers

Secondary heat exchangers shall be of a stainless steel flow-through of fin-and-tube design and applied operating under negative pressure.

Controls

Controls shall include a micro-processor-based integrated electronic control board with at least 16 service troubleshooting codes displayed via diagnostic flashing LED light on the control, a self-test feature that checks all major functions of the furnace, and a replaceable automotive-type circuit protection fuse. Multiple operational settings available, including blower speeds for high heat, low cooling, high cooling. Continuous fan speed may be adjusted from the thermostat.

Operating Characteristics

Heating capacity shall be _____ Btuh input; _____ Btuh output capacity.

Fuel Gas Efficiency shall be _____AFUE.

Air delivery shall be _____ cfm minimum at 0.50 in. wc. external static pressure.

Dimensions shall be: depth_____in. (mm); width _____in. (mm); height_____in. (mm) (casing only). Height shall be _____in. (mm) with A/C coil and _____in. (mm) overall with plenum.

Electrical Requirements

Electrical supply shall be 115 volts, 60 Hz, single-phase (nominal). Minimum wire size shall be _____AWG; maximum fuse size of HACR-type designated circuit breaker shall be _____ amps.

Special Features

Refer to section of the product data identifying accessories and descriptions for specific features and available enhancements.

©2013 Bryant Heating & Cooling Systems ● 7310 W. Morris St. ● Indianapolis, IN 46231

Edition Date: 05/13

Catalog No. PDS925SA–05

Manufacturer reserves the right to discontinue, or change at any time, specifications or designs without notice and without incurring obligations.

Replaces: PDS925SA–04