538PR
Outdoor Unit Single Zone Ductless System
Sizes 09 to 30

bryant®

Service Manual

TABLE OF CONTENTS

	PAGE
SAFETY CONSIDERATIONS	1
INTRODUCTION	1
MODEL/SERIAL NUMBER NOMENCLATURES	2
SPECIFICATIONS	3
DIMENSIONS	4
CLEARANCES	7
PERFORMANCE	6
ELECTRICAL DATA	8
WIRING	8
CONNECTION DIAGRAMS	9
WIRING DIAGRAMS	10
FAN AND MOTOR SPECIFICATIONS	15
REFRIGERANT COIL SPECIFICATIONS	16
REFRIGERATION CYCLE DIAGRAMS	17
REFRIGERANT LINES	18
SYSTEM EVACUATION AND CHARGING	19
ELECTRONIC FUNCTION	20
TROUBLESHOOTING	21
DIAGNOSTIC GUIDES	23
DIAGNOSIS AND SOLUTION	29
APPENDIX	46
DISASSEMBLY INSTRUCTIONS	52

SAFETY CONSIDERATIONS

Installing, starting up, and servicing air−conditioning equipment can be hazardous due to system pressures, electrical components, and equipment location (roofs, elevated structures, etc.).

Only trained, qualified installers and service mechanics should install, start−up, and service this equipment.

Untrained personnel can perform basic maintenance functions such as cleaning coils. All other operations should be performed by trained service personnel. When working on the equipment, observe precautions in the literature and on tags, stickers, and labels attached to the equipment. Follow all safety codes. Wear safety glasses and work gloves. Keep quenching cloth and fire extinguisher nearby when brazing. Use care in handling, rigging, and setting bulky equipment. Read this manual thoroughly and follow all warnings or cautions included in literature and attached to the unit. Consult local building codes and National Electrical Code (NEC) for special requirements. Recognize safety information. This is the safety−alert symbol ⚠. When you see this symbol on the unit and in instructions or manuals, be alert to the potential for personal injury. Understand these signal words: **DANGER**, **WARNING**, and **CAUTION**.

These words are used with the safety−alert symbol. **DANGER** identifies the most serious hazards which **will** result in severe personal injury or death. **WARNING** signifies hazards which **could** result in personal injury or death. **CAUTION** is used to identify unsafe practices which **may** result in minor personal injury or product and property damage. **NOTE** is used to highlight suggestions which **will** result in enhanced installation, reliability, or operation.

⚠ WARNING

ELECTRICAL SHOCK HAZARD

Failure to follow this warning could result in personal injury or death.

Before installing, modifying, or servicing system, main electrical disconnect switch must be in the OFF position. There may be more than 1 disconnect switch. Lock out and tag switch with a suitable warning label.

⚠ WARNING

EXPLOSION HAZARD

Failure to follow this warning could result in death, serious personal injury, and/or property damage.

Never use air or gases containing oxygen for leak testing or operating refrigerant compressors. Pressurized mixtures of air or gases containing oxygen can lead to an explosion.

⚠ CAUTION

EQUIPMENT DAMAGE HAZARD

Failure to follow this caution may result in equipment damage or improper operation.

Do not bury more than 36 in. (914 mm) of refrigerant pipe in the ground. If any section of pipe is buried, there must be a 6 in. (152 mm) vertical rise to the valve connections on the outdoor units. If more than the recommended length is buried, refrigerant may migrate to the cooler buried section during extended periods of system shutdown. This causes refrigerant slugging and could possibly damage the compressor at start−up.

INTRODUCTION

This service manual provides the necessary information to service, repair, and maintain the outdoor units. Section 2 of this manual has an appendix with data required to perform troubleshooting. Use the Table of Contents to locate a desired topic.

MODEL/SERIAL NUMBER NOMENCLATURES

Table 1—Unit Sizes

SYSTEM TONS	VOLTAGE/PH/HZ	OUTDOOR MODEL
9	115/1/60	538PAQ009RBMA
12		538PAQ012RBMA
9	208–230/1/60	538PEQ009RBMA
12		538PEQ012RBMA
18		538PEQ018RBMA
24		538PEQ024RBMA
30		538PEQ030RBMA

OUTDOOR UNIT

538 P A Q 009 R B MA

538 = OUTDOOR UNIT

P = MODEL

VOLTAGE
A = 115/1/60
E = 208/230–1–60

SYSTEM TYPE
Q = HEAT PUMP

NOMINAL CAPACITY
009 – 3/4 TON
012 – 1 TON
018 – 1–1/2 TONS
024 – 2 TONS
030 – 2 **–1/2** TONS

MA = ALL MODELS

B = ALL MODELS

UNIT TYPE
R = OUTDOOR UNIT

01 16 V 10001

Week of Manufacture

Year of Manufacture

V = ALL MODELS

Sequential Serial Number

Use of the AHRI Certified TM Mark indicates a manufacturer's participation in the program For verification of certification for individual products, go to www.ahridirectory.org.

SPECIFICATIONS

Table 2—Specifications

System	SIZE		9	12	9	12	18	24	30
	Outdoor Model		**538PAQ009RBMA**	**538PAQ012RBMA**	**538PEQ009RBMA**	**538PEQ012RBMA**	**538PEQ018RBMA**	**538PEQ024RBMA**	**538PEQ030RBMA**
Electrical	Voltage, Phase, Cycle	V/Ph/Hz	115-1-60	115-1-60	208/230-1-60	208/230-1-60	208/230-1-60	208/230-1-60	208/230-1-60
	MCA	A.	15	15	15	15	13	15	20
	MOCP - Fuse Rating	A.	20	20	15	15	20	25	30
Operating Range	Cooling Outdoor DB Min - Max	°F (°C)	-4~122 (-20~50)	-4~122 (-20~50)	-4~122 (-20~50)	-4~122 (-20~50)	-4~122 (-20~50)	-4~122 (-20~50)	-4~122 (-20~50)
	Heating Outdoor DB Min - Max	°F (°C)	-4~86 (-20~30)	-4~86 (-20~30)	-4~86 (-20~30)	-4~86 (-20~30)	-4~86 (-20~30)	-4~86 (-20~30)	-4~86 (-20~30)
Piping	Total Piping Length	ft (m)	82 (25)	82 (25)	82 (25)	82 (25)	98 (30)	98 (30)	164 (50)
	Piping Lift*	ft (m)	32 (10)	32 (10)	32 (10)	32 (10)	65 (20)	65 (20)	82 (25)
	Pipe Connection Size - Liquid	in (mm)	1/4 (6.35)	1/4 (6.35)	1/4 (6.35)	1/4 (6.35)	1/4 (6.35)	3/8 (9.52)	3/8 (9.52)
	Pipe Connection Size - Suction	in (mm)	3/8 (9.52)	1/2 (12.7)	3/8 (9.52)	1/2 (12.7)	1/2 (12.7)	5/8 (16)	5/8 (16)
Refrigerant	Type		R410A	R410A	R410A	R410A	R410A	R410A	R410A
	Charge	lbs (kg)	2.76 (1.25)	2.76 (1.25)	2.76 (1.25)	2.76 (1.25)	4.19 (1.9)	5.18 (2.35)	6.62 (3.0)
	Metering Device		EEV	EEV	EEV	EEV	EEV	Capillary Tube	Capillary Tube
Outdoor Coil	Face Area	Sq. Ft.	9.2	9.2	9.2	9.2	16.0	21.1	17.2
	No. Rows		2	2	2	2	2	3	3
	Fins per inch		21	21	21	21	18	18	17
	Circuits		4	4	4	4	6	8	6
Compressor	Type		Rotary Inverter	Rotary Inverter	Rotary Inverter	Rotary Inverter	Rotary Inverter	Rotary Inverter	Rotary Inverter
	Model		ASM98D1UFZA	ASM108D1UFZA	ASM98D1UFZA	ASM108D1UFZA	ASM135D23UFZ	DA250S2C-30MT	TNB306FPGMC-L
	Oil Type		VG74	VG74	VG74	VG74	VG74	VG74	FV50S
	Oil Charge	Fl. Oz.	12.5	12.5	12.5	12.5	15.2	27.7	36.2
	Rated Current	RLA	5.3	5.7	5.3	5.7	7.3	8.8	13.5
Outdoor	Unit Width	in (mm)	31.89 (810)	31.89 (810)	31.89 (810)	31.89 (810)	33.27 (845)	37.20 (945)	37.20 (945)
	Unit Height	in (mm)	21.97 (558)	21.97 (558)	21.97 (558)	21.97 (558)	27.56 (700)	31.89 (810)	31.89 (810)
	Unit Depth	in (mm)	12.2 (310)	12.2 (310)	12.2 (310)	12.2 (310)	12.60 (320)	15.55 (395)	15.55 (395)
	Net Weight	lbs (kg)	82.45 (37.4)	82.45 (37.4)	82.45 (37.4)	82.45 (37.4)	102.51 (46.5)	137.57 (62.4)	157.63 (71.5)
	Airflow	CFM	1,200	1,200	1,200	1,200	1,390	2,130	2,130
	Sound Pressure	dB(A)	55.5	56.0	55.5	56.0	59.0	60.0	63.0

* Condensing unit above or below indoor unit

DIMENSIONS

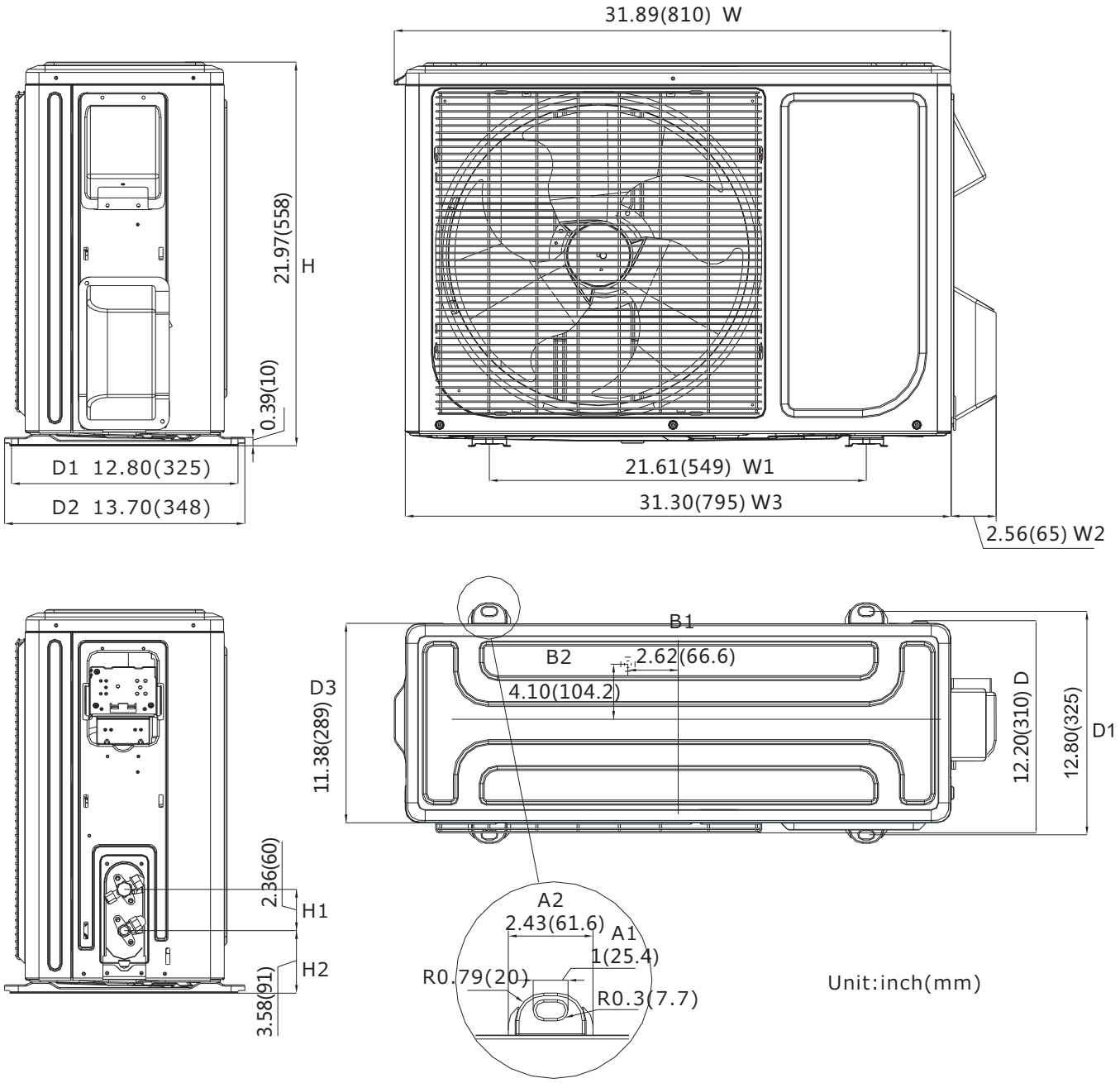

Fig. 1 – Outdoor Unit 9K and 12K

Table 3—Outdoor Units

System Size		9K	12K	9K	12K
V-Ph-Hz		115-1-60		208/230-1-60	
Height (H)	in (mm)	21.97 (558)	21.97 (558)	21.97 (558)	21.97 (558)
Width (W)	in (mm)	31.89 (810)	31.89 (810)	31.89 (810)	31.89 (810)
Depth (D)	in (mm)	12.2 (310)	12.2 (310)	12.2 (310)	12.2 (310)
Weight-Net	lbs (kg)	82.45 (37.4)	82.45 (37.4)	82.45 (37.4)	82.45 (37.4)

DIMENSIONS (CONT)

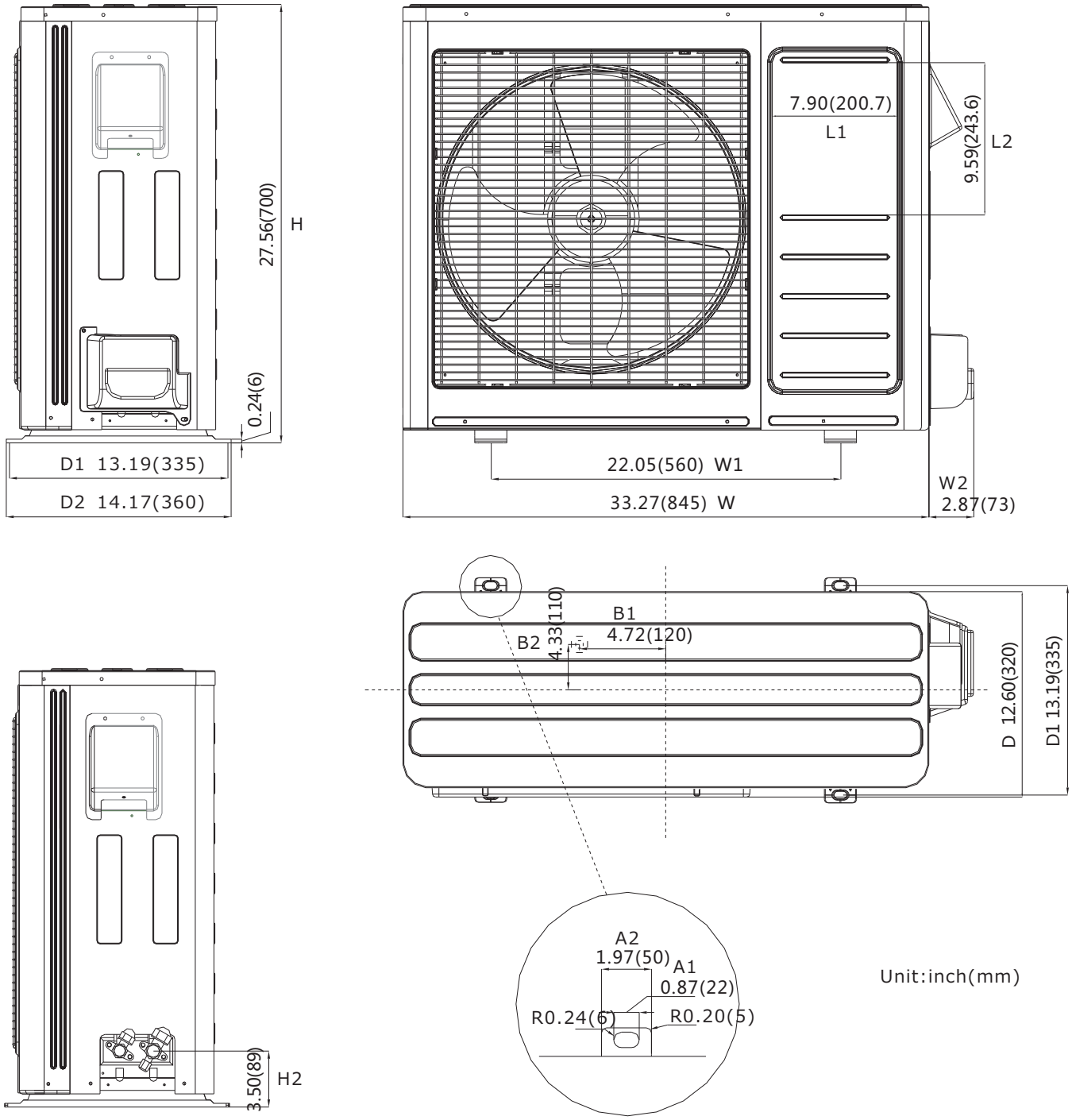

Fig. 2 – Outdoor Unit 18K

Table 4—Outdoor Units

System Size		18K
V–Ph–Hz		208/230–1–60
Height (H)	in (mm)	27.56 (700)
Width (W)	in (mm)	33.27 (845)
Depth (D)	in (mm)	12.60 (320)
Weight–Net	lbs (kg)	102.51 (46.5)

DIMENSIONS − OUTDOOR (CONTINUED)

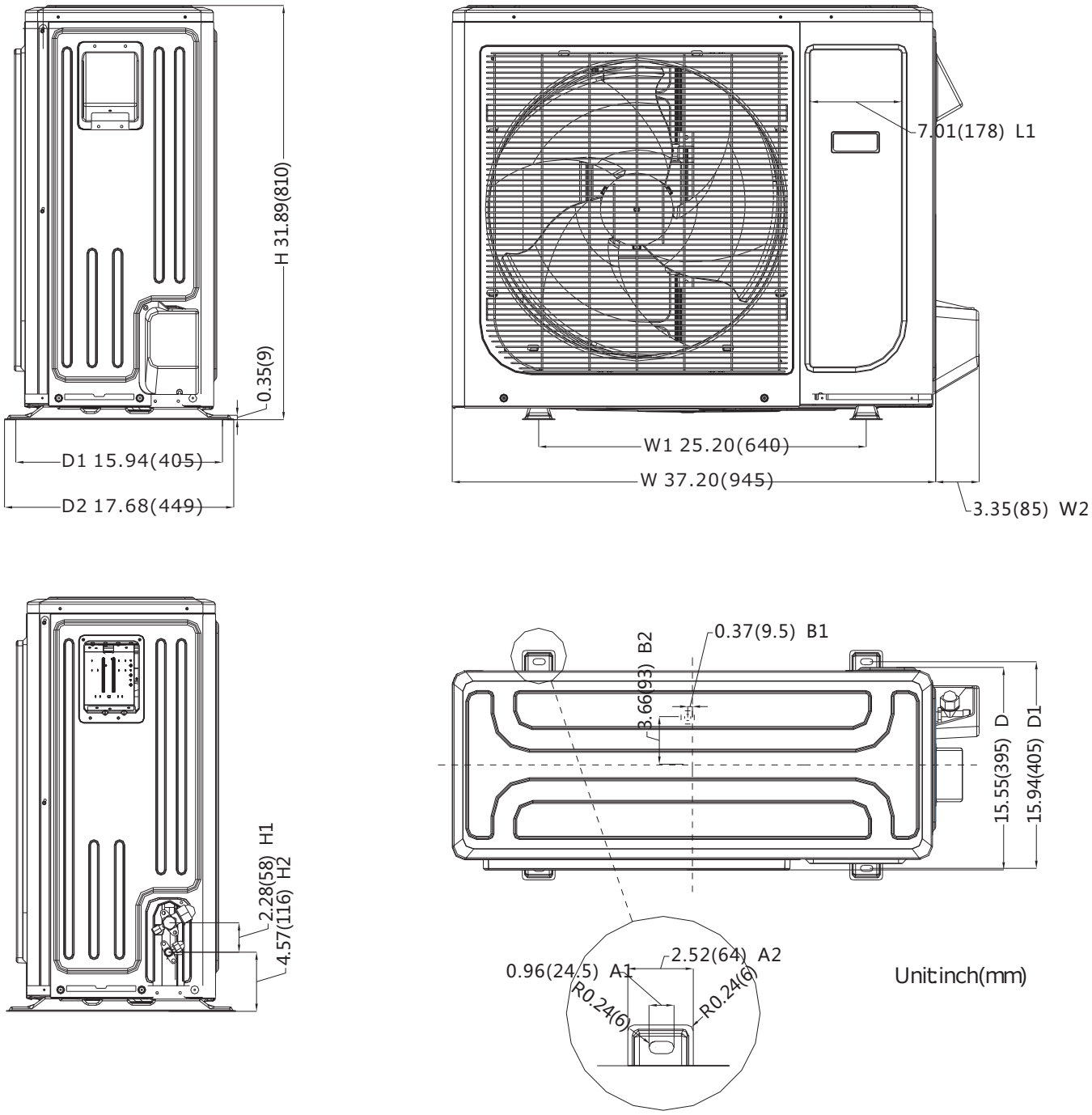

Fig. 3 – Outdoor Unit 24K & 30K

Table 5—Outdoor Units

System Size		24K	30K
V−Ph−Hz		208/230−1−60	
Height (H)	in (mm)	31.89 (810)	31.89 (810)
Width (W)	in (mm)	37.20 (945)	37.20 (945)
Depth (D)	in (mm)	15.55 (395)	15.55 (395)
Weight−Net	lbs (kg)	137.57 (62.4)	157.63 (71.5)

CLEARANCES

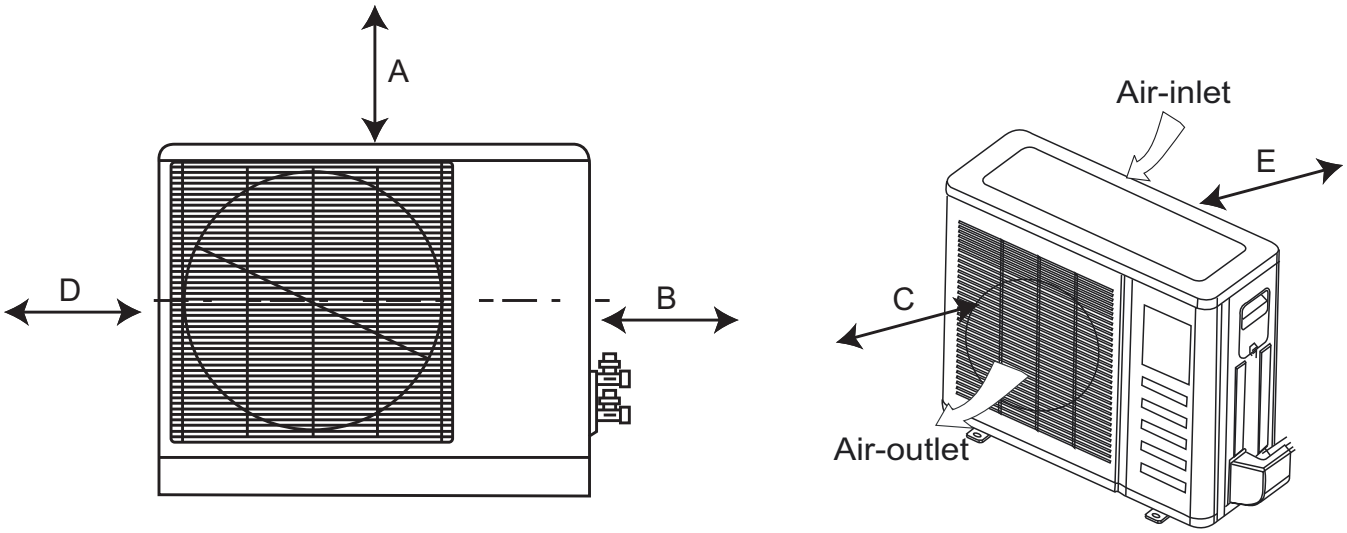

Fig. 4 – Clearances Outdoor

Table 6—Clearances

UNIT	MINIMUM VALUE in. (mm)
A	24 (609)
B	24 (609)
C	24 (609)
D	4 (101)
E	4 (101)

NOTE: **The outdoor unit must be mounted at least 2in (50mm) above the maximum anticipated snow depth.**

ELECTRICAL DATA

Table 7—Electrical Data

OUTDOOR UNIT SIZE		9K	12K	9K	12K	18K	24K	30K
Power Supply	Volts−PH−Hz	115−1−60	115−1−60	208/230−1−60	208/230−1−60	208/230−1−60	208/230−1−60	208/230−1−60
	Max – Min* Oper. Voltage	126−104	126−104	253−187	253−187	253−187	253−187	253−187
	MCA	15	15	15	15	13	15	20
	Max Fuse/ CB AMP	20	20	15	15	20	25	30
Compressor	Volts−PH−Hz	115−1−60	115−1−60	208/230−1−60	208/230−1−60	208/230−1−60	208/230−1−60	208/230−1−60
	RLA	5.3	5.7	5.3	5.7	7.3	8.8	13.5
Outdoor Fan Motor	Volts−PH−Hz	115−1−60	115−1−60	208/230−1−60	208/230−1−60	208/230−1−60	208/230−1−60	208/230−1−60
	FLA	0.14	0.14	0.42	0.42	0.95	0.47	1.21
	Rated HP	0.053	0.053	0.053	0.053	0.067	0.16	0.16
	Output	40	40	40	40	50	120	120

*Permissible limits of the voltage range at which the unit will operate satisfactorily.

LEGEND
FLA — Full Load Amps
MCA — Minimum Circuit Amps
RLA — Rated Load Amps

WIRING

All wires must be sized per NEC (National Electrical Code) or CEC (Canadian Electrical Code) and local codes. Use the Electrical Data table MCA (minimum circuit amps) and MOCP (maximum over current protection) to correctly size the wires and the disconnect fuse or breakers respectively.

Per the caution note, only stranded copper conductors with a 600 volt rating and double insulated copper wire must be used. The use of BX cable is not recommended.

Recommended Connection Method for Power and Communication Wiring −

Power and Communication Wiring:

The main power is supplied to the outdoor unit. The field supplied 14/3 power/communication wiring from the outdoor unit to the indoor unit consists of four (4) wires and provides the power for the indoor unit. Two wires are high voltage AC power, one is communication wiring and the other is a ground wire.

Recommended Connection Method for Power and Communication Wiring (To minimize communication wiring interference)

Power Wiring:

The main power is supplied to the outdoor unit. The field supplied power wiring from the outdoor unit to the indoor unit consists of three (3) wires and provides the power for the indoor unit. Two wires are high voltage AC power and one is a ground wire. To minimize voltage drop, the factory recommended wire size is 14/2 stranded with a ground.

Communication Wiring:

A separate shielded stranded copper conductor only, with a 600 volt rating and double insulated copper wire, must be used as the communication wire from the outdoor unit to the indoor unit. Please use a separate shielded 16GA stranded control wire.

⚠ CAUTION

EQUIPMENT DAMAGE HAZARD

Failure to follow this caution may result in equipment damage or improper operation.

- Wires should be sized based on NEC and local codes.
- Use copper conductors only with a minimum 600 volt rating and double insulated copper wire.

⚠ CAUTION

EQUIPMENT DAMAGE HAZARD

Failure to follow this caution may result in equipment damage or improper operation.

- Be sure to comply with local codes while running wire from the indoor unit to the outdoor unit.
- Every wire must be connected firmly. Loose wiring may cause the terminal to overheat or result in unit malfunction. A fire hazard may also exist. Therefore, ensure all wiring is tightly connected.
- No wire should be allowed to touch the refrigerant tubing, compressor or any moving parts.
- Disconnecting means must be provided and shall be located within sight and readily accessible from the air conditioner.
- Connecting cable with conduit shall be routed through a hole in the conduit panel.

CONNECTION DIAGRAMS

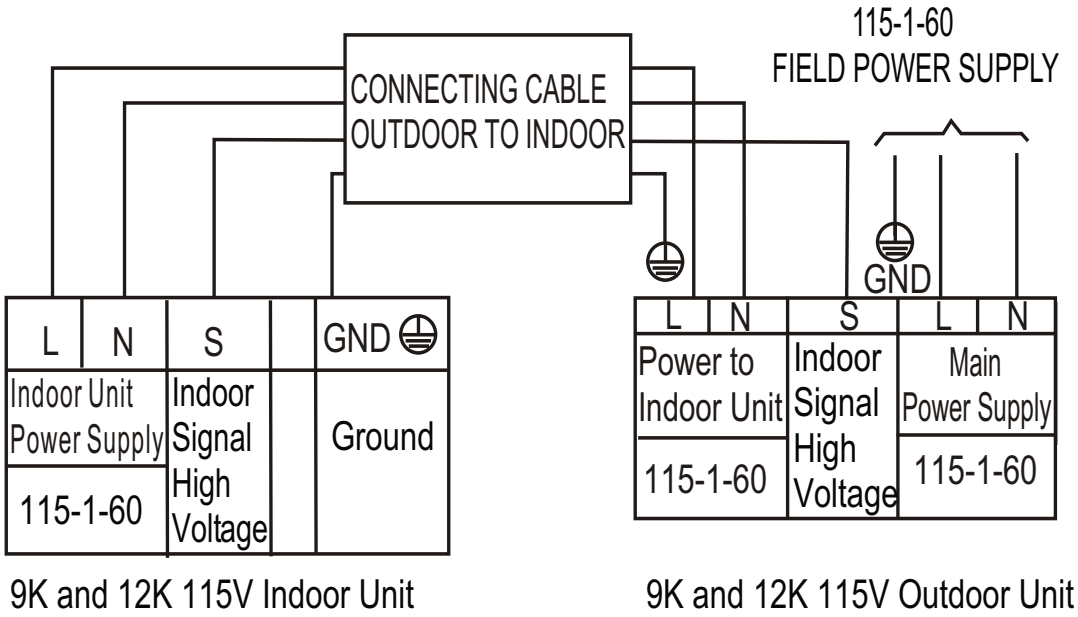

Fig. 5 – 9K (115V), 12K (115V)

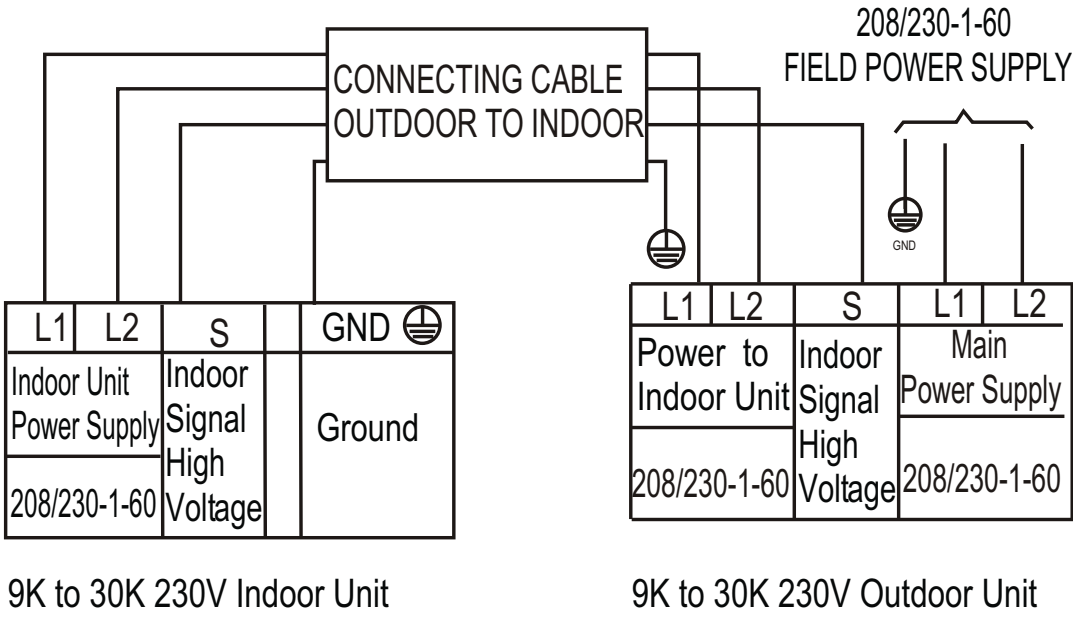

Fig. 6 – 9K (208/230V), 12K (208/230V), 18K, 24K, 30K

Notes:
1. Do not use thermostat wire for any connection between indoor and outdoor units.
2. All connections between indoor and outdoor units must be as shown. **The connections are sensitive to polarity and will result in a fault code.**

WIRING DIAGRAMS

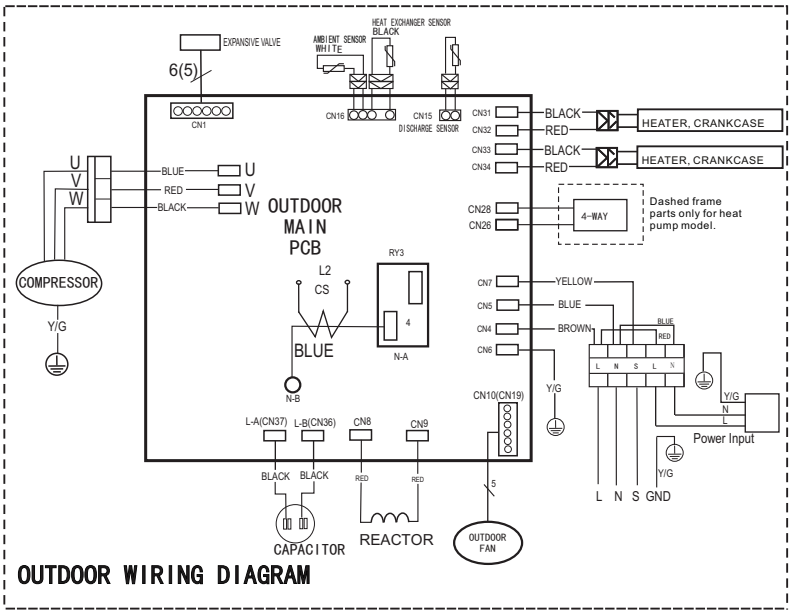

Fig. 7 – Wiring Diagram for 9K & 12K 115V

Table 8—Outdoor Unit Control Board

CODE	PART NAME
CN1	Output: Pin 5&6 (12V) Pin 1−Pin 4: Pulse waveform, (0−12V)
CN15	Input: Pin 1−Pin 2 (0−1.8V)
CN16	Input: Pin1,Pin3 ,Pin4,Pin5 (0−1.8V)
CN19	Output: Pin 1−Pin 5 (0−115V High voltage)
CN31,CN33	Output: 115VAC High voltage
CN32,CN34	Output: 115 VAC High voltage
CN26,CN28	Output: 115 VAC for 4−way control
CN4	Input: 115 VAC High voltage
CN5	Input: 115 VAC High voltage
CN6	Connection to the earth
CN7	Output: Connection of the high voltage
CN8,CN9	Output: High voltage
CN36,CN37	Output: High voltage
N−B	Output: High voltage
U V W	Output: Pulse (0−320VDC)

WIRING DIAGRAMS (CONTINUED)

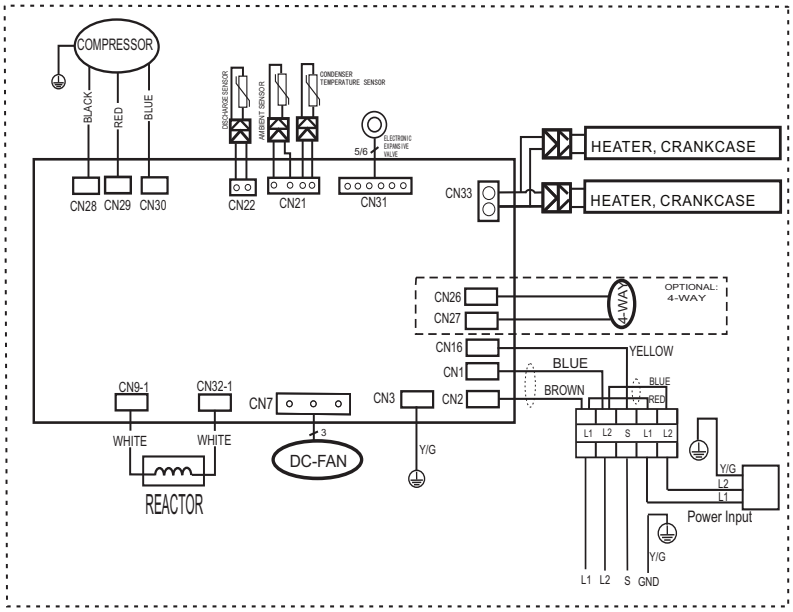

Fig. 8 – Wiring Diagram for 9K & 12K 208/230V

Table 9—Outdoor Unit Control Board

CODE	INPUT or OUTPUT VALUE
CN31	Output: Pin 5&6 (12V) Pin 1–Pin 4:Pulse waveform, (0–12V)
CN21	Input: Pin3–4 (3.3V) Pin 2 (0V),Pin 1,Pin 5 (0–3.3V)
CN22	Input: Pin1 (3.3V) Pin 2 (0–3.3V)
CN37	Output: 230 VAC High voltage
CN9–1,CN32–1	Output: Connection of the high voltage
CN1	Input: 230 VAC High voltage
CN2	Input: 230 VAC High voltage
CN3	Connection to the earth
CN16	Output: Connection of the high voltage
CN26,CN27	Output: High voltage for 4–way control
CN7	Output: Pulse (0–320 VDC) for DC FAN
U V W	Output: Pulse (0–320 VDC) for COMPRESSOR

WIRING DIAGRAMS (CONTINUED)

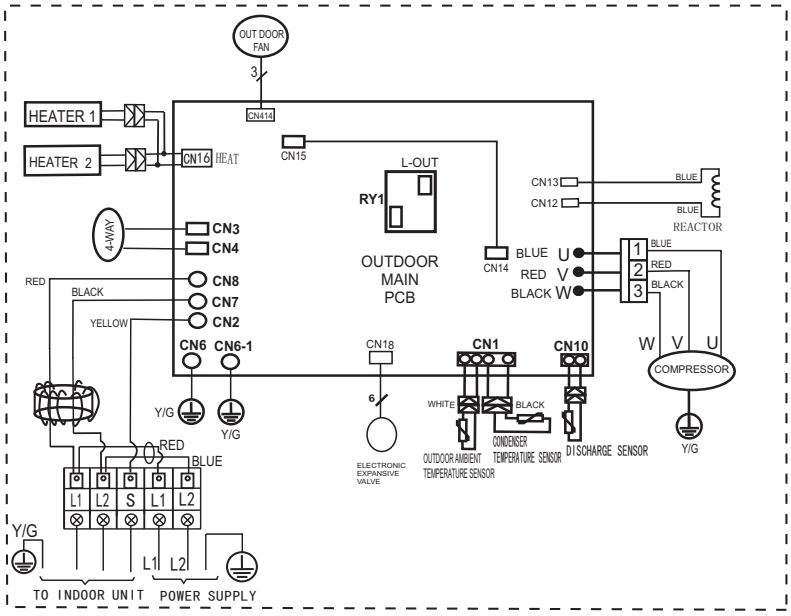

Fig. 9 – Wiring Diagram for 18K 208/230V

Table 10—Outdoor Unit Control Board

CODE	INPUT or OUTPUT VALUE
CN7、CN8	Input: 230V High voltage
CN2	Output: Connection of the high voltage
CN3、CN4	Output: High voltage for 4−way control
CN11、CN16	Output: 230V High voltage for HEATER
CN5	Output: Pulse (0−320V) for DC FAN
CN12、CN13	Output: Connection of the high voltage
U V W	Output: Pulse (0−320V) for compressor
CN10	Input: Pin 1 (5V) Pin 2 (0−5V)
CN1	Input: Pin 3−4 (5V) Pin 2 (0V),Pin 1,Pin 5 (0−5V)
CN18	Output: Pin 5&6 (12V) Pin 1−Pin 4:Pulse waveform, (0−12V)

WIRING DIAGRAMS (CONTINUED)

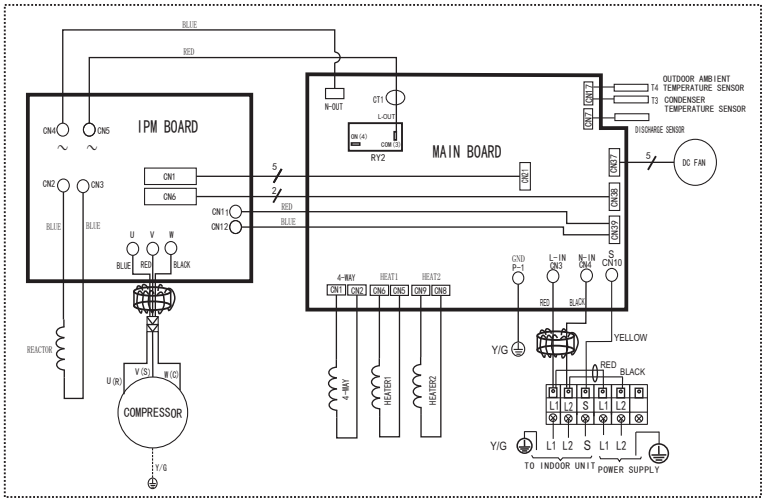

Fig. 10 – Wiring Diagram for 24K 208/230V

Table 11—Outdoor Unit Control Board

CODE	INPUT or OUTPUT VALUE
L_IN	Power Voltage：AC 230V
CN11	Power Voltage：AC 230V
CN16	Relative to the N terminal voltage：DC24V
CN15	Maximum voltage：DC 5V
CN6	Maximum output voltage：AC230V
CN4	Indoor fan interface, Maximum voltage：DC310V
CN5	Stepper motor interface, Maximum voltage between the lines：DC12V
P_1	Ground
CN8	Room temperature sensor interface, maximum voltage：DC 5V
CN9	Pipe temperature sensor interface, maximum voltage：DC 5V
CN10A	Display interface, maximum voltage between the lines DC5V
CN14	Stepper motor interface (optional), maximum voltage between the lines：DC12V

WIRING DIAGRAMS (CONTINUED)

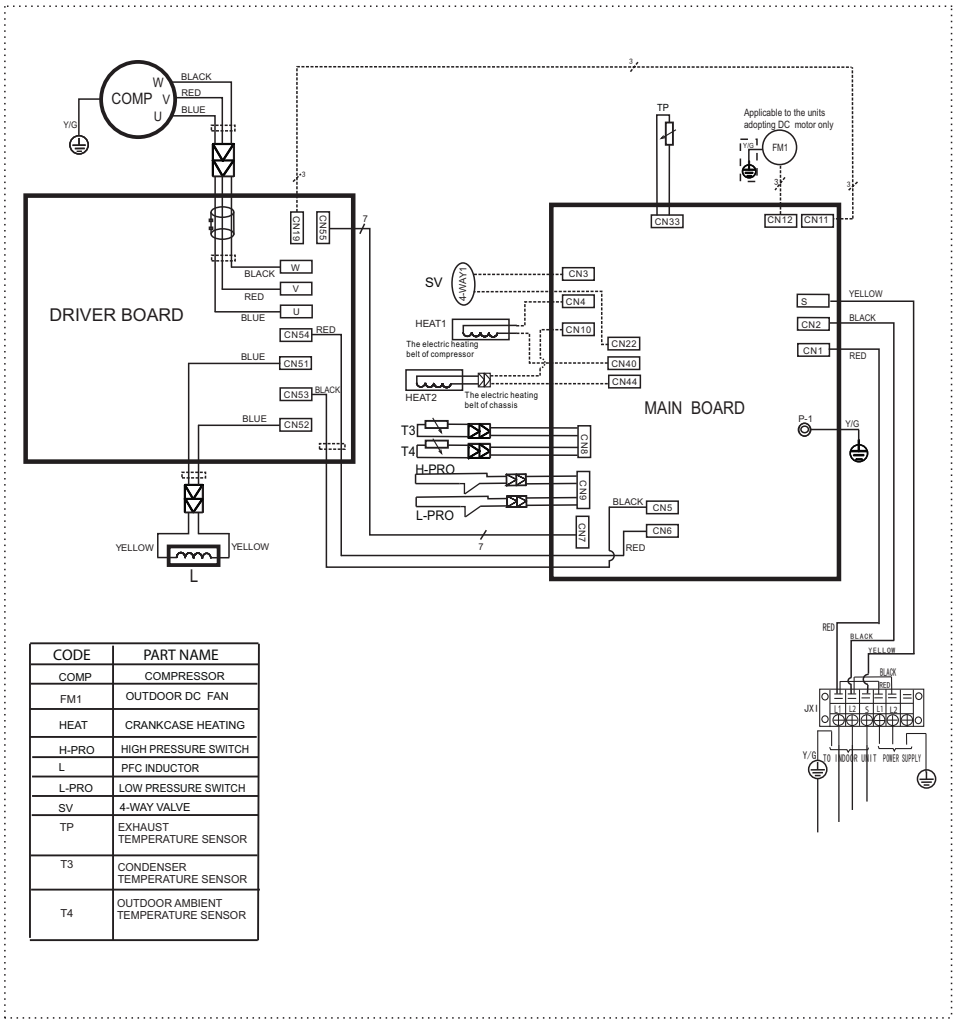

CODE	PART NAME
COMP	COMPRESSOR
FM1	OUTDOOR DC FAN
HEAT	CRANKCASE HEATING
H-PRO	HIGH PRESSURE SWITCH
L	PFC INDUCTOR
L-PRO	LOW PRESSURE SWITCH
SV	4-WAY VALVE
TP	EXHAUST TEMPERATURE SENSOR
T3	CONDENSER TEMPERATURE SENSOR
T4	OUTDOOR AMBIENT TEMPERATURE SENSOR

Fig. 11 – Wiring Diagram for 30K 208/230V

Table 12—Outdoor Unit Control Board

CODE	INPUT or OUTPUT VALUE
CN1、CN2	Input: 230V High voltage
S	Output: Connection of the high voltage
CN11、CN12	Output: Pulse (0–320V) for DC FAN
CN33	Input: Pin 1 (5V) Pin 2 (0–5V)
CN3、CN22	Output: High voltage for 4–way control
CN4、CN40	Output: 230V High voltage for HEATER 1
CN10、CN44	Output: 230V High voltage for HEATER 2
CN8	Input:Pin 3–4 (5V) Pin 2 (0V),Pin 1,Pin 5 (0–5V)
CN9	Input:Pin 1~3 (0V) Pin 2~4 (0–5V)
CN51 CN52	Output: Connection of the high voltage
U V W	Output: Pulse (0–380V) for compressor

FAN AND MOTOR SPECIFICATIONS

Table 13—Fan and Motor Specifications

System Size			9K	12K	9K	12K	18K	24K	30K
V−Ph−Hz			115−1−60		208/230−1−60				
Outdoor Fan Propeller	Material	−−	AS	AS	AS	AS	AS	AS	AS
	Type	−−	ZL−421*117*8−3K	ZL−421*117*8−3K	ZL−421*117*8−3K	ZL−421*117*8−3K	ZL−460*180*10−3N	ZL−560*139*12−3KN	ZL−560*139*12−3KN
	Diameter	in	16.6	16.6	16.6	16.6	18.1	22.0	22.0
	Height	in	4.6	4.6	4.6	4.6	7.1	5.5	5.5
Outdoor Fan Motor	Model	−−	WZDK40−38G−1	WZDK40−38G−1	WZDK40−38G−W−1	WZDK40−38G−W−1	ZKFN−50−8−2	WZDK120−38G−1	WZDK120−38G−W
	Phase	−−	3	3	3	3	3	3	3
	FLA	A	0.14	0.14	0.42	0.42	0.95	0.47	1.21
	Type	−−	DC	DC	DC	DC	DC	DC	DC
	Insulation Class	−−	E	E	E	E	E	E	E
	Safe Class	−−	IPX0	IPX0	IPX0	IPX0	IPX0	IPX0	IPX0
	Input Power	W	42	42	46	46	116	145	150
	Output Power	W	40	40	40	40	50	120	120
	Range of Current	A	0.14±10%	0.14±10%	0.42±10%	0.42±10%	0.95±10%	0.47±10%	1.21±10%
	Rated Current	A	0.14	0.14	0.42	0.42	0.95	0.47	1.21
	Rated HP	HP	0.053	0.053	0.053	0.053	0.067	0.16	0.16
	Speed	rev/min	800/700/600	800/700/600	800/700/600	800/700/600	800/700/600	850/750/700	850/800/750
	Rated RPM	rev/min	900	900	900	900	900	1050	1050
	Max. Input Power	W	42	42	46	46	116	145	150

REFRIGERANT COIL SPECIFICATIONS

Table 14—Outdoor Coil

SYSTEM SIZE		9K	12K	9K	12K	18K	24K	30K
V–Ph–Hz		115–1–60		208/230–1–60				
#of Rows	––	2	2	2	2	2	3	3
Tube Pitch(a) x Row Pitch(b)	in	0.83x0.75	0.83x0.75	0.83x0.75	0.83x0.75	0.83x0.53	0.83x0.53	1.0x0.87
	mm	21x19.05	21x19.05	21x19.05	21x19.05	21x13.37	21x13.37	25.4x22
Fin Spacing	FPI	21	21	21	21	18	18	17
	mm	1.2	1.2	1.2	1.2	1.4	1.4	1.5
Fin Type	––	Plate	Plate	Plate	Plate	Louvered	Louvered	Plate
Fin Material	––	Aluminum	Aluminum	Aluminum	Aluminum	Aluminum	Aluminum	Aluminum
Tube Outside Diameter	in	0.275	0.275	0.275	0.275	0.275	0.275	0.375
	mm	7	7	7	7	7	7	9.52
Nominal Tube Wall	mm	0.24	0.24	0.24	0.24	0.24	0.24	0.27
Tube Enhancement (Yes/No)	––	Yes, inner groove	Yes, inner groove	Yes, inner groove	Yes, inner groove	Yes, inner groove	Yes, inner groove	Yes, inner groove
Tube Material	––	Copper	Copper	Copper	Copper	Copper	Copper	Copper
Coil length x height x width	inch	66.73x19.84x1.50	66.73x19.84x1.50	66.73x19.84x1.50	66.73x19.84x1.50	89.96x25.63x1.57	102.28x29.76x1.57	99.69x24.80x2.60
	mm	1695x504x38	1695x504x38	1695x504x38	1695x504x38	2285x651x40	2598x756x40	2532x630x66
Face Area	ft^2	9.2	9.2	9.2	9.2	16.0	21.1	17.2
# of Circuits	––	4	4	4	4	6	8	6
Capillary Outer Diameter x Inner Diameter x Length	in (mm)	EXV	EXV	EXV	EXV	EXV	φ3.2*1.9*500+ φ3.2*1.9*650	φ3.6*2.4*800+ φ3.6*2.1*300
High Burst Pressure	Psi (MPa)	609.2(4.2)	609.2(4.2)	609.2(4.2)	609.2(4.2)	609.2(4.2)	609.2(4.2)	609.2(4.2)

REFRIGERATION CYCLE DIAGRAMS

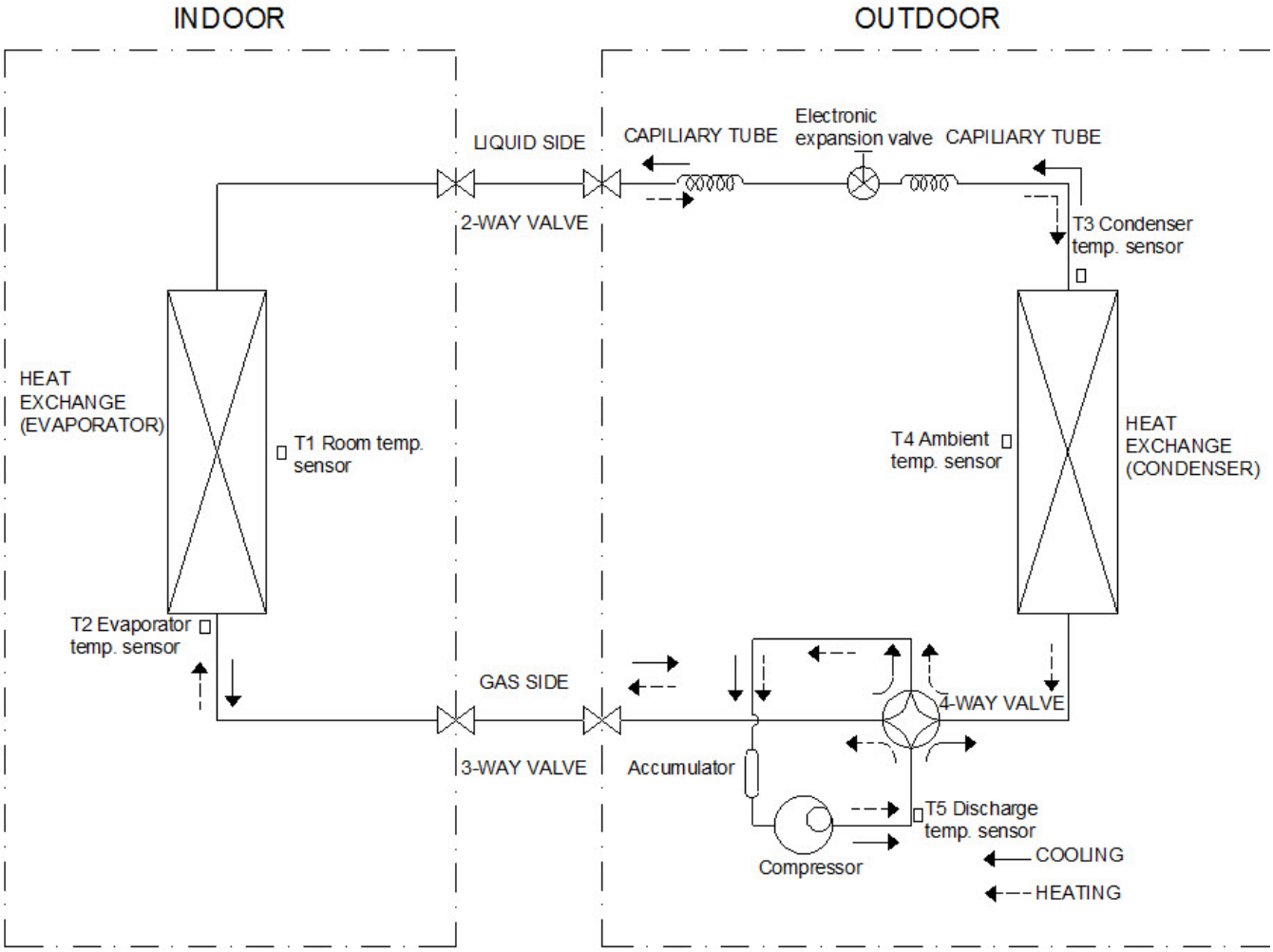

Fig. 12 – Refrigerant Cycle Diagram Heat Pumps

REFRIGERANT LINES

General Refrigerant Line Sizing:

1 The outdoor units are shipped with a full charge of R410A refrigerant. All charges, line sizing, and capacities are based on runs of 25 ft. (7.6 m). For runs over 25 ft. (7.6 m) consult long−line section for proper charge adjustments.

2 Minimum refrigerant line length between the indoor and outdoor units is 10 ft. (3 m).

3 Refrigerant lines should not be buried in the ground. If it is necessary to bury the lines, not more than 36−in (914 mm) should be buried. Provide a minimum 6−in (152 mm) vertical rise to the service valves to prevent refrigerant migration.

4 Both lines must be insulated. Use a minimum of 1/2−in. (12.7 mm) thick insulation. Closed−cell insulation is recommended in all long−line applications.

5 Special consideration should be given to isolating interconnecting tubing from the building structure. Isolate the tubing so that vibration or noise is not transmitted into the structure.

IMPORTANT: Both refrigerant lines must be insulated separately.

Table 15 lists the maximum lengths allowed.

Table 15—Piping and Refrigerant Information

SYSTEM SIZE			9K	12K	9K	12K	18K	24K	30K
V−Ph−Hz			115−1−60		208/230−1−60				
Piping	Min. Piping Length	ft(m)	10(3)	10(3)	10(3)	10(3)	10(3)	10(3)	10(3)
	Standard Piping Length	ft(m)	25(7.5)	25(7.5)	25(7.5)	25(7.5)	25(7.5)	25(7.5)	25(7.5)
	Max. outdoor−indoor height difference	ft(m)	32(10)	32(10)	32(10)	32(10)	65(20)	65(20)	82(25)
	Max. Piping Length with no additional refrigerant charge	ft(m)	26(8)	26(8)	26(8)	26(8)	26(8)	26(8)	26(8)
	Max. Piping Length	ft(m)	82(25)	82(25)	82(25)	82(25)	98(30)	98(30)	164(50)
	Additional refrigerant charge (between Standard – Max piping length)	Oz/ft(g/m)	0.16(15)	0.16(15)	0.16(15)	0.16(15)	0.16(15)	0.32(30)	0.32(30)
	Gas Pipe (size − connection type)	in(mm)	3/8(9.52)	1/2(12.7)	3/8(9.52)	1/2(12.7)	1/2(12.7)	5/8(16)	5/8(16)
	Liquid Pipe (size − connection type)	in(mm)	1/4(6.35)	1/4(6.35)	1/4(6.35)	1/4(6.35)	1/4(6.35)	3/8(9.52)	3/8(9.52)
Refrigerant	Refrigerant Type	−−	R410A	R410A	R410A	R410A	R410A	R410A	R410A
	Charge Amount	Lbs(kg)	2.76(1.25)	2.76(1.25)	2.76(1.25)	2.76(1.25)	4.19(1.90)	5.18(2.35)	6.62(3.00)

- The above charge is for piping runs up to 25 ft. (7.6 m).
- For piping runs greater than 25 ft. (7.6 m), add refrigerant up to the allowable length as specified below.
- The outdoor unit has an electronic expansion valve to manage the refrigerant flow of the connected fan coil.

Long Line Applications,:

1 No change in line sizing is required.

2 Add refrigerant per Table 16.

Table 16—Additional Charge Table

Unit Size	Total Line Length Ft (m)		Additional Charge, oz/ft. Ft (m)			
	Min.	Max.	10−25 (3−8)	>25−82 (8−25)	>82−98 (25−30)	>98−164 (30−50)
9	10 (3)	82 (25)	None	0.16		
12						
18		98 (30)			0.16	
24				0.32	0.32	
30		164 (50)				0.32

SYSTEM EVACUATION AND CHARGING

⚠ CAUTION

UNIT DAMAGE HAZARD

Failure to follow this caution may result in equipment damage or improper operation.

Never use the system compressor as a vacuum pump.

Refrigerant tubes and indoor coil should be evacuated using the recommended deep vacuum method of 500 microns. The alternate triple evacuation method may be used if the following procedure is followed. Always break a vacuum with dry nitrogen.

System Vacuum and Charge

Using Vacuum Pump

1 Completely tighten all flare nuts and connect manifold gage charge hose to a charge port of the low side service valve (see Fig. 13).
2 Connect the charge hose to the vacuum pump.
3 Fully open the low side of the manifold gage (see Fig. 14).
4 Start the vacuum pump.
5 Evacuate using the triple evacuation method.
6 After evacuation is complete, fully close the low side of manifold gage and stop the vacuum pump operation.
7 The factory charge contained in the outdoor unit is good for up to 25ft. (8 m) of line length.
8 Disconnect the charge hose from the charge connection of the low side service valve.
9 Securely tighten the service valves caps.

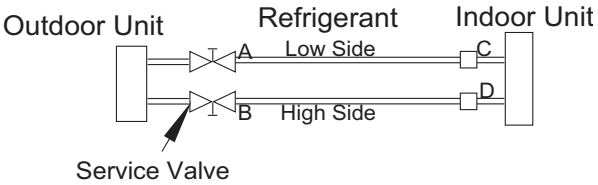

Fig. 13 – Service Valve

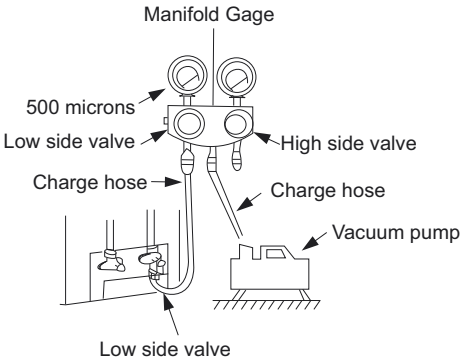

Fig. 14 – Manifold

Deep Vacuum Method

The deep vacuum method requires a vacuum pump capable of pulling a vacuum of 500 microns and a vacuum gage capable of accurately measuring the vacuum depth. The deep vacuum method is the most positive way of assuring a system is free of air and liquid water (see Fig. 15).

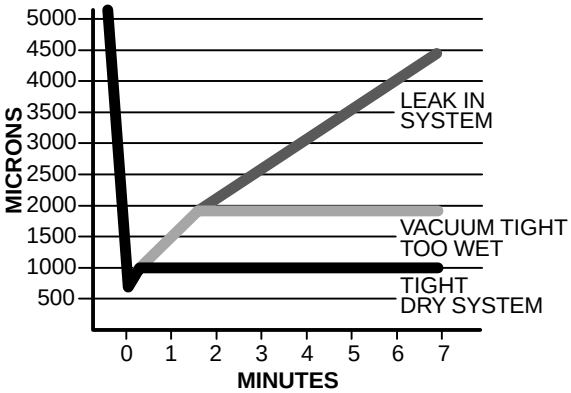

Fig. 15 – Deep Vacuum Graph

Triple Evacuation Method

The triple evacuation method should be used. Refer to Fig. 16 and proceed as follows:

1 Pump system down to 500 MICRONS of mercury and allow the pump to continue operating for an additional 15 minutes. Unit must maintain 500 microns or less for 30 minutes or more to ensure a dry system.
2 Close the service valves and shut off the vacuum pump.
3 Connect a nitrogen cylinder and regulator to system and open until the system pressure is 2 psig.
4 Close the service valve and allow the system to stand for 10 minutes. During this time, dry nitrogen will be able to diffuse throughout the system absorbing moisture.
5 Repeat this procedure as indicated in Fig. 16. The system will then be free of any contaminants and water vapor.

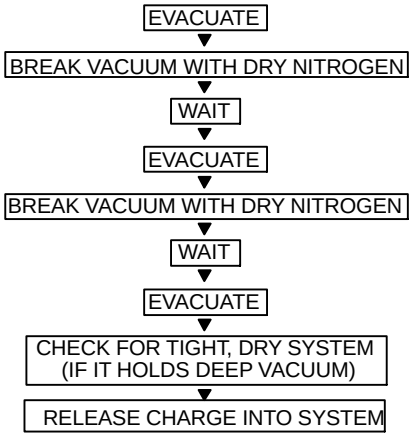

Fig. 16 – Triple Evacuation Method

Final Tubing Check

IMPORTANT: Check to be certain factory tubing on both indoor and outdoor unit has not shifted during shipment. Ensure tubes are not rubbing against each other or any sheet metal. Pay close attention to feeder tubes, making sure wire ties on feeder tubes are secure and tight.

ELECTRONIC FUNCTION

Main Protection

Three Minute Delay for Compressor Restart

Less than a one minute delay for the first time start−up and a three minute delay for subsequent start−ups.

Compressor Top Temperature Protection

The unit stops working when the compressor top temp. protector cuts off, and restarts after the compressor top temp. protector restarts.

Compressor Discharge Temperature Protection

Compressor discharge temp. T5>239°F(115°C) for 5s, compressor stops.

Fan Speed is out of Control

When the indoor fan speed remains too low (300RPM) for a certain time, the unit stops and the LED displays the failure.

Inverter Module Protection

The inverter module has a protection function for the current, voltage and temperature. If these protections trigger, the corresponding code displays on the indoor unit and the unit stops working.

Indoor Fan Delayed Open Function

When the unit starts up, the louver becomes active immediately and the indoor fan open 10 seconds later. If the unit runs in the **HEATING** mode, the anti−cold wind function will control the indoor fan.

Compressor Preheating Functions

Preheating Permitting Condition:

When T4 (outdoor ambient temperature)<37.4°F(3°C), the preheating function activates.

Sensor Protection at Open Circuit and Breaking Disconnection

When there is only one malfunctioning temperature sensor, the air conditioner keeps working however displays a error code, in case of any emergency use. When there is more than one malfunctioning temperature sensor, the air conditioner stops working.

Operation Modes and Functions

Fan Mode

1 Outdoor fan and compressor stop.
2 Temperature setting function is disabled, and no setting temperature is displayed.
3 Indoor fan can be set to high/med/low/auto.
4 The louver operates same as in cooling mode.
5 Auto Fan

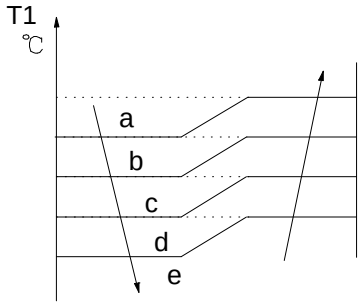

Fig. 17 – Auto Fan

Cooling Mode

Compressor Running Rules

When T1−Ts<28.4°F(−2°C), the compressor stops, when T1—TS>31.1°F(−0.5°C), the compressor activates. When the AC runs in the **MUTE** mode, the compressor runs with low a frequency. When the current is more than setting value, the current protection function activates, and the compressor stops.

Outdoor Fan Running Rules

The outdoor unit runs at a different fan speed according to T4. For different outdoor units, the fan speeds differ.

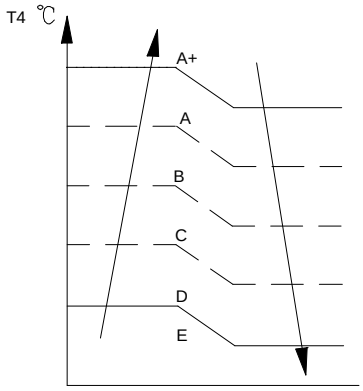

Fig. 18 – Outdoor Fan Running Rules

Condenser Temperature Protection

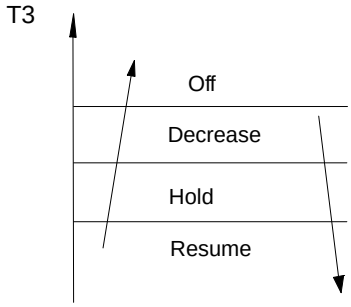

Fig. 19 – Condenser Temperature Protection

When the condenser temperature temp. is more than setting value, the compressor stops.

Evaporator Temperature Protection

When the evaporator temperature temp. is less than the setting value, the compressor stops.

Heating Mode

Compressor Running Rules

When T1−Ts>−ΔT, the compressor stops, when T1−TS<ΔT−1.5, the compressor turns on. ΔT is the programmed parameter of temperature compensation.

When the AC runs in the **MUTE** mode, the compressor runs in a low frequency. When the current is more than setting value, the current protection function triggers and the compressor stops.

Outdoor Fan Running Rules

The outdoor unit runs at a different fan speed according to T4. For different outdoor units, the fan speeds are differ.

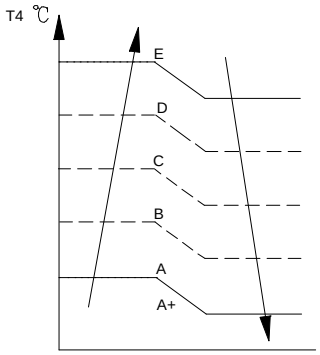

Fig. 20 – Outdoor Fan Running Rules

Defrosting Mode

The air conditioner enters the **DEFROSTING** mode according to the T3 temp. value and the T3 value range temp. change and the compressor running time. During the **DEFROSTING** mode, the compressor continues to run, and the indoor and outdoor motors stop. The indoor unit defrost lamp displays "dF."

Evaporator Coil Temperature Protection

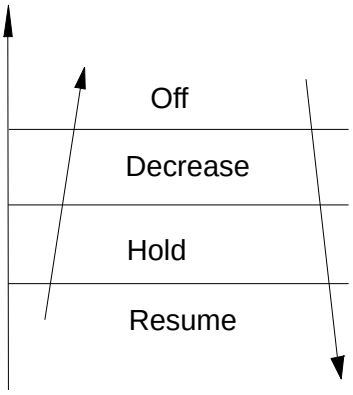

Fig. 21 – Evaporator Coil Temperature Protection

When the evaporator temperature temp. is greater than the setting protection value, the compressor stops.

Refrigerant Leakage Detection

This function is only active in **COOLING** mode. The function can prevent the compressor from being damaged by a refrigerant leak or compressor overload.

Open Condition

When the compressor is active, the coil temperature value of evaporator T2 either changes very little or not at all.

TROUBLESHOOTING

This section provides the required flow charts to troubleshoot problems that may arise.

NOTE: **Information required in the diagnoses can be found either on the wiring diagrams or in the appendix.**

Required Tools:

The following tools are needed when diagnosing the units:

- Digital multimeter
- Screw drivers (Phillips and straight head)
- Needle−nose pliers
- Refrigeration gauges

Recommended Steps:

1 Refer to the diagnostic hierarchy charts below and determine the problem at hand.

2 Go to the chart listed in the diagnostic hierarchy and follow the steps in the chart for the selected problem. For ease of service, the systems are equipped with a diagnostic code display LED on both the indoor and outdoor units. The outdoor diagnostic display is on the outdoor unit board and is limited to a few errors. The indoor diagnostic display is a combination of flashing LEDs on the display panel on the front of the unit. If possible, always check the diagnostic codes displayed on the indoor unit first. The diagnostic codes for the indoor and outdoor units are listed in the appendix. Problems may arise that are not covered by a diagnostic code, however are covered by the diagnostic flow charts. These problems are typical air conditioning mechanical or electrical issues that can be corrected using standard air conditioning repair techniques. For problems requiring measurements at the control boards, note the following:

(1.) Always disconnect the main power.

(2.) When possible check the outdoor board first.

(3.) Start by removing the outdoor unit top cover.

(4.) Reconnect the main power.

(5.) Probe the outdoor board inputs and outputs with a digital multi−meter referring to the wiring diagrams.

(6.) Connect the red probe to the hot signal and the black probe to the ground or negative.

(7.) Note that some of the DC voltage signals are pulsating voltages for signal. this pulse should be rapidly moving at all times when there is a signal present.

(8.) If it is necessary to check the indoor unit board you must start by disconnecting the main power.

(9.) Remove the front cover of the unit and then control box cover.

(10.) Carefully remove the indoor board from the control box, place it face up on a plastic surface (not metal).

(11.) Reconnect the main power and repeat steps 5, 6, and 7.

(12.) Disconnect main power before reinstalling board to avoid shock hazard and board damage.

Electric power remains in the capacitors even the power supply is shut off. Do not forget to discharge the electricity power in the capacitor.

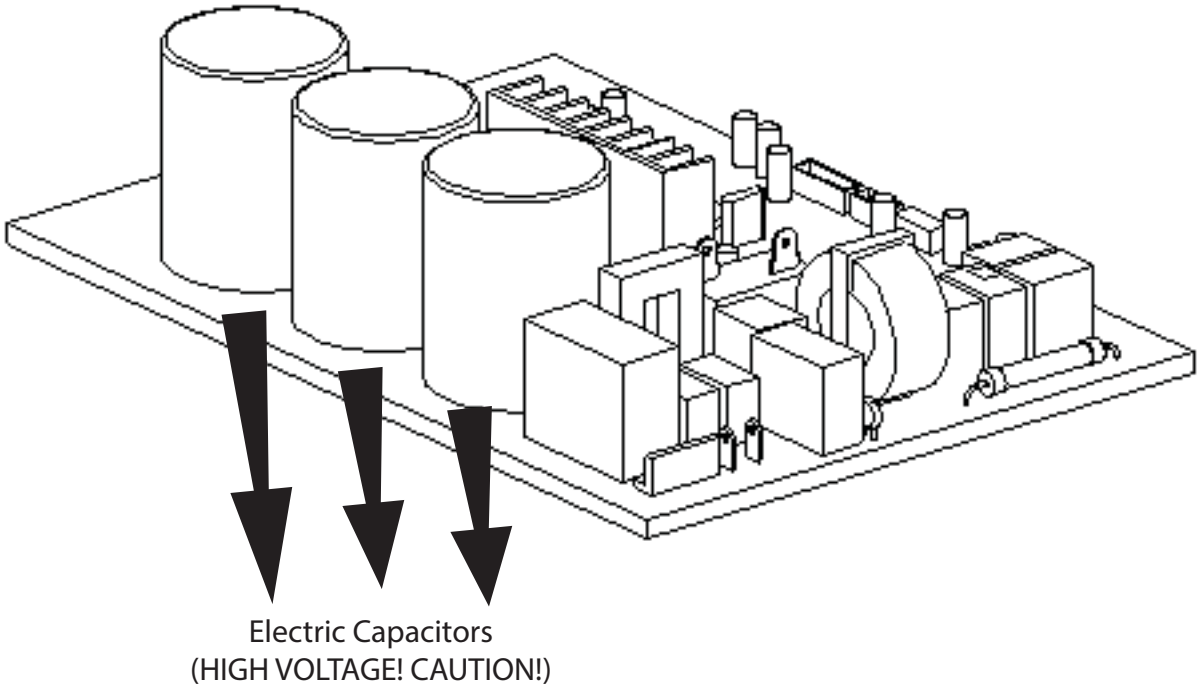

Fig. 22 – Electrolytic Capacitors

For other models, please connect discharge resistance (approx.100Ω 40W) or soldering iron (plug) between +, − terminals of the electrolytic capacitor on the contrary side of the outdoor PCB.

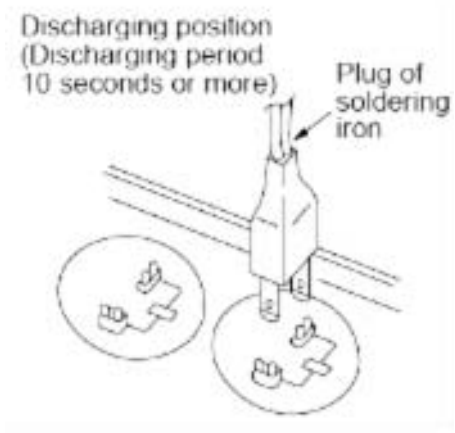

Fig. 23 – Discharging Position

NOTE: Fig 23 is for reference only. The plug associated with your unit may differ.

DIAGNOSTIC GUIDES

Table 17—Diagnostic Guides Indoor Units

OPERATION LAMP	TIMER LAMP	DISPLAY	LED STATUS
★ 1 time	X	E0	Indoor unit EEPROM parameter error
★ 2 times	X	E1	Indoor / outdoor units communication error
★ 4 times	X	E3	Indoor fan speed has been out of control
★ 5 times	X	E4	Indoor room temperature sensor T1 open circuit or short circuit
★ 6 times	X	E5	Evaporator coil temperature sensor T2 open circuit or short circuit
★ 7 times	X	EC	Refrigerant leakage detection
★ 1 time	O	F0	Overload current protection
★ 2 times	O	F1	Outdoor ambient temperature sensor T4 open circuit or short circuit
★ 3 times	O	F2	Condenser coil temperature sensor T3 open circuit or short circuit
★ 4 times	O	F3	Compressor discharge temperature sensor T5 open circuit or short circuit
★ 5 times	O	F4	Outdoor unit EEPROM parameter error
★ 6 times	O	F5	Outdoor fan speed has been out of control
★ 1 time	☐	P0	IPM malfunction or IGBT over−strong current protection
★ 2 times	☐	P1	Over voltage or over low voltage protection
★ 3 times	☐	P2	High temperature protection of compressor top diagnosis and solution
★ 5 times	☐	P4	Inverter compressor drive error

O(light) X(off) ★(flash)

Outdoor Unit Error Display Sizes 09−12 (115V)

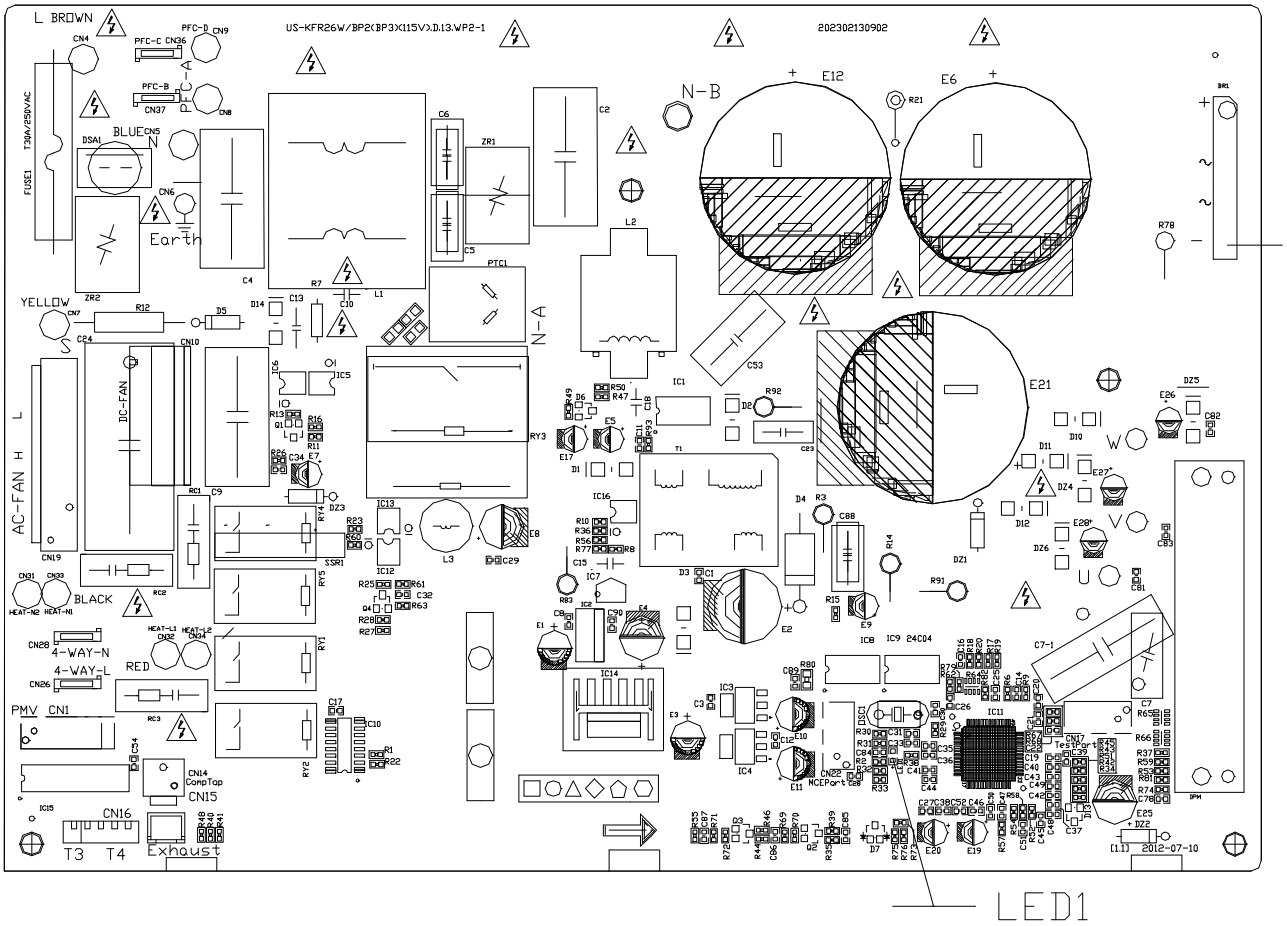

Fig. 24 – Sizes 09−12 (115V)

LEGEND:

- LED1 − The status light, by which you can judge the unit's status, NORMAL or ERROR (standby). Flashes once per second (low speed flashing) (error). Flashes once per half second (high speed flashing) (running) always on.

Outdoor Unit Error Display Sizes 09−12 (208−230V)

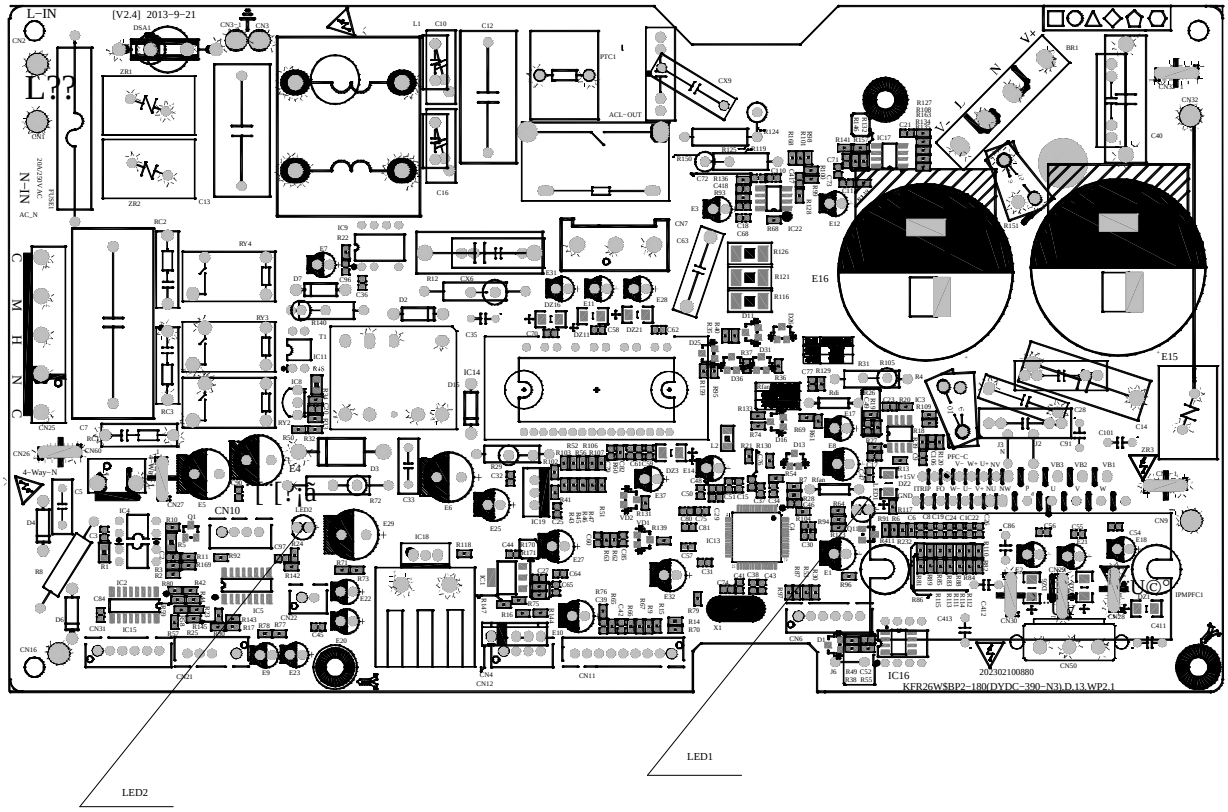

Fig. 25 – Sizes 09−12 (208−230V)

LEGEND:

- LED1 − Flashing once per second (low speed flashing)(standby). Flashing once per half second (high speed flashing)(standby)(error). Always on (running)
- LED2 − Always on (Power Supply Light)

Outdoor Unit Error Display Size 18

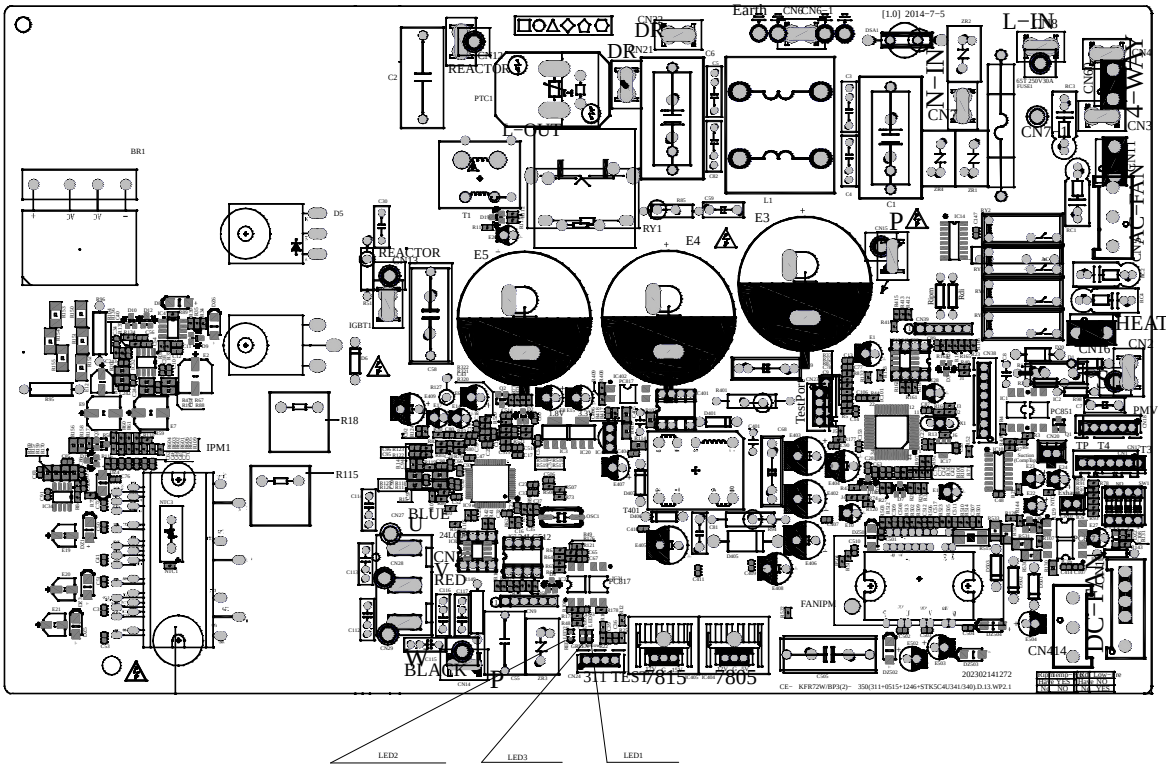

Fig. 26 – Size 18

- LED1 − Flashing once per second (low speed flashing)(standby). Flashing once per half second (high speed flashing)(standby)(error). Always on (running)

After powering on the unit, LED3 (Green color) and LED2 (Red color) flashes if the unit has a problem.

Table 18—Error Codes

No.	Problems	LED2 (Green)	LED2 (Red)	IU Display
1	Standby for normal	O	X	
2	Operation normally	X	O	
3	IPM malfunction or IGBT over−strong current protection	☆	X	P0
4	Over voltage or too low voltage protection	O	O	P1
5	EEPROM parameter error	O	☆	E5
6	Inverter compressor drive error	X	☆	P4
7	Inverter compressor drive error	☆	O	P4
8	Inverter compressor drive error	☆	☆	P4

O（light） X（off） ☆（2.5Hz flash）

Outdoor Unit Error Display Size 24

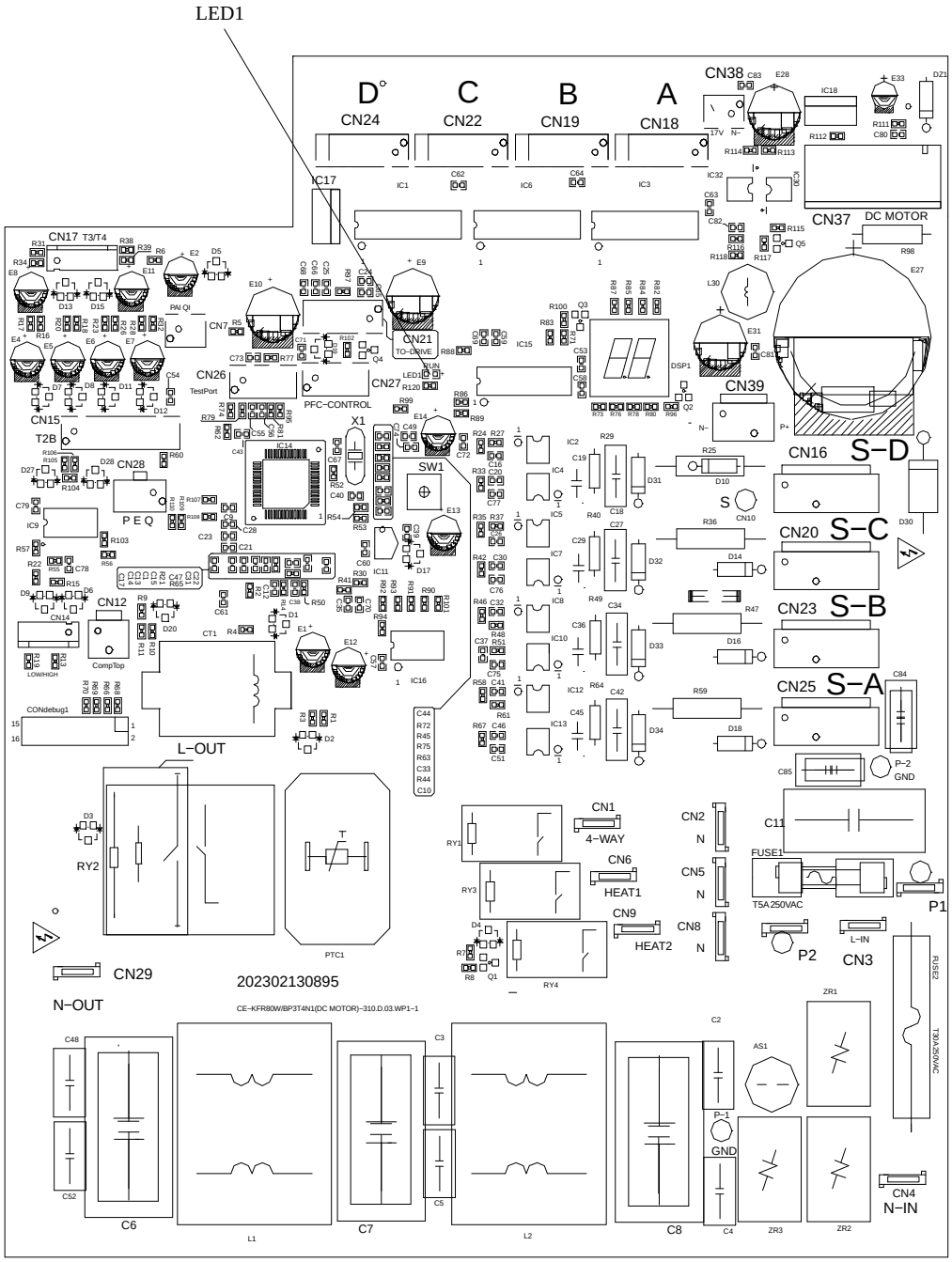

Fig. 27 – Size 24

LEGEND:

- LED1 − (Standby) − Flashing once per second (low speed flashing)(error). Flashing once per half second (high speed flashing)(running) always on

Outdoor Unit Error Display Size 30

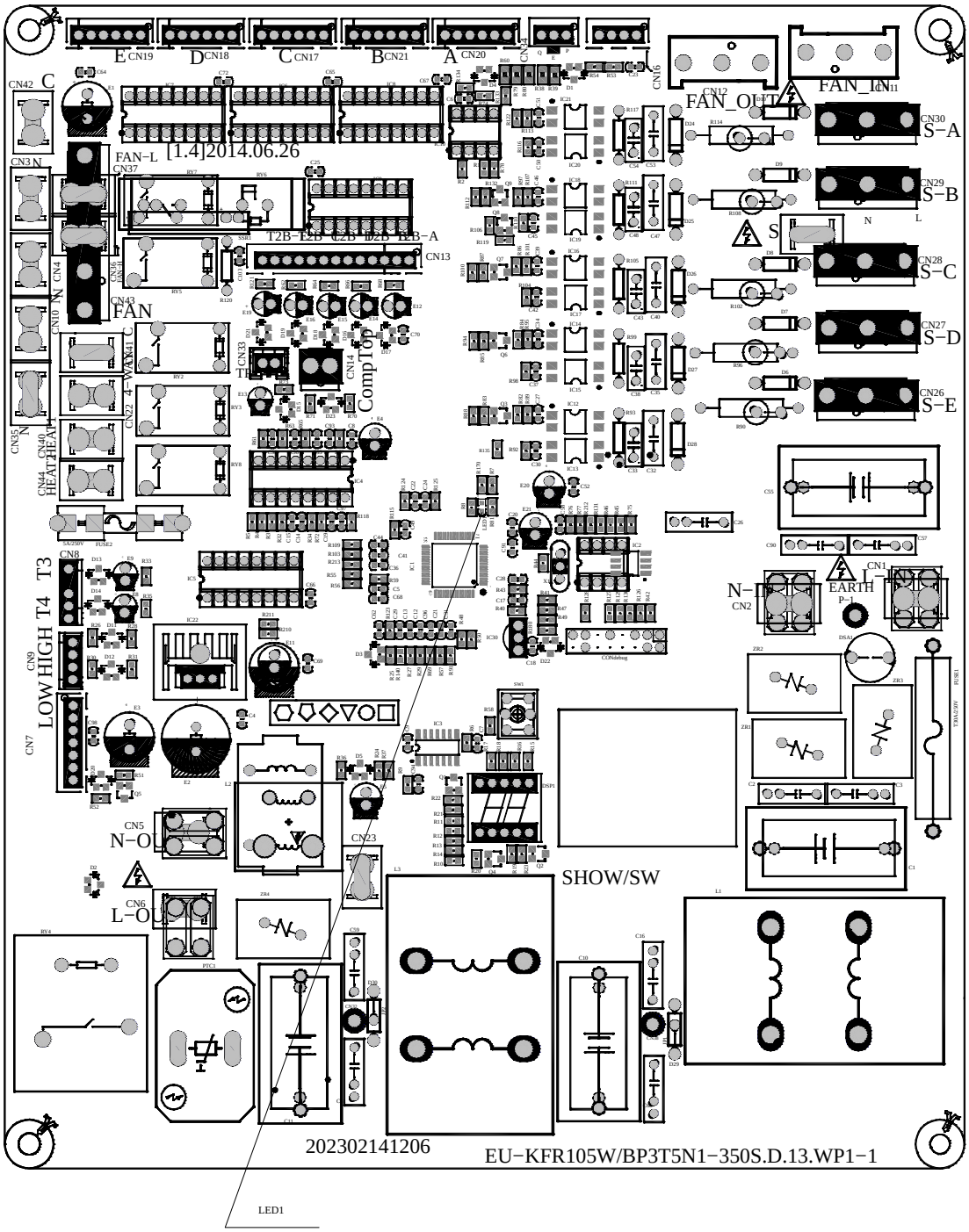

Fig. 28 – Size 30

LEGEND:

- LED1 − Flashing once per second (low speed flashing)(standby). Flashing once per half second (high speed flashing)(standby)(error). Always on (running)

DIAGNOSIS AND SOLUTION

EEPROM Parameter Error Diagnosis and Solution (E0/F4)

Error Code	E0/F4
Malfunction decision conditions	Indoor or outdoor PCB main chip does not receive feedback from the EEPROM chip.
Supposed causes	·Installation mistake ·PCB faulty

Troubleshooting

Power off, then restart the unit 2 minutes later.

↓ Yes

Replace the indoor/outdoor main PCB.

EEPROM: A read−only memory whose contents can be erased and reprogrammed using a pulsed voltage. For the EEPROM chip location, please refer to Fig. 29.

Fig. 29 – Outdoor PCB (18K Model)

NOTE: Fig. 29 is for reference only and the PCB pictured may differ from the actual unit.

DIAGNOSIS AND SOLUTION (CONT)

Indoor / outdoor unit's communication diagnosis and solution (E1)

Error Code	E1
Malfunction Decision Conditions	Indoor unit does not receive feedback from the outdoor unit during 110 seconds and this condition happens four times continuously.
Supposed Causes	·Wiring mistake ·Indoor or outdoor PCB faulty

Troubleshooting

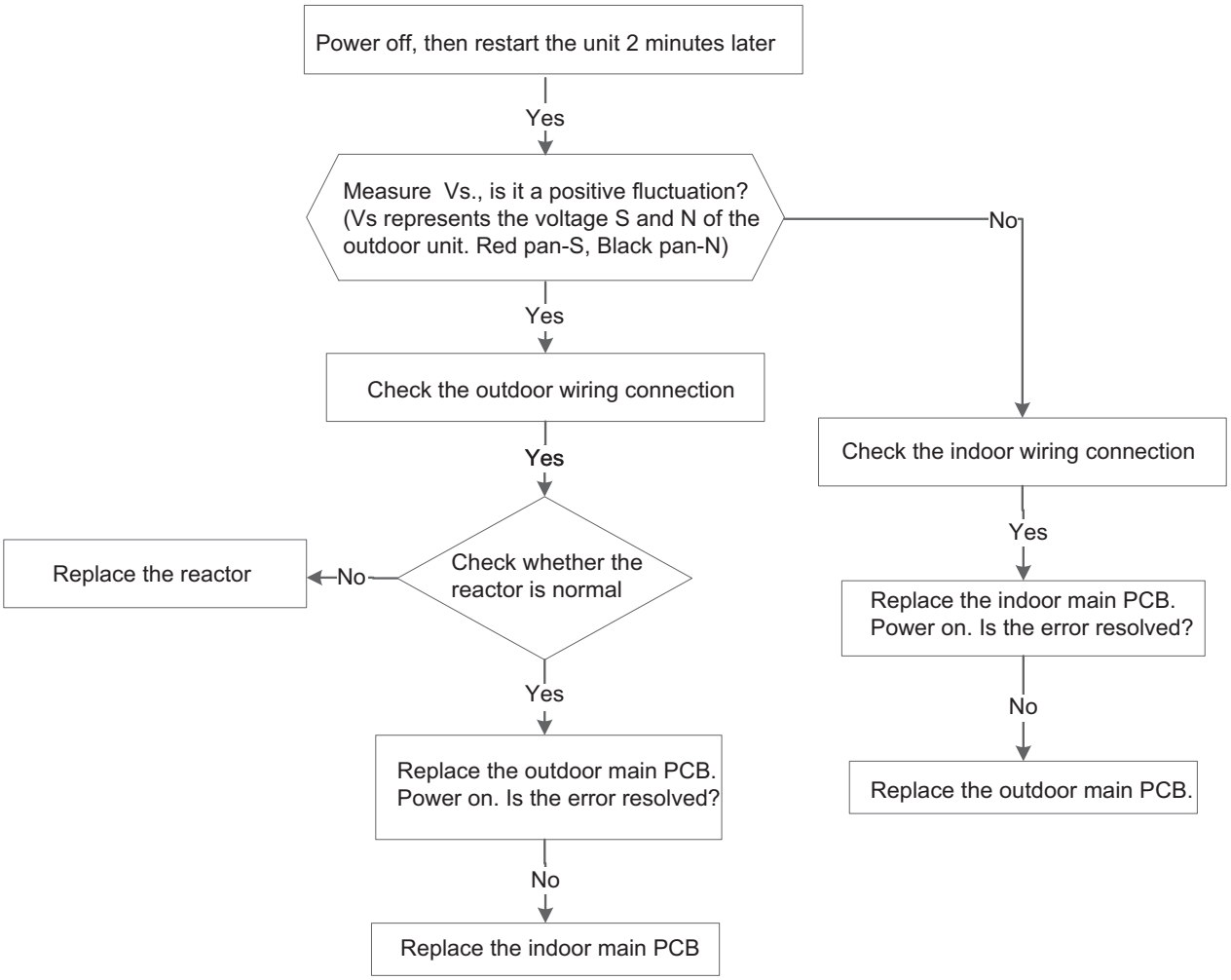

DIAGNOSIS AND SOLUTION (CONT)

Fig. 30 – Test the DC Voltage

Use a multimeter to test the DC voltage between L2 port and S port of the outdoor unit. The red pin of the multimeter connects with the L2 port while the black pin is for the S port. When air conditioner is running normal, the voltage moves alternately between −50V to 50V. If the outdoor unit has a malfunction, the voltage will move alternately with positive value. If the indoor unit has malfunction, the voltage will have a certain value.

Fig. 31 – Test the Reactor Resistance

Use a multimeter to test the resistance of the reactor which does not connect with the capacitor. The normal value should be around zero (0) ohm. Otherwise, the reactor has a malfunction and needs to be replaced.

DIAGNOSIS AND SOLUTION (CONT)

Zero crossing detection error diagnosis and solution (E2)

Error Code	E2
Malfunction decision conditions	When the PCB does not receive a zero crossing signal feedback for 4 minutes or the zero crossing signal time interval is abnormal.
Supposed causes	·Connection mistake ·PCB faulty

Troubleshooting

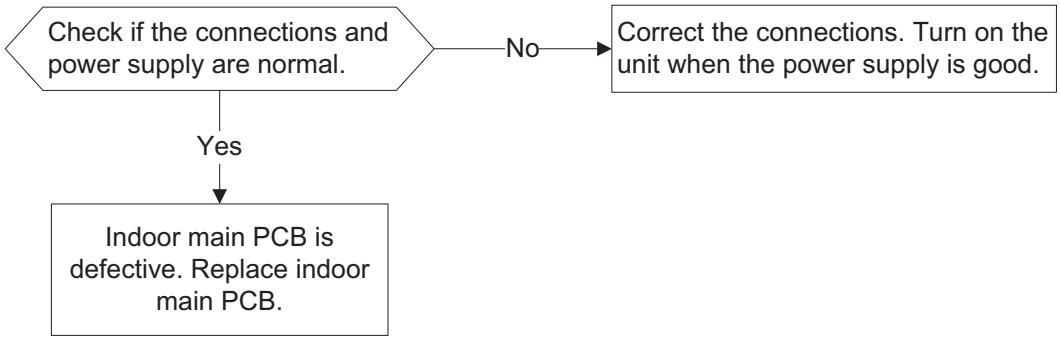

DIAGNOSIS AND SOLUTION (CONT)

Fan speed has been out of control diagnosis and solution (E3/F5)

Error Code	E3/F5
Malfunction decision conditions	When indoor fan speed remains too low (300RPM) for certain time, the unit stops and the LED displays the failure.
Supposed causes	·Wiring mistake ·Fan ass'y faulty ·Fan motor faulty ·PCB faulty

Troubleshooting

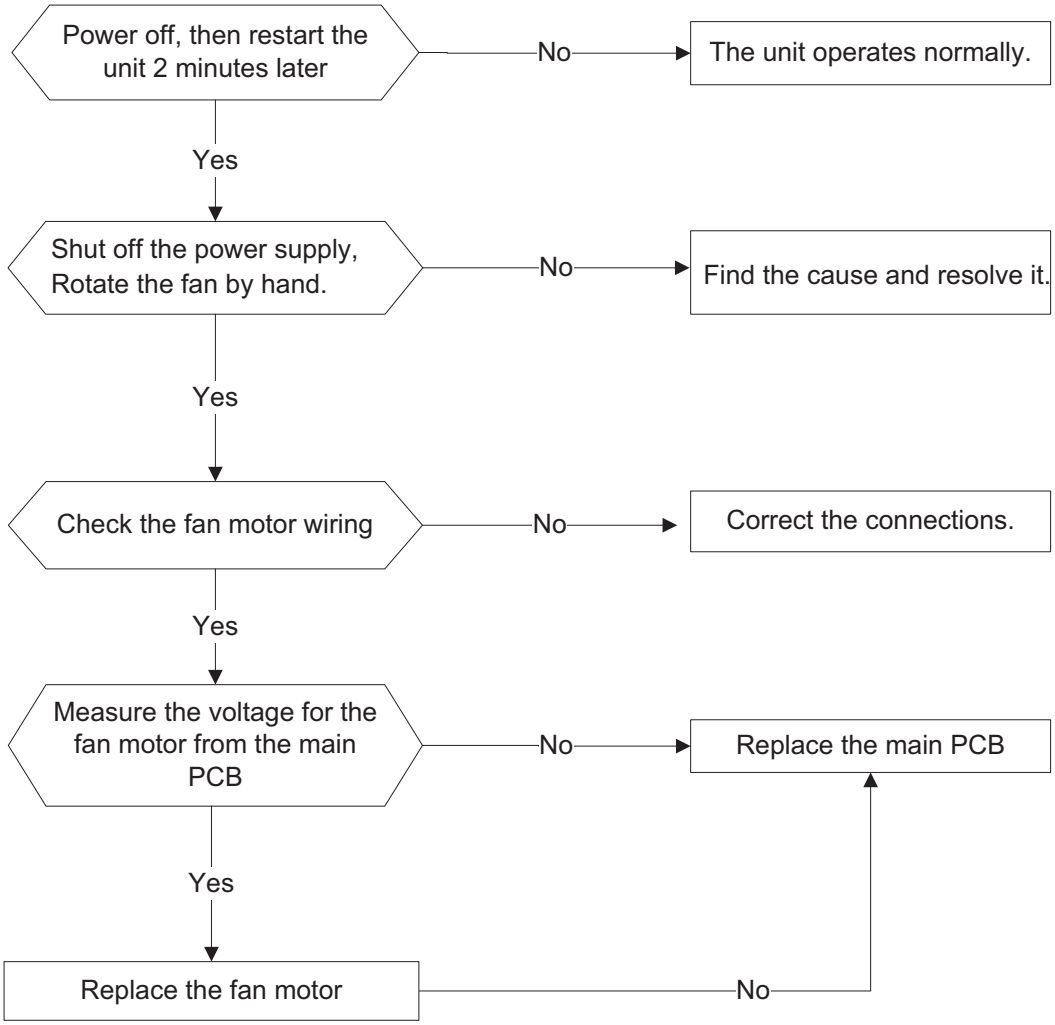

DIAGNOSIS AND SOLUTION (CONT)

Index 1

1 Indoor or Outdoor DC Fan Motor (control chip is in fan motor)

- Power on and when the unit is in standby, measure the voltage of pin1−pin3, pin4−pin3 in fan motor connector. If the voltage value is not in the range shown in Table 19 or Table 20, the PCB has an issue and needs to be replaced.

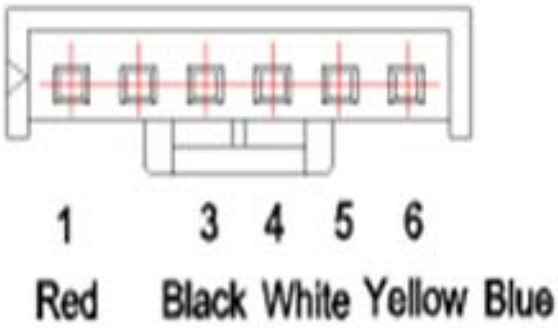

Fig. 32 – Motor Connector

Table 19—DC motor voltage input and output (voltage: 220−240V~)

NO.	COLOR	SIGNAL	VOLTAGE
1	Red	Vs/Vm	280V~380V
2	–––	–––	–––
3	Black	GND	0V
4	White	Vcc	14–17.5V
5	Yellow	Vsp	0~5.6V
6	Blue	FG	14–17.5V

Table 20—DC motor voltage input and output (voltage : 115V~)

NO.	COLOR	SIGNAL	VOLTAGE
1	Red	Vs/Vm	140V~190V
2	–––	–––	–––
3	Black	GND	0V
4	White	Vcc	14–17.5V
5	Yellow	Vsp	0~5.6V
6	Blue	FG	14–17.5V

2 .Outdoor DC Fan Motor (control chip is in the outdoor PCB)

- Power on the unit and check if the fan runs normally. If the fan runs normally, the PCB has an issue and needs to be replaced. If the fan does not run normally, measure the resistance of each two pins. If the resistance is not equal to each other, the fan motor has an issue and needs to be replaced, otherwise the PCB has an issue and needs to be replaced.

DIAGNOSIS AND SOLUTION (CONT)

Open circuit or short circuit of temperature sensor diagnosis and solution (E4/E5/F1/F2/F3)

Error Code	E4/E5/F1/F2/F3
Malfunction decision conditions	If the sampling voltage is lower than 0.06V or higher than 4.94V, the LED displays the failure.
Supposed causes	·Wiring mistake ·Sensor faulty ·PCB faulty

Troubleshooting

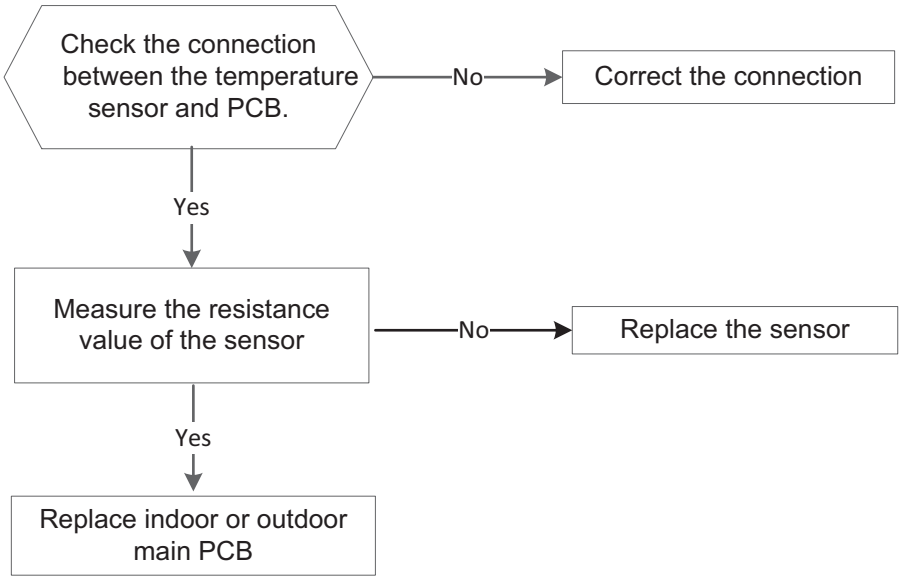

Fig. 33 – Check the connection

DIAGNOSIS AND SOLUTION (CONT)

Refrigerant Leakage Detection diagnosis and solution (EC)

Error Code	EC
Malfunction decision conditions	Define the evaporator coil temp.T2 of the compressor. It starts running in Tcool. At first, 5 minutes after the compressor starts up, if T2 ＜Tcool－35.6°F (Tcool－2 °C) does not run for 4 seconds and this situation occurs 3 times, the display area displays “EC” and the air conditioner turns off.
Supposed causes	·T2 sensor faulty ·Indoor PCB faulty ·System problems, such as leakage or blocking.

Troubleshooting

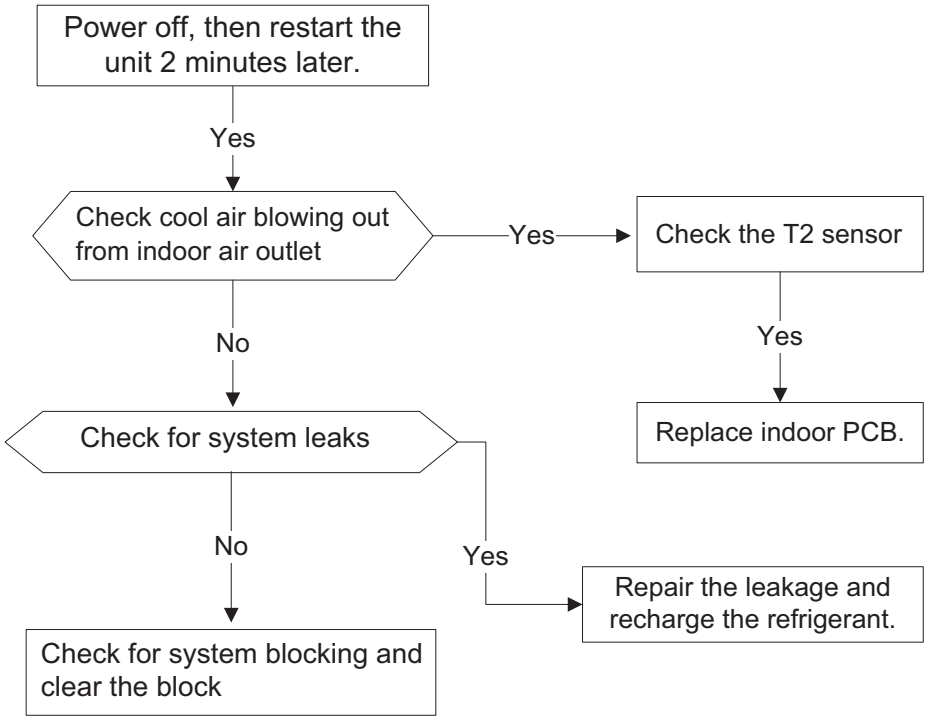

DIAGNOSIS AND SOLUTION (CONT)

Overload current protection diagnosis and solution (F0)

Error Code	F0
Malfunction decision conditions	An abnormal current rise is detected by checking the specified current detection circuit.
Supposed causes	·Power supply problems ·System blockage ·PCB faulty ·Wiring mistake ·Compressor malfunction

Troubleshooting

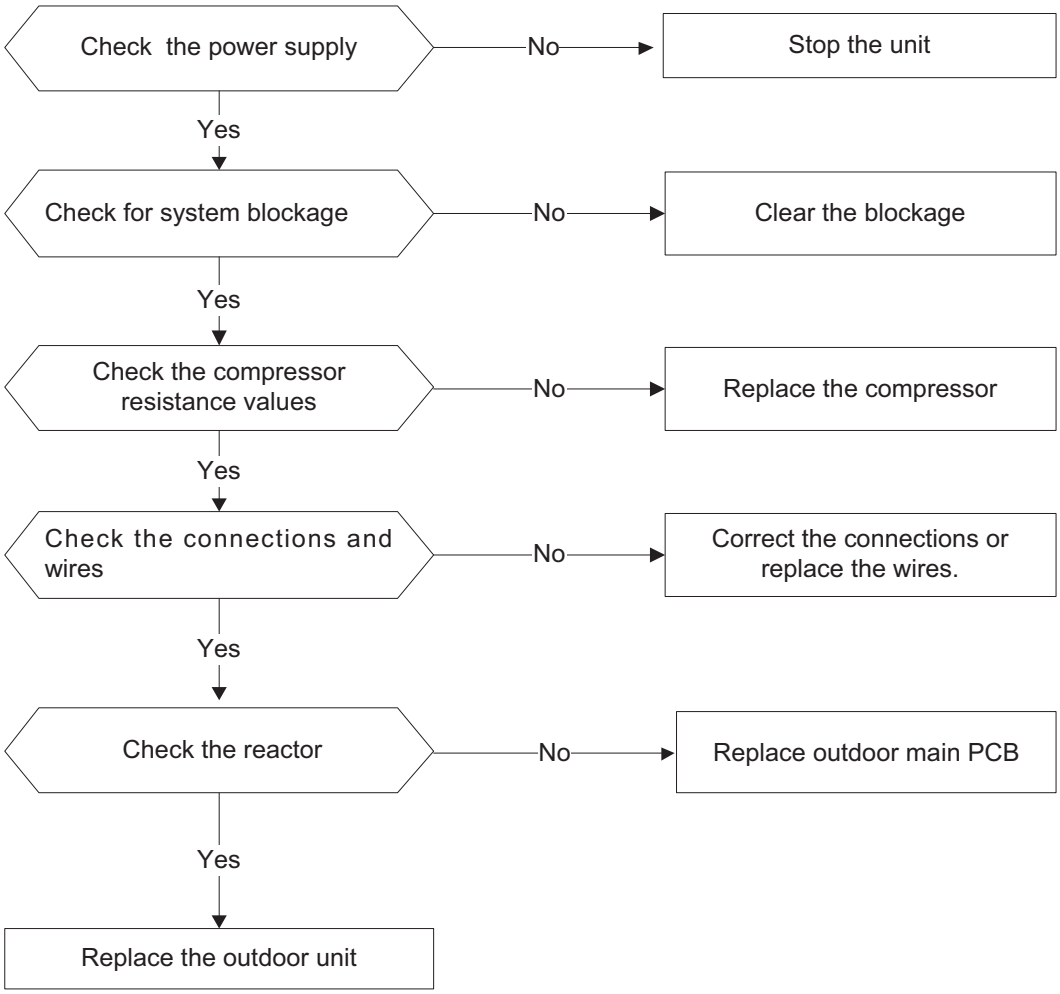

DIAGNOSIS AND SOLUTION (CONT)

IPM malfunction or IGBT over−strong current protection diagnosis and solution (P0)

Error Code	P0
Malfunction decision conditions	When the voltage signals that the IPM sends to the compressor drive chip is abnormal, the LED displays “P0” and the air conditioner turns off.
Supposed causes	·Wiring mistake ·IPM malfunction ·Outdoor fan ass’y faulty ·Compressor malfunction ·Outdoor PCB faulty

Troubleshooting

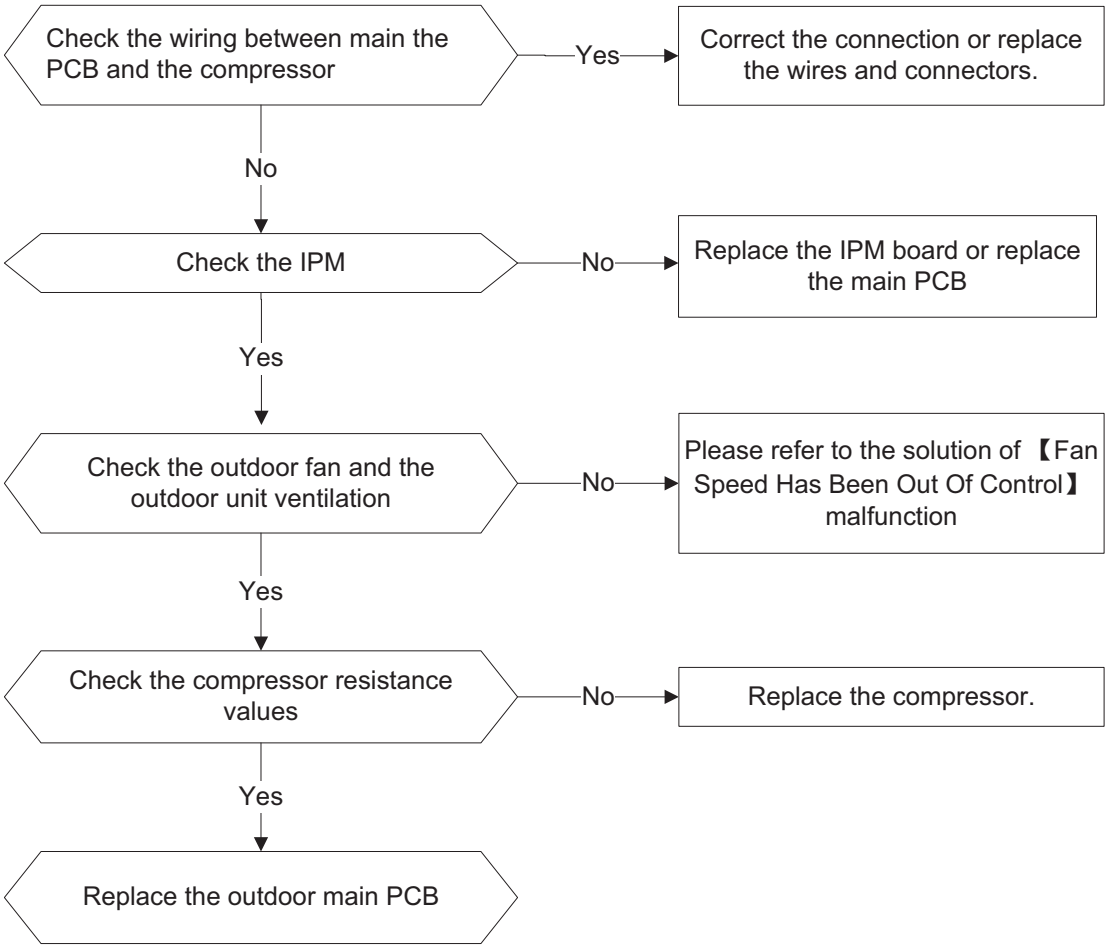

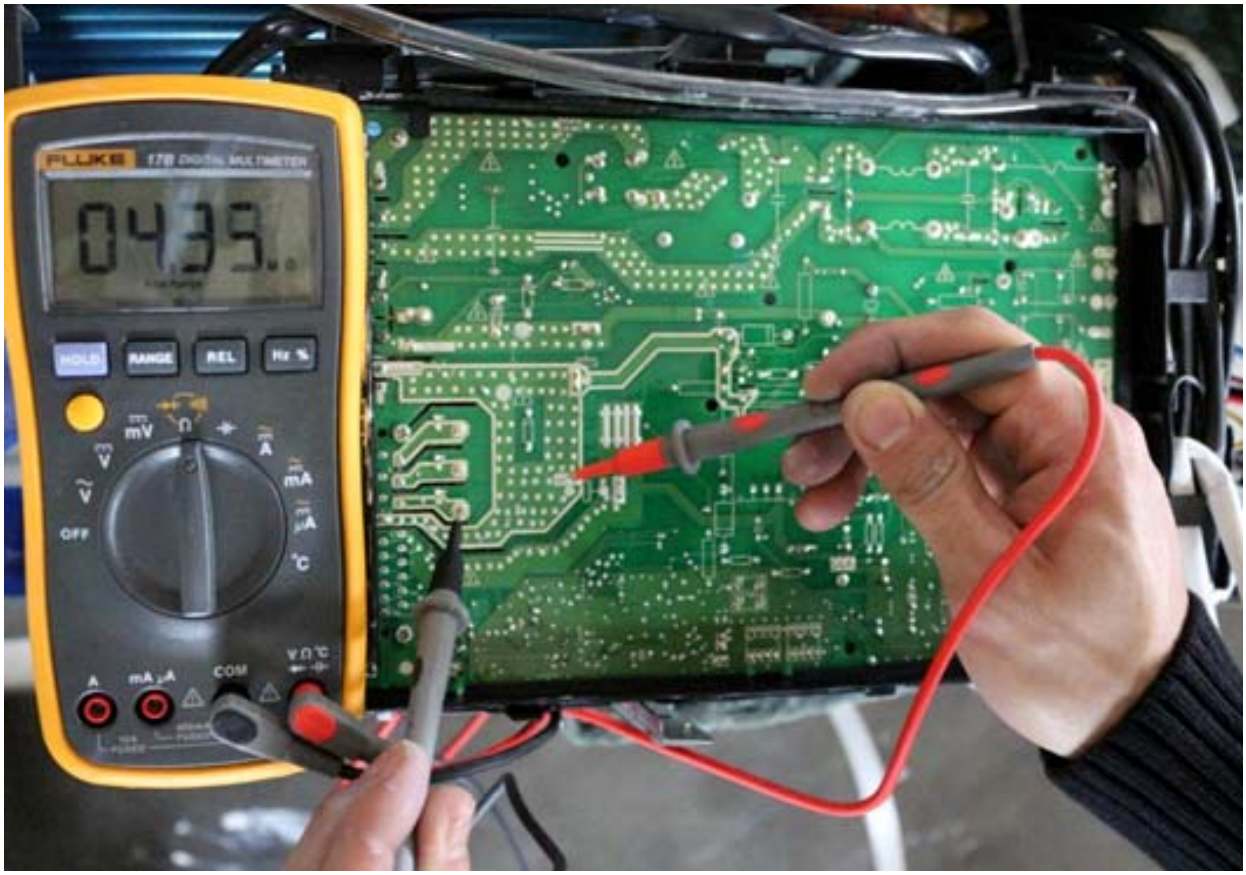

Fig. 34 – P−U

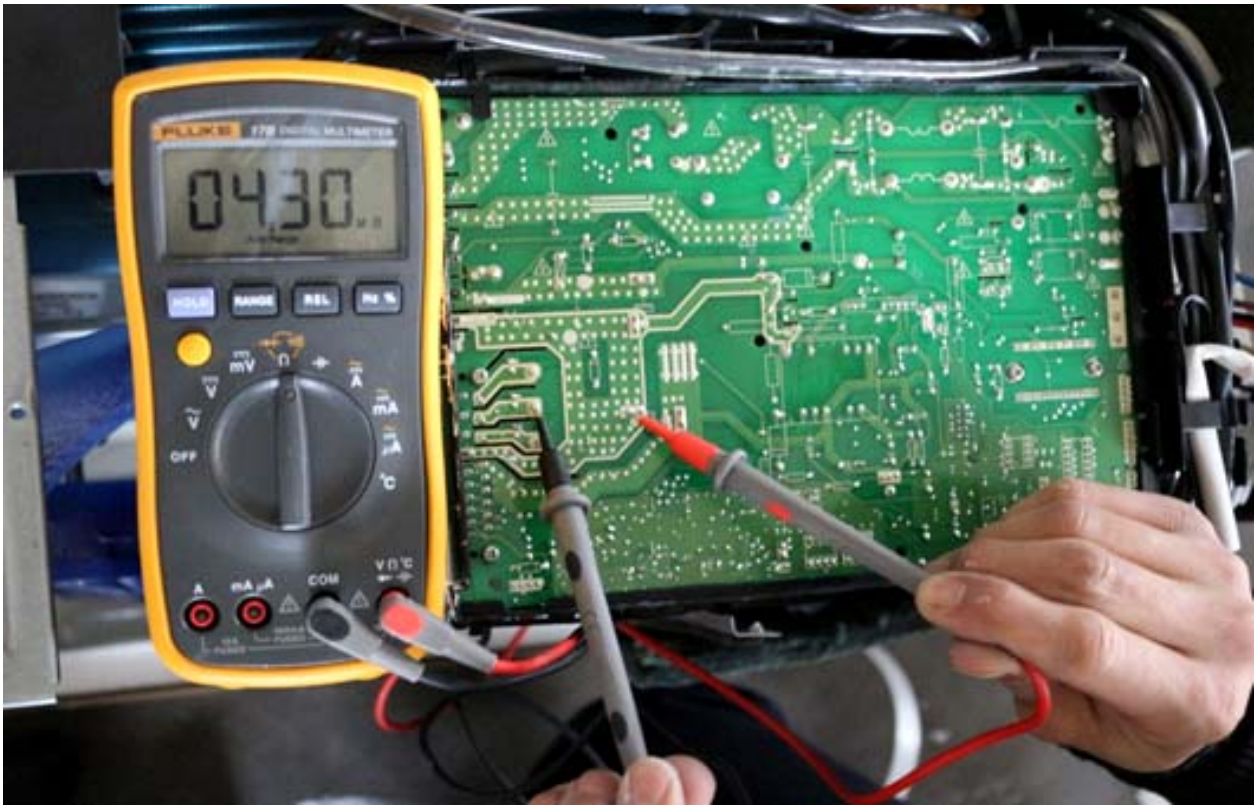

Fig. 35 – P−V

DIAGNOSIS AND SOLUTION (CONT)

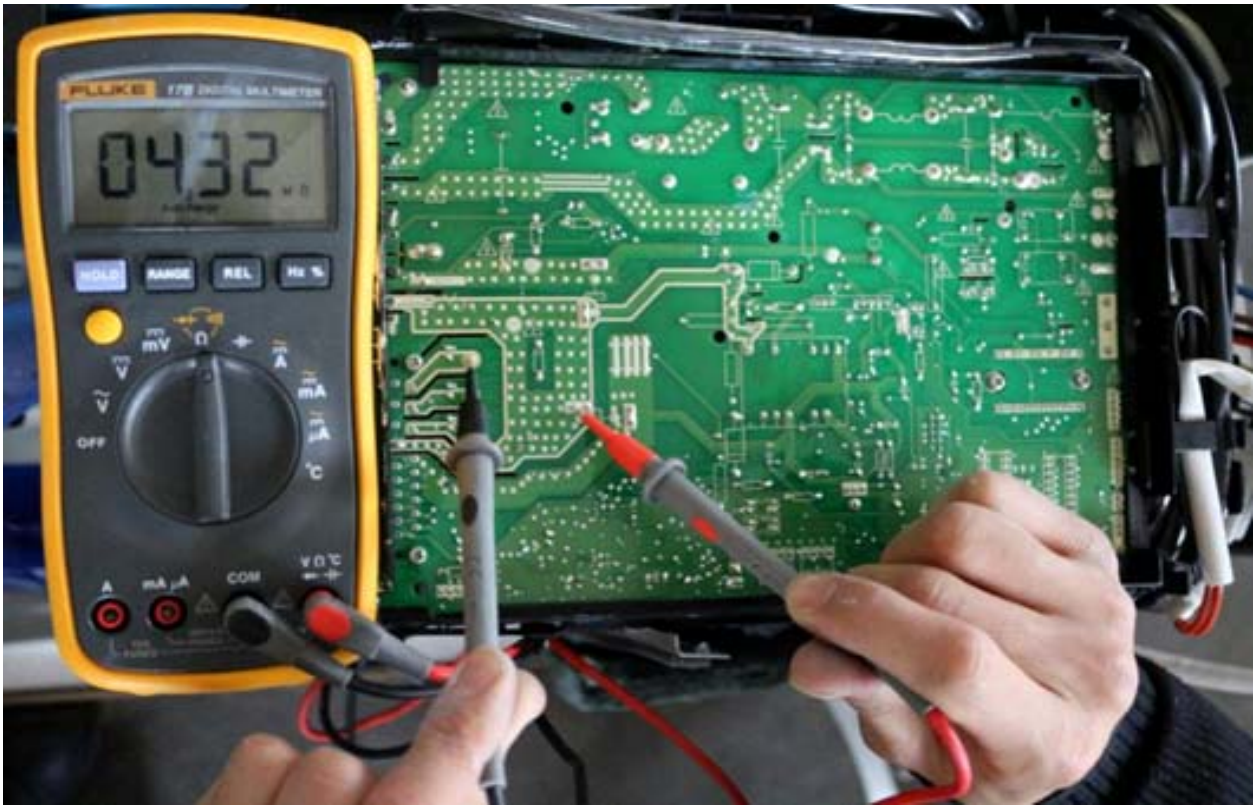

Fig. 36 – P−W

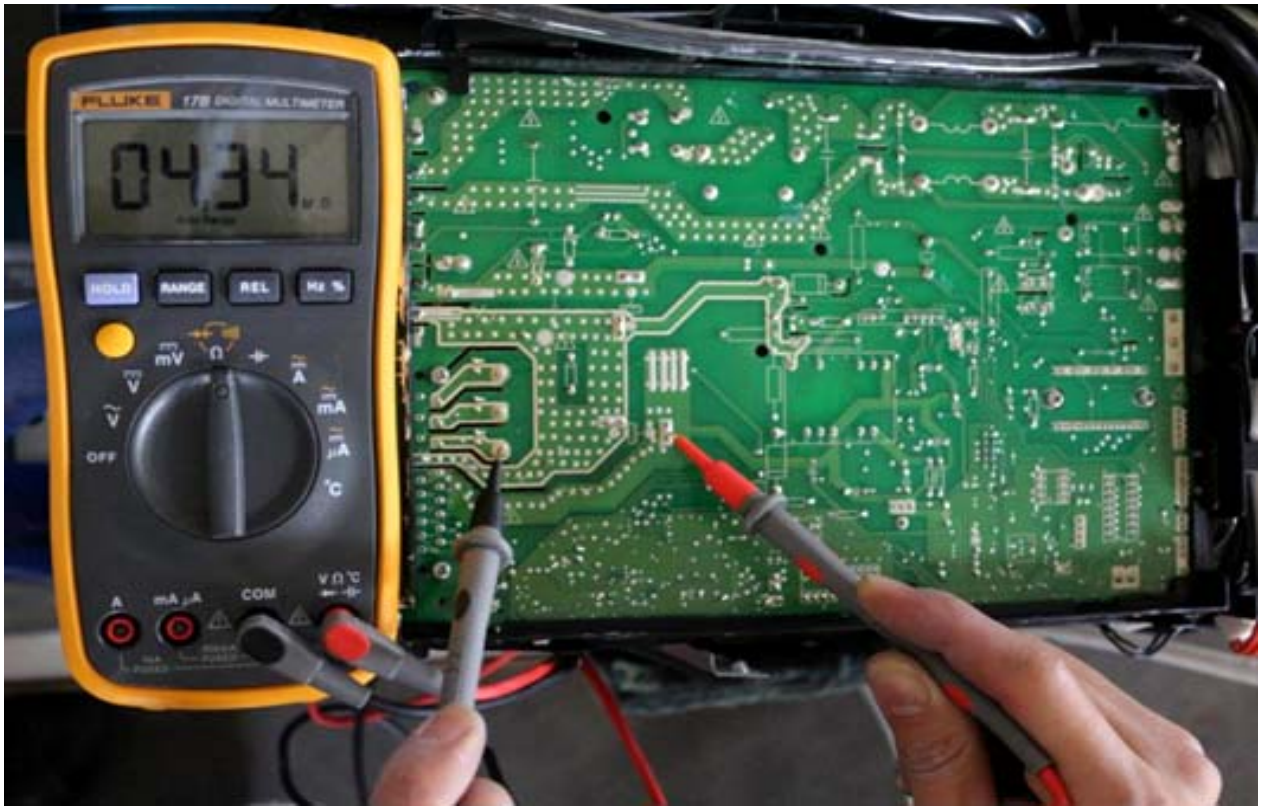

Fig. 37 – N−U

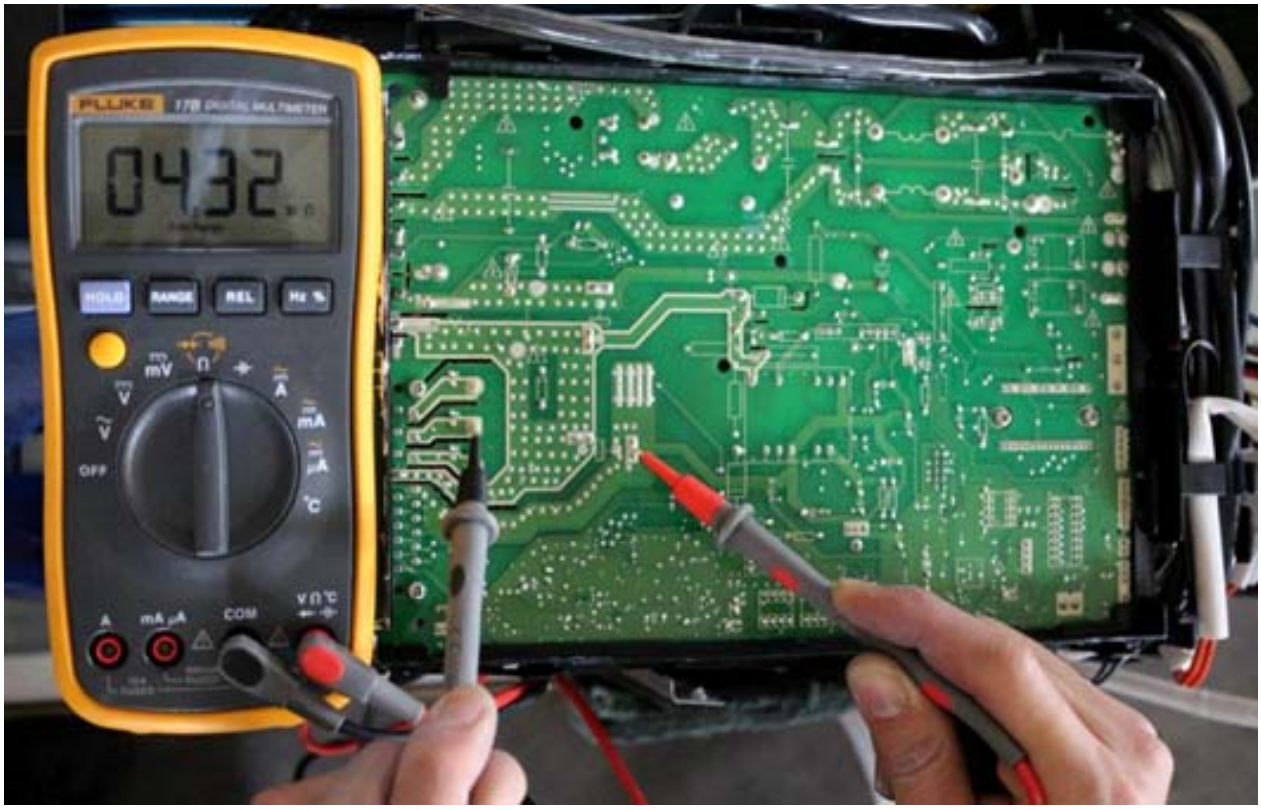

Fig. 38 – N−V

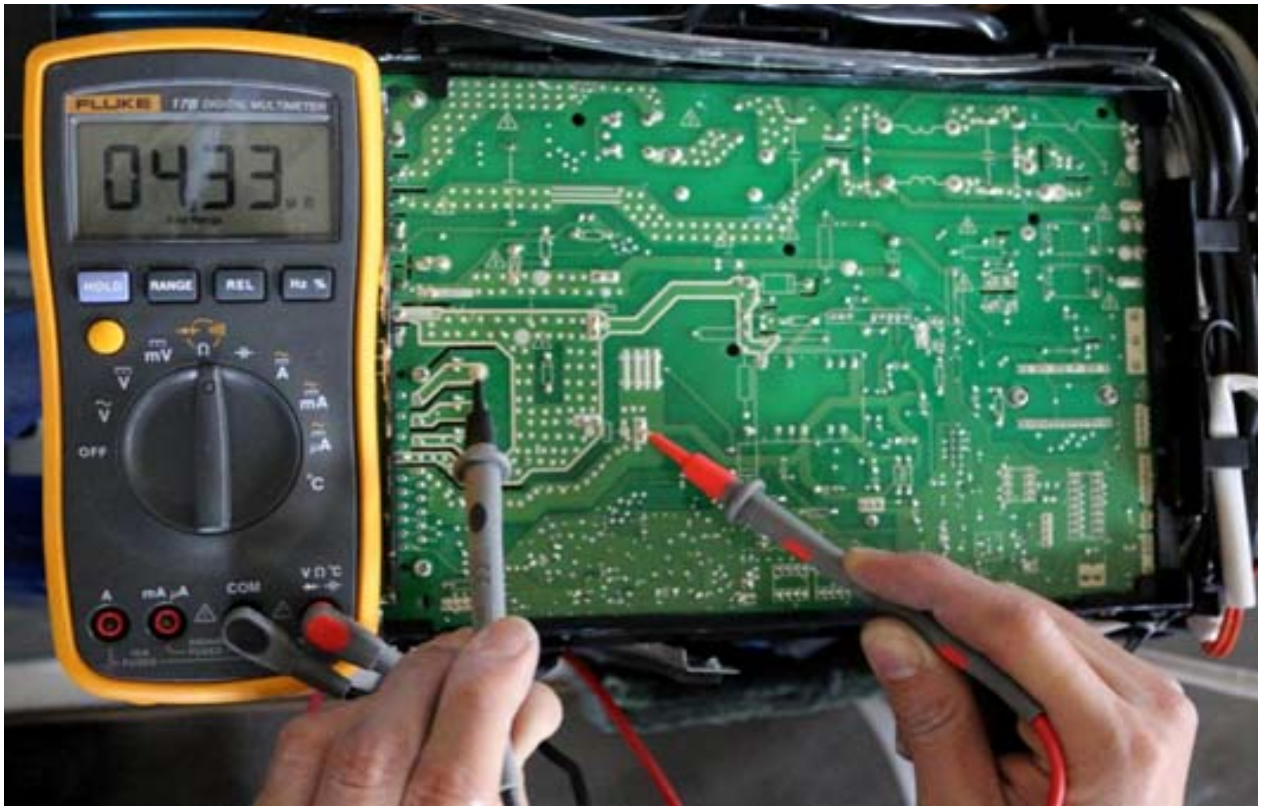

Fig. 39 – N−W

DIAGNOSIS AND SOLUTION (CONT)

Over voltage or too low voltage protection diagnosis and solution (P1)

Error Code	P1
Malfunction decision conditions	An abnormal voltage rise or drop is detected by checking the specified voltage detection circuit.
Supposed causes	·Power supply problems ·System leakage or block ·PCB faulty

Troubleshooting

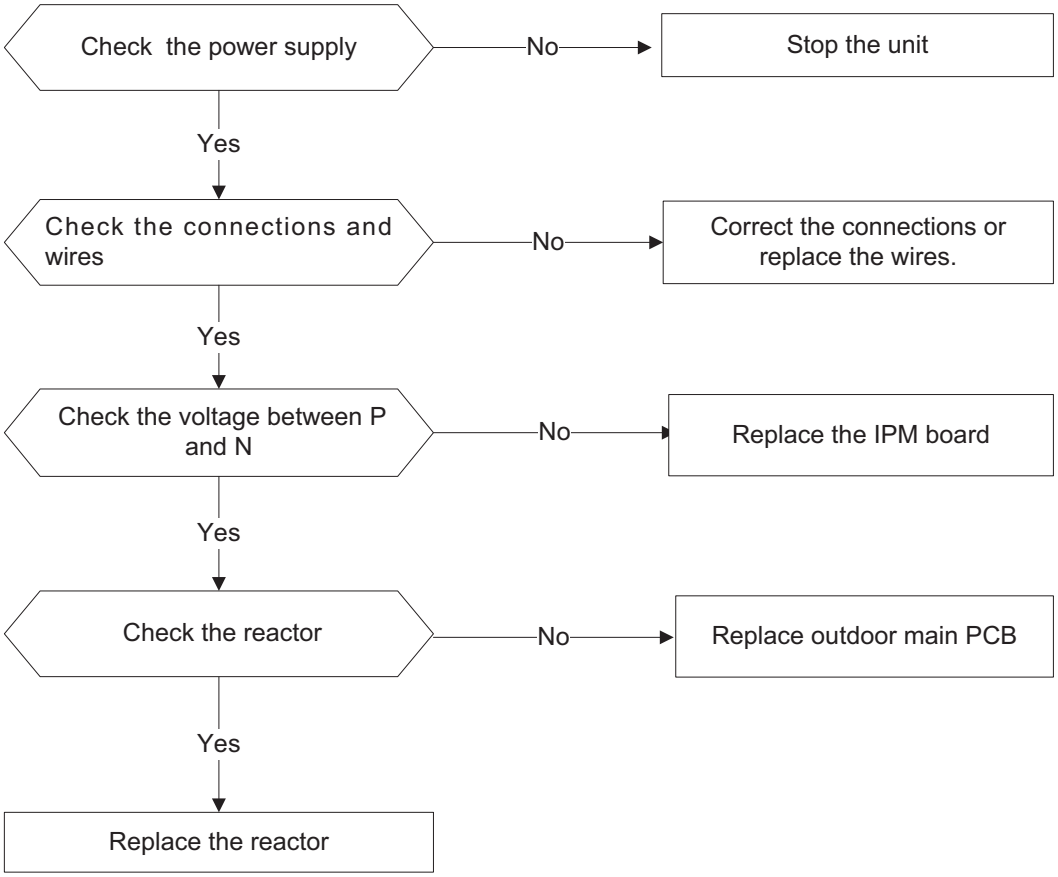

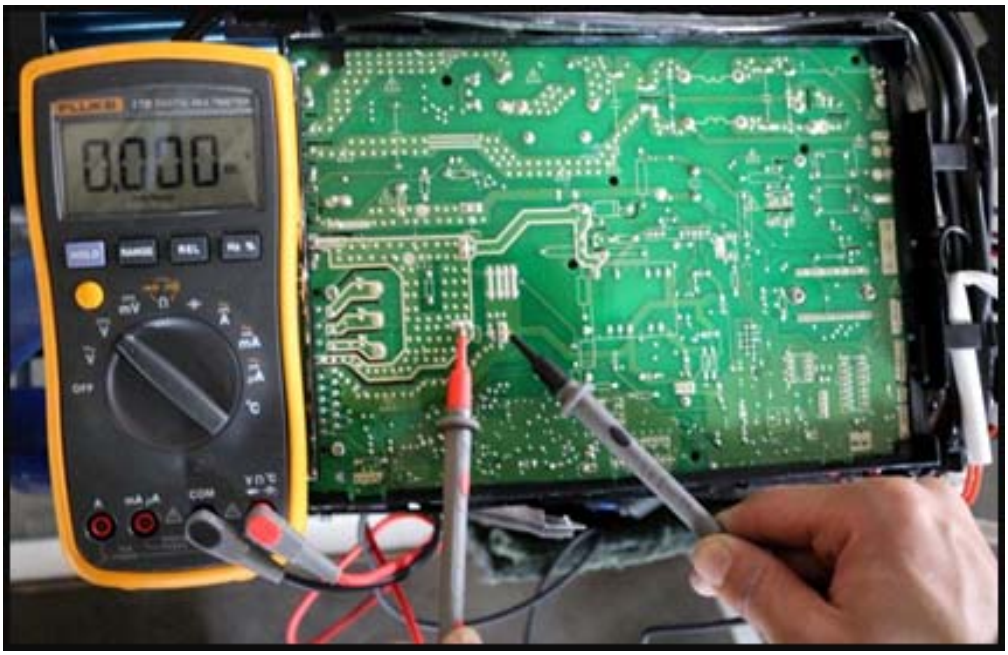

Fig. 40 – Test

NOTE: Measure the DC voltage between the P and N port. The normal value should be around 310V.

DIAGNOSIS AND SOLUTION (CONT)

High temperature protection of compressor top diagnosis and solution (P2)

Error Code	P2
Malfunction decision conditions	If the sampling voltage is not 5V, the LED displays the failure.
Supposed causes	·Power supply problems ·System leakage or block ·PCB faulty

Troubleshooting

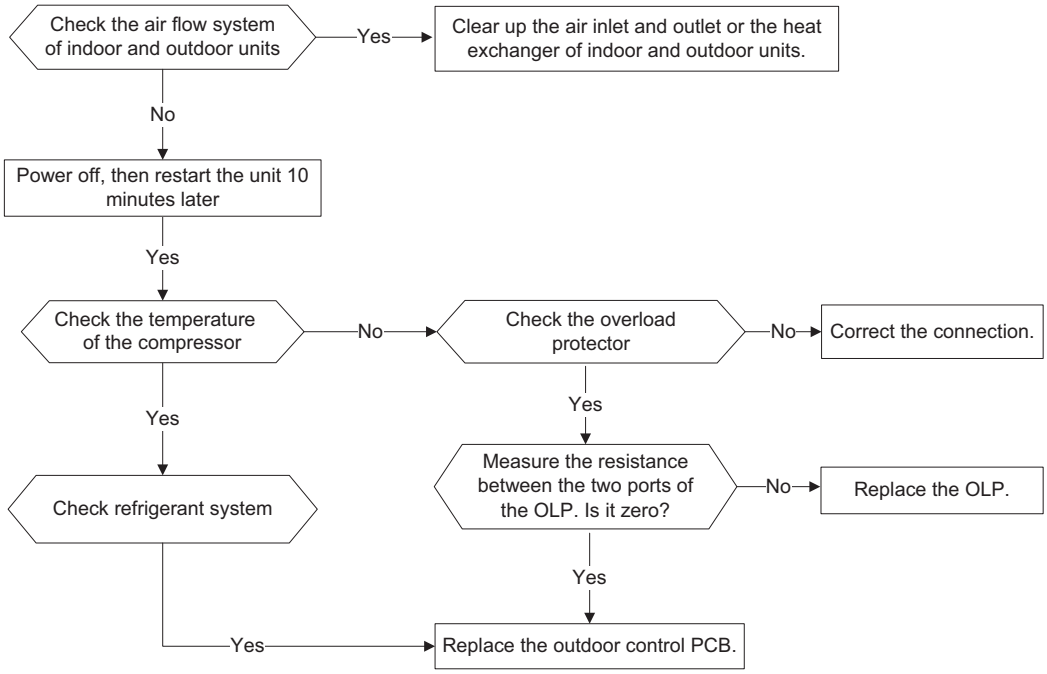

DIAGNOSIS AND SOLUTION (CONT)

Inverter compressor drive error diagnosis and solution (P4)

Error Code	P4
Malfunction decision conditions	An abnormal inverter compressor drive is detected by a special detection circuit, including communication signal detection, voltage detection, compressor rotation speed signal detection, etc..
Supposed causes	·Wiring mistake ·IPM malfunction ·Outdoor fan ass'y faulty ·Compressor malfunction ·Outdoor PCB faulty

Troubleshooting

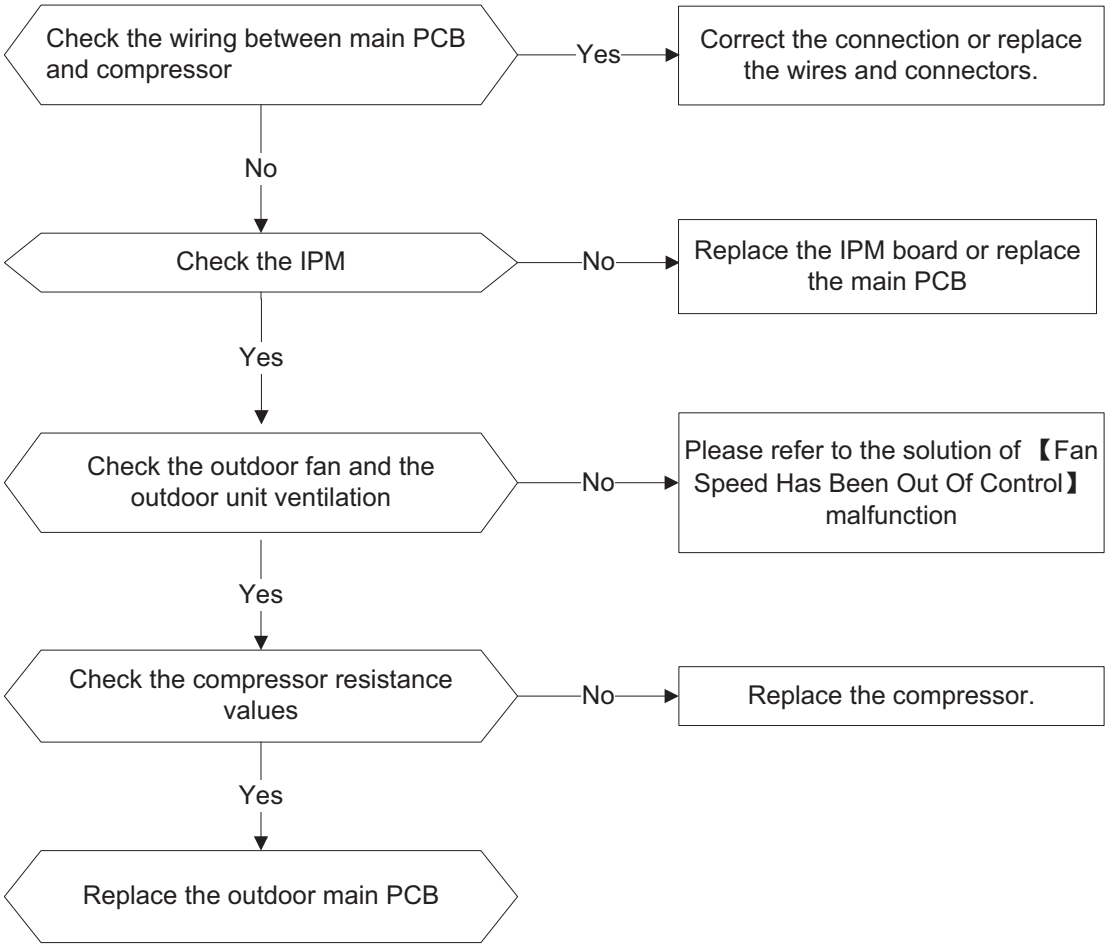

Main Parts Check

Temperature Sensor Checking

Disconnect the temperature sensor from the PCB, measure the resistance value with a tester.

Fig. 41 – Tester

Temperature sensors.
Room temp.(T1) sensor,
Indoor coil temp.(T2) sensor,
Outdoor coil temp.(T3) sensor,
Outdoor ambient temp.(T4) sensor,
Compressor discharge temp.(T5) sensor.
Measure the resistance value of each winding by using the multi−meter.

APPENDIX

Table 21—Temperature Sensor Resistance Value Table for T1, T2, T3, T4 (°C−−K)

°C	°F	K Ohm	°C	°F	K Ohm	°C	°F	K Ohm	°C	°F	K Ohm
−20	−4	115.266	20	68	12.6431	60	140	2.35774	100	212	0.62973
−19	−2	108.146	21	70	12.0561	61	142	2.27249	101	214	0.61148
−18	0	101.517	22	72	11.5	62	144	2.19073	102	216	0.59386
−17	1	96.3423	23	73	10.9731	63	145	2.11241	103	217	0.57683
−16	3	89.5865	24	75	10.4736	64	147	2.03732	104	219	0.56038
−15	5	84.219	25	77	10	65	149	1.96532	105	221	0.54448
−14	7	79.311	26	79	9.55074	66	151	1.89627	106	223	0.52912
−13	9	74.536	27	81	9.12445	67	153	1.83003	107	225	0.51426
−12	10	70.1698	28	82	8.71983	68	154	1.76647	108	226	0.49989
−11	12	66.0898	29	84	8.33566	69	156	1.70547	109	228	0.486
−10	14	62.2756	30	86	7.97078	70	158	1.64691	110	230	0.47256
−9	16	58.7079	31	88	7.62411	71	160	1.59068	111	232	0.45957
−8	18	56.3694	32	90	7.29464	72	162	1.53668	112	234	0.44699
−7	19	52.2438	33	91	6.98142	73	163	1.48481	113	235	0.43482
−6	21	49.3161	34	93	6.68355	74	165	1.43498	114	237	0.42304
−5	23	46.5725	35	95	6.40021	75	167	1.38703	115	239	0.41164
−4	25	44	36	97	6.13059	76	169	1.34105	116	241	0.4006
−3	27	41.5878	37	99	5.87359	77	171	1.29078	117	243	0.38991
−2	28	39.8239	38	100	5.62961	78	172	1.25423	118	244	0.37956
−1	30	37.1988	39	102	5.39689	79	174	1.2133	119	246	0.36954
0	32	35.2024	40	104	5.17519	80	176	1.17393	120	248	0.35982
1	34	33.3269	41	106	4.96392	81	178	1.13604	121	250	0.35042
2	36	31.5635	42	108	4.76253	82	180	1.09958	122	252	0.3413
3	37	29.9058	43	109	4.5705	83	181	1.06448	123	253	0.33246
4	39	28.3459	44	111	4.38736	84	183	1.03069	124	255	0.3239
5	41	26.8778	45	113	4.21263	85	185	0.99815	125	257	0.31559
6	43	25.4954	46	115	4.04589	86	187	0.96681	126	259	0.30754
7	45	24.1932	47	117	3.88673	87	189	0.93662	127	261	0.29974
8	46	22.5662	48	118	3.73476	88	190	0.90753	128	262	0.29216
9	48	21.8094	49	120	3.58962	89	192	0.8795	129	264	0.28482
10	50	20.7184	50	122	3.45097	90	194	0.85248	130	266	0.2777
11	52	19.6891	51	124	3.31847	91	196	0.82643	131	268	0.27078
12	54	18.7177	52	126	3.19183	92	198	0.80132	132	270	0.26408
13	55	17.8005	53	127	3.07075	93	199	0.77709	133	271	0.25757
14	57	16.9341	54	129	2.95896	94	201	0.75373	134	273	0.25125
15	59	16.1156	55	131	2.84421	95	203	0.73119	135	275	0.24512
16	61	15.3418	56	133	2.73823	96	205	0.70944	136	277	0.23916
17	63	14.6181	57	135	2.63682	97	207	0.68844	137	279	0.23338
18	64	13.918	58	136	2.53973	98	208	0.66818	138	280	0.22776
19	66	13.2631	59	138	2.44677	99	210	0.64862	139	282	0.22231

APPENDIX (CONT)

Table 22—Temperature Sensor Resistance Value Table for T1,T2,T3,T4 (°C−−K)

°C	°F	K Ohm	°C	°F	K Ohm	°C	°F	K Ohm	°C	°F	K Ohm
−20	−4	542.7	20	68	68.66	60	140	13.59	100	212	3.702
−19	−2	511.9	21	70	65.62	61	142	13.11	101	214	3.595
−18	0	483	22	72	62.73	62	144	12.65	102	216	3.492
−17	1	455.9	23	73	59.98	63	145	12.21	103	217	3.392
−16	3	430.5	24	75	57.37	64	147	11.79	104	219	3.296
−15	5	406.7	25	77	54.89	65	149	11.38	105	221	3.203
−14	7	384.3	26	79	52.53	66	151	10.99	106	223	3.113
−13	9	363.3	27	81	50.28	67	153	10.61	107	225	3.025
−12	10	343.6	28	82	48.14	68	154	10.25	108	226	2.941
−11	12	325.1	29	84	46.11	69	156	9.902	109	228	2.86
−10	14	307.7	30	86	44.17	70	158	9.569	110	230	2.781
−9	16	291.3	31	88	42.33	71	160	9.248	111	232	2.704
−8	18	275.9	32	90	40.57	72	162	8.94	112	234	2.63
−7	19	261.4	33	91	38.89	73	163	8.643	113	235	2.559
−6	21	247.8	34	93	37.3	74	165	8.358	114	237	2.489
−5	23	234.9	35	95	35.78	75	167	8.084	115	239	2.422
−4	25	222.8	36	97	34.32	76	169	7.82	116	241	2.357
−3	27	211.4	37	99	32.94	77	171	7.566	117	243	2.294
−2	28	200.7	38	100	31.62	78	172	7.321	118	244	2.233
−1	30	190.5	39	102	30.36	79	174	7.086	119	246	2.174
0	32	180.9	40	104	29.15	80	176	6.859	120	248	2.117
1	34	171.9	41	106	28	81	178	6.641	121	250	2.061
2	36	163.3	42	108	26.9	82	180	6.43	122	252	2.007
3	37	155.2	43	109	25.86	83	181	6.228	123	253	1.955
4	39	147.6	44	111	24.85	84	183	6.033	124	255	1.905
5	41	140.4	45	113	23.89	85	185	5.844	125	257	1.856
6	43	133.5	46	115	22.89	86	187	5.663	126	259	1.808
7	45	127.1	47	117	22.1	87	189	5.488	127	261	1.762
8	46	121	48	118	21.26	88	190	5.32	128	262	1.717
9	48	115.2	49	120	20.46	89	192	5.157	129	264	1.674
10	50	109.8	50	122	19.69	90	194	5	130	266	1.632
11	52	104.6	51	124	18.96	91	196	4.849			
12	54	99.69	52	126	18.26	92	198	4.703			
13	55	95.05	53	127	17.58	93	199	4.562			
14	57	90.66	54	129	16.94	94	201	4.426			
15	59	86.49	55	131	16.32	95	203	4.294			
16	61	82.54	56	133	15.73	96	205	4.167			
17	63	78.79	57	135	15.16	97	207	4.045			
18	64	75.24	58	136	14.62	98	208	3.927			
19	66	71.86	59	138	14.09	99	210	3.812			

APPENDIX (CONT)

Table 23—ΔT(° F)=9ΔT(° C)/5

° C	° F	° C	° F	° C	° F	° C	° F	° C	° F
–5	23	21	69.8	51	123.8	82	179.6	113	235.4
–4	24.8	22	71.6	52	125.6	83	181.4	114	237.2
–3	26.6	23	73.4	53	127.4	84	183.2	115	239
–2	28.4	24	75.2	54	129.2	85	185	116	240.8
–1	30.2	25	77	55	131	86	186.8	117	242.6
0	32	25.5	77.9	56	132.8	87	188.6	118	244.4
0.5	32.9	26	78.8	57	134.6	88	190.4	119	246.2
1	33.8	27	80.6	58	136.4	89	192.2	120	248
1.5	34.7	28	82.4	59	138.2	90	194	121	249.8
2	35.6	29	84.2	60	140	91	195.8	122	251.6
2.5	36.5	30	86	61	141.8	92	197.6	123	253.4
3	37.4	31	87.8	62	143.6	93	199.4	124	255.2
3.5	38.3	32	89.6	63	145.4	94	201.2	125	257
4	39.2	33	91.4	64	147.2	95	203	126	258.8
4.5	40.1	34	93.2	65	149	96	204.8	127	260.6
5	41	35	95	66	150.8	97	206.6	128	262.4
6	42.8	36	96.8	67	152.6	98	208.4	129	264.2
7	44.6	37	98.6	68	154.4	99	210.2	130	266
8	46.4	38	100.4	69	156.2	100	212	131	267.8
9	48.2	39	102.2	70	158	101	213.8	132	269.6
10	50	40	104	71	159.8	102	215.6	133	271.4
11	51.8	41	105.8	72	161.6	103	217.4	134	273.2
12	53.6	42	107.6	73	163.4	104	219.2	135	275
13	55.4	43	109.4	74	165.2	105	221	136	276.8
14	57.2	44	111.2	75	167	106	222.8	137	278.6
15	59	45	113	76	168.8	107	224.6	138	280.4
16	60.8	46	114.8	77	170.6	108	226.4	139	282.2
17	62.6	47	116.6	78	172.4	109	228.2	140	284
18	64.4	48	118.4	79	174.2	110	230	141	285.8
19	66.2	49	120.2	80	176	111	231.8	142	287.6
20	68	50	122	81	177.8	112	233.6	143	289.4

Compressor Checking

Measure the resistance value of each winding by using the tester.

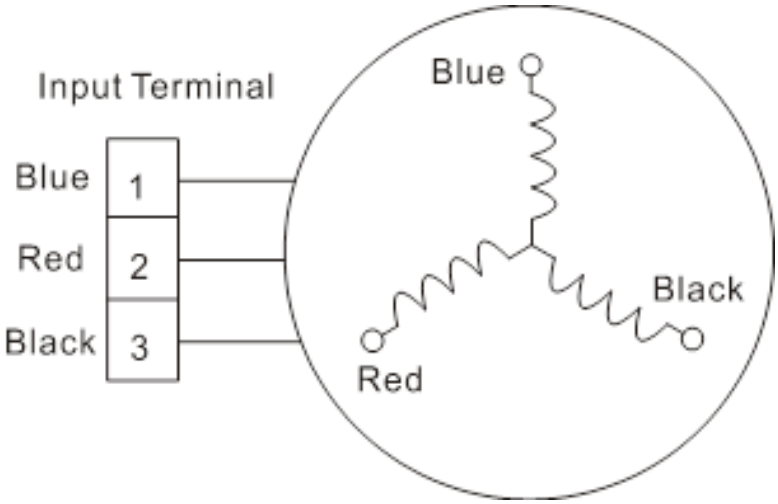

Fig. 42 – Input Terminal

Table 24—Resistance Value

POSITION	RESISTANCE VALUE			
	DA110S1C-30FZ	DA130M1C-31FZ	DA250S2C-30MT	TNB306FPGMC-L
Blue - Red Blue - Black Red - Blue	0.8 Ω (20° C /68° F)	1.77 Ω (20° C /68° F)	0.55 Ω (20° C /68° F)	0.53 Ω (20° C /68° F)

IPM Continuity Check

Turn off the power, let the large capacity electrolytic capacitors discharge completely, and dismount the IPM. Use a digital tester to measure the resistance between P and UVWN; UVW and N.

Table 25—Digital Tester

DIGITAL TESTER		NORMAL RESISTANCE VALUE	DIGITAL TESTER		NORMAL RESISTANCE VALUE
(+)Red	(-)Black	∞ (Several MΩ)	(+)Red	(−)Black	∞ (Several MΩ)
P	N		U	N	
	U		V		
	V		W		
	W		(+)Red		

Pressure on Service Port

Heating Charts

Table 26—Heating Chart

°F (°C)	ODT/IDT	57/53 (13.89/11.67)	47/43 (8.33/6.11)	37/33 (2.78/0.56)	27/33 (−2.78/−5)	17/13 (−8.33/−10.56)
BAR	55	30.3	28.5	25.3	22.8	20.8
BAR	65	32.5	30.0	26.6	25.4	23.3
BAR	75	33.8	31.5	27.8	26.3	24.9

Table 27—Heating Chart

°F (°C)	ODT/IDT	57/53 (13.89/11.67)	47/43 (8.33/6.11)	37/33 (2.78/0.56)	27/33 (−2.78/−5)	17/13 (−8.33/−10.56)
PSI	55	439	413	367	330	302
PSI	65	471	435	386	368	339
PSI	75	489	457	403	381	362

Table 28—Heating Chart

°F (°C)	ODT/IDT	57/53 (13.89/11.67)	47/43 (8.33/6.11)	37/33 (2.78/0.56)	27/33 (−2.78/−5)	17/13 (−8.33/−10.56)
MPA	55	3.03	2.85	2.53	2.28	2.08
MPA	65	3.25	3.00	2.66	2.54	2.33
MPA	75	3.38	3.15	2.78	2.63	2.49

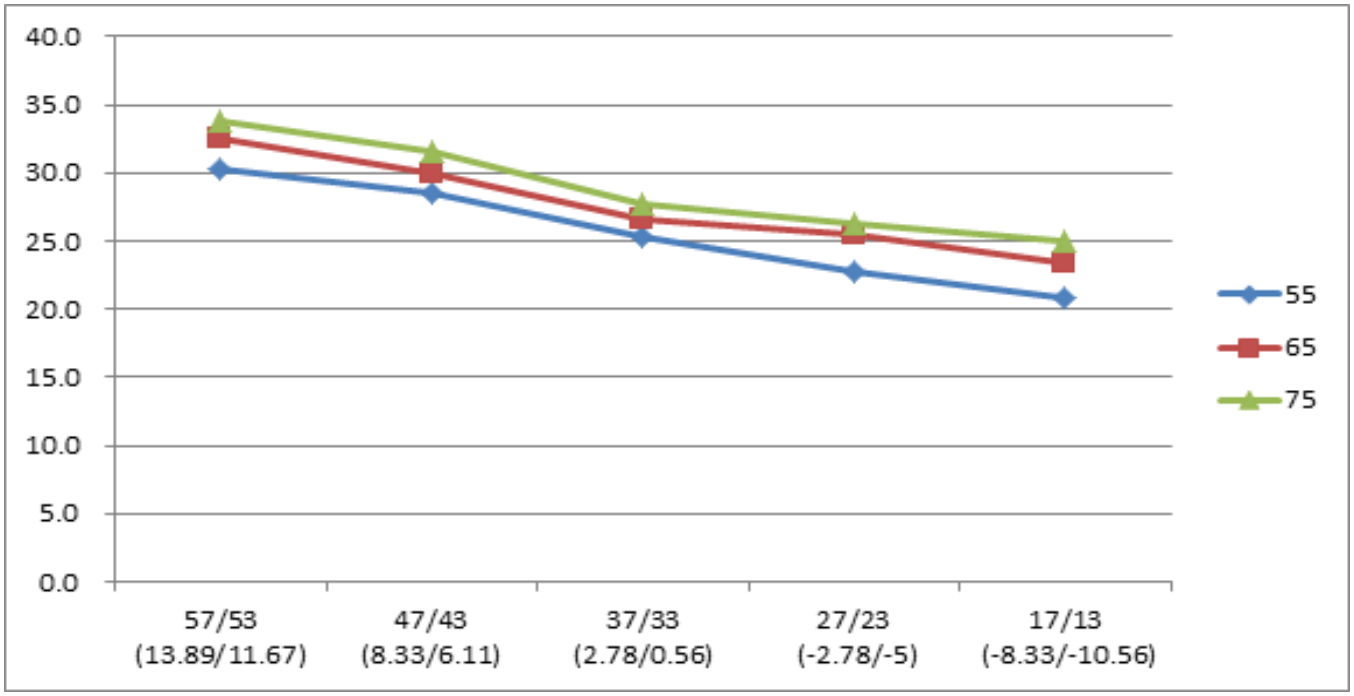

Fig. 43 – Heating Chart

Cooling Charts

Table 29—Cooling Chart

°F (°C)	ODT/IDT	75 (23.89)	85 (29.44)	95 (35)	105 (40.56)	115 (46.11)
BAR	70/59	8.2	7.8	8.1	8.6	10.1
BAR	75/63	8.6	8.3	8.7	9.1	10.7
BAR	80/67	9.3	8.9	9.1	9.6	11.2

Table 30—Cooling Chart

°F (°C)	ODT/IDT	75 (23.89)	85 (29.44)	95 (35)	105 (40.56)	115 (46.11)
PSI	70/59	119	113	117	125	147
PSI	75/63	124	120	126	132	155
PSI	80/67	135	129	132	140	162

Table 31—Cooling Chart

°F (°C)	ODT/IDT	75 (23.89)	85 (29.44)	95 (35)	105 (40.56)	115 (46.11)
MPA	70/59	0.82	0.78	0.81	0.86	1.01
MPA	75/63	0.86	0.83	0.87	0.91	1.07
MPA	80/67	0.93	0.89	0.91	0.96	1.12

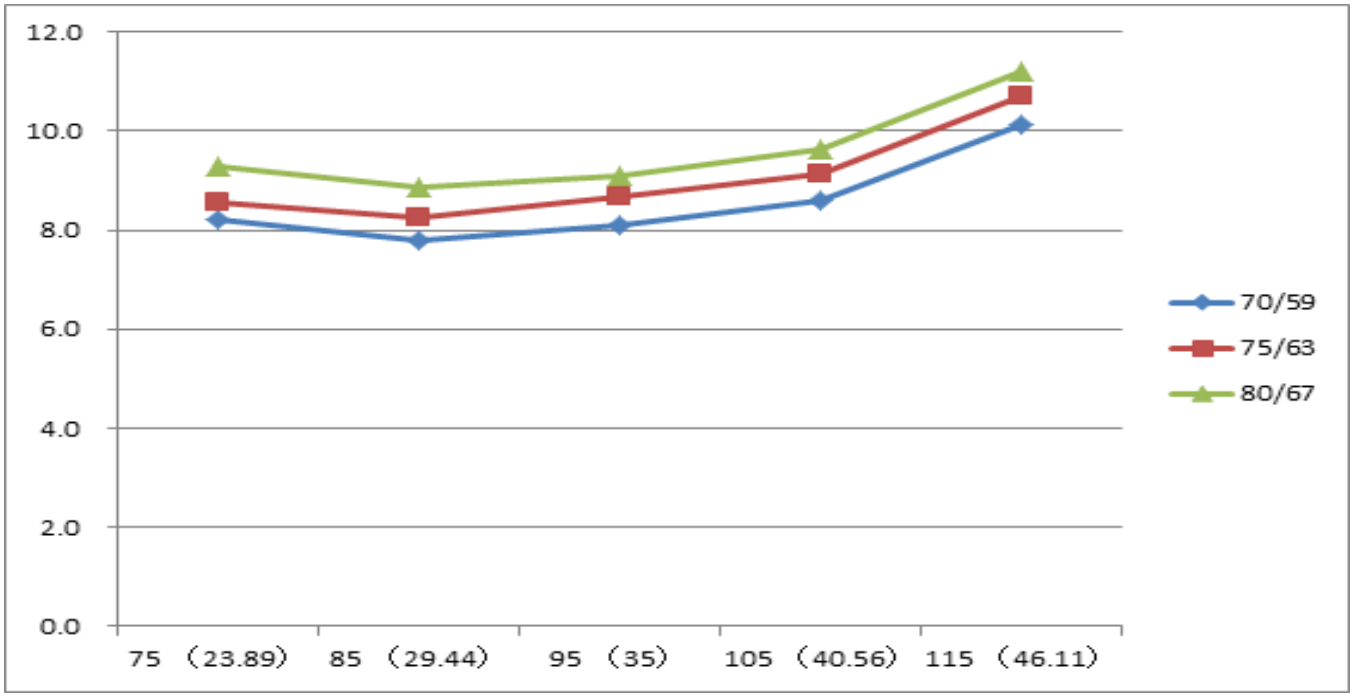

Fig. 44 – Cooling Chart

DISASSEMBLY INSTRUCTIONS SIZES 09−12

NOTE: This part is for reference only, the photos may differ slightly from your actual unit.

No.	Part name	Procedures	Remarks
1	Panel plate	How to remove the panel plate. 1) Stop the air conditioner and turn “OFF” the power breaker. 2) Refer to the images on the right hand side to locate the panel’s screws. 3) Remove the top panel screws and remove the top panel.	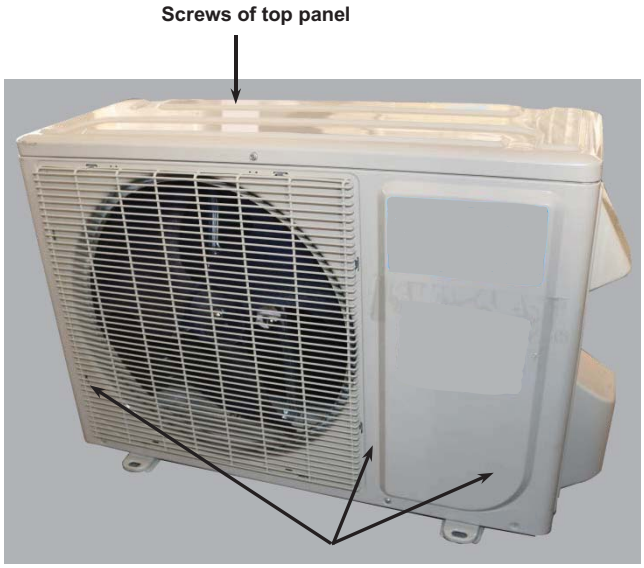 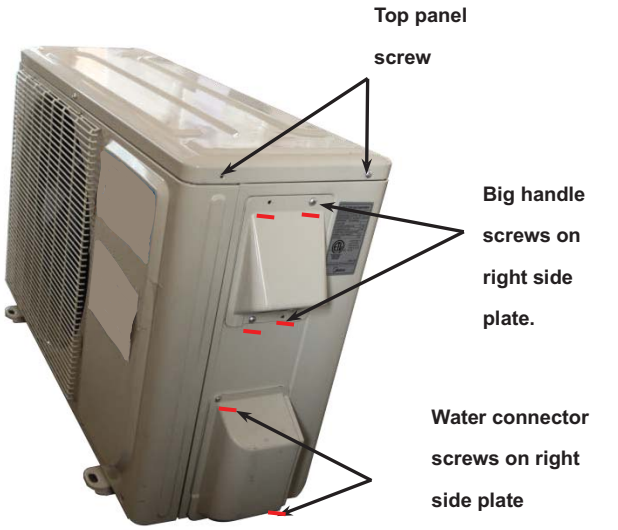 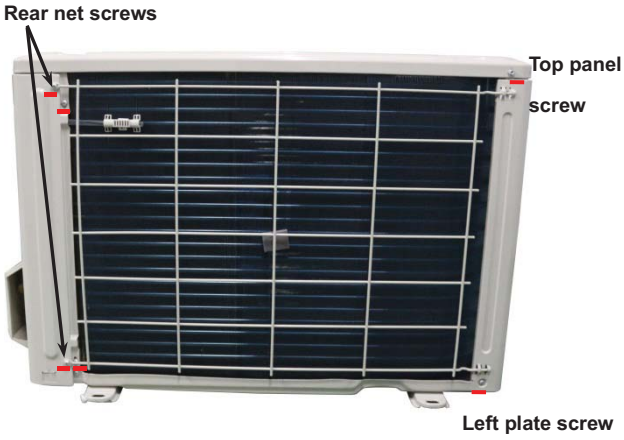

		4) Remove the front panel screws, including the motor holder screws and then remove the front panel. 5) Remove the right side plate screws and remove the right side plate.	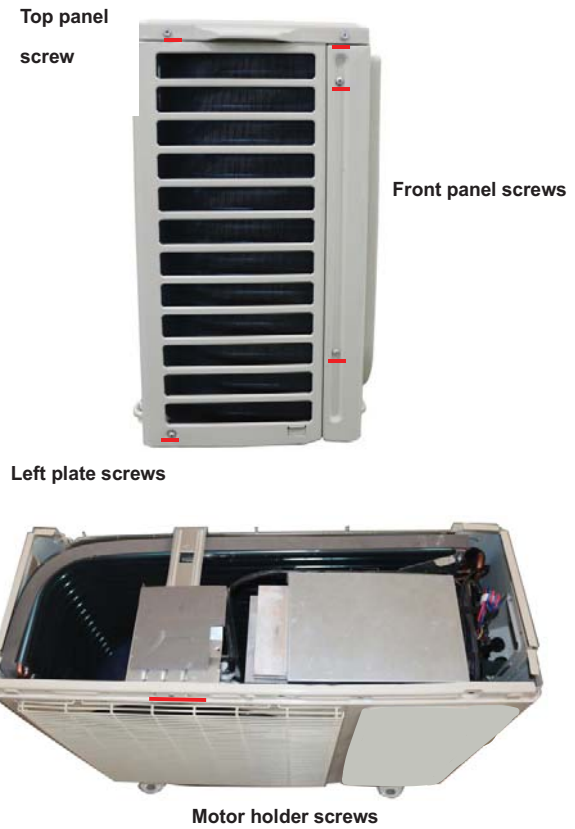
2	Fan assembly	How to remove the fan assembly. 1) Remove the panel plate as stated in section 1 then remove the hex nut securing the fan and then remove the fan.	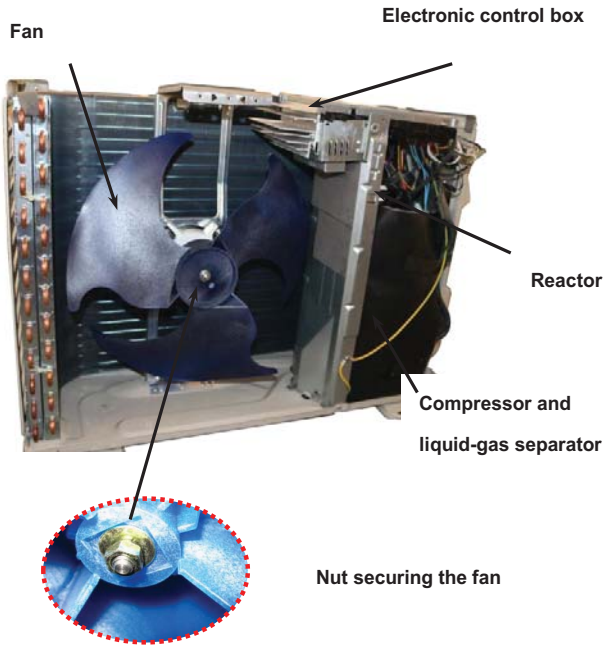

2) Loosen the hooks and then open the electronic control box cover.

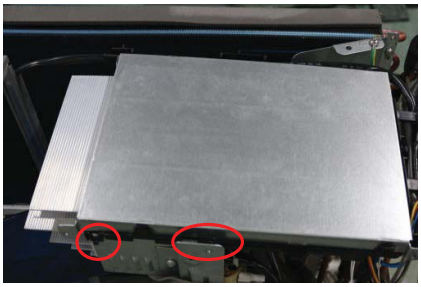

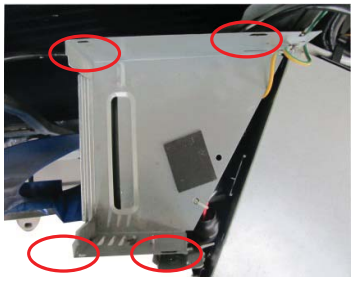

3) Disconnect the fan motor connector from the electronic control board.

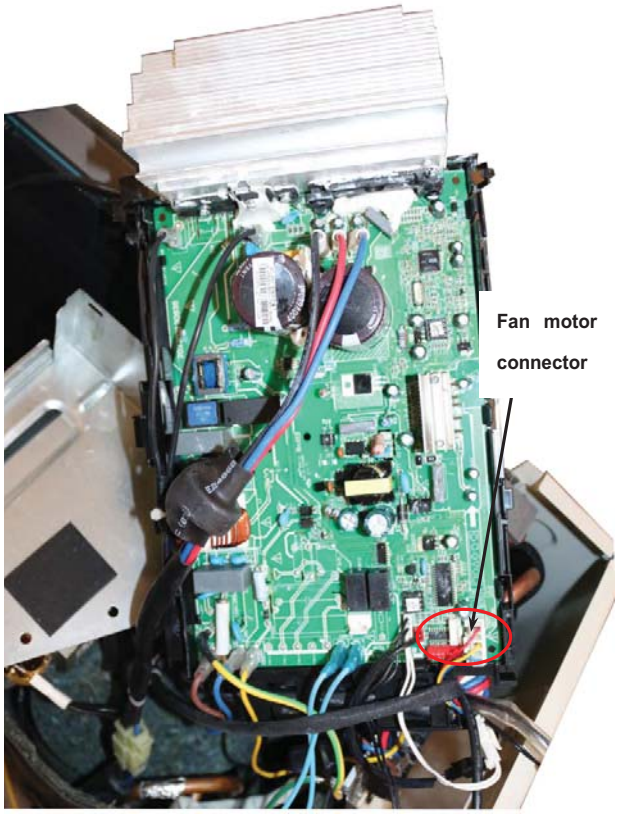

4) Remove the fan motor screws (4).
5) Remove the fan motor.

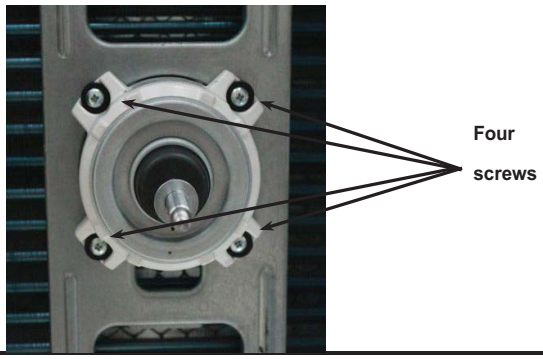

DISASSEMBLY INSTRUCTIONS SIZES 09−12 (CONT)

3	Electrical parts	How to remove the electrical parts. 1) Complete the steps in sections 1 and 2 then remove the 3 connectors for the compressor and the electrical heaters. 2) Release the reactor connector.	
		3) Pull out the two blue wires connected to the four way valve.	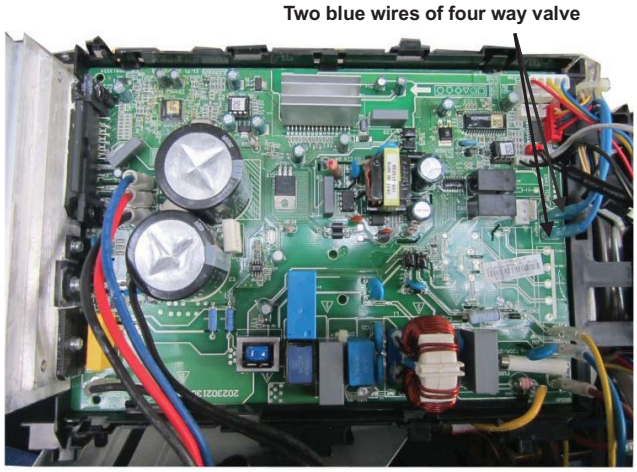
		4) Remove the compressor top temp. sensor connectors, condenser coil temp. sensor (T3), outdoor ambient temp. sensor (T4) and the discharge temp. sensor (T5).	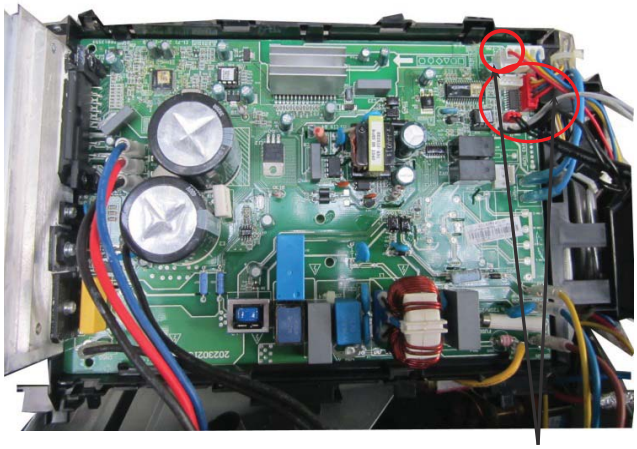

		5) Remove the ground wires. 6) Remove the power supply wires (L1, L2, S). 7) Remove the electronic control box.	
4	Four-way valve	How to remove the four-way valve. 1) Complete the steps in sections 1,2,3. 2) Recover the refrigerant from the refrigerant circuit. 3) Remove the coil screw and then remove the coil. 4) Detach the welded parts of four-way valve and pipe. 5) Remove the four-way valve ass'y.	The picture of four-way valve may be different from the one on your side. 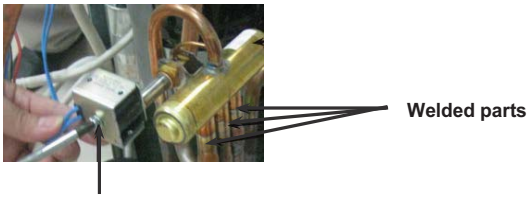

DISASSEMBLY INSTRUCTIONS SIZES 09−12 (CONT)

5	Compressor	How to remove the compressor. 1) Complete the steps in sections 1,2, and 3. 2) Remove the discharge pipe and suction pipe with a burner. 3) Remove the hex nuts and washers securing the compressor on the bottom plate. 4) Lift the compressor from the base pan assembly.	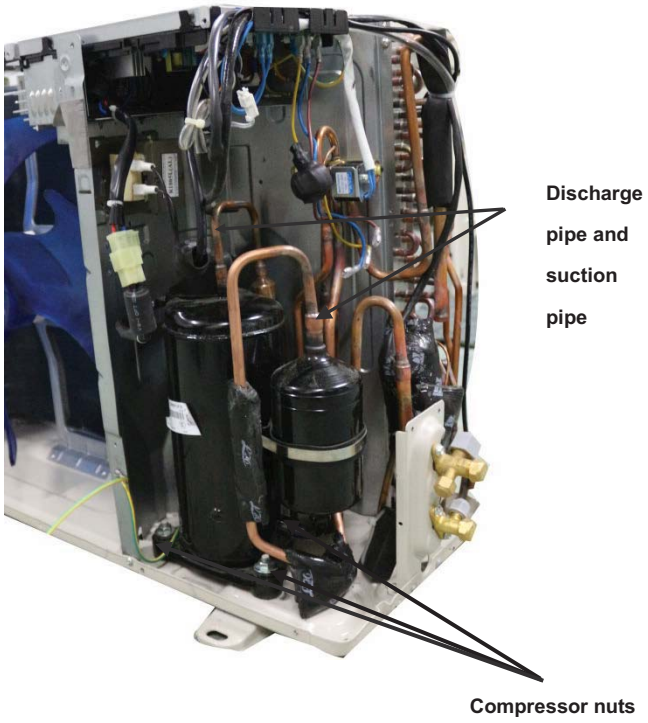

DISASSEMBLY INSTRUCTIONS SIZE 18K

No.	Part name	Procedures	Remarks
1	Panel plate	How to remove the panel plate. 1) Stop the air conditioner and turn “OFF” the power breaker. 2) Refer to the photos on the right to locate the fixing panel screws. 3) Remove the top panel screws and remove the top panel. 4) Remove the front panel screws, including the motor holder securing screws and then remove the front panel.	

DISASSEMBLY INSTRUCTIONS SIZE 18K (CONT)

		5) Remove the right side plate screws and remove the right side plate.	

DISASSEMBLY INSTRUCTIONS SIZE 18K (CONT)

2	Fan ass'y	How to remove the fan ass'y. 1) After you remove the panel plate (see section 1), remove the hex nut securing the fan and then remove the fan. 2) Remove the one screw. Loosen the hooks and open the electronic control box cover. 3) Release the fan motor connector and the four way valve connector.	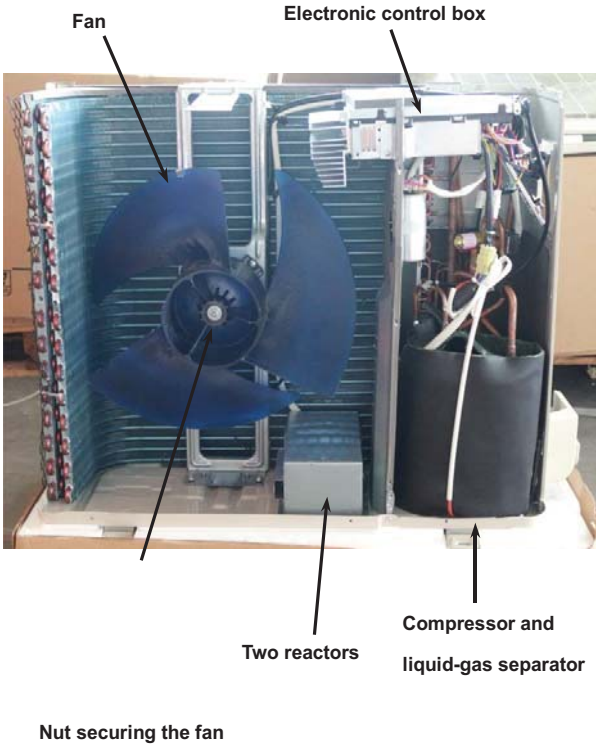 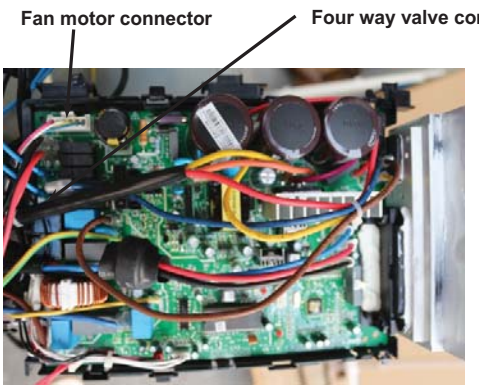

DISASSEMBLY INSTRUCTIONS SIZE 18K (CONT)

		4) Remove the fan motor screws (4). 5) Remove the fan motor.	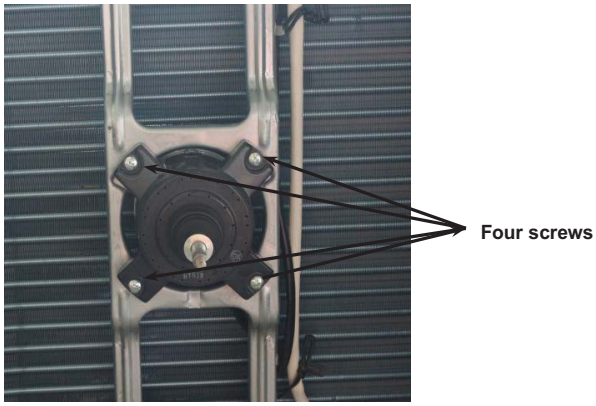
3	Electrical parts	How to remove the electrical parts. 1) Complete the steps in sections 1 and 2, then remove the two compressor connectors and the compressor crankcase heater. 2) Release the three temp. sensor connectors.	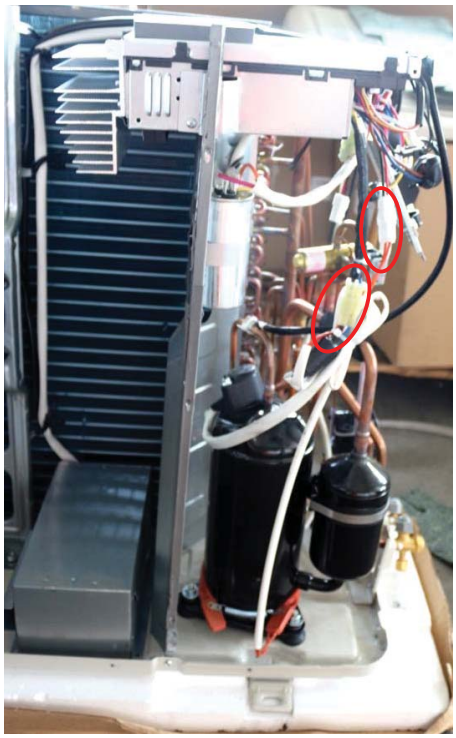 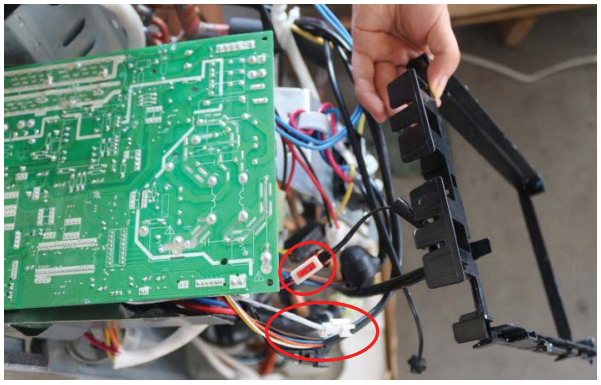

DISASSEMBLY INSTRUCTIONS SIZE 18K (CONT)

		3) Remove the reactor connector.	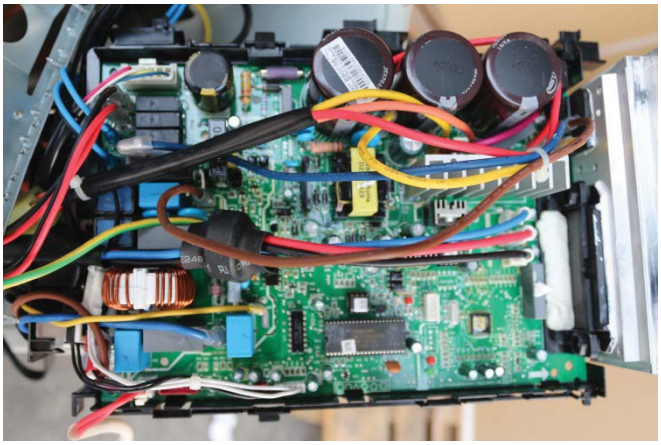
		4) Remove the grounding screw. 5) Remove the power supply wires (L1,L2,S). 6) Remove the electronic control box.	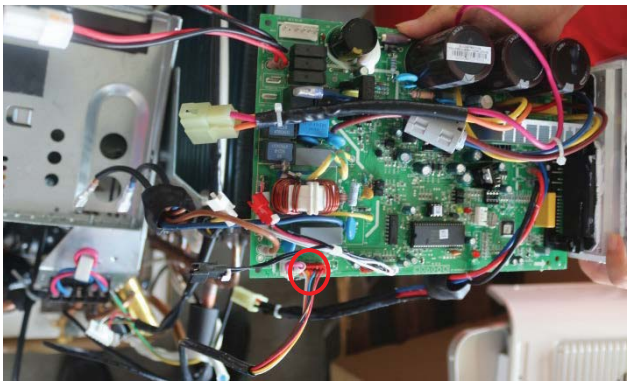

DISASSEMBLY INSTRUCTIONS SIZE 18K (CONT)

4	Four-way valve	How to remove the four-way valve. 1) Complete the steps in sections 1,2, and 3. 2) Recover the refrigerant from the refrigerant circuit. 3) Remove the coil screw then remove the coil. 4) Detach the welded parts of four-way valve and pipe. 5) Remove the four-way valve ass'y.	The picture of four-way valve may be different from the one on your side. 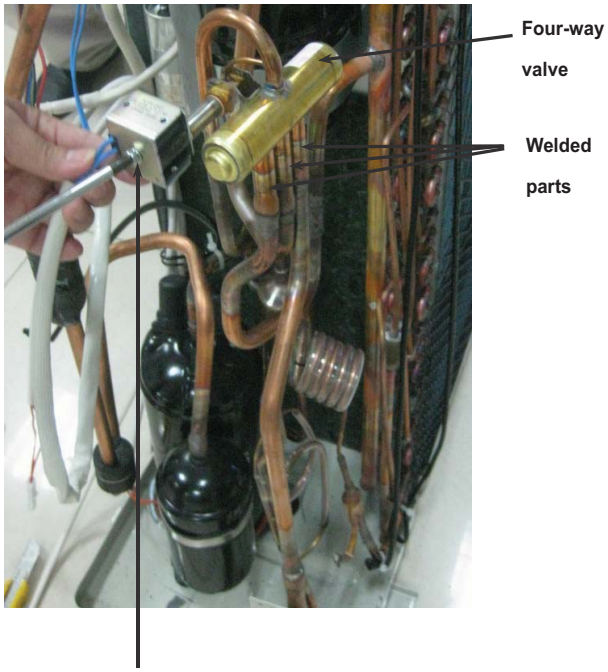
5	Compressor	How to remove the compressor. 1) Complete the steps in sections 1,2, and 3. 2) Remove the discharge pipe and suction pipe with a burner. 3) Remove the hex nuts and washers securing the compressor on the bottom plate. 4) Lift the compressor from the base pan assembly.	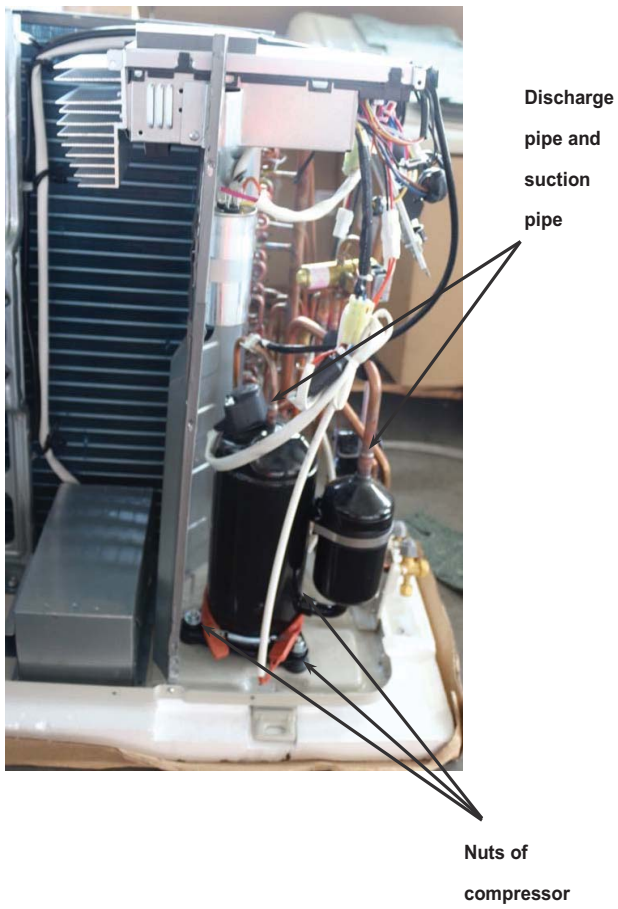

DISASSEMBLY INSTRUCTIONS SIZES 24K − 30K

No.	Part name	Procedures	Remarks
1	Panel plate	How to remove the panel plate. 1) Stop the air conditioner operation and turn “OFF” the power breaker. 2) Refer to the photos on the right to locate the panel screws. 3) Remove the top panel screws and remove the top panel. 4) Remove the front panel screws, including the motor holder screws and then remove the front panel.	 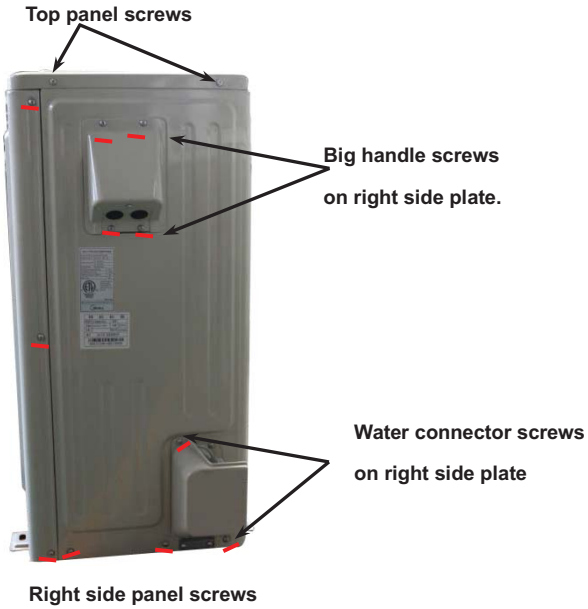

DISASSEMBLY INSTRUCTIONS SIZES 24K − 30K (CONT)

5) Remove the right side plate screws and remove the right side plate.

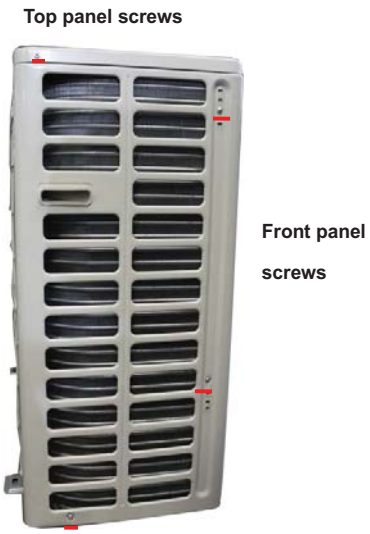

DISASSEMBLY INSTRUCTIONS SIZES 24K − 30K (CONT)

2	Fan ass'y	How to remove the fan ass'y. 1) After removing the panel plate (see section 1), remove the hex nut securing the fan and remove the fan.	
			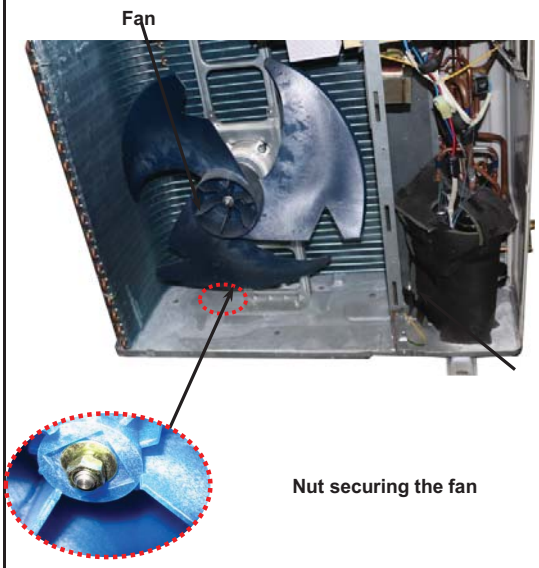

DISASSEMBLY INSTRUCTIONS SIZES 24K − 30K (CONT)

		2) Remove the fan motor connector. 3) Remove the four screws and then remove the fan motor.	
3	Electrical parts	How to remove the electrical parts. 1) Complete the steps in sections 1 and 2, then remove the compressor connector.	

DISASSEMBLY INSTRUCTIONS SIZES 24K − 30K (CONT)

		2) Remove the screws securing the IPM board.	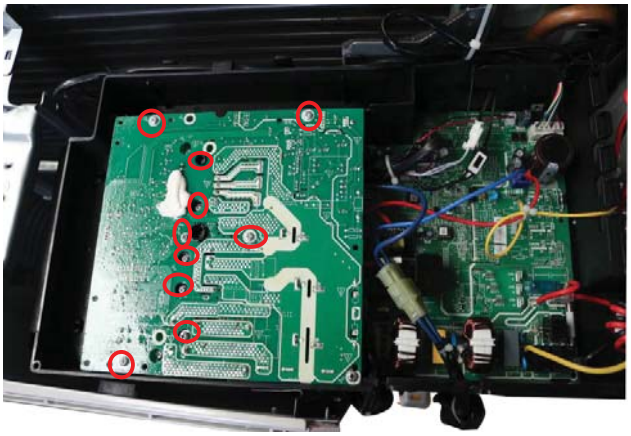
		3) Release the three temp. sensor connectors. 4) Remove the two blue wires connected to the four way valve.	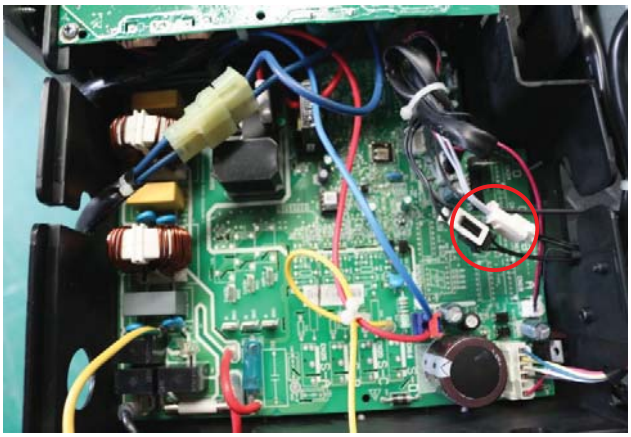

		5) Remove the compressor top temp. sensor connectors, condenser coil temp. sensor (T3),outdoor ambient temp. sensor (T4) and discharge temp. sensor (T5).	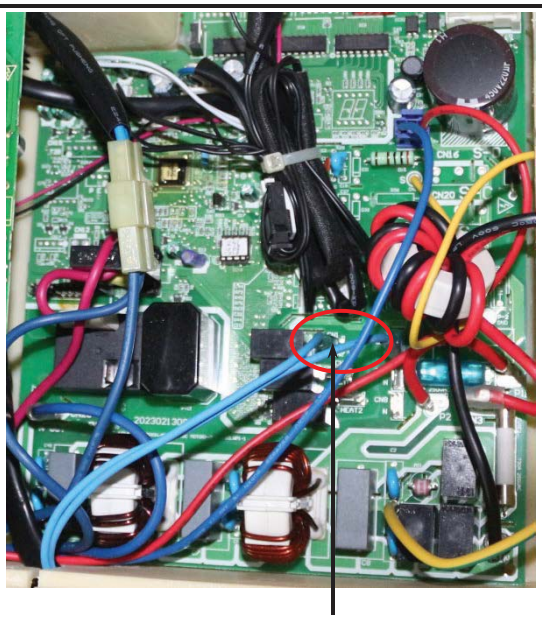 Two blue wires of the four way valve
		1) Remove the power supply wires (L1, L2, S). 2) Remove the electronic control box.	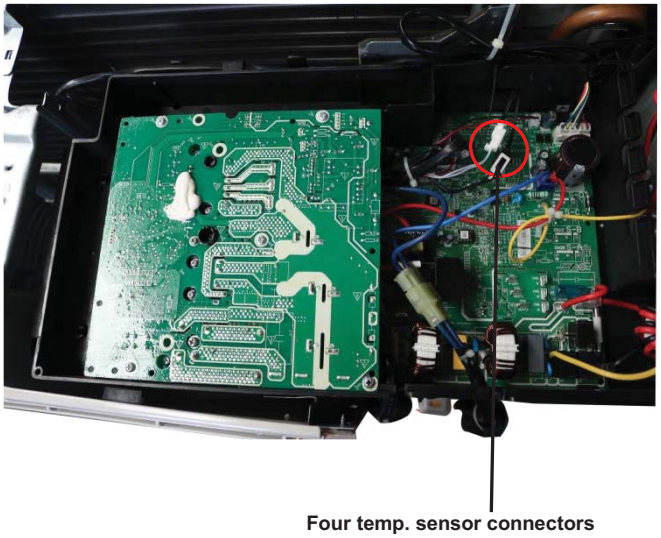 Four temp. sensor connectors

DISASSEMBLY INSTRUCTIONS SIZES 24K − 30K (CONT)

4	Four-way valve	How to remove the four-way valve. 1) Complete the steps in sections 1,2, and 3. 2) Recover the refrigerant from the refrigerant circuit. 3) Remove the coil screw and then remove the coil. 4) Detach the welded parts of the four-way valve and the pipe. 5) Remove the four-way valve ass'y.	The picture of the four-way valve may differ from the actual valve. 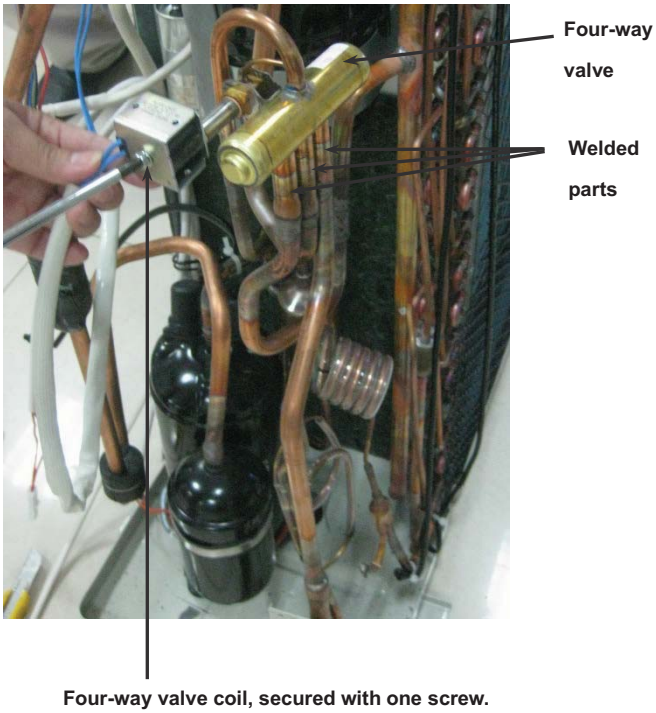

DISASSEMBLY INSTRUCTIONS SIZES 24K − 30K (CONT)

5	Compressor	How to remove the compressor. 1) Complete the steps in sections 1, 2 and 3. 2) Remove the discharge pipe and suction pipe with a burner. 3) Remove the hex nuts and washers securing the compressor on the bottom plate. 4) Lift the compressor from the base pan assembly.	

©2016 Bryant Heating & Cooling Systems • 7310 W. Morris St. • Indianapolis, IN 46231
Edition Date: 09/16

Catalog No. SM538PR−01

Manufacturer reserves the right to discontinue, or change at any time, specifications or designs without notice and without incurring obligations.

Replaces: NEW