Product Data

Fig. 1 — Size 36K

Fig. 2 — Sizes 48K - 58K

NOTE: Images are for illustration purposes only. Actual models may differ slightly.

INDUSTRY LEADING FEATURES / BENEFITS

A PERFECT BALANCE BETWEEN BUDGET LIMITS, ENERGY SAVINGS AND COMFORT

The **38MBRC** series ductless system is a matched combination of an outdoor condensing unit and an indoor fan coil unit connected only by refrigerant tubing and wires. The ductless system permits creative solutions for design problems such as:

- **Add-ons to current space (an office or family room addition)**
- **Special space requirements**
- **When adding air conditioning to spaces that are heated by hydronic or electric heat and have no ductwork**
- **Historical renovations or any application where preserving the look of the original structure is essential.**

Advanced system components incorporate innovative technology to provide reliable cooling and heating performance at low sound levels.

TABLE OF CONTENTS

PAGE
INDUSTRY LEADING FEATURES / BENEFITS 1
MODEL NUMBER NOMENCLATURE 3
STANDARD FEATURES AND ACCESSORIES. 4
SPECIFICATIONS 5
PERFORMANCE 6
DIMENSIONS 12
CLEARANCES. 15
COOLING PERFORMANCE - AHU 16
HEATING PERFORMANCE - AHU. 25
APPLICATION DATA. 34
WIRING 35
SOUND PRESSURE IN OCTAVE BANDS 36
FAN AND MOTOR SPECIFICATIONS 37
WIRING DIAGRAMS 38
GUIDE SPECIFICATIONS 40

Inverter Technology

The inverter driven compressor is designed to run at various input power frequencies (Hz) which controls the compressor's motor speed.

Even Temperature – The control package, including the inverter, monitors the outdoor and indoor temperatures as they relate to the selected indoor set point and adjusts the compressor speed to match the load and keep the system operating continuously rather than cycling and creating temperature swings. This translates to higher comfort levels for the occupants.

Rapid Pull Down/Warm-Up – Comfort is increased by the inverter system's ability to ramp up the compressor speed enabling the system to reach the user selected room temperature set point quicker.

Humidity Control – Running the system for longer periods and continuously varying the compressor speed enhances the humidity control.

Individual Room Comfort

Maximum comfort is provided because each space can be controlled individually based on the usage pattern.

Low Sound Levels

When noise is a concern, ductless systems are the answer. When sound ordinances and proximity to neighbors demand quiet operation, the **38MBRC** unit is the right choice. With the inverter technology, these units run at lower speeds most of the time resulting in reduced sound levels.

Inverter Technology – Enhanced Economical Operation

Ductless systems are inherently economical to operate. Individual rooms are heated or cooled only when required, and since the air is delivered directly to the space, there is no need to use additional energy to move the air in the ductwork. This economical operation is enhanced further when the inverter system output matches the load resulting in a more efficient system.

Easy-To-Use Controls

The systems have microprocessor-based controls which provide the ultimate in comfort and efficiency. The user friendly wired and wireless remote controls provide the interface between the user and the unit.

Secure Operation

If security is an issue, outdoor and indoor units are connected only by refrigerant piping and wiring to prevent intruders from crawling through ductwork or wall openings. In addition, since the **38MBRC** can be installed close to an outside wall, coils are protected from vandals and severe weather.

Fast Installation

This compact ductless system is simple to install. Only wires and piping need to run between the indoor and outdoor units. These units are fast and easy to install ensuring minimal disruption to customers in homes or the workplace. This makes the **38MBRC** systems the equipment of choice for retrofit applications.

Simple Servicing and Maintenance

Removing the top panel (36K) or side panel (48K and 58K) of the outdoor unit provides immediate access to the control compartment, providing the service technician access to the diagnostic components to facilitate the troubleshooting process. In addition, the draw-thru design of the outdoor unit means that dirt accumulates on the outside surface of the coil. Coils can be cleaned quickly from the inside using a pressure hose and detergent.

On the indoor units, service and maintenance expense is reduced due to readily accessible filters. Also, error codes are displayed to alert the user to certain system malfunctions

Built-in Reliability

Ductless system indoor and outdoor units are designed to provide years of trouble-free operation. Both the indoor and outdoor units are well protected. Whenever the microprocessor detects abnormal conditions, the unit stops and an error code appears. Inverter systems provide additional reliability due to the soft start. This refers to the ability of the inverter to start the compressor motor using reduced voltage and reduced current. This feature is beneficial from an electrical standpoint (eliminates current spikes) as well as an overall reliability standpoint due to reduced stress on all associated system components.

Agency Listings

All systems are listed with AHRI (Air conditioning, Heating, and Refrigeration Institute) and are CSA C22.2 No. 60335-2-40 certified per UL 60335-2-40 standard.

Manufacturer reserves the right to change, at any time, specifications and designs without notice and without obligations.

MODEL NUMBER NOMENCLATURE

OUTDOOR UNIT

38 MB R C Q 36 A A 3

38 = OUTDOOR UNIT

MB = MODEL

SYSTEM TYPE
R = OUTDOOR

MAJOR SERIES

UNIT TYPE
Q = HEAT PUMP

NOMINAL CAPACITY
36 - 3 TONS
48 - 4 TONS
58 - 5 TONS

VOLTAGE
3 = 208/230-1-60

VARIATIONS
A = STANDARD

MAXIMUM NUMBER OF FAN COIL UNITS THAT CAN BE CONNECTED TO THE OUTDOOR UNIT
A = 1

Use of the AHRI Certified TM Mark indicates a manufacturer's participation in the program For verification of certification for individual products, go to www.ahridirectory.org.

STANDARD FEATURES AND ACCESSORIES

Table 1 — Standard Features

EASE OF INSTALLATION	
Low Voltage Controls	S
COMFORT FEATURES	
Microprocessor Control	S
Auto Restart Function	S
Auto Changeover	S
ENERGY SAVING FEATURES	
Inverter Driven Compressor	S
46° F Heating Mode (Heating Setback)	S
SAFETY AND RELIABILITY	S
3 Minute Time Delay For Compressor	S
High Compressor Discharge Temperature	S
Over Current Protection for Compressor	S
Low Voltage Protection	S
Compressor Overload Protection	S
Compressor Over Current Protection	S
IPM Module Protection	S
Condenser High Temperature Protection in Cooling Mode	
Aluminum Hydrophilic pre-coated fins	S
EASE OF SERVICE AND MAINTENANCE	
Diagnostics	S
Liquid Line Pressure Taps	S
APPLICATION FLEXIBILITY	
Crankcase Heater	S
Base pan Heater	S

LEGEND
S - Standard
A - Accessory

ACCESSORIES

Table 2 — Accessories

OUTDOOR UNIT MODEL NUMBER PER UNIT	BASE PAN BASE RUBBER PLUGS RCD PART NO.	QUANTITY PER UNIT
38MBRCQ36AA3	12600801A00117	5
38MBRCQ48AA3	12600801A00118	5
38MBRCQ58AA3		

NOTE: Basepan built in with multiple holes for proper draining during defrost. For applications where it is required to seal these holes, and redirect the condensate drain, rubber plugs are available through RCD.

Outdoor Units

Crankcase Heater

The crankcase heater is standard on all unit sizes.

Base pan Heater

The base pan heater is standard on all unit sizes.

Long Line Piping Length

Piping flexibility up to a total piping length of 213ft. (65m).

SPECIFICATIONS

Table 3 — Specifications

OUTDOOR - HEAT PUMP					
SYSTEM	**OUTDOOR SIZE**		**36K**	**48K**	**58K**
Electrical	Voltage, Phase, Cycle	V/Ph/Hz	208/230-1-60	208/230-1-60	208/230-1-60
	MCA	A.	30	39	42
	Recommended Fuse Size	A.	35	40	40
	MOCP - Fuse Rating	A.	45	50	60
Operating Range	Cooling Outdoor DB Min - Max	°F(°C)	5~122(-15~50)	5~122(-15~50)	5~122(-15~50)
	Heating Outdoor DB Min - Max	°F(°C)	-13~75(-25~24)	-13~75(-25~24)	-13~75(-25~24)
Piping	Total Piping Length	ft (m)	213 (65)	213 (65)	213 (65)
	Piping Lift*	ft (m)	98 (30)	98 (30)	98 (30)
	Pipe Connection Size - Liquid	in (mm)	3/8 (9.52)	3/8 (9.52)	3/8 (9.52)
	Pipe Connection Size - Suction	in (mm)	5/8 (16)	5/8 (16)	7/8 (22)
Refrigerant	Type		R410A	R410A	R410A
	Charge	lbs (kg)	6.72 (3.05)	9.26 (4.2)	10.58 (4.8)
	Additional Refrigerant Charge (between standard and maximum Piping Lengths)	Oz/ft (g/m)	0.32 (30)	0.32 (30)	0.32 (30)
	Metering Device		EXV	EXV	EXV + Capillary
Outdoor Coil	Face Area	Sq. Ft.	8.0	13.6	26.7
	No. Rows		2	2	3
	Fins per inch		18	18	18
	Circuits		4	8	14
Compressor	Type		Rotary Inverter	Rotary Inverter	Rotary Inverter
	Model		ATF310D43UMT	ATQ420D1UMU	KTQ420D1UMU
	Oil Type		VG74	VG74	VG74
	Oil Charge	Fl. Oz.	28.2	39.5	47.4
	Rated Current	RLA	22.0	23.5	25.0
Airflow and Sound	Airflow	CFM	2,130	4,500	4,500
	Sound Pressure	dB(A)	63.0	62.5	61.2

* Condensing unit above or below the indoor unit

PERFORMANCE

Table 4 — Cassette

	OUTDOOR SIZE		36K	48K	58K
	INDOOR MODEL		**36K**	**48K**	
CASSETTE	Energy Star		NO	NO	
	Cooling System Tons		3.0	4.0	
	Cooling Rated Capacity	Btu/h	36,000	48,000	
	Cooling Cap. Range Min - Max	Btu/h	12,400~36,000	16,600~48,000	
	SEER		18.20	17.80	
	SEER2		19.2	18.5	
	EER		9.00	9.50	
	EER2 (DOE A2 - 95°F)		9.4	9.5	
	EER2 (DOE B2 - 82°F)		11.6	11.6	
	Heating Rated Capacity (47°F)	Btu/h	38,000	50,000	
	Heating Rated Capacity (17°F)	Btu/h	23,000	28,000	
	Heating Maximum Capacity (17°F)	Btu/h	25,300	37,900	
	Heating Maximum Capacity (5°F)	Btu/h	22,300	30,200	
	Heating Capacity Range Min - Max	Btu/h	11,200~38,000	11,850~52,000	
	HSPF		10.6	11.5	
	COP (47°F)	W/W	3.01	3.10	
	COP (17°F)	W/W	1.90	1.80	
	COP (5°F)	W/W	2.02	1.92	

Table 5 — Ducted

	OUTDOOR SIZE		36K	48K	58K
	INDOOR MODEL		**36K**	**48K**	**58K**
DUCTED	Energy Star		NO	NO	NO
	Cooling System Tons		3.0	4.0	4.8
	Cooling Rated Capacity	Btu/h	36,000	48,000	57,000
	Cooling Capacity Range Min - Max	Btu/h	5,900~36,000	12,000~48,000	13,000~59,000
	SEER		16.7	17.4	18.0
	SEER2		15.8	15.1	17
	EER		9.0	9.2	10
	EER2 (DOE A2 - 95°F)		8.8	8.5	10.3
	EER2 (DOE B2 - 82°F)		10.8	10.4	12.3
	Heating Rated Capacity (47°F)	Btu/h	40,000	50,000	60,000
	Heating Rated Capacity (17°F)	Btu/h	27,000	29,000	35,400
	Heating Maximum Capacity (17°F)	Btu/h	25,000	29,000	35,400
	Heating Maximum Capacity (5°F)	Btu/h	22,000	32,000	35,000
	Heating Capacity Range Min - Max	Btu/h	12,700~40,000	11,600~50,000	12,000~61,000
	HSPF		11.5	10.3	10.0
	COP (47°F)	W/W	3.37	3.00	3.50
	COP (17°F)	W/W	2.63	2.57	2.50
	COP (5°F)	W/W	1.90	1.95	2.01

Manufacturer reserves the right to change, at any time, specifications and designs without notice and without obligations.

PERFORMANCE (CONT)

Table 6 — Console

	OUTDOOR SIZE		36K	48K	58K
	INDOOR MODEL		**36K**	**48K**	**58K**
CONSOLE	Energy Star		**NO**	**NO**	**NO**
	Cooling System Tons		3.0	4.0	4.5
	Cooling Rated Capacity	Btu/h	36,000	48,000	54,000
	Cooling Capacity Range Min - Max	Btu/h	11,400~36,000	15,800~48,000	15,000~54,000
	SEER		17	18	18
	SEER2		19	18.9	19.8
	EER		8	9.3	9.8
	EER2 (DOE A2 - 95°F)		8.5	9.3	9.8
	EER2 (DOE B2 - 82°F)		10	11.12	11.8
	Heating Rated Capacity (47°F)	Btu/h	38,000	50,000	60,000
	Heating Rated Capacity (17°F)	Btu/h	23,000	29,000	35,000
	Heating Maximum Capacity (17°F)	Btu/h	23,000	29,000	35,000
	Heating Maximum Capacity (5°F)	Btu/h	22,000	28,000	30,000
	Heating Capacity Range Min - Max	Btu/h	11,400~38,000	12,000~50,000	17,000~62,000
	HSPF		10.0	11.0	10.0
	COP (47°F)	W/W	2.8	2.5	3.0
	COP (17°F)	W/W	2.34	2.52	2.49
	COP (5°F)	W/W	1.80	1.95	1.90

Table 7 — Air Handler

	OUTDOOR SIZE		36K	48K	58K
	INDOOR MODEL		**36K**	**48K**	**58K**
AIR HANDLER	Energy Star		**NO**	**NO**	**NO**
	Cooling System Tons		3.0	4.0	4.8
	Cooling Rated Capacity	Btu/h	36,000	48,000	57,000
	Cooling Capacity Range Min - Max	Btu/h	11,600-41,000	11,800~51,900	11,000~60,000
	SEER		17	16.2	17
	SEER2		15.4	15.3	16
	EER		8.8	8.6	10
	EER2 (DOE A2 - 95°F)		8.2	8.2	9.6
	EER2 (DOE B2 - 82°F)		10	10	11.5
	Heating Rated Capacity (47°F)	Btu/h	38,000	55,000	60,000
	Heating Rated Capacity (17°F)	Btu/h	25,600	37,500	34,000
	Heating Maximum Capacity (17°F)	Btu/h	27,000	37,500	34,600
	Heating Maximum Capacity (5°F)	Btu/h	22,000	31,000	33,000
	Heating Capacity Range Min - Max	Btu/h	9,200-43,000	11,900~58,000	12,000~60,400
	HSPF		11.3	10.8	10.4
	COP (47°F)	W/W	3.35	3.03	3.2
	COP (17°F)	W/W	2.61	2.46	2.52
	COP (5°F)	W/W	1.90	1.75	1.81

Manufacturer reserves the right to change, at any time, specifications and designs without notice and without obligations.

PERFORMANCE (CONT)

Table 8 — FB4CNP060L

	HEAT PUMP SYSTEM		48K	58K
FB4C Fan Coil	INDOOR MODEL		FB4CNP060L	FB4CNP061L
	Indoor Model 2		FB4CNP061L	
	Indoor Model Capacity		48K	58K
	Energy Star		NO	NO
	Cooling System Tons		4.1	4.8
	Cooling Rated Capacity	Btu/h	49,000	58,000
	Cooling Capacity Range Min - Max	Btu/h	12,500~51,000	12,000~60,000
	SEER2		15.5	16.5
	EER2		9.5	10.0
	Heating Rated Capacity (47°F)	Btu/h	41,500	54,000
	Heating Rated Capacity (17°F)	Btu/h	28,400	36,600
	Heating Maximum Capacity (5°F)	Btu/h	26,700	29,300
	Heating Capacity Range Min - Max	Btu/h	12,000~55,000	12,500~57,000
	HSPF2		8.0	8.5
	COP (47°F)	W/W	3.10	3.20
	COP (17°F)	W/W	2.44	2.58
	COP (5°F)	W/W	1.80	1.90

Table 9 — FX4DN(B,F)049L

	HEAT PUMP SYSTEM		48K	58K
FX4D Fan Coil	INDOOR MODEL		FX4DN(B,F)049L	FX4DN(B,F)061L
	Indoor Model Capacity		48K	58K
	Energy Star		NO	NO
	Cooling System Tons		4.3	4.8
	Cooling Rated Capacity	Btu/h	51,000	58,000
	Cooling Cap. Range Min - Max	Btu/h	12,600~51,500	12,300~60,200
	SEER2		16.5	16.5
	EER2		9.5	10.0
	Heating Rated Capacity (47°F)	Btu/h	41,500	54,000
	Heating Rated Capacity (17°F)	Btu/h	28,000	36,600
	Heating Maximum Capacity (5°F)	Btu/h	26,400	34,500
	Heating Cap. Range Min - Max	Btu/h	11,900~53,000	12,300~56,500
	HSPF2		8.0	8.5
	COP (47°F)	W/W	3.40	3.20
	COP (17°F)	W/W	2.60	2.58
	COP (5°F)	W/W	1.90	1.90

Table 10 — FV4CNF005L

	HEAT PUMP SYSTEM		48K	58K
FV4C Fan Coil	INDOOR MODEL		FV4CNF005L	FV4CNF006L
	Indoor Model Capacity		48K	58K
	Energy Star		NO	NO
	Cooling System Tons		4.1	5.0
	Cooling Rated Capacity	Btu/h	49,500	59,500
	Cooling Cap. Range Min - Max	Btu/h	12,400~51,000	12,100~59,600
	SEER2		14.5	14.8
	EER2		9.4	10.0
	Heating Rated Capacity (47°F)	Btu/h	44,000	56,500
	Heating Rated Capacity (17°F)	Btu/h	29,400	38,000
	Heating Maximum Capacity (5°F)	Btu/h	18,900	20,600
	Heating Cap. Range Min - Max	Btu/h	12,100~53,200	12,500~59,000
	HSPF2		8.0	8.4
	COP (47°F)	W/W	3.20	3.25
	COP (17°F)	W/W	2.50	2.55
	COP (5°F)	W/W	1.75	1.55

Manufacturer reserves the right to change, at any time, specifications and designs without notice and without obligations.

PERFORMANCE (CONT)

Table 11 — 58S(B,C)*A

	HEAT PUMP SYSTEM		48K	58K
58S(B,C) Furnace	INDOOR MODEL		58S(B,C)*A	58S(B,C)*A
	Indoor Model Capacity		48K	58K
	Energy Star		NO	NO
	Cooling System Tons		4.2	4.9
	Cooling Rated Capacity	Btu/h	50,000	58,500
	Cooling Cap. Range Min - Max	Btu/h	12,200~51,500	12,000~59,800
	SEER2		15.0	14.5
	EER2		9.0	9.5
	Heating Rated Capacity (47°F)	Btu/h	42,000	55,500
	Heating Rated Capacity (17°F)	Btu/h	28,800	37,600
	Heating Maximum Capacity (5°F)	Btu/h	27,100	35,400
	Heating Cap. Range Min - Max	Btu/h	12,000~52,900	12,300~58,500
	HSPF2		8.0	8.0
	COP (47°F)	W/W	3.20	3.10
	COP (17°F)	W/W	2.42	2.46
	COP (5°F)	W/W	1.80	1.80

Table 12 — 58SU*A

	HEAT PUMP SYSTEM		48K	58K
58SU Furnace	INDOOR MODEL		58SU*A	58SU*A
	Indoor Model Capacity		48K	58K
	Energy Star		NO	NO
	Cooling System Tons		4.1	4.9
	Cooling Rated Capacity	Btu/h	49,500	58,500
	Cooling Cap. Range Min - Max	Btu/h	13,000~54,000	13,500~61,000
	SEER2		15.0	14.5
	EER2		9.0	9.5
	Heating Rated Capacity (47°F)	Btu/h	41,500	55,000
	Heating Rated Capacity (17°F)	Btu/h	28,600	37,600
	Heating Maximum Capacity (5°F)	Btu/h	26,900	35,400
	Heating Cap. Range Min - Max	Btu/h	12,000~53,000	12,200~59,000
	HSPF2		8.0	8.0
	COP (47°F)	W/W	3.10	3.10
	COP (17°F)	W/W	2.44	2.48
	COP (5°F)	W/W	1.80	1.80

Table 13 — 58TP*A

	HEAT PUMP SYSTEM		48K	58K
58TP Furnace	INDOOR MODEL		58TP*A	58TP*A
	Indoor Model Capacity		48K	58K
	Energy Star		NO	NO
	Cooling System Tons		4.2	4.9
	Cooling Rated Capacity	Btu/h	50,000	58,500
	Cooling Cap. Range Min - Max	Btu/h	12,800~52,000	13,200~60,000
	SEER2		14.5	14.3
	EER2		9.0	9.5
	Heating Rated Capacity (47°F)	Btu/h	42,000	55,500
	Heating Rated Capacity (17°F)	Btu/h	28,600	37,800
	Heating Maximum Capacity (5°F)	Btu/h	23,000	30,200
	Heating Cap. Range Min - Max	Btu/h	12,100~53,000	12,300~59,000
	HSPF2		8.0	8.0
	COP (47°F)	W/W	3.20	3.10
	COP (17°F)	W/W	2.44	2.48
	COP (5°F)	W/W	1.80	1.80

Manufacturer reserves the right to change, at any time, specifications and designs without notice and without obligations.

PERFORMANCE (CONT)

Table 14 — 59SC2D*

	HEAT PUMP SYSTEM		48K	58K
59SC2 Furnace	INDOOR MODEL		59SC2D*	59SC2D*
	Indoor Model Capacity		48K	58K
	Energy Star		NO	NO
	Cooling System Tons		2.4	4.8
	Cooling Rated Capacity	Btu/h	28,600	58,000
	Cooling Cap. Range Min - Max	Btu/h	12,900~53,000	13,300~60,100
	SEER2		14.5	14.3
	EER2		9.0	9.5
	Heating Rated Capacity (47°F)	Btu/h	42,000	55,500
	Heating Rated Capacity (17°F)	Btu/h	28,800	37,600
	Heating Maximum Capacity (5°F)	Btu/h	27,100	35,400
	Heating Cap. Range Min - Max	Btu/h	12,100~53,000	12,300~59,000
	HSPF2		8.0	8.0
	COP (47°F)	W/W	3.20	3.10
	COP (17°F)	W/W	2.44	2.48
	COP (5°F)	W/W	1.80	1.80

Table 15 — 59SC5B*

	HEAT PUMP SYSTEM		48K	58K
59SC5 Furnace	INDOOR MODEL		59SC5B*	59SC5B*
	Indoor Model Capacity		48K	58K
	Energy Star		NO	NO
	Cooling System Tons		4.1	4.8
	Cooling Rated Capacity	Btu/h	49,000	58,000
	Cooling Cap. Range Min - Max	Btu/h	12,800~53,200	13,100~60,300
	SEER2		14.5	14.5
	EER2		9.0	9.5
	Heating Rated Capacity (47°F)	Btu/h	41,500	55,000
	Heating Rated Capacity (17°F)	Btu/h	28,600	37,600
	Heating Maximum Capacity (5°F)	Btu/h	26,900	35,400
	Heating Cap. Range Min - Max	Btu/h	12,200~53,000	12,400~59,000
	HSPF2		8.0	8.0
	COP (47°F)	W/W	3.10	3.10
	COP (17°F)	W/W	2.42	2.48
	COP (5°F)	W/W	1.75	1.80

Table 16 — 59SU5A*

	HEAT PUMP SYSTEM		48K	58K
59SU5 Furnace	INDOOR MODEL		59SU5A*	
	Indoor Model Capacity		48K	
	Energy Star		NO	
	Cooling System Tons		4.1	
	Cooling Rated Capacity	Btu/h	49,000	
	Cooling Cap. Range Min - Max	Btu/h	12,600~53,000	
	SEER2		14.5	
	EER2		9.0	
	Heating Rated Capacity (47°F)	Btu/h	41,500	
	Heating Rated Capacity (17°F)	Btu/h	28,600	
	Heating Maximum Capacity (5°F)	Btu/h	26,900	
	Heating Cap. Range Min - Max	Btu/h	12,000~52,600	
	HSPF2		8.00	
	COP (47°F)	W/W	3.10	
	COP (17°F)	W/W	2.42	
	COP (5°F)	W/W	1.75	

Manufacturer reserves the right to change, at any time, specifications and designs without notice and without obligations.

PERFORMANCE (CONT)

Table 17 — 59TP6B1*

	HEAT PUMP SYSTEM		48K	58K
59TP6 Furnace	INDOOR MODEL		59TP6B1*	59TP6B1*
	Indoor Model Capacity		48K	58K
	Energy Star		NO	NO
	Cooling System Tons		4.1	4.9
	Cooling Rated Capacity	Btu/h	49,500	58,500
	Cooling Cap. Range Min - Max	Btu/h	12,800~53,200	13,100~60,300
	SEER2		15.0	14.3
	EER2		9.0	9.5
	Heating Rated Capacity (47°F)	Btu/h	41,000	55,500
	Heating Rated Capacity (17°F)	Btu/h	28,600	37,600
	Heating Maximum Capacity (5°F)	Btu/h	26,900	35,400
	Heating Cap. Range Min - Max	Btu/h	12,200~53,000	12,400~59,000
	HSPF2		8.0	8.0
	COP (47°F)	W/W	3.10	3.10
	COP (17°F)	W/W	2.44	2.48
	COP (5°F)	W/W	1.80	1.80

Manufacturer reserves the right to change, at any time, specifications and designs without notice and without obligations.

DIMENSIONS

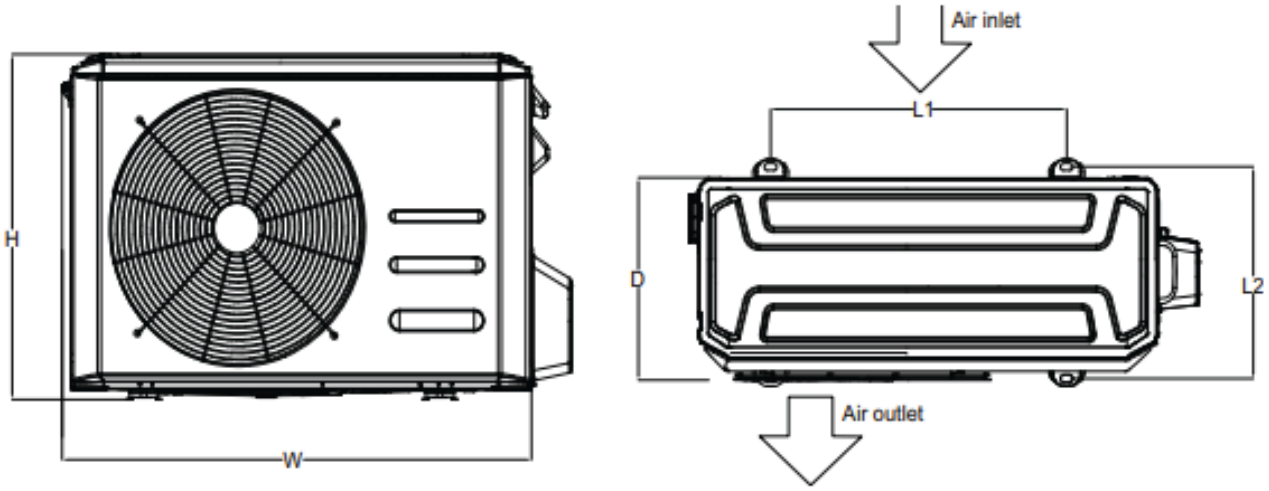

Fig. 3 — Dimensions

Table 18 — Dimensions (Inch/mm)

SIZE		36K	48K	58K
WIDTH (W)	in (mm)	37.24 (946)	37.48 (952)	37.48 (952)
HEIGHT (H)	in (mm)	31.89 (810)	52.48 (1333)	52.48 (1333)
DEPTH (D)	in (mm)	16.14 (410)	16.34 (415)	16.34 (415)
L1	in (mm)	26.50 (673)	24.96 (634)	24.96 (634)
L2	in (mm)	15.85 (403)	15.58 (396)	15.58 (396)
OPERATING WEIGHT	lbs (kg)	148.59 (67.4)	219.14 (99.4)	217.15 (98.5)
SHIPPING WIDTH	in (mm)	42.91 (1090)	43.11 (1095)	43.11 (1095)
SHIPPING HEIGHT	in (mm)	34.45 (875)	58.27 (1480)	58.27 (1480)
SHIPPING DEPTH	in (mm)	19.68 (500)	19.49 (495)	19.49 (495)
SHIPPING WEIGHT	lbs (kg)	160.94 (73)	249.12 (113)	248.24 (112.6)

Manufacturer reserves the right to change, at any time, specifications and designs without notice and without obligations.

DIMENSIONS (CONT)

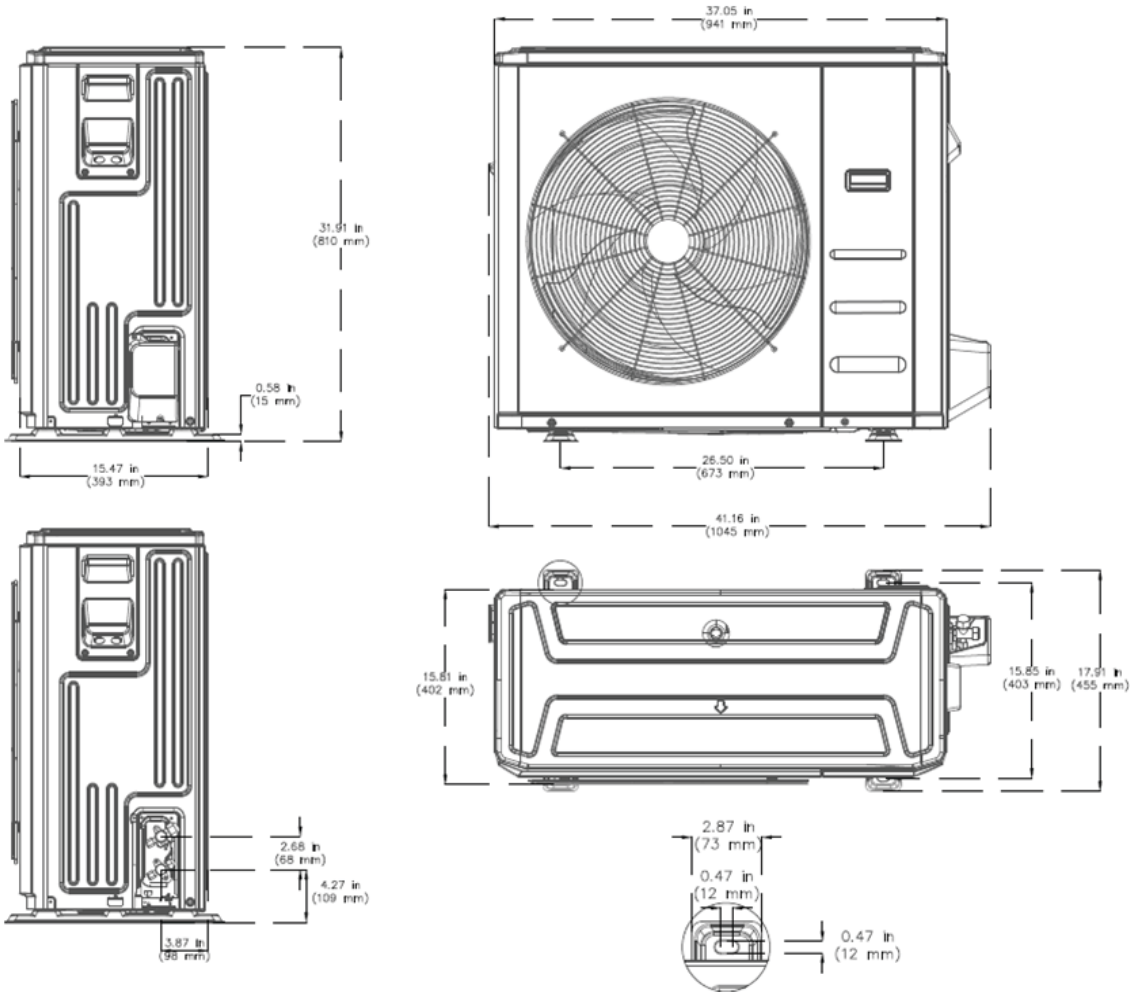

Fig. 4 — Outdoor Dimensions Size 36K

DIMENSIONS (CONT)

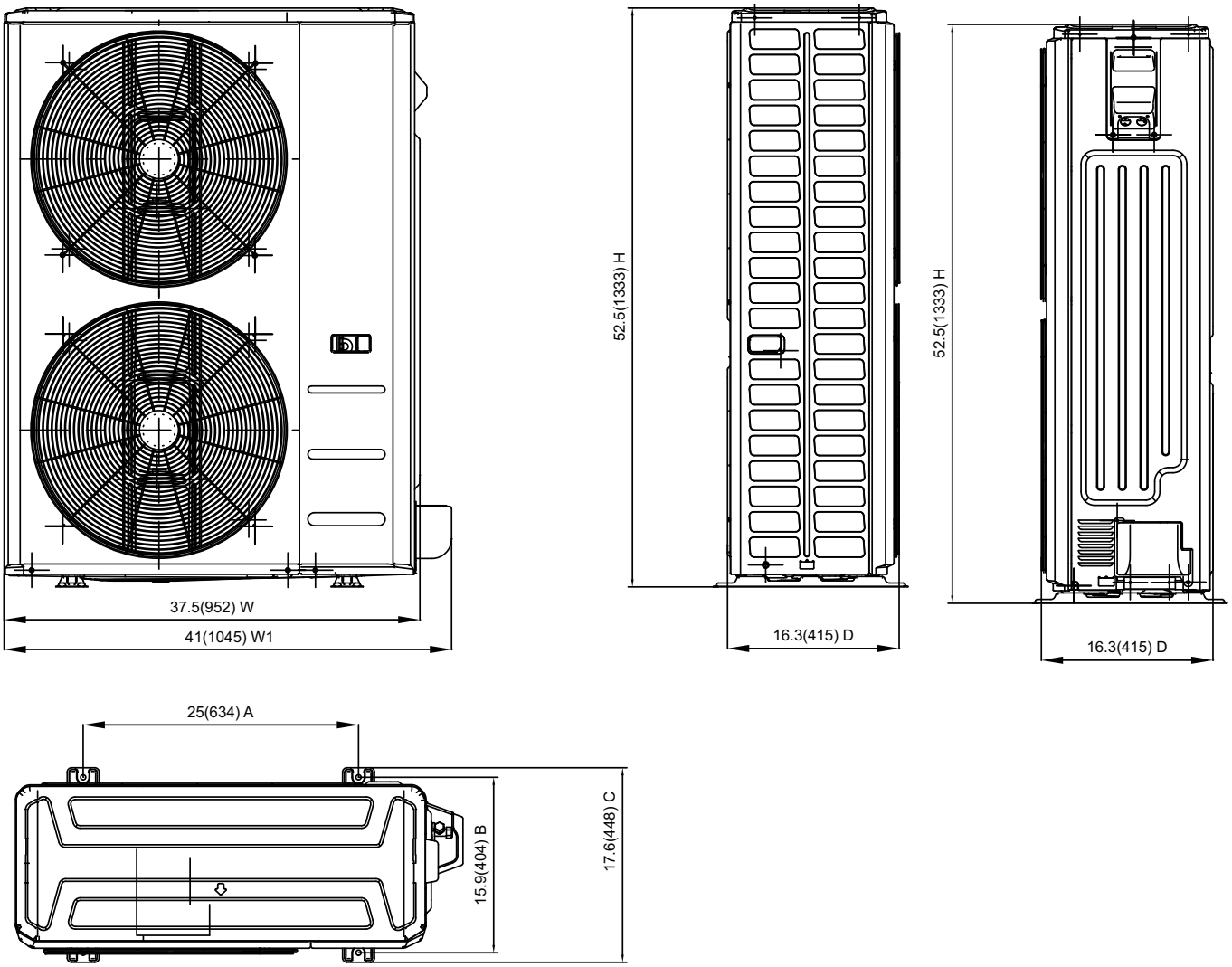

Fig. 5 — Outdoor Dimensions Sizes 48K and 58K

CLEARANCES

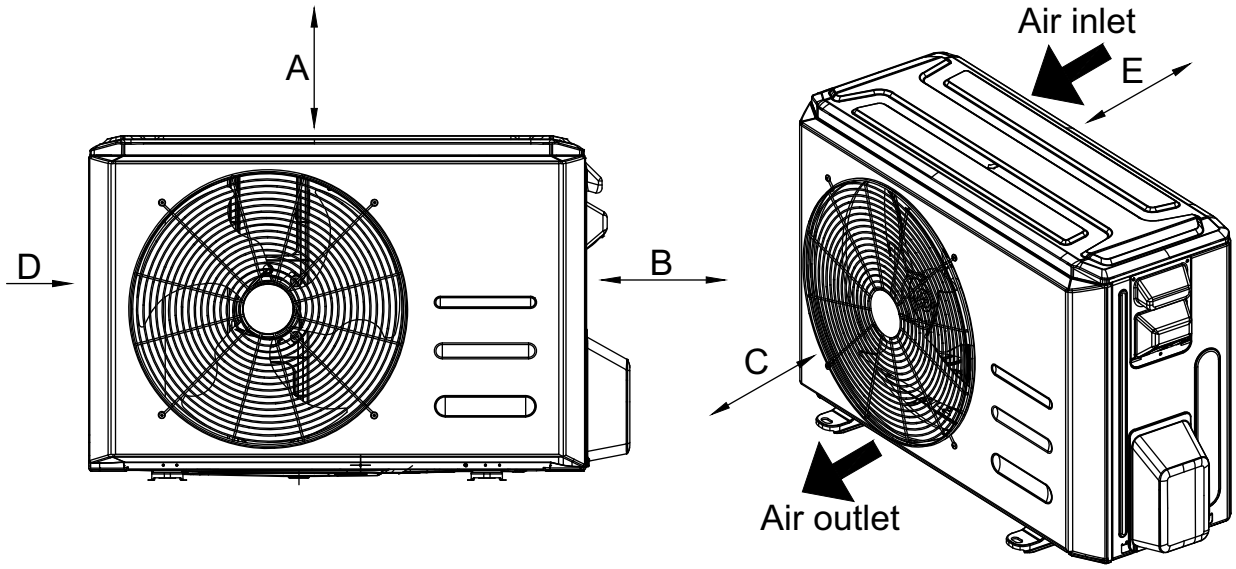

Fig. 6 — Clearances

Table 19 — Clearances

UNIT	MINIMUM VALUE in. (mm)
A	24 (610)
B	24 (610)
C	24 (610)
D	4 (101)
E	4 (101)

NOTE: The outdoor unit must be mounted at least 2in (50mm) above the maximum anticipated snow depth.

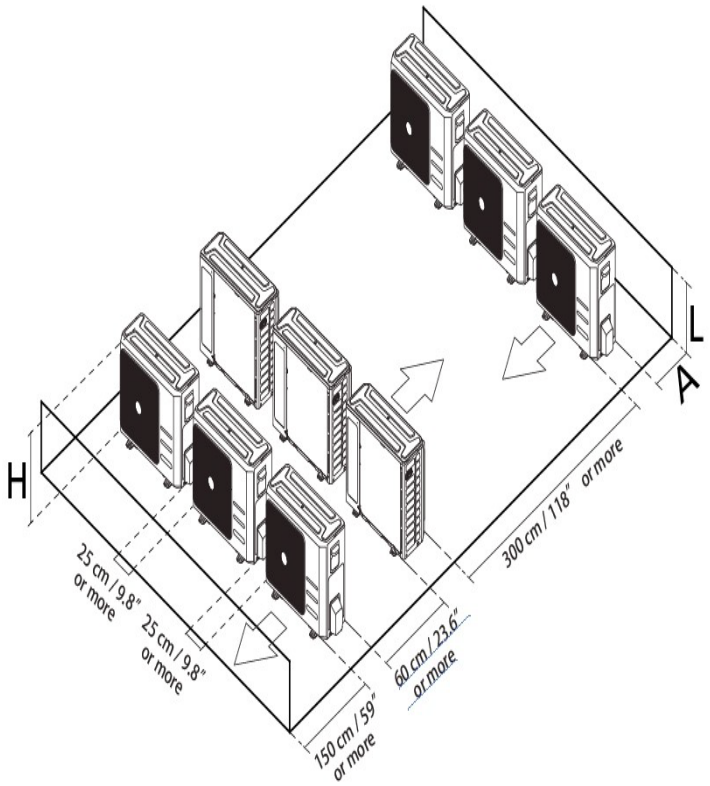

Fig. 7 — Clearances for multiple units

COOLING PERFORMANCE - AHU

COOLING PERFORMANCE AT INDOOR DRY BULB SIZE 36K

COOLING PERFORMANCE AT INDOOR DRY BULB SIZE 36K (Sheet 1 of 3)

AIRFLOW (CFM)	OUTDOOR DB (°F)	ID WB (°F)	60.8				64.4				66.2				71.6			
		ID DB (°F)	73.4	77.0	80.6	84.2	73.4	77.0	80.6	84.2	73.4	77.0	80.6	84.2	73.4	77.0	80.6	84.2
865	-22	TC	38350	38371	38789	39207	40158	41000	41000	41413	41050	41050	41050	41050	43421	43421	43421	43421
		S/T	0.70	0.79	0.87	0.95	0.56	0.64	0.72	0.81	0.49	0.57	0.66	0.73	0.34	0.42	0.49	0.57
		PI	3.52	3.52	3.52	3.52	3.52	3.52	3.52	3.52	3.53	3.53	3.53	3.53	3.55	3.55	3.55	3.55
	-10	TC	38067	38087	38503	38918	39931	40767	40767	41178	40845	40845	40845	40845	43290	43290	43290	43290
		S/T	0.71	0.79	0.88	0.96	0.56	0.65	0.73	0.81	0.50	0.57	0.66	0.74	0.34	0.42	0.50	0.57
		PI	3.18	3.19	3.19	3.18	3.18	3.18	3.18	3.18	3.19	3.19	3.19	3.19	3.20	3.20	3.20	3.20
	0	TC	37831	37851	38264	38676	39741	40573	40573	40982	40674	40674	40674	40674	43181	43181	43181	43181
		S/T	0.71	0.80	0.89	0.96	0.57	0.65	0.73	0.82	0.50	0.58	0.66	0.74	0.35	0.42	0.50	0.58
		PI	2.97	2.97	2.97	2.97	2.96	2.96	2.96	2.96	2.97	2.97	2.97	2.97	2.97	2.97	2.97	2.97
	5	TC	37720	37741	38152	38563	39668	40499	40499	40907	40613	40613	40613	40613	43151	43151	43151	43151
		S/T	0.71	0.80	0.89	0.97	0.57	0.65	0.73	0.82	0.50	0.58	0.67	0.74	0.35	0.42	0.50	0.58
		PI	2.79	2.79	2.79	2.79	2.78	2.78	2.78	2.78	2.78	2.78	2.78	2.78	2.77	2.77	2.77	2.77
	14	TC	37496	37517	37926	38335	39445	40272	40272	40677	40409	40409	40409	40409	43005	43005	43005	43005
		S/T	0.72	0.81	0.89	0.97	0.57	0.66	0.74	0.82	0.50	0.58	0.67	0.75	0.35	0.43	0.50	0.58
		PI	2.78	2.78	2.78	2.78	2.77	2.77	2.77	2.77	2.78	2.78	2.78	2.78	2.77	2.77	2.77	2.77
	23	TC	37273	37293	37700	38106	39297	40120	40120	40524	40261	40261	40261	40261	42896	42896	42896	42896
		S/T	0.72	0.81	0.90	0.98	0.58	0.66	0.74	0.83	0.51	0.59	0.67	0.75	0.35	0.43	0.51	0.59
		PI	2.77	2.78	2.78	2.77	2.77	2.77	2.77	2.77	2.78	2.78	2.78	2.78	2.78	2.78	2.78	2.78
	32	TC	37086	37107	37511	37916	39148	39968	39968	40371	40150	40150	40150	40150	42859	42859	42859	42859
		S/T	0.73	0.81	0.90	0.98	0.58	0.66	0.74	0.83	0.51	0.59	0.68	0.75	0.35	0.43	0.51	0.59
		PI	2.78	2.79	2.79	2.78	2.78	2.78	2.78	2.78	2.79	2.79	2.79	2.79	2.79	2.79	2.79	2.79
	41	TC	36900	36920	37323	37725	38999	39817	39817	40218	40020	40020	40020	40020	42823	42823	42823	42823
		S/T	0.73	0.82	0.91	0.99	0.58	0.66	0.75	0.84	0.51	0.59	0.68	0.76	0.35	0.43	0.51	0.59
		PI	2.81	2.81	2.81	2.81	2.80	2.80	2.80	2.80	2.81	2.81	2.81	2.81	2.81	2.81	2.81	2.81
	50	TC	36676	36696	37096	37496	38814	39627	39627	40026	39854	39854	39854	39854	42713	42713	42713	42713
		S/T	0.73	0.82	0.91	0.99	0.58	0.67	0.75	0.84	0.51	0.59	0.68	0.76	0.36	0.44	0.51	0.59
		PI	2.86	2.86	2.86	2.86	2.85	2.85	2.85	2.85	2.85	2.85	2.85	2.85	2.84	2.84	2.84	2.84
	59	TC	36378	36398	36795	37192	38554	39362	39362	39758	39613	39613	39613	39613	42531	42531	42531	42531
		S/T	0.74	0.83	0.92	1.00	0.59	0.67	0.76	0.85	0.52	0.60	0.69	0.77	0.36	0.44	0.52	0.60
		PI	2.92	2.93	2.93	2.92	2.91	2.91	2.91	2.91	2.92	2.92	2.92	2.92	2.90	2.90	2.90	2.90
	68	TC	35968	35988	36380	36772	38145	38145	38145	38145	39224	39224	39224	39224	42166	42166	42166	42166
		S/T	0.74	0.83	0.92	1.00	0.59	0.68	0.76	0.85	0.52	0.60	0.69	0.77	0.36	0.44	0.52	0.60
		PI	3.03	3.03	3.03	3.03	3.01	3.01	3.01	3.01	3.01	3.01	3.01	3.01	2.99	2.99	2.99	2.99
	77	TC	34321	34321	34713	35105	36478	36478	36478	36478	37557	37557	37557	37557	40401	40401	40401	40401
		S/T	0.75	0.84	0.94	1.00	0.59	0.68	0.78	0.87	0.52	0.61	0.70	0.79	0.35	0.44	0.52	0.60
		PI	3.33	3.33	3.33	3.33	3.33	3.33	3.33	3.33	3.33	3.33	3.33	3.33	3.33	3.33	3.33	3.33
	86	TC	32654	32654	32948	33242	34811	34811	34811	35203	35792	35792	35792	35792	38635	38635	38635	38635
		S/T	0.76	0.86	0.96	1.00	0.60	0.69	0.79	0.88	0.52	0.62	0.71	0.80	0.35	0.44	0.52	0.61
		PI	3.65	3.65	3.65	3.65	3.66	3.66	3.66	3.66	3.67	3.67	3.67	3.67	3.68	3.68	3.68	3.68
	95	TC	31085	31085	31379	31673	33046	33046	33046	33340	34125	34125	34615	34125	36772	36772	36772	36772
		S/T	0.77	0.88	0.98	1.00	0.60	0.70	0.81	0.90	0.53	0.62	0.72	0.82	0.35	0.44	0.53	0.62
		PI	3.99	3.99	3.99	3.99	4.01	4.01	4.01	4.01	4.01	4.01	4.02	4.01	4.04	4.04	4.04	4.04
	104	TC	28980	29112	29403	29695	30878	30878	30878	31169	31858	31858	32123	31858	34392	34392	34392	34392
		S/T	0.80	0.91	1.00	1.00	0.62	0.73	0.84	0.95	0.53	0.64	0.75	0.86	0.34	0.44	0.54	0.64
		PI	4.41	4.41	4.41	4.41	4.42	4.42	4.42	4.42	4.43	4.43	4.43	4.43	4.46	4.46	4.46	4.46
	115	TC	26808	27099	27390	27682	28653	28653	28653	28944	29527	29527	29527	29527	31955	31955	31955	31955
		S/T	0.81	0.93	1.00	1.00	0.62	0.74	0.86	0.97	0.54	0.65	0.76	0.88	0.34	0.44	0.55	0.65
		PI	4.90	4.90	4.90	4.90	4.92	4.92	4.92	4.92	4.93	4.93	4.93	4.93	4.97	4.97	4.97	4.97
	122	TC	25156	25448	25739	26030	26905	26905	26905	27196	27779	27779	27779	28070	30110	30110	30110	30110
		S/T	0.83	0.96	1.00	1.00	0.63	0.76	0.88	1.00	0.54	0.66	0.78	0.90	0.33	0.45	0.56	0.67
		PI	5.30	5.30	5.30	5.30	5.32	5.32	5.32	5.32	5.34	5.34	5.34	5.34	5.38	5.38	5.38	5.38

Manufacturer reserves the right to change, at any time, specifications and designs without notice and without obligations.

COOLING PERFORMANCE AT INDOOR DRY BULB SIZE 36K (Sheet 2 of 3)

AIRFLOW (CFM)	OUTDOOR DB (°F)	ID WB (°F)	60.8				64.4				66.2				71.6			
		ID DB (°F)	73.4	77.0	80.6	84.2	73.4	77.0	80.6	84.2	73.4	77.0	80.6	84.2	73.4	77.0	80.6	84.2
971	-22	TC	39118	39118	39536	39954	41000	41000	41000	41413	41887	41887	41887	41887	44347	44347	44347	44347
		S/T	0.72	0.82	0.97	1.00	0.57	0.66	0.75	0.84	0.49	0.59	0.68	0.77	0.33	0.42	0.50	0.58
		PI	3.52	3.52	3.52	3.52	3.52	3.52	3.52	3.52	3.53	3.53	3.53	3.53	3.55	3.55	3.55	3.55
	-10	TC	38829	38829	39244	39659	40767	40767	40767	41178	41678	41678	41678	41678	44213	44213	44213	44213
		S/T	0.73	0.82	0.97	1.00	0.57	0.66	0.76	0.84	0.50	0.59	0.68	0.78	0.34	0.42	0.51	0.58
		PI	3.18	3.19	3.19	3.18	3.18	3.18	3.18	3.18	3.19	3.19	3.19	3.19	3.20	3.20	3.20	3.20
	0	TC	38588	38588	39001	39413	40573	40573	40573	40982	41503	41503	41503	41503	44101	44101	44101	44101
		S/T	0.73	0.83	0.98	1.00	0.58	0.66	0.76	0.85	0.50	0.60	0.68	0.78	0.34	0.42	0.51	0.59
		PI	3.03	3.03	3.03	3.03	3.02	3.02	3.02	3.02	3.03	3.03	3.03	3.03	3.04	3.04	3.04	3.04
	5	TC	38475	38475	38887	39298	40499	40499	40499	40907	41441	41441	41441	41441	44071	44071	44071	44071
		S/T	0.73	0.83	0.98	1.00	0.58	0.67	0.76	0.85	0.50	0.60	0.69	0.78	0.34	0.42	0.51	0.59
		PI	2.85	2.85	2.85	2.85	2.83	2.83	2.83	2.83	2.84	2.84	2.84	2.84	2.83	2.83	2.83	2.83
	14	TC	38247	38247	38656	39065	40272	40272	40272	40677	41233	41233	41233	41233	43922	43922	43922	43922
		S/T	0.74	0.83	0.99	1.00	0.58	0.67	0.77	0.85	0.50	0.60	0.69	0.79	0.34	0.43	0.51	0.59
		PI	2.83	2.83	2.83	2.83	2.83	2.83	2.83	2.83	2.83	2.83	2.83	2.83	2.83	2.83	2.83	2.83
	23	TC	38019	38019	38425	38832	40120	40120	40120	40524	41082	41082	41082	41082	43810	43810	43810	43810
		S/T	0.74	0.84	0.99	1.00	0.59	0.67	0.77	0.86	0.51	0.60	0.69	0.79	0.34	0.43	0.52	0.59
		PI	2.83	2.83	2.83	2.83	2.82	2.82	2.82	2.82	2.83	2.83	2.83	2.83	2.83	2.83	2.83	2.83
	32	TC	37829	37829	38233	38638	39968	39968	39968	40371	40968	40968	40968	40968	43773	43773	43773	43773
		S/T	0.74	0.84	1.00	1.00	0.59	0.68	0.77	0.86	0.51	0.61	0.70	0.79	0.34	0.43	0.52	0.60
		PI	2.84	2.84	2.84	2.84	2.83	2.83	2.83	2.83	2.84	2.84	2.84	2.84	2.84	2.84	2.84	2.84
	41	TC	37639	37639	38041	38444	39817	39817	39817	40218	40836	40836	40836	40836	43736	43736	43736	43736
		S/T	0.75	0.85	1.00	1.00	0.59	0.68	0.78	0.87	0.51	0.61	0.70	0.80	0.34	0.43	0.52	0.60
		PI	2.87	2.87	2.87	2.87	2.86	2.86	2.86	2.86	2.86	2.86	2.86	2.86	2.86	2.86	2.86	2.86
	50	TC	37411	37411	37811	38211	39627	39627	39627	40026	40666	40666	40666	40666	43624	43624	43624	43624
		S/T	0.75	0.85	1.00	1.00	0.59	0.68	0.78	0.87	0.51	0.61	0.70	0.80	0.35	0.44	0.52	0.60
		PI	2.92	2.92	2.92	2.92	2.90	2.90	2.90	2.90	2.91	2.91	2.91	2.91	2.90	2.90	2.90	2.90
	59	TC	37106	37106	37503	37900	39362	39362	39362	39758	40420	40420	40420	40420	43437	43437	43437	43437
		S/T	0.76	0.86	0.96	1.00	0.60	0.69	0.79	0.88	0.52	0.62	0.71	0.81	0.35	0.44	0.53	0.61
		PI	2.99	2.99	2.99	2.99	2.97	2.97	2.97	2.97	2.97	2.97	2.97	2.97	2.96	2.96	2.96	2.96
	68	TC	36688	36688	37081	37473	38944	38944	38944	39337	40023	40023	40023	40023	43064	43064	43064	43064
		S/T	0.76	0.86	0.96	1.00	0.60	0.69	0.79	0.88	0.52	0.62	0.71	0.81	0.35	0.44	0.53	0.61
		PI	3.09	3.09	3.09	3.09	3.07	3.07	3.07	3.07	3.07	3.07	3.07	3.07	3.05	3.05	3.05	3.05
	77	TC	35021	35021	35413	35805	37179	37179	37179	37571	38258	38258	38258	38258	41201	41201	41201	41201
		S/T	0.77	0.88	0.98	1.00	0.60	0.70	0.81	0.90	0.53	0.62	0.72	0.82	0.35	0.44	0.53	0.62
		PI	3.40	3.40	3.40	3.40	3.40	3.40	3.40	3.40	3.40	3.40	3.40	3.40	3.40	3.40	3.40	3.40
	86	TC	33353	33647	33941	34236	35511	35511	35511	35903	36590	36590	36590	36590	39337	39337	39337	39337
		S/T	0.78	0.89	1.00	1.00	0.61	0.72	0.82	0.92	0.53	0.63	0.73	0.84	0.34	0.44	0.54	0.63
		PI	3.73	3.73	3.73	3.73	3.73	3.73	3.73	3.73	3.74	3.74	3.74	3.74	3.75	3.75	3.75	3.75
	95	TC	31685	31980	32274	32568	33745	33745	33745	34040	34726	34726	35315	34726	37473	37473	37473	37473
		S/T	0.80	0.91	1.00	1.00	0.62	0.73	0.84	0.95	0.53	0.64	0.75	0.86	0.34	0.44	0.54	0.64
		PI	4.07	4.07	4.07	4.07	4.09	4.09	4.09	4.09	4.09	4.09	4.10	4.09	4.09	4.09	4.09	4.09
	104	TC	29865	30160	30454	30748	31837	31837	31970	32265	32773	32773	33094	32907	35431	35431	35431	35431
		S/T	0.83	0.95	1.00	1.00	0.63	0.76	0.88	1.00	0.54	0.66	0.78	0.90	0.34	0.45	0.56	0.67
		PI	4.49	4.49	4.49	4.49	4.51	4.51	4.51	4.51	4.52	4.52	4.52	4.52	4.54	4.54	4.54	4.54
	115	TC	27671	27965	28259	28554	29535	29535	29829	30124	30418	30418	30418	30713	32969	32969	32969	32969
		S/T	0.84	0.97	1.00	1.00	0.64	0.77	0.89	1.00	0.55	0.67	0.80	0.92	0.33	0.45	0.56	0.68
		PI	4.99	4.99	4.99	4.99	5.02	5.02	5.02	5.02	5.03	5.03	5.03	5.03	5.07	5.07	5.07	5.07
	122	TC	25905	26199	26493	26788	27769	27769	28063	28358	28652	28652	28652	28946	31105	31105	31105	31105
		S/T	0.87	1.00	1.00	1.00	0.65	0.79	0.92	1.00	0.55	0.69	0.82	0.94	0.33	0.45	0.57	0.91
		PI	5.41	5.41	5.41	5.41	5.43	5.43	5.43	5.43	5.44	5.44	5.44	5.44	5.49	5.49	5.49	5.49

Manufacturer reserves the right to change, at any time, specifications and designs without notice and without obligations.

COOLING PERFORMANCE AT INDOOR DRY BULB SIZE 36K (Sheet 3 of 3)

AIRFLOW (CFM)	OUTDOOR DB (°F)	ID WB (°F)	60.8				64.4				66.2				71.6			
		ID DB (°F)	73.4	77.0	80.6	84.2	73.4	77.0	80.6	84.2	73.4	77.0	80.6	84.2	73.4	77.0	80.6	84.2
1083	-22	TC	39850	40268	40686	41105	41723	41723	41723	42136	42708	42708	42708	42708	45155	45155	45155	45155
		S/T	0.74	0.85	1.00	1.00	0.58	0.68	0.78	0.96	0.50	0.60	0.69	0.80	0.32	0.42	0.51	0.60
		PI	3.52	3.52	3.52	3.52	3.52	3.52	3.52	3.52	3.53	3.53	3.53	3.53	3.55	3.55	3.55	3.55
	-10	TC	39555	39971	40386	40801	41486	41486	41486	41897	42495	42495	42495	42495	45019	45019	45019	45019
		S/T	0.75	0.85	1.00	1.00	0.58	0.68	0.79	0.97	0.51	0.60	0.70	0.80	0.33	0.42	0.52	0.60
		PI	3.18	3.19	3.19	3.18	3.18	3.18	3.18	3.18	3.19	3.19	3.19	3.19	3.20	3.20	3.20	3.20
	0	TC	39310	39723	40135	40548	41289	41289	41289	41697	42317	42317	42317	42317	44905	44905	44905	44905
		S/T	0.75	0.86	1.00	1.00	0.59	0.68	0.79	0.97	0.51	0.61	0.70	0.81	0.33	0.42	0.52	0.61
		PI	3.09	3.09	3.09	3.09	3.08	3.08	3.08	3.08	3.09	3.09	3.09	3.09	3.09	3.09	3.09	3.09
	5	TC	39195	39607	40018	40430	41213	41213	41213	41621	42253	42253	42253	42253	44874	44874	44874	44874
		S/T	0.75	0.86	1.00	1.00	0.59	0.69	0.79	0.98	0.51	0.61	0.70	0.81	0.33	0.42	0.52	0.61
		PI	2.90	2.90	2.90	2.90	2.89	2.89	2.89	2.89	2.89	2.89	2.89	2.89	2.88	2.88	2.88	2.88
	14	TC	38963	39372	39781	40190	40982	40982	40982	41387	42041	42041	42041	42041	44722	44722	44722	44722
		S/T	0.76	0.86	1.00	1.00	0.59	0.69	0.80	0.98	0.51	0.61	0.71	0.82	0.33	0.43	0.52	0.61
		PI	2.89	2.89	2.89	2.89	2.88	2.88	2.88	2.88	2.88	2.88	2.88	2.88	2.88	2.88	2.88	2.88
	23	TC	38730	39137	39544	39950	40827	40827	40827	41232	41887	41887	41887	41887	44609	44609	44609	44609
		S/T	0.76	0.87	1.00	1.00	0.59	0.69	0.80	0.99	0.52	0.61	0.71	0.82	0.33	0.43	0.53	0.61
		PI	2.88	2.88	2.88	2.88	2.88	2.88	2.88	2.88	2.88	2.88	2.88	2.88	2.89	2.89	2.89	2.89
	32	TC	38537	38941	39346	39751	40673	40673	40673	41076	41772	41772	41772	41772	44571	44571	44571	44571
		S/T	0.76	0.87	1.00	1.00	0.60	0.70	0.80	0.99	0.52	0.62	0.72	0.82	0.33	0.43	0.53	0.62
		PI	2.90	2.90	2.90	2.90	2.89	2.89	2.89	2.89	2.90	2.90	2.90	2.90	2.90	2.90	2.90	2.90
	41	TC	38343	38746	39148	39551	40519	40519	40519	40920	41637	41637	41637	41637	44533	44533	44533	44533
		S/T	0.77	0.88	1.00	1.00	0.60	0.70	0.81	1.00	0.52	0.62	0.72	0.83	0.33	0.43	0.53	0.62
		PI	2.92	2.92	2.92	2.92	2.91	2.91	2.91	2.91	2.92	2.92	2.92	2.92	2.92	2.92	2.92	2.92
	50	TC	38111	38511	38911	39311	40326	40326	40326	40725	41463	41463	41463	41463	44419	44419	44419	44419
		S/T	0.77	0.88	1.00	1.00	0.60	0.70	0.81	1.00	0.52	0.62	0.72	0.83	0.34	0.44	0.53	0.62
		PI	2.97	2.97	2.97	2.97	2.96	2.96	2.96	2.96	2.96	2.96	2.96	2.96	2.96	2.96	2.96	2.96
	59	TC	37801	38198	38595	38991	40056	40056	40056	40452	41213	41213	41213	41213	44229	44229	44229	44229
		S/T	0.78	0.89	1.00	1.00	0.61	0.71	0.82	0.92	0.53	0.63	0.73	0.84	0.34	0.44	0.54	0.63
		PI	3.04	3.04	3.04	3.04	3.03	3.03	3.03	3.03	3.03	3.03	3.03	3.03	3.02	3.02	3.02	3.02
	68	TC	37375	37767	38160	38552	39631	39631	39631	40023	40808	40808	40808	40808	43849	43849	43849	43849
		S/T	0.78	0.89	1.00	1.00	0.61	0.71	0.82	0.92	0.53	0.63	0.73	0.84	0.34	0.44	0.54	0.63
		PI	3.15	3.15	3.15	3.15	3.13	3.13	3.13	3.13	3.13	3.13	3.13	3.13	3.11	3.11	3.11	3.11
	77	TC	35707	36100	36492	36884	37865	37865	37865	38258	39042	39042	39042	39042	41985	41985	41985	41985
		S/T	0.79	0.91	1.00	1.00	0.62	0.73	0.84	0.94	0.53	0.64	0.75	0.86	0.34	0.44	0.54	0.64
		PI	3.46	3.46	3.46	3.46	3.46	3.46	3.46	3.46	3.46	3.46	3.46	3.46	3.46	3.46	3.46	3.46
	86	TC	34040	34334	34726	35119	36198	36198	36198	36590	37277	37277	37277	37277	40122	40122	40122	40122
		S/T	0.81	0.93	1.00	1.00	0.62	0.74	0.86	0.97	0.54	0.65	0.76	0.88	0.34	0.44	0.55	0.65
		PI	3.80	3.80	3.80	3.80	3.81	3.81	3.81	3.81	3.81	3.81	3.81	3.81	3.83	3.83	3.83	3.83
	95	TC	32274	32568	32862	33157	34334	34334	34334	34726	35413	35413	36001	36394	38258	38258	38258	38258
		S/T	0.83	0.95	1.00	1.00	0.63	0.75	0.88	0.99	0.54	0.66	0.77	0.89	0.34	0.45	0.56	0.67
		PI	4.15	4.15	4.15	4.15	4.17	4.17	4.17	4.17	4.17	4.17	4.18	4.17	4.20	4.20	4.20	4.20
	104	TC	30409	30704	30998	31292	32381	32381	32514	32862	33415	33415	33737	34084	36172	36172	36172	36172
		S/T	0.86	1.00	1.00	1.00	0.65	0.78	0.91	1.00	0.55	0.68	0.81	0.94	0.33	0.45	0.57	0.90
		PI	4.58	4.58	4.58	4.58	4.60	4.60	4.60	4.60	4.61	4.61	4.61	4.61	4.64	4.64	4.64	4.64
	115	TC	28161	28456	28750	29044	30026	30026	30320	30614	31007	31007	31007	31301	33656	33656	33656	33656
		S/T	0.88	1.00	1.00	1.00	0.66	0.80	0.93	1.00	0.56	0.69	0.83	0.96	0.33	0.45	0.58	0.92
		PI	5.09	5.09	5.09	5.09	5.12	5.12	5.12	5.12	5.13	5.13	5.13	5.13	5.17	5.17	5.17	5.17
	122	TC	26395	26690	26984	27278	28259	28259	28554	28848	29241	29241	29241	29535	31694	31694	31694	31694
		S/T	0.91	1.00	1.00	1.00	0.67	0.82	0.97	1.00	0.57	0.71	0.85	0.99	0.32	0.46	0.59	0.97
		PI	5.51	5.51	5.51	5.51	5.54	5.54	5.54	5.54	5.55	5.55	5.55	5.55	5.60	5.60	5.60	5.60

NOTE: Data highlighted in gray is extrapolated data and not actual test data. At 77°F outdoor conditions sweat protection activates causing a decrease in total capacity.

LEGEND:
TC: Total Cooling Capacity (BTU/hr)
S/T: Sensible Cooling Capacity Ratio
PI: Power Input (kW)
Extrapolated Data

PERFORMANCE

COOLING PERFORMANCE AT INDOOR DRY BULB SIZE 48K

COOLING PERFORMANCE AT INDOOR DRY BULB TEMPERATURE SIZE 48K (Sheet 1 of 3)

AIRFLOW (CFM)	OUTDOOR DB (°F)	ID WB (°F)	60.8				64.4				66.2				71.6			
		ID DB (°F)	73.4	77.0	80.6	84.2	73.4	77.0	80.6	84.2	73.4	77.0	80.6	84.2	73.4	77.0	80.6	84.2
906	-22	TC	50991	50950	50950	51472	53400	54558	54558	54558	54621	54621	54621	54621	57780	57780	57780	57780
		S/T	0.67	0.73	0.80	0.87	0.54	0.61	0.68	0.74	0.48	0.55	0.62	0.68	0.36	0.42	0.48	0.53
		PI	4.68	4.69	4.69	4.68	4.70	4.70	4.70	4.70	4.71	4.71	4.70	4.71	4.74	4.74	4.74	4.74
	-10	TC	50615	50573	50573	51091	53097	54248	54248	54248	54349	54349	54349	54349	57605	57605	57605	57605
		S/T	0.67	0.74	0.80	0.87	0.55	0.61	0.68	0.75	0.49	0.56	0.62	0.68	0.36	0.42	0.48	0.54
		PI	4.24	4.24	4.24	4.24	4.24	4.24	4.24	4.24	4.25	4.25	4.25	4.25	4.27	4.27	4.27	4.27
	0	TC	50301	50260	50260	50775	52844	53990	53990	53990	54121	54121	54121	54121	57459	57459	57459	57459
		S/T	0.67	0.74	0.81	0.88	0.55	0.62	0.68	0.75	0.49	0.56	0.63	0.68	0.37	0.42	0.48	0.54
		PI	3.96	3.96	3.96	3.96	3.96	3.96	3.96	3.96	3.96	3.96	3.96	3.96	3.97	3.97	3.97	3.97
	5	TC	50154	50113	50113	50626	52748	53891	53891	53891	54040	54040	54040	54040	57420	57420	57420	57420
		S/T	0.68	0.74	0.81	0.88	0.55	0.62	0.69	0.75	0.49	0.56	0.63	0.69	0.37	0.42	0.48	0.54
		PI	3.72	3.72	3.72	3.72	3.71	3.71	3.71	3.71	3.70	3.70	3.70	3.70	3.69	3.69	3.69	3.69
	14	TC	49856	49816	49816	50326	52452	53589	53589	53589	53769	53769	53769	53769	57226	57226	57226	57226
		S/T	0.68	0.75	0.82	0.88	0.55	0.62	0.69	0.76	0.49	0.56	0.63	0.69	0.37	0.43	0.49	0.54
		PI	3.70	3.70	3.70	3.70	3.70	3.70	3.70	3.70	3.70	3.70	3.70	3.70	3.70	3.70	3.70	3.70
	23	TC	49559	49518	49518	50026	52254	53387	53387	53387	53572	53572	53572	53572	57080	57080	57080	57080
		S/T	0.68	0.75	0.82	0.89	0.56	0.62	0.69	0.76	0.50	0.57	0.63	0.69	0.37	0.43	0.49	0.55
		PI	3.70	3.70	3.70	3.70	3.69	3.69	3.69	3.69	3.70	3.70	3.70	3.70	3.70	3.70	3.70	3.70
	32	TC	49311	49271	49271	49776	52056	53185	53185	53185	53424	53424	53424	53424	57032	57032	57032	57032
		S/T	0.69	0.75	0.82	0.89	0.56	0.63	0.70	0.76	0.50	0.57	0.64	0.70	0.37	0.43	0.49	0.55
		PI	3.71	3.71	3.71	3.71	3.71	3.71	3.71	3.71	3.71	3.71	3.71	3.71	3.72	3.72	3.72	3.72
	41	TC	49063	49023	49023	49526	51859	52983	52983	52983	53251	53251	53251	53251	56983	56983	56983	56983
		S/T	0.69	0.76	0.83	0.90	0.56	0.63	0.70	0.77	0.50	0.57	0.64	0.70	0.37	0.43	0.49	0.55
		PI	3.74	3.75	3.75	3.74	3.74	3.74	3.74	3.74	3.74	3.74	3.74	3.74	3.74	3.74	3.74	3.74
	50	TC	48766	48726	48726	49225	51612	52731	52731	52731	53030	53030	53030	53030	56837	56837	56837	56837
		S/T	0.69	0.76	0.83	0.90	0.56	0.63	0.70	0.77	0.50	0.57	0.64	0.70	0.38	0.44	0.50	0.55
		PI	3.81	3.81	3.81	3.81	3.80	3.80	3.80	3.80	3.80	3.80	3.80	3.80	3.79	3.79	3.79	3.79
	59	TC	48370	48330	48330	48825	51266	52378	52378	52378	52709	52709	52709	52709	56594	56594	56594	56594
		S/T	0.70	0.77	0.84	0.91	0.57	0.64	0.71	0.78	0.51	0.58	0.65	0.71	0.38	0.44	0.50	0.56
		PI	3.90	3.90	3.90	3.90	3.89	3.89	3.89	3.89	3.88	3.88	3.88	3.88	3.87	3.87	3.87	3.87
	68	TC	47824	47785	47785	48275	50723	50723	50723	50723	52192	52192	52192	52192	56109	56109	56109	56109
		S/T	0.70	0.77	0.84	0.91	0.57	0.64	0.71	0.78	0.51	0.58	0.65	0.71	0.38	0.44	0.50	0.56
		PI	4.04	4.04	4.04	4.04	4.02	4.02	4.02	4.02	4.01	4.01	4.01	4.01	3.99	3.99	3.99	3.99
	77	TC	45631	45631	45631	46121	48471	48471	48471	48471	49940	49940	49940	49940	53661	53661	53661	53661
		S/T	0.70	0.78	0.86	0.93	0.57	0.65	0.72	0.79	0.51	0.58	0.65	0.72	0.37	0.44	0.50	0.57
		PI	4.45	4.45	4.45	4.45	4.44	4.44	4.44	4.44	4.44	4.44	4.44	4.44	4.45	4.45	4.45	4.45
	86	TC	43477	43477	43477	43868	46219	46219	46219	46219	47589	47589	47589	47589	51310	51310	51310	51310
		S/T	0.71	0.79	0.87	0.95	0.58	0.65	0.73	0.80	0.51	0.59	0.66	0.73	0.37	0.44	0.51	0.57
		PI	4.87	4.87	4.87	4.87	4.88	4.88	4.88	4.88	4.88	4.88	4.88	4.88	4.90	4.90	4.90	4.90
	95	TC	41323	41323	41714	42106	43966	43966	43966	43966	45337	45337	46023	45337	48862	48862	48862	48862
		S/T	0.72	0.80	0.88	0.97	0.58	0.66	0.74	0.82	0.51	0.59	0.67	0.75	0.36	0.44	0.51	0.58
		PI	5.32	5.32	5.32	5.32	5.34	5.34	5.34	5.34	5.35	5.35	5.36	5.35	5.39	5.39	5.39	5.39
	104	TC	38883	38883	39274	39666	41391	41391	41391	41391	42716	42716	43090	42716	46149	46149	46149	46149
		S/T	0.74	0.83	0.92	1.00	0.59	0.67	0.76	0.85	0.52	0.60	0.69	0.77	0.36	0.44	0.51	0.59
		PI	5.87	5.87	5.87	5.87	5.90	5.90	5.90	5.90	5.90	5.90	5.91	5.90	5.95	5.95	5.95	5.95
	115	TC	36001	36001	36393	36784	38349	38349	38349	38349	39621	39621	39621	39621	42947	42947	42947	42947
		S/T	0.74	0.84	0.94	1.00	0.59	0.68	0.77	0.87	0.52	0.61	0.70	0.78	0.35	0.44	0.52	0.60
		PI	6.53	6.53	6.53	6.53	6.56	6.56	6.56	6.56	6.57	6.57	6.57	6.57	6.63	6.63	6.63	6.63
	122	TC	33751	33751	34045	34338	36099	36099	36099	36491	37273	37273	37273	37273	40404	40404	40404	40404
		S/T	0.76	0.86	0.96	1.00	0.60	0.69	0.79	0.89	0.52	0.62	0.71	0.81	0.35	0.44	0.52	0.61
		PI	7.07	7.07	7.07	7.07	7.10	7.10	7.10	7.10	7.12	7.12	7.12	7.12	7.18	7.18	7.18	7.18

Manufacturer reserves the right to change, at any time, specifications and designs without notice and without obligations.

COOLING PERFORMANCE AT INDOOR DRY BULB TEMPERATURE SIZE 48K (Sheet 2 of 3)

AIRFLOW (CFM)	OUTDOOR DB (°F)	ID WB (°F)	60.8				64.4				66.2				71.6			
		ID DB (°F)	73.4	77.0	80.6	84.2	73.4	77.0	80.6	84.2	73.4	77.0	80.6	84.2	73.4	77.0	80.6	84.2
1095	-22	TC	52121	52121	52643	53165	54558	54558	54558	54558	55773	55773	55773	55773	59015	59015	59015	59015
		S/T	0.68	0.77	0.97	1.00	0.55	0.63	0.70	0.79	0.48	0.56	0.64	0.71	0.34	0.42	0.48	0.55
		PI	4.68	4.69	4.69	4.68	4.70	4.70	4.70	4.70	4.71	4.71	4.70	4.71	4.74	4.74	4.74	4.74
	-10	TC	51736	51736	52254	52772	54248	54248	54248	54248	55494	55494	55494	55494	58837	58837	58837	58837
		S/T	0.69	0.78	0.97	1.00	0.56	0.63	0.71	0.79	0.49	0.56	0.64	0.72	0.34	0.42	0.49	0.56
		PI	4.24	4.24	4.24	4.24	4.24	4.24	4.24	4.24	4.25	4.25	4.25	4.25	4.27	4.27	4.27	4.27
	0	TC	51415	51415	51930	52445	53990	53990	53990	53990	55262	55262	55262	55262	58688	58688	58688	58688
		S/T	0.69	0.78	0.98	1.00	0.56	0.64	0.71	0.80	0.49	0.57	0.65	0.72	0.35	0.42	0.49	0.56
		PI	4.04	4.04	4.04	4.04	4.04	4.04	4.04	4.04	4.04	4.04	4.04	4.04	4.06	4.06	4.06	4.06
	5	TC	51265	51265	51778	52292	53891	53891	53891	53891	55179	55179	55179	55179	58648	58648	58648	58648
		S/T	0.70	0.78	0.98	1.00	0.56	0.64	0.71	0.80	0.49	0.57	0.65	0.72	0.35	0.42	0.49	0.56
		PI	3.80	3.80	3.80	3.80	3.78	3.78	3.78	3.78	3.78	3.78	3.78	3.78	3.78	3.78	3.78	3.78
	14	TC	50961	50961	51471	51982	53589	53589	53589	53589	54902	54902	54902	54902	58450	58450	58450	58450
		S/T	0.70	0.79	0.99	1.00	0.56	0.64	0.72	0.81	0.49	0.57	0.65	0.73	0.35	0.43	0.49	0.56
		PI	3.78	3.78	3.78	3.78	3.77	3.77	3.77	3.77	3.77	3.77	3.77	3.77	3.78	3.78	3.78	3.78
	23	TC	50657	50657	51164	51672	53387	53387	53387	53387	54701	54701	54701	54701	58301	58301	58301	58301
		S/T	0.70	0.79	0.99	1.00	0.57	0.64	0.72	0.81	0.50	0.58	0.65	0.73	0.35	0.43	0.50	0.57
		PI	3.77	3.77	3.77	3.77	3.77	3.77	3.77	3.77	3.77	3.77	3.77	3.77	3.79	3.79	3.79	3.79
	32	TC	50403	50403	50908	51413	53185	53185	53185	53185	54550	54550	54550	54550	58251	58251	58251	58251
		S/T	0.71	0.79	1.00	1.00	0.57	0.65	0.73	0.81	0.50	0.58	0.66	0.74	0.35	0.43	0.50	0.57
		PI	3.79	3.79	3.79	3.79	3.78	3.78	3.78	3.78	3.78	3.78	3.78	3.78	3.80	3.80	3.80	3.80
	41	TC	50150	50150	50653	51155	52983	52983	52983	52983	54374	54374	54374	54374	58202	58202	58202	58202
		S/T	0.71	0.80	1.00	1.00	0.57	0.65	0.73	0.82	0.50	0.58	0.66	0.74	0.35	0.43	0.50	0.57
		PI	3.82	3.82	3.82	3.82	3.82	3.82	3.82	3.82	3.81	3.81	3.81	3.81	3.83	3.83	3.83	3.83
	50	TC	49846	49846	50346	50845	52731	52731	52731	52731	54148	54148	54148	54148	58053	58053	58053	58053
		S/T	0.71	0.80	1.00	1.00	0.57	0.65	0.73	0.82	0.50	0.58	0.66	0.74	0.36	0.44	0.50	0.57
		PI	3.89	3.89	3.89	3.89	3.87	3.87	3.87	3.87	3.87	3.87	3.87	3.87	3.88	3.88	3.88	3.88
	59	TC	49441	49441	49936	50432	52378	52378	52378	52378	53820	53820	53820	53820	57805	57805	57805	57805
		S/T	0.72	0.81	0.89	0.97	0.58	0.66	0.74	0.83	0.51	0.59	0.67	0.75	0.36	0.44	0.51	0.58
		PI	3.98	3.98	3.98	3.98	3.96	3.96	3.96	3.96	3.96	3.96	3.96	3.96	3.96	3.96	3.96	3.96
	68	TC	48884	48884	49373	49863	51823	51823	51823	51823	53292	53292	53292	53292	57309	57309	57309	57309
		S/T	0.72	0.81	0.89	0.97	0.58	0.66	0.74	0.83	0.51	0.59	0.67	0.75	0.36	0.44	0.51	0.58
		PI	4.12	4.12	4.12	4.12	4.10	4.10	4.10	4.10	4.09	4.09	4.09	4.09	4.08	4.08	4.08	4.08
	77	TC	46631	46631	47120	47610	49471	49471	49471	49471	50941	50941	50941	50941	54859	54859	54859	54859
		S/T	0.73	0.82	0.91	0.99	0.58	0.67	0.76	0.84	0.52	0.60	0.68	0.77	0.36	0.44	0.51	0.59
		PI	4.54	4.54	4.54	4.54	4.53	4.53	4.53	4.53	4.53	4.53	4.53	4.53	4.54	4.54	4.54	4.54
	86	TC	44377	44377	44867	45357	47218	47218	47218	47218	48688	48688	48688	48688	52410	52410	52410	52410
		S/T	0.74	0.84	0.93	1.00	0.59	0.68	0.77	0.86	0.52	0.61	0.69	0.78	0.36	0.44	0.52	0.60
		PI	4.97	4.97	4.97	4.97	4.98	4.98	4.98	4.98	4.98	4.98	4.98	4.98	5.00	5.00	5.00	5.00
	95	TC	42222	42222	42614	43006	44867	44867	44867	44867	46337	46337	47022	46337	49961	49961	49961	49961
		S/T	0.75	0.85	0.95	1.00	0.59	0.69	0.78	0.88	0.52	0.61	0.70	0.80	0.35	0.44	0.52	0.61
		PI	5.43	5.43	5.43	5.43	5.45	5.45	5.45	5.45	5.46	5.46	5.47	5.46	5.46	5.46	5.46	5.46
	104	TC	39414	39591	39979	40368	41994	41994	41994	42170	43363	43363	43734	43363	46827	46827	46827	46827
		S/T	0.78	0.88	0.99	1.00	0.61	0.71	0.81	0.91	0.53	0.63	0.73	0.83	0.35	0.44	0.53	0.63
		PI	6.00	6.00	6.00	6.00	6.02	6.02	6.02	6.02	6.04	6.04	6.04	6.04	6.06	6.06	6.06	6.06
	115	TC	36445	36834	37223	37611	38972	38972	38972	39361	40235	40235	40235	40235	43540	43540	43540	43540
		S/T	0.79	0.90	1.00	1.00	0.61	0.72	0.83	0.93	0.53	0.63	0.74	0.84	0.34	0.44	0.54	0.63
		PI	6.67	6.67	6.67	6.67	6.70	6.70	6.70	6.70	6.72	6.72	6.72	6.72	6.78	6.78	6.78	6.78
	122	TC	34210	34599	34987	35376	36640	36640	36640	37028	37806	37806	37806	37806	41013	41013	41013	41013
		S/T	0.81	0.93	1.00	1.00	0.62	0.74	0.85	0.96	0.54	0.65	0.76	0.87	0.34	0.44	0.55	0.91
		PI	7.22	7.22	7.22	7.22	7.26	7.26	7.26	7.26	7.28	7.28	7.28	7.28	7.33	7.33	7.33	7.33

Manufacturer reserves the right to change, at any time, specifications and designs without notice and without obligations.

COOLING PERFORMANCE AT INDOOR DRY BULB TEMPERATURE SIZE 48K (Sheet 3 of 3)

AIRFLOW (CFM)	OUTDOOR DB (°F)	ID WB (°F)	60.8				64.4				66.2				71.6			
		ID DB (°F)	73.4	77.0	80.6	84.2	73.4	77.0	80.6	84.2	73.4	77.0	80.6	84.2	73.4	77.0	80.6	84.2
1283	-22	TC	53165	53165	53687	54210	55692	55692	55692	55692	57003	57003	57003	57003	60226	60226	60226	60226
		S/T	0.71	0.81	1.00	1.00	0.56	0.66	0.74	0.96	0.49	0.58	0.67	0.75	0.33	0.42	0.49	0.58
		PI	4.68	4.69	4.69	4.68	4.70	4.70	4.70	4.70	4.71	4.71	4.70	4.71	4.74	4.74	4.74	4.74
	-10	TC	52772	52772	53291	53809	55376	55376	55376	55376	56719	56719	56719	56719	60044	60044	60044	60044
		S/T	0.72	0.81	1.00	1.00	0.56	0.66	0.75	0.97	0.50	0.58	0.67	0.76	0.34	0.42	0.50	0.58
		PI	4.24	4.24	4.24	4.24	4.24	4.24	4.24	4.24	4.25	4.25	4.25	4.25	4.27	4.27	4.27	4.27
	0	TC	52445	52445	52960	53476	55113	55113	55113	55113	56481	56481	56481	56481	59892	59892	59892	59892
		S/T	0.72	0.82	1.00	1.00	0.57	0.66	0.75	0.97	0.50	0.59	0.67	0.76	0.34	0.42	0.50	0.59
		PI	4.12	4.12	4.12	4.12	4.11	4.11	4.11	4.11	4.13	4.13	4.12	4.13	4.14	4.14	4.14	4.14
	5	TC	52292	52292	52806	53319	55012	55012	55012	55012	56396	56396	56396	56396	59851	59851	59851	59851
		S/T	0.72	0.82	1.00	1.00	0.57	0.67	0.75	0.98	0.50	0.59	0.68	0.76	0.34	0.42	0.50	0.59
		PI	3.87	3.87	3.87	3.87	3.85	3.85	3.85	3.85	3.86	3.86	3.86	3.86	3.85	3.85	3.85	3.85
	14	TC	51982	51982	52492	53003	54703	54703	54703	54703	56113	56113	56113	56113	59649	59649	59649	59649
		S/T	0.73	0.82	1.00	1.00	0.57	0.67	0.76	0.98	0.50	0.59	0.68	0.77	0.34	0.43	0.50	0.59
		PI	3.85	3.85	3.85	3.85	3.84	3.84	3.84	3.84	3.85	3.85	3.85	3.85	3.86	3.86	3.86	3.86
	23	TC	51672	51672	52179	52687	54497	54497	54497	54497	55908	55908	55908	55908	59497	59497	59497	59497
		S/T	0.73	0.83	1.00	1.00	0.58	0.67	0.76	0.99	0.51	0.59	0.68	0.77	0.34	0.43	0.51	0.59
		PI	3.84	3.84	3.84	3.84	3.84	3.84	3.84	3.84	3.85	3.85	3.85	3.85	3.86	3.86	3.86	3.86
	32	TC	51413	51413	51918	52424	54291	54291	54291	54291	55753	55753	55753	55753	59446	59446	59446	59446
		S/T	0.74	0.83	1.00	1.00	0.58	0.68	0.76	0.99	0.51	0.60	0.69	0.77	0.34	0.43	0.51	0.60
		PI	3.86	3.86	3.86	3.86	3.85	3.85	3.85	3.85	3.87	3.87	3.87	3.87	3.87	3.87	3.87	3.87
	41	TC	51155	51155	51658	52160	54085	54085	54085	54085	55573	55573	55573	55573	59396	59396	59396	59396
		S/T	0.74	0.84	1.00	1.00	0.58	0.68	0.77	1.00	0.51	0.60	0.69	0.78	0.34	0.43	0.51	0.60
		PI	3.89	3.89	3.89	3.89	3.89	3.89	3.89	3.89	3.90	3.90	3.90	3.90	3.90	3.90	3.90	3.90
	50	TC	50845	50845	51345	51844	53827	53827	53827	53827	55342	55342	55342	55342	59244	59244	59244	59244
		S/T	0.74	0.84	1.00	1.00	0.58	0.68	0.77	1.00	0.51	0.60	0.69	0.78	0.35	0.44	0.51	0.60
		PI	3.96	3.96	3.96	3.96	3.95	3.95	3.95	3.95	3.95	3.95	3.95	3.95	3.95	3.95	3.95	3.95
	59	TC	50432	50432	50927	51422	53467	53467	53467	53467	55008	55008	55008	55008	58990	58990	58990	58990
		S/T	0.75	0.85	0.95	1.00	0.59	0.69	0.78	0.88	0.52	0.61	0.70	0.79	0.35	0.44	0.52	0.61
		PI	4.06	4.06	4.06	4.06	4.04	4.04	4.04	4.04	4.04	4.04	4.04	4.04	4.04	4.04	4.04	4.04
	68	TC	49863	49863	50353	50843	52900	52900	52900	52900	54468	54468	54468	54468	58484	58484	58484	58484
		S/T	0.75	0.85	0.95	1.00	0.59	0.69	0.78	0.88	0.52	0.61	0.70	0.79	0.35	0.44	0.52	0.61
		PI	4.20	4.20	4.20	4.20	4.18	4.18	4.18	4.18	4.18	4.18	4.18	4.18	4.16	4.16	4.16	4.16
	77	TC	47610	47610	48100	48590	50549	50549	50549	51039	52018	52018	52018	52018	56035	56035	56035	56035
		S/T	0.76	0.87	0.97	1.00	0.60	0.70	0.80	0.89	0.52	0.62	0.71	0.81	0.35	0.44	0.53	0.62
		PI	4.63	4.63	4.63	4.63	4.63	4.63	4.63	4.63	4.63	4.63	4.63	4.63	4.63	4.63	4.63	4.63
	86	TC	45357	45357	45847	46337	48198	48198	48198	48688	49667	49667	49667	49667	53488	53488	53488	53488
		S/T	0.77	0.88	0.99	1.00	0.60	0.71	0.81	0.91	0.53	0.63	0.73	0.83	0.35	0.44	0.53	0.63
		PI	5.07	5.07	5.07	5.07	5.08	5.08	5.08	5.08	5.08	5.08	5.08	5.08	5.11	5.11	5.11	5.11
	95	TC	43104	43496	43888	44279	45847	45847	45847	46337	47316	47316	48002	47316	51039	51039	51039	51039
		S/T	0.79	0.90	1.00	1.00	0.61	0.72	0.83	0.93	0.53	0.64	0.74	0.85	0.34	0.44	0.54	0.64
		PI	5.54	5.54	5.54	5.54	5.56	5.56	5.56	5.56	5.57	5.57	5.58	5.57	5.61	5.61	5.61	5.61
	104	TC	40244	40633	41022	41411	42877	42877	42877	43319	44247	44247	44618	44423	47807	47807	47807	47807
		S/T	0.82	0.94	1.00	1.00	0.63	0.75	0.87	0.98	0.54	0.65	0.77	0.88	0.34	0.44	0.55	0.90
		PI	6.12	6.12	6.12	6.12	6.14	6.14	6.14	6.14	6.15	6.15	6.16	6.15	6.20	6.20	6.20	6.20
	115	TC	37223	37611	38000	38389	39750	39750	39750	40138	41013	41013	41013	41402	44415	44415	44415	44415
		S/T	0.83	0.96	1.00	1.00	0.63	0.76	0.88	1.00	0.54	0.66	0.78	0.90	0.33	0.45	0.56	0.92
		PI	6.80	6.80	6.80	6.80	6.84	6.84	6.84	6.84	6.85	6.85	6.85	6.85	6.91	6.91	6.91	6.91
	122	TC	34987	35376	35765	36154	37417	37417	37806	38195	38583	38583	38583	38972	41888	41888	41888	41888
		S/T	0.86	0.99	1.00	1.00	0.65	0.78	0.91	1.00	0.55	0.68	0.81	0.93	0.33	0.45	0.57	0.97
		PI	7.37	7.37	7.37	7.37	7.40	7.40	7.40	7.40	7.42	7.42	7.42	7.42	7.48	7.48	7.48	7.48

NOTE: Data highlighted in gray is extrapolated data and not actual test data. At 77°F outdoor conditions sweat protection activates causing a decrease in total capacity.

LEGEND:
TC: Total Cooling Capacity (BTU/hr)
S/T: Sensible Cooling Capacity Ratio
PI: Power Input (kW)
Extrapolated Data

PERFORMANCE

COOLING PERFORMANCE AT INDOOR DRY BULB SIZE 60K

COOLING PERFORMANCE AT INDOOR DRY BULB TEMPERATURE 60K (Sheet 1 of 3)

AIRFLOW (CFM)	OUTDOOR DB (°F)	ID WB(°F)	60.8				64.4				66.2				71.6			
		ID DB (°F)	73.4	77.0	80.6	84.2	73.4	77.0	80.6	84.2	73.4	77.0	80.6	84.2	73.4	77.0	80.6	84.2
1136	-22	TC	60744	60754	60754	61382	63602	64865	64865	64865	65074	65074	65074	65074	68778	68778	68778	68778
		S/T	0.67	0.74	0.82	0.88	0.54	0.61	0.68	0.75	0.48	0.55	0.62	0.69	0.35	0.42	0.48	0.54
		PI	4.79	4.79	4.79	4.79	4.80	4.80	4.80	4.80	4.81	4.81	4.81	4.81	4.84	4.84	4.84	4.84
	-10	TC	60295	60306	60306	60928	63241	64497	64497	64497	64749	64749	64749	64749	68570	68570	68570	68570
		S/T	0.67	0.75	0.82	0.89	0.55	0.62	0.69	0.76	0.49	0.56	0.62	0.70	0.35	0.42	0.48	0.55
		PI	4.34	4.34	4.34	4.34	4.34	4.34	4.34	4.34	4.34	4.34	4.34	4.34	4.36	4.36	4.36	4.36
	0	TC	59921	59932	59932	60550	62941	64191	64191	64191	64478	64478	64478	64478	68396	68396	68396	68396
		S/T	0.67	0.75	0.83	0.90	0.55	0.62	0.69	0.76	0.49	0.56	0.63	0.70	0.36	0.42	0.48	0.55
		PI	4.05	4.05	4.05	4.05	4.05	4.05	4.05	4.05	4.05	4.05	4.05	4.05	4.06	4.06	4.06	4.06
	5	TC	59746	59756	59756	60373	62826	64073	64073	64073	64381	64381	64381	64381	68350	68350	68350	68350
		S/T	0.68	0.75	0.83	0.90	0.55	0.62	0.70	0.76	0.49	0.56	0.63	0.70	0.36	0.42	0.48	0.55
		PI	3.80	3.81	3.81	3.80	3.79	3.79	3.79	3.79	3.79	3.79	3.79	3.79	3.78	3.78	3.78	3.78
	14	TC	59392	59402	59402	60016	62473	63713	63713	63713	64058	64058	64058	64058	68119	68119	68119	68119
		S/T	0.68	0.76	0.83	0.90	0.55	0.63	0.70	0.77	0.49	0.56	0.63	0.71	0.36	0.43	0.49	0.55
		PI	3.78	3.79	3.79	3.78	3.78	3.78	3.78	3.78	3.78	3.78	3.78	3.78	3.78	3.78	3.78	3.78
	23	TC	59038	59048	59048	59658	62237	63473	63473	63473	63823	63823	63823	63823	67945	67945	67945	67945
		S/T	0.68	0.76	0.84	0.91	0.56	0.63	0.70	0.77	0.50	0.57	0.63	0.71	0.36	0.43	0.49	0.56
		PI	3.78	3.78	3.78	3.78	3.78	3.78	3.78	3.78	3.78	3.78	3.78	3.78	3.79	3.79	3.79	3.79
	32	TC	58742	58753	58753	59359	62002	63233	63233	63233	63647	63647	63647	63647	67887	67887	67887	67887
		S/T	0.69	0.76	0.84	0.91	0.56	0.63	0.71	0.77	0.50	0.57	0.64	0.72	0.36	0.43	0.49	0.56
		PI	3.79	3.80	3.80	3.79	3.79	3.79	3.79	3.79	3.79	3.79	3.79	3.79	3.80	3.80	3.80	3.80
	41	TC	58447	58457	58457	59061	61767	62993	62993	62993	63441	63441	63441	63441	67829	67829	67829	67829
		S/T	0.69	0.77	0.85	0.92	0.56	0.64	0.71	0.78	0.50	0.57	0.64	0.72	0.36	0.43	0.49	0.56
		PI	3.83	3.83	3.83	3.83	3.82	3.82	3.82	3.82	3.82	3.82	3.82	3.82	3.83	3.83	3.83	3.83
	50	TC	58093	58103	58103	58703	61473	62693	62693	62693	63177	63177	63177	63177	67656	67656	67656	67656
		S/T	0.69	0.77	0.85	0.92	0.56	0.64	0.71	0.78	0.50	0.57	0.64	0.72	0.37	0.44	0.50	0.56
		PI	3.89	3.89	3.89	3.89	3.88	3.88	3.88	3.88	3.88	3.88	3.88	3.88	3.88	3.88	3.88	3.88
	59	TC	57621	57631	57631	58226	61061	62274	62274	62274	62796	62796	62796	62796	67367	67367	67367	67367
		S/T	0.70	0.78	0.86	0.93	0.57	0.64	0.72	0.79	0.51	0.58	0.65	0.73	0.37	0.44	0.50	0.57
		PI	3.99	3.99	3.99	3.99	3.97	3.97	3.97	3.97	3.97	3.97	3.97	3.97	3.96	3.96	3.96	3.96
	68	TC	56971	56981	56981	57570	60414	60414	60414	60414	62179	62179	62179	62179	66789	66789	66789	66789
		S/T	0.70	0.78	0.86	0.93	0.57	0.65	0.72	0.79	0.51	0.58	0.65	0.73	0.37	0.44	0.50	0.57
		PI	4.13	4.13	4.13	4.13	4.11	4.11	4.11	4.11	4.10	4.10	4.10	4.10	4.08	4.08	4.08	4.08
	77	TC	54333	54333	54333	54922	57668	57668	57668	57668	59433	59433	59433	59433	63944	63944	63944	63944
		S/T	0.71	0.79	0.87	0.95	0.58	0.65	0.73	0.81	0.51	0.59	0.66	0.74	0.37	0.44	0.51	0.57
		PI	4.54	4.54	4.54	4.54	4.54	4.54	4.54	4.54	4.54	4.54	4.54	4.54	4.55	4.55	4.55	4.55
	86	TC	51783	51783	52274	52764	55020	55020	55020	55020	56785	56785	56785	56785	61100	61100	61100	61100
		S/T	0.72	0.80	0.89	0.97	0.58	0.66	0.74	0.82	0.51	0.59	0.67	0.75	0.36	0.44	0.51	0.58
		PI	4.98	4.98	4.98	4.98	4.99	4.99	4.99	4.99	4.99	4.99	4.99	4.99	5.01	5.01	5.01	5.01
	95	TC	49135	49135	49626	50116	52372	52372	52372	52372	53941	53941	54824	53941	58256	58256	58256	58256
		S/T	0.73	0.82	0.90	0.99	0.58	0.67	0.75	0.84	0.52	0.60	0.68	0.76	0.36	0.44	0.51	0.59
		PI	5.44	5.44	5.44	5.44	5.46	5.46	5.46	5.46	5.47	5.47	5.48	5.47	5.51	5.51	5.51	5.51
	104	TC	46328	46328	46774	47220	49434	49434	49434	49657	50960	50960	51442	50960	55101	55101	55101	55101
		S/T	0.75	0.85	0.94	1.00	0.59	0.68	0.78	0.87	0.52	0.61	0.70	0.79	0.35	0.44	0.52	0.60
		PI	6.00	6.00	6.00	6.00	6.02	6.02	6.02	6.02	6.04	6.04	6.04	6.04	6.09	6.09	6.09	6.09
	115	TC	42901	42901	43293	43686	45846	45846	45846	46337	47318	47318	47318	47318	51245	51245	51245	51245
		S/T	0.76	0.86	0.96	1.00	0.60	0.69	0.79	0.88	0.52	0.61	0.71	0.80	0.35	0.44	0.52	0.61
		PI	6.67	6.67	6.67	6.67	6.70	6.70	6.70	6.70	6.72	6.72	6.72	6.72	6.78	6.78	6.78	6.78
	122	TC	40250	40250	40643	41036	43097	43097	43097	43490	44472	44472	44472	44472	48202	48202	48202	48202
		S/T	0.77	0.88	0.99	1.00	0.60	0.71	0.81	0.91	0.53	0.62	0.72	0.82	0.35	0.44	0.53	0.62
		PI	7.23	7.23	7.23	7.23	7.26	7.26	7.26	7.26	7.28	7.28	7.28	7.28	7.34	7.34	7.34	7.34

Manufacturer reserves the right to change, at any time, specifications and designs without notice and without obligations.

COOLING PERFORMANCE AT INDOOR DRY BULB TEMPERATURE 60K (Sheet 2 of 3)

AIRFLOW (CFM)	OUTDOOR DB (°F)	ID WB(°F)	60.8				64.4				66.2				71.6			
		ID DB (°F)	73.4	77.0	80.6	84.2	73.4	77.0	80.6	84.2	73.4	77.0	80.6	84.2	73.4	77.0	80.6	84.2
1360	-22	TC	61928	61928	62555	63183	64865	64865	64865	64865	66433	66433	66433	66433	70218	70218	70218	70218
		S/T	0.69	0.78	0.97	1.00	0.55	0.64	0.72	0.80	0.49	0.57	0.65	0.73	0.34	0.42	0.48	0.56
		PI	4.79	4.79	4.79	4.79	4.80	4.80	4.80	4.80	4.81	4.81	4.81	4.81	4.84	4.84	4.84	4.84
	-10	TC	61470	61470	62093	62716	64497	64497	64497	64497	66101	66101	66101	66101	70005	70005	70005	70005
		S/T	0.70	0.79	0.97	1.00	0.56	0.64	0.73	0.80	0.50	0.57	0.65	0.74	0.34	0.42	0.49	0.56
		PI	4.34	4.34	4.34	4.34	4.34	4.34	4.34	4.34	4.34	4.34	4.34	4.34	4.36	4.36	4.36	4.36
	0	TC	61089	61089	61708	62327	64191	64191	64191	64191	65825	65825	65825	65825	69828	69828	69828	69828
		S/T	0.70	0.79	0.98	1.00	0.56	0.65	0.73	0.81	0.50	0.58	0.65	0.74	0.35	0.42	0.49	0.57
		PI	4.13	4.13	4.13	4.13	4.13	4.13	4.13	4.13	4.13	4.13	4.13	4.13	4.14	4.14	4.14	4.14
	5	TC	60910	60910	61528	62145	64073	64073	64073	64073	65725	65725	65725	65725	69781	69781	69781	69781
		S/T	0.70	0.79	0.98	1.00	0.56	0.65	0.73	0.81	0.50	0.58	0.66	0.74	0.35	0.42	0.49	0.57
		PI	3.88	3.88	3.88	3.88	3.86	3.86	3.86	3.86	3.86	3.86	3.86	3.86	3.85	3.85	3.85	3.85
	14	TC	60549	60549	61163	61777	63713	63713	63713	63713	65396	65396	65396	65396	69545	69545	69545	69545
		S/T	0.71	0.80	0.99	1.00	0.56	0.65	0.74	0.82	0.50	0.58	0.66	0.75	0.35	0.43	0.49	0.57
		PI	3.86	3.86	3.86	3.86	3.85	3.85	3.85	3.85	3.85	3.85	3.85	3.85	3.86	3.86	3.86	3.86
	23	TC	60188	60188	60798	61408	63473	63473	63473	63473	65156	65156	65156	65156	69368	69368	69368	69368
		S/T	0.71	0.80	0.99	1.00	0.57	0.65	0.74	0.82	0.51	0.59	0.66	0.75	0.35	0.43	0.50	0.58
		PI	3.85	3.85	3.85	3.85	3.85	3.85	3.85	3.85	3.85	3.85	3.85	3.85	3.86	3.86	3.86	3.86
	32	TC	59887	59887	60494	61101	63233	63233	63233	63233	64976	64976	64976	64976	69309	69309	69309	69309
		S/T	0.72	0.80	1.00	1.00	0.57	0.66	0.74	0.82	0.51	0.59	0.67	0.75	0.35	0.43	0.50	0.58
		PI	3.87	3.87	3.87	3.87	3.86	3.86	3.86	3.86	3.87	3.87	3.87	3.87	3.88	3.88	3.88	3.88
	41	TC	59586	59586	60190	60794	62993	62993	62993	62993	64766	64766	64766	64766	69250	69250	69250	69250
		S/T	0.72	0.81	1.00	1.00	0.57	0.66	0.75	0.83	0.51	0.59	0.67	0.76	0.35	0.43	0.50	0.58
		PI	3.90	3.90	3.90	3.90	3.90	3.90	3.90	3.90	3.90	3.90	3.90	3.90	3.90	3.90	3.90	3.90
	50	TC	59225	59225	59825	60426	62693	62693	62693	62693	64497	64497	64497	64497	69073	69073	69073	69073
		S/T	0.72	0.81	1.00	1.00	0.57	0.66	0.75	0.83	0.51	0.59	0.67	0.76	0.36	0.44	0.50	0.58
		PI	3.97	3.97	3.97	3.97	3.96	3.96	3.96	3.96	3.96	3.96	3.96	3.96	3.95	3.95	3.95	3.95
	59	TC	58744	58744	59339	59934	62274	62274	62274	62274	64107	64107	64107	64107	68777	68777	68777	68777
		S/T	0.73	0.82	0.91	0.99	0.58	0.67	0.76	0.84	0.52	0.60	0.68	0.77	0.36	0.44	0.51	0.59
		PI	4.07	4.07	4.07	4.07	4.05	4.05	4.05	4.05	4.05	4.05	4.05	4.05	4.04	4.04	4.04	4.04
	68	TC	58082	58082	58670	59259	61614	61614	61614	61614	63478	63478	63478	63478	68187	68187	68187	68187
		S/T	0.73	0.82	0.91	0.99	0.58	0.67	0.76	0.84	0.52	0.60	0.68	0.77	0.36	0.44	0.51	0.59
		PI	4.21	4.21	4.21	4.21	4.19	4.19	4.19	4.19	4.18	4.18	4.18	4.18	4.16	4.16	4.16	4.16
	77	TC	55433	55433	56021	56610	58866	58866	58866	58866	60632	60632	60632	60632	65244	65244	65244	65244
		S/T	0.74	0.84	0.93	1.00	0.59	0.68	0.77	0.86	0.52	0.60	0.69	0.78	0.36	0.44	0.52	0.60
		PI	4.64	4.64	4.64	4.64	4.63	4.63	4.63	4.63	4.63	4.63	4.63	4.63	4.64	4.64	4.64	4.64
	86	TC	52784	52784	53274	53765	56119	56119	56119	56119	57885	57885	57885	57885	62398	62398	62398	62398
		S/T	0.75	0.85	0.95	1.00	0.59	0.69	0.78	0.88	0.52	0.61	0.70	0.79	0.35	0.44	0.52	0.61
		PI	5.08	5.08	5.08	5.08	5.09	5.09	5.09	5.09	5.09	5.09	5.09	5.09	5.11	5.11	5.11	5.11
	95	TC	50135	50135	50625	51116	53372	53372	53372	53863	55040	55040	55923	55040	59455	59455	59455	59455
		S/T	0.76	0.87	0.97	1.00	0.60	0.70	0.80	0.89	0.52	0.62	0.71	0.81	0.35	0.44	0.53	0.62
		PI	5.55	5.55	5.55	5.55	5.57	5.57	5.57	5.57	5.58	5.58	5.59	5.58	5.58	5.58	5.58	5.58
	104	TC	46720	46897	47382	47867	49790	49790	49790	50275	51352	51352	51828	51352	55542	55542	55542	55542
		S/T	0.79	0.90	1.00	1.00	0.61	0.72	0.83	0.93	0.53	0.64	0.74	0.85	0.34	0.44	0.54	0.64
		PI	6.13	6.13	6.13	6.13	6.16	6.16	6.16	6.16	6.17	6.17	6.18	6.17	6.19	6.19	6.19	6.19
	115	TC	43280	43668	44153	44638	46191	46191	46191	46676	47646	47646	47646	47646	51625	51625	51625	51625
		S/T	0.80	0.92	1.00	1.00	0.62	0.73	0.84	0.95	0.53	0.64	0.75	0.86	0.34	0.44	0.54	0.64
		PI	6.82	6.82	6.82	6.82	6.85	6.85	6.85	6.85	6.87	6.87	6.87	6.87	6.92	6.92	6.92	6.92
	122	TC	40563	40951	41339	41727	43377	43377	43377	43765	44832	44832	44832	45317	48617	48617	48617	48617
		S/T	0.82	0.95	1.00	1.00	0.63	0.75	0.87	0.99	0.54	0.66	0.77	0.89	0.34	0.44	0.55	0.91
		PI	7.38	7.38	7.38	7.38	7.42	7.42	7.42	7.42	7.43	7.43	7.43	7.43	7.49	7.49	7.49	7.49

Manufacturer reserves the right to change, at any time, specifications and designs without notice and without obligations.

COOLING PERFORMANCE AT INDOOR DRY BULB TEMPERATURE 60K (Sheet 3 of 3)

AIRFLOW (CFM)	OUTDOOR DB (°F)	ID WB(°F)	60.8				64.4				66.2				71.6			
		ID DB (°F)	73.4	77.0	80.6	84.2	73.4	77.0	80.6	84.2	73.4	77.0	80.6	84.2	73.4	77.0	80.6	84.2
1583	-22	TC	63183	63183	63811	64438	66105	66105	66105	66724	67665	67665	67665	67665	71531	71531	71531	71531
		S/T	0.72	0.82	1.00	1.00	0.57	0.67	0.75	0.96	0.49	0.59	0.68	0.77	0.33	0.42	0.50	0.58
		PI	4.79	4.79	4.79	4.79	4.80	4.80	4.80	4.80	4.81	4.81	4.81	4.81	4.84	4.84	4.84	4.84
	-10	TC	62716	62716	63339	63962	65730	65730	65730	66346	67327	67327	67327	67327	71315	71315	71315	71315
		S/T	0.73	0.82	1.00	1.00	0.57	0.67	0.76	0.97	0.50	0.59	0.68	0.78	0.34	0.42	0.51	0.58
		PI	4.34	4.34	4.34	4.34	4.34	4.34	4.34	4.34	4.34	4.34	4.34	4.34	4.36	4.36	4.36	4.36
	0	TC	62327	62327	62946	63566	65417	65417	65417	66031	67046	67046	67046	67046	71134	71134	71134	71134
		S/T	0.73	0.83	1.00	1.00	0.58	0.67	0.76	0.97	0.50	0.60	0.68	0.78	0.34	0.42	0.51	0.59
		PI	4.21	4.21	4.21	4.21	4.20	4.20	4.20	4.20	4.22	4.22	4.22	4.22	4.23	4.23	4.23	4.23
	5	TC	62145	62145	62762	63380	65298	65298	65298	65910	66944	66944	66944	66944	71086	71086	71086	71086
		S/T	0.73	0.83	1.00	1.00	0.58	0.68	0.76	0.98	0.50	0.60	0.69	0.78	0.34	0.42	0.51	0.59
		PI	3.95	3.95	3.95	3.95	3.94	3.94	3.94	3.94	3.94	3.94	3.94	3.94	3.93	3.93	3.93	3.93
	14	TC	61777	61777	62390	63004	64931	64931	64931	65540	66609	66609	66609	66609	70846	70846	70846	70846
		S/T	0.74	0.83	1.00	1.00	0.58	0.68	0.77	0.98	0.50	0.60	0.69	0.79	0.34	0.43	0.51	0.59
		PI	3.93	3.93	3.93	3.93	3.93	3.93	3.93	3.93	3.93	3.93	3.93	3.93	3.94	3.94	3.94	3.94
	23	TC	61408	61408	62018	62628	64686	64686	64686	65293	66364	66364	66364	66364	70665	70665	70665	70665
		S/T	0.74	0.84	1.00	1.00	0.59	0.68	0.77	0.99	0.51	0.60	0.69	0.79	0.34	0.43	0.52	0.59
		PI	3.93	3.93	3.93	3.93	3.92	3.92	3.92	3.92	3.93	3.93	3.93	3.93	3.94	3.94	3.94	3.94
	32	TC	61101	61101	61708	62315	64442	64442	64442	65046	66181	66181	66181	66181	70605	70605	70605	70605
		S/T	0.74	0.84	1.00	1.00	0.59	0.69	0.77	0.99	0.51	0.61	0.70	0.79	0.34	0.43	0.52	0.60
		PI	3.94	3.94	3.94	3.94	3.94	3.94	3.94	3.94	3.95	3.95	3.95	3.95	3.96	3.96	3.96	3.96
	41	TC	60794	60794	61398	62002	64197	64197	64197	64799	65968	65968	65968	65968	70545	70545	70545	70545
		S/T	0.75	0.85	1.00	1.00	0.59	0.69	0.78	1.00	0.51	0.61	0.70	0.80	0.34	0.43	0.52	0.60
		PI	3.98	3.98	3.98	3.98	3.97	3.97	3.97	3.97	3.98	3.98	3.98	3.98	3.99	3.99	3.99	3.99
	50	TC	60426	60426	61026	61626	63891	63891	63891	64490	65693	65693	65693	65693	70365	70365	70365	70365
		S/T	0.75	0.85	1.00	1.00	0.59	0.69	0.78	1.00	0.51	0.61	0.70	0.80	0.35	0.44	0.52	0.60
		PI	4.04	4.04	4.04	4.04	4.03	4.03	4.03	4.03	4.04	4.04	4.04	4.04	4.04	4.04	4.04	4.04
	59	TC	59934	59934	60530	61125	63463	63463	63463	64058	65296	65296	65296	65296	70064	70064	70064	70064
		S/T	0.76	0.86	0.96	1.00	0.60	0.70	0.79	0.89	0.52	0.62	0.71	0.81	0.35	0.44	0.53	0.61
		PI	4.14	4.14	4.14	4.14	4.13	4.13	4.13	4.13	4.13	4.13	4.13	4.13	4.12	4.12	4.12	4.12
	68	TC	59259	59259	59848	60436	62791	62791	62791	63380	64655	64655	64655	64655	69462	69462	69462	69462
		S/T	0.76	0.86	0.96	1.00	0.60	0.70	0.79	0.89	0.52	0.62	0.71	0.81	0.35	0.44	0.53	0.61
		PI	4.29	4.29	4.29	4.29	4.27	4.27	4.27	4.27	4.27	4.27	4.27	4.27	4.25	4.25	4.25	4.25
	77	TC	56512	56512	57100	57689	60044	60044	60044	60632	61810	61810	61810	61810	66519	66519	66519	66519
		S/T	0.77	0.88	0.99	1.00	0.60	0.71	0.81	0.91	0.53	0.63	0.73	0.82	0.35	0.44	0.53	0.62
		PI	4.73	4.73	4.73	4.73	4.73	4.73	4.73	4.73	4.72	4.72	4.72	4.72	4.73	4.73	4.73	4.73
	86	TC	53863	54353	54942	55531	57297	57297	57297	57885	58965	58965	58965	58965	63576	63576	63576	63576
		S/T	0.79	0.90	1.00	1.00	0.61	0.72	0.83	0.93	0.53	0.63	0.74	0.84	0.34	0.44	0.54	0.63
		PI	5.18	5.18	5.18	5.18	5.19	5.19	5.19	5.19	5.19	5.19	5.19	5.19	5.22	5.22	5.22	5.22
	95	TC	51116	51606	52097	52587	54451	54451	54451	55040	56119	56119	57002	56119	60534	60534	60534	60534
		S/T	0.80	0.92	1.00	1.00	0.62	0.73	0.84	0.95	0.53	0.64	0.75	0.86	0.34	0.44	0.54	0.65
		PI	5.66	5.66	5.66	5.66	5.68	5.68	5.68	5.68	5.69	5.69	5.70	5.69	5.73	5.73	5.73	5.73
	104	TC	47602	48088	48573	49058	50769	50769	50990	51528	52375	52375	52851	52595	56565	56565	56565	56565
		S/T	0.83	0.96	1.00	1.00	0.63	0.76	0.88	1.00	0.54	0.66	0.78	0.90	0.33	0.45	0.56	0.90
		PI	6.25	6.25	6.25	6.25	6.27	6.27	6.27	6.27	6.29	6.29	6.29	6.29	6.34	6.34	6.34	6.34
	115	TC	44056	44541	45026	45512	47064	47064	47549	48035	48617	48617	48617	49102	52595	52595	52595	52595
		S/T	0.85	0.98	1.00	1.00	0.64	0.77	0.90	1.00	0.55	0.67	0.80	0.92	0.33	0.45	0.56	0.92
		PI	6.95	6.95	6.95	6.95	6.98	6.98	6.98	6.98	7.00	7.00	7.00	7.00	7.06	7.06	7.06	7.06
	122	TC	41339	41727	42115	42503	44250	44250	44735	45220	45706	45706	45706	46191	49587	49587	49587	49587
		S/T	0.87	1.00	1.00	1.00	0.65	0.79	0.92	1.00	0.55	0.69	0.82	0.95	0.33	0.45	0.57	0.97
		PI	7.53	7.53	7.53	7.53	7.56	7.56	7.56	7.56	7.58	7.58	7.58	7.58	7.64	7.64	7.64	7.64

NOTE: Data highlighted in gray is extrapolated data and not actual test data. At 77°F outdoor conditions sweat protection activates causing a decrease in total capacity.

LEGEND:
TC: Total Cooling Capacity (BTU/hr)
S/T: Sensible Cooling Capacity Ratio
PI: Power Input (kW)
Extrapolated Data

HEATING PERFORMANCE - AHU

HEATING PERFORMANCE AT INDOOR DRY BULB TEMPERATURE SIZE 36K

AIRFLOW (CFM)	HEATING PERFORMANCE AT INDOOR DRY BULB TEMPERATURE								
	OUTDOOR DB (°F)	TC:TOTAL CAPACITY IN BTU/HR				PI:TOTAL POWER IN KILOWATTS			
		INDOOR CONDITIONS (DB °F)				INDOOR CONDITIONS (DB °F)			
		60.8	68.0	71.6	75.2	60.8	68.0	71.6	75.2
865	-22.0	17815	17625	17498	17434	1.91	1.96	1.99	2.02
	-10.0	20498	20279	20133	20060	2.23	2.30	2.34	2.37
	0.0	22734	22491	22329	22248	2.51	2.58	2.62	2.65
	5.0	23930	23674	23504	23419	2.66	2.73	2.78	2.81
	14.0	25552	25279	25098	25007	2.83	2.92	2.96	3.00
	17.0	26769	26483	26293	26197	3.01	3.10	3.15	3.19
	22.0	27872	27574	27376	27277	3.02	3.11	3.16	3.21
	27.0	28963	28566	28368	28269	3.06	3.15	3.20	3.25
	32.0	29558	29260	29062	28864	3.09	3.19	3.24	3.29
	37.0	31343	30947	30748	30550	3.16	3.26	3.31	3.36
	42.0	34220	33823	33625	33327	3.23	3.34	3.39	3.44
	44.6	37246	36814	35923	35626	3.27	3.43	3.43	3.48
	52.0	39189	38694	38397	38200	3.35	3.46	3.51	3.56
	57.0	40970	40476	40179	39882	3.40	3.51	3.57	3.62
	62.0	42752	42158	41861	41564	3.46	3.57	3.63	3.68
	64.4	43642	43049	42752	42356	3.48	3.60	3.65	3.71
971	-22.0	18195	18004	17878	17814	1.93	1.98	2.01	2.04
	-10.0	20935	20716	20570	20497	2.26	2.32	2.36	2.39
	0.0	23219	22976	22814	22733	2.53	2.60	2.65	2.68
	5.0	24440	24185	24014	23929	2.68	2.76	2.80	2.84
	14.0	26097	25824	25642	25551	2.86	2.94	2.99	3.03
	17.0	27340	27054	26863	26768	3.04	3.13	3.18	3.22
	22.0	28467	28169	27971	27872	3.05	3.14	3.19	3.24
	27.0	29558	29161	28963	28864	3.08	3.18	3.23	3.28
	32.0	30252	29856	29657	29459	3.12	3.22	3.27	3.32
	37.0	32038	31641	31443	31244	3.19	3.29	3.34	3.39
	42.0	35013	34517	34319	34121	3.26	3.37	3.42	3.47
	44.6	38146	37606	36616	36418	3.30	3.46	3.46	3.51
	52.0	40080	39486	39288	38991	3.38	3.49	3.54	3.60
	57.0	41861	41267	40970	40773	3.43	3.54	3.60	3.65
	62.0	43642	43049	42752	42455	3.48	3.60	3.66	3.71
	64.4	44533	43939	43642	43346	3.51	3.63	3.68	3.74
1083	-22.0	18407	18153	18089	17962	1.94	2.00	2.03	2.06
	-10.0	21179	20887	20814	20668	2.28	2.34	2.38	2.42
	0.0	23489	23165	23084	22922	2.56	2.63	2.67	2.71
	5.0	24725	24384	24298	24128	2.71	2.79	2.83	2.87
	14.0	26401	26037	25946	25764	2.89	2.97	3.02	3.07
	17.0	27658	27277	27181	26991	3.07	3.16	3.21	3.26
	22.0	28764	28368	28269	28070	3.08	3.17	3.22	3.27
	27.0	29856	29459	29260	29062	3.12	3.21	3.26	3.31
	32.0	30550	30153	29955	29756	3.15	3.25	3.30	3.35
	37.0	32335	31938	31740	31542	3.23	3.33	3.38	3.43
	42.0	35410	34914	34617	34418	3.30	3.40	3.46	3.51
	44.6	38541	38002	37012	36814	3.34	3.50	3.50	3.55
	52.0	40476	39981	39684	39387	3.42	3.53	3.58	3.64
	57.0	42356	41762	41465	41168	3.47	3.59	3.64	3.70
	62.0	44137	43543	43247	42950	3.53	3.64	3.70	3.76
	64.4	45028	44434	44137	43840	3.55	3.67	3.73	3.79

NOTE: Data highlighted in gray is extrapolated data and not actual test data. At 77°F outdoor conditions sweat protection activates causing a decrease in total capacity.

HEATING PERFORMANCE - AHU

HEATING PERFORMANCE AT INDOOR DRY BULB TEMPERATURE SIZE 48K

AIRFLOW (CFM)	HEATING PERFORMANCE AT INDOOR DRY BULB TEMPERATURE								
	OUTDOOR DB (°F)	TC:TOTAL CAPACITY IN BTU/HR				PI:TOTAL POWER IN KILOWATTS			
		Indoor Conditions (DB°F)				Indoor Conditions (DB °F)			
		60.8	68.0	71.6	75.2	60.8	68.0	71.6	75.2
906	-22.0	25820	25509	25385	25198	3.25	3.36	3.40	3.45
	-10.0	29709	29351	29208	28993	3.81	3.93	3.98	4.04
	0.0	32950	32553	32394	32156	4.28	4.41	4.47	4.53
	5.0	34683	34265	34098	33848	4.53	4.67	4.73	4.80
	14.0	37035	36589	36410	36142	4.84	4.98	5.05	5.12
	17.0	38798	38331	38144	37863	5.14	5.30	5.37	5.44
	22.0	41104	40609	40411	40114	5.15	5.31	5.39	5.45
	27.0	43382	42788	42491	42194	5.20	5.36	5.43	5.51
	32.0	44967	44373	44076	43778	5.25	5.41	5.48	5.56
	37.0	48335	47740	47344	47047	5.36	5.51	5.60	5.68
	42.0	53485	52792	52395	52098	5.45	5.62	5.71	5.79
	44.6	58985	58220	56438	56042	5.52	5.78	5.78	5.86
	52.0	62577	61785	61389	60894	5.64	5.81	5.90	5.99
	57.0	65943	65052	64656	64260	5.71	5.89	5.98	6.07
	62.0	69409	68419	67924	67528	5.79	.97	6.07	6.16
	64.4	70993	70003	69508	69112	5.83	6.01	6.11	6.20
1095	-22.0	26359	26048	25862	25737	3.29	3.39	3.44	3.49
	-10.0	30329	29971	29757	29614	3.86	3.97	4.03	4.08
	0.0	33638	33241	33003	32844	4.33	4.45	4.52	4.58
	5.0	35407	34990	34739	34572	4.59	4.72	4.79	4.86
	14.0	37808	37362	37094	36916	4.89	5.04	5.11	5.18
	17.0	39608	39141	38861	38674	5.20	5.35	5.42	5.50
	22.0	41996	41500	41203	41005	5.21	5.36	5.43	5.51
	27.0	44274	43679	43382	43085	5.26	5.41	5.49	5.57
	32.0	45957	45264	44967	44670	5.31	5.46	5.54	5.62
	37.0	49325	48731	48335	48037	5.41	5.57	5.65	5.74
	42.0	54574	53881	53485	53188	5.51	5.68	5.77	5.85
	44.6	60173	59408	57626	57230	5.58	5.84	5.84	5.92
	52.0	63864	62973	62577	62181	5.70	5.87	5.96	6.05
	57.0	67330	66438	65943	65547	5.77	5.95	6.05	6.14
	62.0	70795	69805	69310	68815	5.85	6.04	6.13	6.22
	64.4	72379	71488	70993	70498	5.89	6.08	6.17	6.26
1283	-22.0	26611	26300	26114	25989	3.32	3.42	3.47	3.52
	-10.0	30619	30261	30047	29904	3.89	4.01	4.06	4.12
	0.0	33959	33562	33324	33166	4.37	4.50	4.56	4.62
	5.0	35746	35328	35077	34910	4.63	4.77	4.83	4.90
	14.0	38169	37723	37456	37277	4.94	5.09	5.15	5.23
	17.0	39987	39519	39239	39052	5.25	5.41	5.47	5.55
	22.0	42392	41897	41599	41401	5.26	5.41	5.49	5.57
	27.0	44670	44076	43778	43580	5.31	5.46	5.54	5.62
	32.0	46354	45759	45462	45066	5.36	5.51	5.60	5.68
	37.0	49820	49127	48830	48533	5.46	5.63	5.71	5.80
	42.0	55169	54376	54079	53683	5.57	5.74	5.83	5.91
	44.6	60877	60002	58220	57824	5.64	5.90	5.90	5.99
	52.0	64458	63666	63270	62775	5.75	5.93	6.02	6.11
	57.0	68023	67132	66636	66141	5.83	6.02	6.11	6.20
	62.0	71488	70498	70003	69607	5.91	6.10	6.19	6.29
	64.4	73171	72181	71686	71191	5.95	6.14	6.23	6.33

NOTE: Data highlighted in gray is extrapolated data and not actual test data. At 77°F outdoor conditions sweat protection activates causing a decrease in total capacity.

HEATING PERFORMANCE - AHU

HEATING PERFORMANCE AT INDOOR DRY BULB TEMPERATURE SIZE 60K

AIRFLOW (CFM)	HEATING PERFORMANCE AT INDOOR DRY BULB TEMPERATURE								
	OUTDOOR DB (°F)	TC:TOTAL CAPACITY IN BTU/HR				PI:TOTAL POWER IN KILOWATTS			
		INDOOR CONDITIONS (DB°F)				INDOOR CONDITIONS (DB °F)			
		60.8	68.0	71.6	75.2	60.8	68.0	71.6	75.2
1136	-22.0	24053	23747	23563	23441	3.15	3.25	3.27	3.32
	-10.0	27675	27323	27112	26971	3.69	3.80	3.83	3.88
	0.0	30694	30304	30069	29913	4.14	4.27	4.30	4.36
	5.0	32309	31898	31651	31487	4.39	4.52	4.56	4.62
	14.0	34499	34060	33797	33622	4.68	4.82	4.86	4.93
	17.0	36142	35682	35406	35223	4.98	5.12	5.16	5.23
	22.0	38953	38458	38160	37962	4.96	5.09	5.15	5.22
	27.0	41629	41035	40737	40440	4.97	5.09	5.16	5.23
	32.0	43711	43116	42720	42422	4.97	5.10	5.16	5.23
	37.0	47477	46883	46486	46189	5.03	5.15	5.22	5.29
	42.0	53127	52334	52037	51640	5.07	5.21	5.28	5.35
	44.6	59102	58220	56240	55844	5.13	5.32	5.34	5.41
	52.0	63072	62181	61785	61389	5.17	5.31	5.38	5.45
	57.0	66834	65943	65547	65151	5.20	5.34	5.42	5.49
	62.0	70696	69805	69310	68815	5.23	5.37	5.45	5.52
	64.4	72577	71587	71092	70597	5.24	5.39	5.46	5.54
1360	-22.0	24562	24255	24072	23949	3.18	3.28	3.31	3.35
	-10.0	28261	27908	27697	27556	3.73	3.84	3.88	3.92
	0.0	31344	30953	30718	30562	4.18	4.31	4.35	4.40
	5.0	32993	32581	32334	32170	4.43	4.57	4.61	4.66
	14.0	35229	34790	34526	34351	4.73	4.87	4.92	4.97
	17.0	36907	36447	36171	35986	5.03	5.18	5.22	5.28
	22.0	39746	39251	38953	38755	5.01	5.14	5.21	5.27
	27.0	42422	41927	41629	41332	5.02	5.14	5.21	5.28
	32.0	44603	44008	43612	43314	5.02	5.15	5.22	5.28
	37.0	48469	47775	47477	47180	5.07	5.20	5.27	5.34
	42.0	54217	53424	53127	52731	5.12	5.26	5.33	5.40
	44.6	60290	59408	57428	57032	5.17	5.37	5.39	5.46
	52.0	64359	63468	63072	62676	5.22	5.36	5.43	5.50
	57.0	68221	67330	66834	66438	5.25	5.39	5.46	5.54
	62.0	72082	71191	70696	70201	5.28	5.42	5.50	5.57
	64.4	73963	72973	72577	72082	5.29	5.44	5.51	5.58
1583	-22.0	24778	24472	24289	24105	3.21	3.32	3.34	3.38
	-10.0	28510	28158	27947	27736	3.77	3.88	3.91	3.96
	0.0	31620	31230	30995	30761	4.23	4.36	4.39	4.45
	5.0	33283	32873	32626	32379	4.48	4.62	4.65	4.71
	14.0	35540	35101	34838	34575	4.78	4.93	4.96	5.03
	17.0	37232	36773	36497	36221	5.07	5.23	5.27	5.34
	22.0	40143	39647	39350	39052	5.06	5.19	5.26	5.33
	27.0	42819	42323	42026	41729	5.06	5.20	5.27	5.33
	32.0	44999	44405	44107	43711	5.06	5.20	5.27	5.34
	37.0	48964	48270	47973	47576	5.12	5.26	5.33	5.40
	42.0	54713	54019	53623	53226	5.17	5.31	5.38	5.45
	44.6	60773	60002	57923	57626	5.22	5.42	5.44	5.51
	52.0	64953	64161	63666	63270	5.27	5.41	5.48	5.55
	57.0	68914	68023	67528	67132	5.29	5.44	5.51	5.58
	62.0	72874	71884	71389	70993	5.32	5.47	5.54	5.62
	64.4	74756	73765	73270	72775	5.34	5.48	5.56	5.63

NOTE: Data highlighted in gray is extrapolated data and not actual test data. At 77°F outdoor conditions sweat protection activates causing a decrease in total capacity.

COOLING - CASSETTE

MODEL	COOLING			OUTDOOR CONDITIONS (DB)												
	Indoor Conditions DB	Indoor Conditions WB		(-22°F) (-25°C)	-13°F (-25°C)	-4°F (-20C°)	0°F (-17°C)	5°F (-15°C)	17°F (-8°C)	47°F (8°C)	77°F (25°C)	86°F (30°C)	95°F (35°C)	104°F (40°C)	113°F (45°C)	122°F (50°C)
36K	69.8°F (21°C)	59°F (15°C)	TC	45.77	44.45	43.13	42.54	41.81	43.30	35.17	32.29	33.76	31.19	26.87	18.52	17.12
			SC	35.06	34.05	33.04	29.82	29.45	30.26	25.81	24.49	25.16	23.89	21.89	17.408	16.19
			Input	2.46	2.66	2.85	2.94	3.04	2.75	1.89	2.58	3.49	3.61	3.18	2.34	2.58
	75.2°F (24°C)	62.6°F (17°C)	TC	48.01	46.69	45.37	44.79	44.05	45.54	37.41	34.53	36.00	33.43	29.12	20.77	19.37
			SC	36.80	35.79	34.78	34.33	33.77	34.91	28.68	26.47	27.60	25.63	22.32	15.92	14.85
			Input	2.49	2.68	2.88	2.96	3.07	2.78	1.92	2.61	3.52	3.64	3.20	2.37	2.61
	80.6°F (27°C)	66.2°F (19°C)	TC	50.17	48.85	47.53	46.94	46.21	47.70	39.57	36.69	38.16	35.59	31.27	22.93	21.53
			SC	38.16	37.16	36.16	35.71	35.15	36.28	30.10	27.91	27.50	27.08	23.79	17.44	16.37
			Input	2.53	2.72	2.91	3.00	3.11	2.82	1.95	2.65	3.56	3.67	3.24	2.40	2.65
	89.6°F (32°C)	73.4°F (23°C)	TC	54.43	53.11	51.79	51.20	50.47	51.96	43.83	40.95	42.41	39.85	35.53	27.18	25.78
			SC	38.39	37.45	36.52	36.11	35.59	36.64	30.91	28.88	29.91	28.10	25.06	19.17	18.18
			Input	2.60	2.80	2.99	3.08	3.19	2.90	2.03	2.73	3.64	3.75	3.32	2.48	2.73
48K	69.8°F (21°C)	59°F (15°C)	TC	45.24	45.92	46.61	46.92	47.30	52.76	51.36	47.38	44.90	41.92	31.51	26.33	21.23
			SC	34.27	34.79	35.31	34.33	34.51	37.13	36.39	34.37	33.14	31.76	26.42	24.08	21.23
			Input	3.58	3.54	3.49	3.47	3.45	4.58	3.56	4.66	5.04	5.21	3.64	3.34	3.16
	75.2°F (24°C)	62.6°F (17°C)	TC	47.06	47.75	48.43	48.74	49.12	54.58	53.18	49.20	46.72	43.75	33.33	28.15	23.05
			SC	36.33	36.86	37.39	37.62	37.92	42.13	41.05	37.98	36.07	33.77	25.73	21.73	17.80
			Input	3.55	3.50	3.46	3.44	3.41	4.54	3.52	4.62	5.00	5.17	3.60	3.30	3.12
	80.6°F (27°C)	66.2°F (19°C)	TC	49.07	49.76	50.44	50.75	51.13	56.59	55.19	51.21	48.73	45.76	35.34	30.16	25.06
			SC	37.77	38.29	38.82	39.06	39.35	43.55	42.48	39.41	37.51	35.22	27.20	23.21	19.29
			Input	3.57	3.52	3.48	3.46	3.43	4.56	3.54	4.64	5.02	5.19	3.62	3.32	3.14
	89.6°F (32°C)	73.4°F (23°C)	TC	53.48	54.17	54.86	55.16	55.54	61.00	59.60	55.62	53.14	50.17	39.75	34.57	29.48
			SC	41.36	41.89	42.42	42.66	42.95	47.17	46.09	43.01	41.10	38.79	30.74	26.73	22.79
			Input	3.62	3.58	3.53	3.51	3.49	4.62	3.60	4.70	5.08	5.25	3.67	3.38	3.19

NOTE: Data highlighted in gray is extrapolated data and not actual test data. At 77◦F outdoor conditions sweat protection activates causing a decrease in total capacity

LEGEND:
DB --- Dry Bulb
WB --- Wet Bulb
TC --- Total Net Cooling Capacity (kBTU/Hr))
SC --- Sensible Capacity (kBTU/Hr)
Input --- Total Power (kW)

HEATING - CASSETTE

MODEL	HEATING		OUTDOOR CONDITIONS (DB)											
	Indoor Conditions DB		-22°F (-30°C)	-13°F (-25°C)	-4°F (-20°C)	0°F (-17°C)	5°F (-15°C)	17°F (-8°C)	19.4°F (-7°C)	24.8°F (-4°C)	32°F (0°C)	39.2°F (4°C)	44.6°F (7°C)	53.6°F (12°C)
36K	59°F (15°C)	TC	12.70	16.90	23.58	25.86	27.17	31.15	31.40	34.02	34.80	38.02	37.63	47.87
		Input	3.08	3.35	3.84	3.94	3.91	3.77	3.77	3.88	3.51	3.60	3.48	3.97
		COP	1.21	1.48	1.80	1.92	2.04	2.42	2.44	2.57	2.91	3.10	3.17	3.53
	64.4°F (18°C)	TC	14.18	18.39	25.07	27.35	28.65	32.63	32.89	35.50	36.29	39.51	39.12	49.35
		Input	3.35	3.61	4.10	4.20	4.18	4.03	4.03	4.14	3.77	3.86	3.74	4.24
		COP	1.24	1.49	1.79	1.91	2.01	2.37	2.39	2.51	2.82	3.00	3.07	3.41
	69°F (20.5°C)	TC	15.45	19.65	26.33	28.61	29.92	33.90	34.15	36.77	37.55	40.77	40.38	50.62
		Input	3.08	3.35	3.84	3.94	3.91	3.77	3.77	3.88	3.51	3.60	3.48	3.97
		COP	1.47	1.72	2.01	2.13	2.24	2.64	2.65	2.78	3.14	3.32	3.40	3.74
	71.6°F (22°C)	TC	16.16	20.37	27.05	29.33	30.63	34.61	34.87	37.48	38.27	41.49	41.10	51.33
		Input	3.70	3.96	4.45	4.55	4.53	4.38	4.38	4.49	4.12	4.21	4.09	4.59
		COP	1.28	1.51	1.78	1.89	1.98	2.32	2.33	2.45	2.72	2.89	2.95	3.28
48K	59°F (15°C)	TC	14.19	18.98	28.54	26.42	32.38	46.98	43.86	48.91	51.23	54.45	57.66	57.24
		Input	3.74	4.14	4.75	4.30	4.73	5.47	5.13	5.28	5.38	5.15	4.94	4.22
		COP	1.11	1.34	1.76	1.80	2.01	2.52	2.51	2.71	2.79	3.10	3.42	3.98
	64.4°F (18°C)	TC	11.94	16.73	26.29	24.16	30.13	44.73	41.61	46.66	48.98	52.20	55.41	54.99
		Input	3.88	4.28	4.89	4.44	4.86	5.61	5.27	5.41	5.52	5.28	5.07	4.35
		COP	0.90	1.15	1.58	1.59	1.82	2.34	2.31	2.53	2.60	2.90	3.20	3.70
	69°F (20.5°C)	TC	10.02	14.81	24.37	22.25	28.21	42.81	39.69	44.74	47.07	50.28	53.49	53.07
		Input	4.00	4.39	5.01	4.56	4.98	5.73	5.39	5.53	5.64	5.40	5.19	4.47
		COP	0.73	0.99	1.43	1.43	1.66	2.19	2.16	2.37	2.45	2.73	3.02	3.48
	71.6°F (22°C)	TC	8.94	13.73	23.29	21.16	27.13	41.73	38.61	43.66	45.98	49.20	52.41	51.99
		Input	4.06	4.46	5.08	4.63	5.05	5.80	5.45	5.60	5.71	5.47	5.26	4.54
		COP	0.65	0.90	1.34	1.34	1.57	2.11	2.08	2.29	2.36	2.64	2.92	3.36

LEGEND
DB --- Dry Bulb
TH --- Total Net Heating Capacity (kBTU/Hr)
COP --- (W/W)
Input --- Total Power (kW)

COOLING - DUCTED

MODEL	COOLING Indoor Conditions DB	WB		OUTDOOR CONDITIONS (DB) (-22°F) (-25°C)	-13°F (-25°C)	-4°F (-20°C)	0°F (-17°C)	5°F (-15°C)	17°F (-8°C)	47°F (8°C)	77°F (25°C)	86°F (30°C)	95°F (35°C)	104°F (40°C)	113°F (45°C)	122°F (50°C)
36K	69.8°F (21°C)	59°F (15°C)	TC	37.00	38.54	39.73	34.59	33.96	31.62	28.55	29.72	29.46	26.95	23.08	16.63	13.74
			SC	26.00	27.08	27.92	25.32	24.87	23.19	22.10	22.36	22.25	21.19	19.27	16.33	11.78
			Input	3.14	3.34	3.48	2.03	1.77	1.72	1.48	2.62	3.54	3.68	3.25	2.41	2.02
	75.2°F (24°C)	62.6°F (17°C)	TC	39.01	40.64	41.90	45.43	44.38	46.19	30.22	31.99	31.75	29.08	24.81	18.05	15.29
			SC	27.34	28.48	29.36	30.86	31.12	33.12	23.57	23.97	23.85	22.80	20.80	17.77	13.54
			Input	3.40	3.61	3.76	3.14	3.36	3.51	1.51	2.66	6.62	3.76	3.31	2.43	2.03
	80.6°F (27°C)	66.2°F (19°C)	TC	45.98	47.90	49.38	48.05	46.75	48.83	32.15	34.51	34.41	36.35	26.80	19.63	16.73
			SC	30.66	31.93	32.92	32.16	31.64	45.65	25.03	25.48	25.42	26.36	22.31	19.18	15.16
			Input	2.85	3.03	3.16	3.34	3.34	3.54	1.54	2.71	3.40	3.84	3.36	2.45	2.01
	89.6°F (32°C)	73.4°F (23°C)	TC	50.04	52.12	53.74	52.89	51.51	53.21	37.92	40.26	39.33	37.88	31.18	22.64	18.19
			SC	30.73	32.01	33.00	32.60	32.26	49.86	26.74	26.97	26.61	27.12	23.80	20.75	18.04
			Input	3.34	3.55	3.70	3.79	3.50	3.59	2.74	2.81	3.65	4.01	3.48	2.47	2.59
48K	69.8°F (21°C)	59°F (15°C)	TC	40.50	42.19	43.49	46.27	46.56	53.19	51.17	47.34	44.97	41.93	31.32	25.08	19.83
			SC	29.54	30.78	31.73	33.05	33.13	36.38	35.26	33.36	32.30	30.79	25.81	22.88	19.49
			Input	2.96	3.15	3.28	3.46	3.51	3.20	3.64	4.74	5.10	5.21	3.63	3.33	3.15
	75.2°F (24°C)	62.6°F (17°C)	TC	42.73	44.51	45.89	48.82	49.65	56.96	52.38	49.37	48.10	45.14	33.86	28.26	21.92
			SC	30.90	32.19	33.18	34.57	34.98	38.40	36.28	34.09	34.19	32.73	27.80	25.27	21.48
			Input	3.10	3.30	3.44	3.62	3.64	3.35	3.55	4.70	5.16	5.29	3.66	3.37	3.18
	80.6°F (27°C)	66.2°F (19°C)	TC	45.75	47.66	49.13	52.27	54.00	60.60	53.28	51.14	50.11	48.44	37.42	27.46	27.12
			SC	32.39	33.74	34.78	36.23	37.15	60.58	36.77	35.86	35.40	34.27	31.58	25.66	26.42
			Input	3.22	3.43	3.57	3.76	3.76	3.48	3.55	4.77	5.21	5.35	3.68	3.41	3.78
	89.6°F (32°C)	73.4°F (23°C)	TC	50.88	53.00	54.64	58.13	60.55	66.57	62.30	52.17	51.79	49.13	36.21	34.64	31.87
			SC	32.26	33.61	34.65	36.09	37.99	40.18	38.52	34.43	34.34	31.75	29.68	22.74	28.46
			Input	3.21	3.42	3.56	3.74	3.98	3.69	4.06	4.80	5.27	5.52	3.16	1.51	3.85
58K	69.8°F (21°C)	59°F (15°C)	TC	59.90	58.79	57.69	59.35	55.73	54.04	49.05	48.93	46.45	48.41	45.25	42.03	40.96
			SC	19.32	18.97	18.61	15.34	16.18	14.32	16.30	15.04	14.63	15.62	16.37	17.09	18.23
			Input	2.36	2.53	2.71	3.03	3.09	3.03	3.03	4.02	4.54	4.83	4.99	5.23	4.94
	75.2°F (24°C)	62.6°F (17°C)	TC	65.07	63.96	62.86	64.52	60.90	59.21	54.22	54.10	51.62	53.58	50.42	47.20	46.13
			SC	52.57	51.68	50.79	52.13	49.20	47.84	43.81	43.71	41.71	43.29	40.74	38.14	37.28
			Input	2.83	3.01	3.18	3.51	3.57	3.51	3.51	4.49	5.02	5.30	5.47	5.71	5.42
	80.6°F (27°C)	66.2°F (19°C)	TC	70.26	69.16	68.05	69.72	66.10	64.41	59.41	59.30	56.82	58.78	55.62	52.40	51.33
			SC	49.74	48.96	48.17	48.33	45.47	64.39	41.00	41.58	40.14	41.59	46.94	48.97	50.01
			Input	3.40	3.57	3.74	4.07	4.13	4.07	4.07	5.05	5.58	5.87	6.03	6.27	5.98
	89.6°F (32°C)	73.4°F (23°C)	TC	80.83	79.73	78.62	80.29	76.67	74.98	69.99	69.87	67.39	69.35	66.19	62.97	61.90
			SC	57.23	56.44	55.66	55.65	52.75	74.96	48.30	48.99	47.61	49.06	55.86	58.84	60.30
			Input	4.52	4.69	4.86	5.19	5.25	5.19	5.19	6.17	6.70	6.99	7.15	7.39	7.10

NOTE: Data highlighted in gray is extrapolated data, and not actual test data. At 77°F outdoor conditions, sweat protection activates causing a decrease in total capacity.

LEGEND:
DB --- Dry Bulb
WB --- Wet Bulb
TC --- Total Net Cooling Capacity (kBTU/Hr)
SC --- Sensible Capacity (kBTU/Hr)
Input --- Total Power (kW)

HEATING - DUCTED

MODEL	HEATING		OUTDOOR CONDITIONS (DB)											
	Indoor Conditions DB		-22°F (-30°C)	-13°F (-25°C)	-4°F (-20°C)	0°F (-17°C)	5°F (-15°C)	17°F (-8°C)	19.4°F (-7°C)	24.8°F (-4°C)	32°F (0°C)	39.2°F (4°C)	44.6°F (7°C)	53.6°F (12°C)
36K	59°F (15°C)	TC	16.57	20.69	24.67	29.09	29.65	33.78	31.88	36.97	39.83	42.76	45.55	46.06
		Input	3.99	4.12	4.23	4.27	4.27	4.20	3.90	4.24	4.29	3.89	3.86	3.44
		COP	1.22	1.47	1.71	2.00	2.03	2.36	2.40	2.55	2.72	3.23	3.46	3.92
	64.4°F (18°C)	TC	17.62	21.98	25.93	25.29	29.30	34.18	35.37	37.89	40.66	41.53	46.80	44.59
		Input	3.71	3.92	4.24	3.98	4.33	4.45	4.20	4.34	4.36	4.47	4.14	3.59
		COP	1.39	1.64	1.79	1.86	1.98	2.25	2.47	2.56	2.73	3.01	3.32	3.64
	69°F (20.5°C)	TC	17.36	21.82	25.57	27.29	28.77	34.82	34.71	37.73	39.63	41.37	45.84	43.62
		Input	3.73	4.07	4.33	4.55	4.47	4.50	4.33	4.52	4.50	4.23	4.28	3.72
		COP	1.36	1.57	1.73	1.76	1.89	2.27	2.35	2.45	2.58	2.87	3.14	3.44
	71.6°F (22°C)	TC	13.98	16.83	20.28	22.43	23.77	29.42	30.75	34.15	37.25	41.84	45.57	43.40
		Input	2.84	3.05	3.26	3.39	3.48	3.66	3.74	3.93	4.10	4.38	4.39	3.92
		COP	1.44	1.62	1.82	1.94	2.00	2.36	2.41	2.55	2.66	2.80	3.04	3.24
48K	59°F (15°C)	TC	20.68	26.76	33.02	28.15	39.50	46.28	46.40	49.18	56.48	61.03	57.65	57.16
		Input	5.01	5.15	5.13	4.43	5.37	5.45	5.21	5.82	5.40	5.48	4.93	4.20
		COP	1.21	1.52	1.89	1.86	2.16	2.49	2.61	2.48	3.07	3.26	3.43	3.99
	64.4°F (18°C)	TC	21.03	27.27	32.23	35.93	37.90	47.55	46.77	49.71	55.46	60.17	56.59	55.71
		Input	5.00	5.14	5.29	5.56	5.47	5.61	5.31	5.72	5.62	5.70	5.16	4.39
		COP	1.23	1.55	1.79	1.89	2.03	2.48	2.58	2.55	2.89	3.09	3.21	3.72
	69°F (20.5°C)	TC	21.36	27.76	31.52	35.38	36.91	45.68	45.87	50.60	54.40	58.94	56.11	54.67
		Input	4.90	5.01	5.52	5.75	5.68	5.68	5.46	5.56	5.81	5.89	5.39	4.55
		COP	1.28	1.62	1.67	1.80	1.90	2.36	2.46	2.67	2.74	2.93	3.05	3.52
	71.6°F (22°C)	TC	20.98	27.07	31.53	34.80	36.40	45.13	44.36	51.88	53.86	56.93	55.91	60.26
		Input	4.91	5.01	5.56	5.89	5.72	5.85	5.48	5.37	5.94	5.89	5.53	4.99
		COP	1.25	1.58	1.66	1.73	1.87	2.26	2.37	2.83	2.66	2.83	2.96	3.54
58K	59°F (15°C)	TC	28.06	29.83	31.60	32.39	33.37	35.73	36.82	39.27	42.54	51.16	60.49	66.41
		Input	3.17	3.63	4.08	4.28	4.53	5.14	5.08	4.96	4.80	4.70	4.67	4.62
		COP	2.59	2.41	2.27	2.22	2.16	2.04	2.12	2.32	2.60	3.19	3.80	4.21
	64.4°F (18°C)	TC	29.61	31.38	33.15	33.94	34.92	37.29	38.37	40.83	44.09	52.71	62.05	67.96
		Input	3.05	3.51	3.96	4.16	4.41	5.02	4.97	4.84	4.68	4.58	4.55	4.51
		COP	2.85	2.62	2.45	2.39	2.32	2.18	2.26	2.47	2.76	3.37	4.00	4.42
	69°F (20.5°C)	TC	30.94	32.71	34.48	35.26	36.25	38.61	39.70	42.15	45.42	54.04	63.37	69.29
		Input	2.95	3.41	3.86	4.06	4.31	4.92	4.86	4.74	4.58	4.48	4.45	4.41
		COP	3.07	2.81	2.62	2.55	2.47	2.30	2.39	2.61	2.91	3.54	4.17	4.60
	71.6°F (22°C)	TC	31.68	33.46	35.23	36.01	37.00	39.36	40.45	42.90	46.17	54.79	64.12	70.03
		Input	2.90	3.35	3.80	4.00	4.26	4.86	4.81	4.69	4.52	4.43	4.39	4.35
		COP	3.20	2.93	2.72	2.64	2.55	2.37	2.46	2.68	2.99	3.62	4.28	4.72

NOTE: Data highlighted in gray is extrapolated data, and not actual test data. At 77°F outdoor conditions, sweat protection activates causing a decrease in total capacity.

LEGEND:
DB --- Dry Bulb
TC --- Total Net Capacity (1000 Btu/hour)
Input --- Total Power (kW)
COP --- W/W

COOLING - FLOOR CEILING & CONSOLE

MODEL	COOLING Indoor Conditions DB	WB		OUTDOOR CONDITIONS (DB) (-22°F) (-25°C)	-13°F (-25°C)	-4°F (-20°C)	0°F (-17°C)	5°F (-15°C)	17°F (-8°C)	47°F (8°C)	77°F (25°C)	86°F (30°C)	95°F (35°C)	104°F (40°C)	113°F (45°C)	122°F (50°C)
36K	69.8°F (21°C)	59°F (15°C)	TC	39.20	38.11	37.02	36.54	35.93	35.93	32.13	30.43	31.19	28.54	24.66	17.78	16.34
			SC	29.71	28.88	28.06	25.71	25.38	25.42	23.45	22.55	22.87	21.63	19.75	16.13	15.06
			Input	2.68	2.88	3.07	3.16	3.27	2.56	1.34	2.51	3.41	3.53	3.14	2.33	2.55
	75.2°F (24°C)	62.6°F (17°C)	TC	41.40	40.31	39.22	38.74	38.13	38.13	34.34	32.64	33.40	30.74	26.86	19.98	18.55
			SC	31.45	30.62	29.79	29.42	28.96	28.96	26.08	24.79	25.37	23.35	20.40	15.18	14.09
			Input	2.74	2.94	3.13	3.22	3.33	2.62	1.40	2.58	3.47	3.59	3.20	2.39	2.61
	80.6°F (27°C)	66.2°F (19°C)	TC	43.64	42.55	41.46	40.98	40.37	40.37	36.57	34.87	35.63	32.98	29.10	22.22	20.78
			SC	32.84	32.02	31.20	30.84	30.38	30.38	27.52	26.24	26.81	24.82	21.90	16.72	15.64
			Input	2.80	3.00	3.20	3.28	3.39	2.68	1.47	2.64	3.53	3.65	3.26	2.45	2.67
	89.6°F (32°C)	73.4°F (23°C)	TC	47.97	46.88	45.79	45.30	44.70	44.70	40.90	39.20	39.96	37.30	33.43	26.54	25.11
			SC	33.31	32.56	31.80	31.47	31.05	31.04	28.41	27.23	27.75	25.91	23.22	18.44	17.44
			Input	2.92	3.12	3.32	3.40	3.51	2.80	1.59	2.76	3.65	3.77	3.38	2.57	2.79
48K	69.8°F (21°C)	59°F (15°C)	TC	36.82	37.54	38.26	38.58	38.99	42.49	44.56	46.09	43.65	40.64	32.07	26.61	21.82
			SC	28.37	28.93	29.48	30.37	30.57	32.30	33.00	33.78	32.65	31.32	27.23	24.64	21.82
			Input	5.29	4.11	2.93	2.41	1.75	1.67	2.42	4.56	4.95	5.06	3.57	3.28	3.10
	75.2°F (24°C)	62.6°F (17°C)	TC	39.15	39.87	40.59	40.91	41.31	44.82	46.88	48.42	45.98	42.97	34.40	28.94	24.14
			SC	30.35	30.90	31.46	31.71	32.02	34.74	36.35	37.53	35.64	33.31	26.66	22.43	18.72
			Input	5.35	4.17	2.99	2.47	1.82	1.74	2.48	4.62	5.01	5.13	3.63	3.34	3.16
	80.6°F (27°C)	66.2°F (19°C)	TC	41.95	42.67	43.39	43.71	44.12	47.62	49.69	51.22	48.78	45.77	37.20	31.74	26.95
			SC	32.26	32.81	33.37	33.61	33.92	36.62	38.21	39.39	37.51	35.20	28.61	24.41	20.72
			Input	5.43	4.25	3.07	2.55	1.90	1.82	2.56	4.70	5.09	5.21	3.71	3.42	3.24
	89.6°F (32°C)	73.4°F (23°C)	TC	47.67	48.39	49.11	49.43	49.83	53.34	55.41	56.94	54.50	51.49	42.92	37.46	32.67
			SC	36.82	37.38	37.94	38.19	38.50	41.20	42.80	43.99	42.10	39.78	33.16	28.94	25.24
			Input	5.60	4.42	3.24	2.72	2.06	1.98	2.72	4.87	5.26	5.37	3.88	3.59	3.40
58K	69.8°F (21°C)	59°F (15°C)	TC	61.16	59.66	58.17	62.05	53.68	52.12	49.68	45.80	43.17	42.95	40.51	37.34	37.33
			SC	20.14	19.65	19.16	16.15	14.60	13.46	15.90	14.66	14.06	14.15	14.83	15.37	15.64
			Input	2.54	2.67	2.80	3.44	3.13	2.69	2.79	3.85	4.14	4.34	4.52	4.58	4.64
	75.2°F (24°C)	62.6°F (17°C)	TC	65.06	63.57	62.07	65.95	57.58	56.02	53.58	49.71	47.07	46.86	44.41	41.24	41.23
			SC	53.41	52.19	50.96	54.14	47.27	45.99	43.99	40.81	38.65	38.47	36.46	33.86	33.85
			Input	3.16	3.29	3.42	4.06	3.75	3.31	3.41	4.47	4.76	4.96	5.14	5.20	5.26
	80.6°F (27°C)	66.2°F (19°C)	TC	69.60	68.11	66.61	70.49	62.12	60.56	58.12	54.25	51.61	51.40	48.95	45.78	45.77
			SC	53.54	52.39	51.24	54.22	47.78	46.58	44.71	41.73	39.70	39.54	37.65	35.22	35.21
			Input	3.75	3.88	4.01	4.66	4.34	3.90	4.00	5.06	5.35	5.55	5.74	5.80	5.85
	89.6°F (32°C)	73.4°F (23°C)	TC	78.88	77.38	75.89	79.77	71.40	69.84	67.40	63.52	60.89	60.67	58.23	55.06	55.05
			SC	60.68	59.52	58.38	61.36	54.92	53.72	51.85	48.86	46.84	46.67	44.79	42.35	42.35
			Input	4.92	5.04	5.17	5.82	5.50	5.06	5.16	6.23	6.51	6.71	6.90	6.96	7.02

NOTE: Data highlighted in gray is interpolated data and not actual test data. At 77°F outdoor conditions sweat protection activates causing a decrease in total capacity.

LEGEND
DB --- Dry Bulb
WB --- Wet Bulb
TC --- Total Net Colling Capacity (kBTU/Hr)
SC --- Sensible Capacity (kBTU/Hr)
Input --- Total Power (kW)

HEATING - FLOOR CEILING & CONSOLE

MODEL	HEATING		OUTDOOR CONDITIONS (DB)											
	Indoor Conditions DB		-22°F (-30°C)	-13°F (-25°C)	-4°F (-20°C)	0°F (-17°C)	5°F (-15°C)	17°F (-8°C)	19.4°F (-7°C)	24.8°F (-4°C)	32°F (0°C)	39.2°F (4°C)	44.6°F (7°C)	53.6°F (12°C)
36K	59°F (15°C)	TC	10.96	18.65	23.62	25.76	26.80	32.63	31.35	31.63	35.95	38.68	37.63	43.42
		Input	3.10	3.61	3.87	4.03	4.02	3.96	3.94	4.16	4.04	3.92	3.75	3.65
		COP	1.04	1.51	1.79	1.87	1.95	2.41	2.33	2.23	2.61	2.89	2.94	3.49
	64.4°F (18°C)	TC	13.52	21.21	26.17	28.31	29.36	35.19	33.91	34.18	38.50	41.24	40.19	45.97
		Input	3.46	3.98	4.23	4.39	4.38	4.32	4.30	4.52	4.40	4.28	4.11	4.01
		COP	1.15	1.56	1.81	1.89	1.96	2.39	2.31	2.22	2.56	2.82	2.87	3.36
	69°F (20.5°C)	TC	13.09	20.78	25.74	27.89	28.93	34.76	33.48	33.75	38.07	40.81	42.36	45.55
		Input	3.10	3.61	3.87	4.03	4.02	3.96	3.94	4.16	4.04	3.92	3.75	3.65
		COP	1.24	1.69	1.95	2.03	2.11	2.57	2.49	2.38	2.76	3.05	3.31	3.66
	71.6°F (22°C)	TC	16.92	24.61	29.58	31.72	32.76	38.59	37.31	37.59	41.90	44.64	43.59	49.38
		Input	3.94	4.46	4.71	4.87	4.86	4.80	4.78	5.00	4.88	4.76	4.59	4.49
		COP	1.26	1.62	1.84	1.91	1.98	2.36	2.29	2.20	2.52	2.75	2.78	3.22
48K	59°F (15°C)	TC	15.94	18.36	26.93	34.79	37.24	45.50	47.21	51.31	53.56	55.66	58.30	57.70
		Input	3.84	3.98	4.45	4.94	5.11	5.16	5.34	5.78	5.59	5.33	4.99	4.24
		COP	1.22	1.35	1.77	2.06	2.14	2.58	2.59	2.60	2.81	3.06	3.42	3.99
	64.4°F (18°C)	TC	18.42	20.84	29.42	37.27	39.72	47.98	49.69	53.79	56.05	58.14	60.78	60.18
		Input	3.99	4.13	4.59	5.09	5.25	5.31	5.49	5.93	5.74	5.48	5.14	4.39
		COP	1.35	1.48	1.88	2.15	2.22	2.65	2.65	2.66	2.86	3.11	3.47	4.02
	69°F (20.5°C)	TC	20.53	22.95	31.53	39.39	41.83	50.10	51.81	55.91	58.16	60.26	62.89	53.01
		Input	4.11	4.26	4.72	5.22	5.38	5.44	5.62	6.06	5.87	5.61	5.27	4.50
		COP	1.46	1.58	1.96	2.21	2.28	2.70	2.70	2.70	2.90	3.15	3.50	3.45
	71.°6F (22°C)	TC	21.73	24.15	32.73	40.58	43.03	51.29	53.00	57.10	59.36	61.45	64.09	63.49
		Input	4.19	4.33	4.79	5.29	5.45	5.51	5.69	6.13	5.94	5.68	5.34	4.59
		COP	1.52	1.63	2.00	2.25	2.31	2.73	2.73	2.73	2.93	3.17	3.52	4.05
58K	59°F (15°C)	TC	22.49	25.55	28.61	29.97	31.66	35.74	35.44	34.78	33.89	43.31	55.90	64.13
		Input	4.35	4.45	4.56	4.61	4.67	4.81	4.77	4.67	4.55	4.82	5.24	5.51
		COP	1.52	1.68	1.84	1.91	1.99	2.18	2.18	2.18	2.18	2.63	3.13	3.41
	64.4°F (18°C)	TC	24.97	28.03	31.09	32.45	34.15	38.22	37.93	37.26	36.37	45.79	58.38	66.61
		Input	4.57	4.68	4.79	4.84	4.90	5.04	5.00	4.90	4.78	5.05	5.47	5.74
		COP	1.60	1.76	1.90	1.96	2.04	2.22	2.22	2.23	2.23	2.66	3.13	3.40
	69°F (20.5°C)	TC	27.09	30.14	33.20	34.56	36.26	40.34	40.04	39.37	38.48	47.91	60.50	68.72
		Input	4.35	4.45	4.56	4.61	4.67	4.81	4.77	4.67	4.55	4.82	5.24	5.51
		COP	1.83	1.99	2.13	2.20	2.28	2.46	2.46	2.47	2.48	2.91	3.38	3.66
	71.6°F (22°C)	TC	22.06	25.12	28.18	29.53	31.23	35.31	35.01	34.35	33.46	42.88	55.47	63.70
		Input	4.88	4.99	5.09	5.14	5.20	5.34	5.30	5.21	5.08	5.35	5.77	6.04
		COP	1.32	1.48	1.62	1.68	1.76	1.94	1.94	1.93	1.93	2.35	2.82	3.09

NOTE: Data highlighted in gray is interpolated data and not actual test data. At 77°F outdoor conditions sweat protection activates causing a decrease in total capacity

LEGEND
DB --- Dry Bulb
TH --- Total Net Heating Capacity (kBTU/Hr)
COP --- (W/W)
Input --- Total Power (kW)

APPLICATION DATA

UNIT SELECTION

Select equipment that either matches or supports slightly more than the anticipated peak load. This provides better humidity control, fewer unit cycles, and less part−load operation.

For units used in spaces with high sensible loads, base equipment selection on unit sensible load, not on total anticipated load. Adjust for anticipated room wet bulb temperature to avoid undersizing the equipment.

UNIT MOUNTING (OUTDOOR)

Refer to the unit's installation instructions for further details.

Unit leveling − For reliable operation, the units should be level in all planes.

Clearance − Minimum clearance (see Fig. 6 — on page 15) must be provided for airflow and service. The condensing units are designed for free−flow
application. Air inlets and outlets should not be restricted.

Unit location − A location which is convenient to installation and not exposed to strong winds. A location that can bear the weight of the outdoor unit and where the outdoor unit can be mounted in a level position.

Do not install the indoor or outdoor units in a location with special environmental conditions. For those applications, contact your sales representative.

SYSTEM OPERATING CONDITIONS

Refer to the Specifications table (Table 3 on page 5) for operating range.

METERING DEVICES

The outdoor unit has an electronic expansion valve to manage the refrigerant flow of the connected fan coil.

DRAIN CONNECTIONS

Install the drains in accordance with the local sanitation codes.

REFRIGERANT LINES

General refrigerant line sizing:

1. The outdoor units are shipped with a full charge of R410A refrigerant. All charges, line sizing, and capacities are based on runs of 25 ft. (7.6 m).
2. Refrigerant lines should not be buried in the ground. If it is necessary to bury the lines, do not bury the lines more than 36−in (914 mm). Provide a minimum 6−in (152 mm) vertical rise to the service valves to prevent refrigerant migration.
3. Both lines must be insulated. Use a minimum of 1/2−in. (12.7 mm) thick insulation. Closed−cell insulation is recommended in all applications.
4. Special consideration should be given to isolating the interconnecting tubing from the building structure. Isolate the tubing so vibration or noise is not transmitted into the structure.

Long Line Applications:

1. No change in line sizing is required.
2. Add refrigerant per the Additional Charge requirements in Table 3 on page 5.

Manufacturer reserves the right to change, at any time, specifications and designs without notice and without obligations.

WIRING

All wires must be sized per NEC (National Electrical Code) or CEC (Canadian Electrical Code) and local codes. Use Electrical Data table MCA (minimum circuit amps) and MOCP (maximum over current protection) to correctly size the wires and the disconnect fuse or breakers respectively.

SIZES 36-48 RECOMMENDED CONNECTION METHOD FOR POWER AND COMMUNICATION WIRING

Power and Communication Wiring: The main power is supplied to the outdoor unit. The field supplied power wiring from the outdoor unit to the indoor unit consists of three (3) wires and provides the power for the indoor unit. Two wires are high voltage AC power and one is a ground wire. To minimize voltage drop, the factory recommended wire size is 14/2 stranded with a ground.

Communication Wiring: A separate shielded stranded copper conductor only, with a 600 volt rating and double insulated copper wire, must be used as the communication wire from the outdoor unit to the indoor unit.

NOTE: Use a separate shielded 16GA stranded control wire.

Table 20 — Wiring Sizes 36K-58K

CABLE	CABLE SIZE	REMARKS
Power Connection Cable	14AWG	2 wire + Ground 1Φ 208/230 V
Communication Cable	16AWG	2 wire stranded shielded control wire

WARNING

EQUIPMENT DAMAGE HAZARD
Failure to follow this caution may result in equipment damage or improper operation. Wires should be sized based on NEC and local codes.

CAUTION

EQUIPMENT DAMAGE HAZARD
Failure to follow this caution may result in equipment damage or improper operation. Be sure to comply with local codes while running wire from the indoor unit to the outdoor unit. Every wire must be connected firmly. Loose wiring may cause the terminal to overheat or result in unit malfunction. A fire hazard may also exist. Ensure all wiring is tightly connected.
No wire should touch the refrigerant tubing, compressor or any moving parts. Disconnecting means must be provided and shall be located within sight and readily accessible from the air conditioner. Connecting cable with conduit shall be routed through the hole in the conduit panel.

NOTE: The main power is supplied to the outdoor unit. When disconnecting the power of the outdoor unit, the indoor unit would lose power. A disconnect switch is not required on the Indoor unit side on the wiring between the Outdoor and Indoor unit. A 3 pole disconnect may be used for extra protection between the Indoor and Outdoor Unit. A separate power is required for an Auxiliary Electric Heater.

Manufacturer reserves the right to change, at any time, specifications and designs without notice and without obligations.

SOUND PRESSURE IN OCTAVE BANDS

Table 21 — Sound Pressure in Octave Bands

SIZE	FREQUENCY (RPM)	63	125	250	500	1000	2000	4000	8000
36K	Cooling dB(A)	51.3	59.2	56.3	51.3	49.4	46.8	42.6	35.7
	Heating dB(A)	53.8	62.3	60.8	53.7	52.0	48.4	45.8	37.8
48K	Cooling dB(A)	59.2	61.6	55.9	58.1	59.6	51.9	47.8	43.8
	Heating dB(A)	65.1	66.1	61.3	59.7	58.2	54.1	47.5	43.6
58K	Cooling dB(A)	44.9	50.5	53.1	58.1	57.3	53.9	47.5	44.0
	Heating dB(A)	43.7	47.7	52.2	56.3	56.4	54.3	47.7	44.2

OUTDOOR UNIT SOUND PRESSURE TEST CONDITIONS

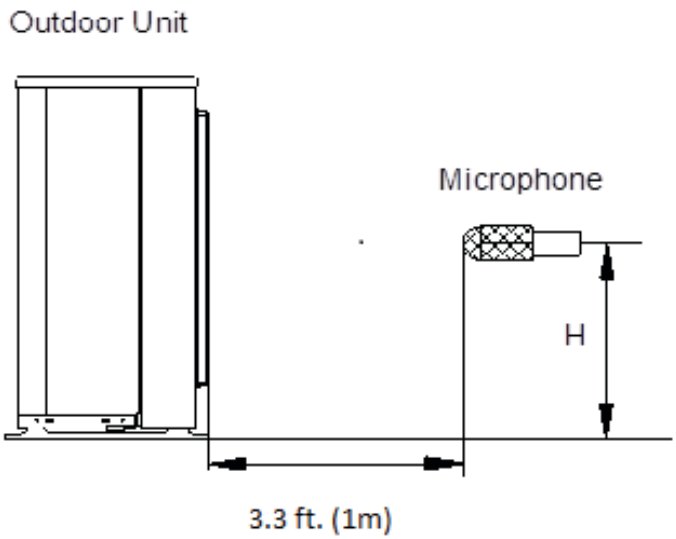

Fig. 8 — Outdoor Unit Sound Pressure Test Conditions

NOTE: H=0.5 x Height of outdoor unit

Table 22 — Outdoor Unit Sound Pressure Test Conditions

	INDOOR CONDITION		OUTDOOR CONDITION	
	DB	WB	DB	WB
COOLING	80.6°F (27°C)	66.2°F (19°C)	95°F (35°C)	75.2°F (24°C)
HEATING	68°F (20°C)	59°F (15°C)	44.6°F (7°C)	42.8°F (6°C)

FAN AND MOTOR SPECIFICATIONS

Table 23 — Fan and Motor Specifications

SYSTEM SIZE			36K	48K	58K
OUTDOOR FAN PROPELLER	Material	--	Acrylonitrile Styrene +20%GF		
	Type	--	ZL-560*139*12-3KN	ZL-554*148*12-3KFN	ZL-554*148*12-3KFN
	Diameter	In (mm)	22.05(560)	21.81(554)	21.81(554)
	Height	In (mm)	5.47(139)	5.83(148)	5.83(148)
OUTDOOR FAN MOTOR	Model	--	WZDK120-38G-W	ZKFN-85-8-22	ZKFN-85-8-22-5
	Type	--	DC	DC	DC
	Phase	--	1	1	1
	FLA	A	1.21	1.17	1.5
	Insulation Class	--	E	E	E
	Safe Class	--	IPX0	IPX0	IPX4
	Input	W	150	126	126
	Output	W	120	85	85
	Range of current	A	1.21±10%	1.17±10%	1.036±10%
	Rated current	A	1.21	1.17	1.036
	Rated HP	HP	0.16	0.14	0.11
	Speed	rev/min	850/800/750	900/850/750	850/750/650
	Rated RPM	rev/min	1050	900	900
	Max. input	W	150	126	126

Manufacturer reserves the right to change, at any time, specifications and designs without notice and without obligations.

WIRING DIAGRAMS

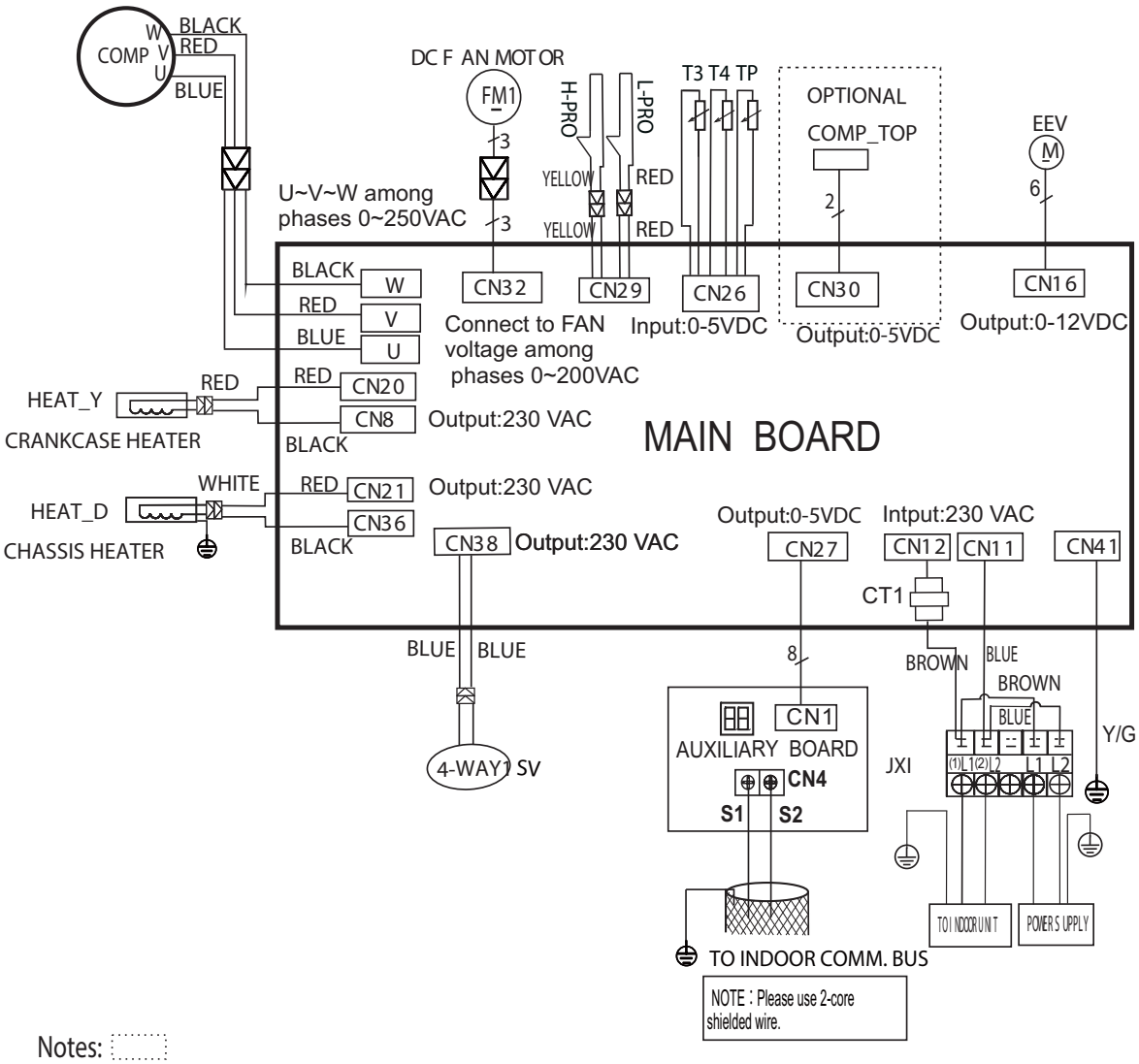

Notes:
COMPONENT IN DASH LINE IS OPTIONAL OR FIELD WIRING

Fig. 9 — Wiring Diagram Size 36K

Table 24 — Wiring Diagram 36K

CODE	PART NAME
JX1	Terminal Block
COMP_TOP	Compressor Overload Protection Temp. Sensor
EEV	Electric Expansive Valve
FM1	DC Fan Motor
COMP	Compressor
HEAT_Y	Crankcase Heater
CT1	AC Current Detector
H-PRO	High Pressure Switch
L-PRO	Low Pressure Switch
SV	Reserve Valve
TP	COMP. Discharge TEMP. Sensor
T3	COIL TEMP. Sensor
T4	Outdoor Ambient TEMP. Sensor
HEAT_D	Chassis Heater

Manufacturer reserves the right to change, at any time, specifications and designs without notice and without obligations.

WIRING DIAGRAMS (CONT)

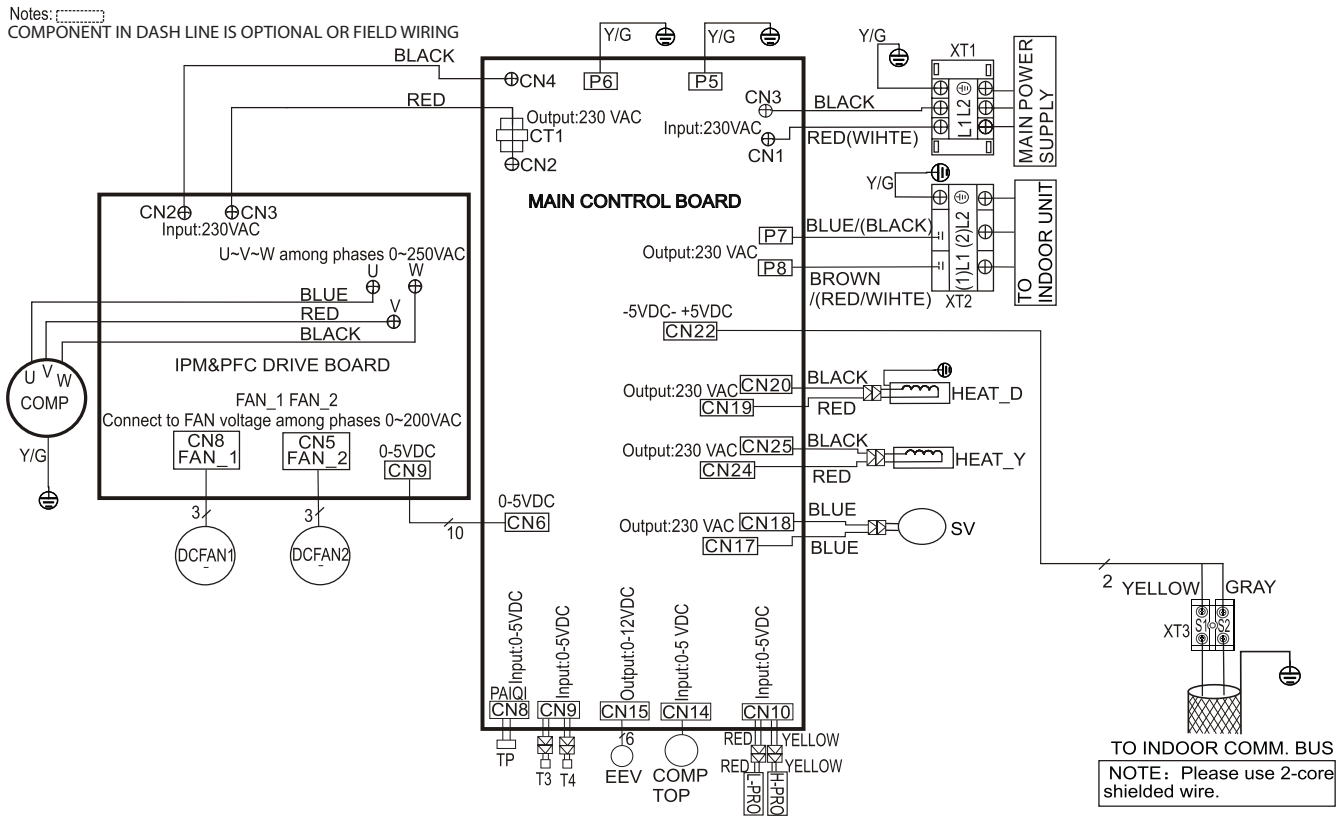

Fig. 10 — Wiring Diagram Sizes 48K - 58K

Table 25 — Wiring Diagram Sizes 48K - 58K

CODE	PART NAME
COMP	Compressor
CTI	AC Current Detector
EEV	Electronic Expansion Valve
DCFAN1	Outdoor DC Fan Motor
DCFAN2	
HEAT_D	Chassis Heater
HEAT_Y	Crankcase Heater
H-PRO	High Pressure Switch
L-PRO	Low Pressure Switch
SV	Reverse Valve
TP	Comp. Discharge Temp Sensor
T3	Coil Temp. Sensor
T4	Outdoor Ambient Temp Sensor
COMP TOP	Compressor Overload Protection Temp. Sensor

GUIDE SPECIFICATIONS

HORIZONTAL DISCHARGE OUTDOOR UNITS

Size Range: 3 to 5 Ton Nominal Cooling and Heating Capacity
Model Number: **38MBRC**

Part 1 - General

1.01 System Description

a. Outdoor air-cooled split system compressor sections suitable for on-the-ground, rooftop, wall hung or balcony mounting. Units consist of a rotary compressor, an air-cooled coil, propeller-type draw-through outdoor fan, reversing valve (HP), accumulator (HP units), metering device(s), and a control box. Units discharge air horizontally as shown on the contract drawings. Units function as the outdoor component of an air-to-air heat pump system.
b. Units are to be used in a refrigeration circuit matched to ductless heat pump fan coil units.

1.02 Agency Listings

a. Unit construction complies with ANSI/AHRI 210/240, latest revision, and with the NEC.
b. Units are evaluated in accordance with the UL standard 60335-2-40/ CSA C22.2 No. 60335-2-40.
c. Units are listed in CEC directory.
d. Unit cabinet is capable of withstanding the 500-hour salt spray test per Federal Test Standard no. 141 (method 6061).
e. Air-cooled condenser coils are leak tested at 550 psig.

1.03 Delivery, Storage, And Handling

Units are shipped in one piece and are stored and handled per the manufacturer's recommendations.

1.04 Warranty (For Inclusion By Specifying Engineer)

Part 2 - Products

2.01 Equipment

1. General:
   Factory assembled, single piece, air-cooled outdoor unit. Contained within the enclosure are the factory wiring, piping, controls, and the compressor.
2. **Unit Cabinet:**
   a. The unit cabinet is constructed of galvanized steel, bonderized and coated with baked-enamel finish on the inside and outside.
   b. The unit access panels are removable and provide full access to the compressor, fan, and the control components.
   c. The outdoor compartment is isolated and has an acoustic lining to assure a quiet operation.
3. **Fans:**
   a. The outdoor fans are direct-drive propeller type, and discharge air horizontally. The fan draws air through the outdoor coil.
   b. Outdoor fan motors are totally-enclosed, single phase motors with class E insulation and permanently lubricated ball bearings. The motor is protected by internal thermal overload protection.
   c. The shaft has an inherent corrosion resistance.
   d. Fan blades are non-metallic and statically and dynamically balanced.
   e. Outdoor fan openings are equipped with a PVC metal/mesh coated protection grille over the fan.
4. **Compressor:**
   a. The compressor is the fully hermetic variable speed rotary type.
   b. The compressor is equipped with an oil system, operating oil charge, and motor.
   c. The motor is NEMA rated class E, suitable for operation in a refrigerant atmosphere.
   d. The compressor assembly is installed on rubber vibration isolators.
5. **Outdoor Coil:**
   The coil is constructed of aluminum hydrophilic pre-coated fins mechanically bonded to seamless copper tubes, which are cleaned, dehydrated and sealed.
6. **Refrigerant Components:**
   Refrigerant circuit components include multiple brass external liquid line service valves with a service gauge connection port, multiple suction line service valves with a service gage connection port, accumulator, reversing valve, and electronic expansion valves.
7. **Safeties:**
   Operating safeties are factory selected, assembled, and tested. The minimum functions include the following:
   a. Compressor discharge over temperature protection.
   b. System low voltage protection.
   c. Compressor overload protection.
   d. Compressor over current protection.
   e. IPM module protection.
8. **Electrical Requirements:**
   a. Units operate on single-phase, 60 Hz power at 208/230v.
   b. The unit electrical power is a single point connection.
   c. All power and control wiring must be installed per NEC and all local electrical codes.
   d. Units have multiple terminal blocks to connect to multiple indoor units.

© 2024 Carrier. All rights reserved.

Manufacturer reserves the right to change, at any time, specifications and designs without notice and without obligations.