PA4Z
Single-Packaged Air Conditioner System with R-410A Refrigerant Single Phase 2 to 5 Nominal Tons (Sizes 024-060)

Product Data

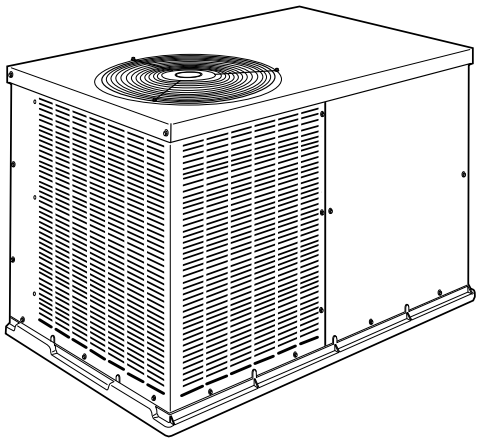

PA4Z 024-048

A10165

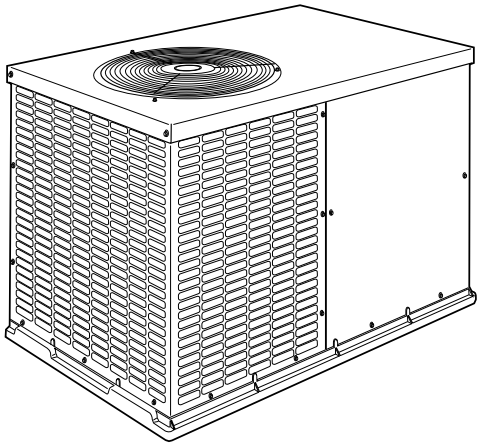

PA4Z 060

A150067

Fig. 1 – Unit PA4Z

Features/Benefits

This unit is a packaged air conditioner for manufactured housing, residential, and light commercial applications. The unit design is the result of our firm commitment to the development of the finest air conditioners that modern technology can offer.

The unit is built in one basic cabinet size and features a round or rectangular side-by-side duct configuration.

FACTORY-ASSEMBLED PACKAGE is a compact, fully self-contained, electric cooling unit with horizontal supply and return ducts. The unit is available in a variety of standard cooling sizes to meet residential and light commercial requirements. Unit installs easily on a ground level pad.

EASY TO INSTALL - The unit is small, compact, and easy to handle. Every unit has an identical 32 x 51-in. (813 x 1295 mm) footprint to make planning simple. The concise design uses less sheet metal and makes the unit lighter than other units. The unit can be easily positioned on the job site with the hand holds built into the unit basepan.

AERODYNAMIC FAN BLADE DESIGN reduces the overall sound now as low as 71dBA.

SERVICE ACCESS makes installation and maintenance quicker and easier. This unit is designed to be serviced from both the side and front. The design allows easy access for installation and maintenance procedures on the unit. Routine maintenance tasks such as coil cleaning are sped up with the multiple access side panels.

NO-RUST BASEPAN WITH INTEGRATED DRAIN PAN is standard on all units. The unit features a tough, hightech, composite material basepan with integrated drain pan. The composite material eliminates the potential problems of rust and premature replacement which are common with standard metal basepans.

DURABLE PRE-PAINTED STEEL CABINET protects against harsh weather. The watertight construction and corrosion- resistant finish will keep it looking like new for years. The paint treatment process ensures quality protection against the elements. A compact, low-profile design utilizes a louvered coil enclosure for protection against vandalism and hail damage.

INDOOR AIR QUALITY is designed into the unit. A sloped drain pan minimizes the amount of standing water inside the unit, which limits mold and mildew growth. The drain pan is made of a rust-proof material and will not deteriorate or release foreign matter into the airstream.

LIGHTWEIGHT, COMPACT CONSTRUCTION is ideal for manufactured housing and residential applications. This unit is one of the lightest, most compact packaged units ever designed. It's light weight (230 lb [104 kg] for the 024 size) makes the unit easier to handle. The low height keeps ductwork connections to a minimum and makes units less visible.

This unit utilizes a structural beam design to form the four sides of the cabinet. Only 12 different pieces of sheet metal are used in the unit construction to simplify the unit for greater reliability.

EFFICIENT, DEPENDABLE PERFORMANCE with durable compressors designed for efficiency. The unit offers up to 13.4 SEER2 (Seasonal Energy Efficiency Ratio) cooling performance efficiencies. This performance level can reduce cooling expenses by as much as 30% compared to older cooling equipment.

DURABLE, DEPENDABLE, COMPRESSORS are designed for high efficiency. Each compressor is hermetically sealed against contamination to help promote longer life and dependable operation. Vibration isolation provides quiet operation. Compressors have internal overcurrent protection.

DIRECT-DRIVE MULTISPEED, BLOWER MOTOR is standard on all models. It's high efficiency design ensures high performance with most duct systems.

DIRECT-DRIVE, PSC CONDENSER-FAN MOTORS are designed to help reduce energy consumption and provide for cooling operation down to 40°F (4.4°C).

REFRIGERANT SYSTEM is designed to provide dependability. Liquid refrigerant filter driers are used to promote clean, unrestricted operation. Each unit leaves the factory with a full refrigerant charge. Refrigerant service connections make checking operating pressures easier.

AIR HANDLING LEAKAGE —Cabinet air leakage less than 2.0% at 1.0 in. W.C. and cabinet air leakage less than 1.4% at 0.5 in W.C. when tested in accordance with ASHRAE standard 193

ACCESSORY ELECTRIC HEATERS — A variety of accessory electric heaters are available. These heaters are comprised of a separate heater module mounted on the blower inlet and remote mounted controls located in the unit control box. Single point electrical connections are available for powering both the heater and the unit.

Limited Warranty*

- Default 5 year parts limited warranty
  - -10 year parts limited warranty with timely registration. Equipment must be registered within 90 days of original installation, except in jurisdictions where warranty benefits cannot be conditioned on registration.

* Applies to original purchaser/homeowner and 5 years to subsequent owners.

- Default 5 year on compressor limited warranty
  - -10-year on compressor limited warranty with timely registration. Equipment must be registered within 90 days of original installation, except in jurisdictions where warranty benefits cannot be conditioned on registration.

* Applies to original purchaser/homeowner and 5 years to subsequent owners. See warranty certificate for complete details and restrictions

Table of Contents

Features/Benefits 1
Model Nomenclature 2
AHRI Capacity Ratings 3
A-Weighted Sound Power Level (dBA) 3
Accessories 4
Dimensional Drawing 5
Dimensional Drawings 6
Dimensional Drawings 7
Selection Procedure 8
Typical Connection Wiring Schematic 14
Operating Sequence 17
Application Data 17
Guide Specifications 18

Model Nomenclature

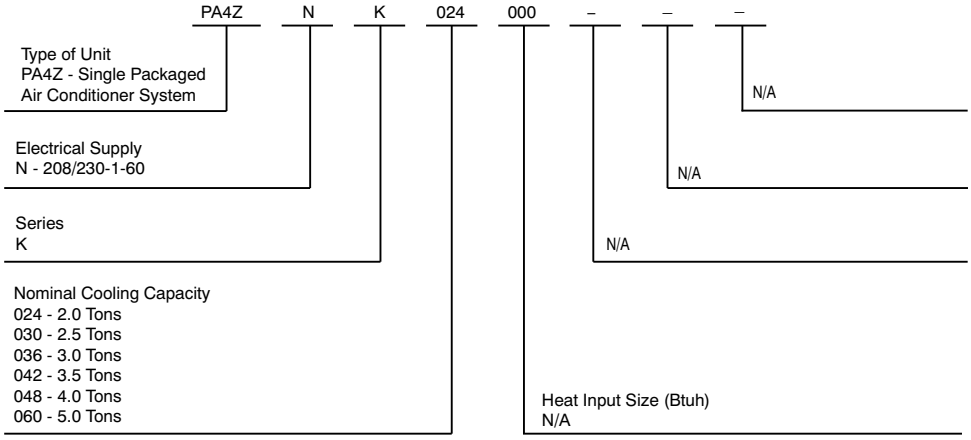

Use of the AHRI Certified TM Mark indicates a manufacturer's participation in the program For verification of certification for individual products, go to www.ahridirectory.org.

SAP ORDERING NO.	NOMINAL COOLING CAPACITY (Btuh)	VOLTS-PHASE (60 HZ)	APPROX SHIP WT (LB)
PA4ZNK024000	24,000	208/230-1-60	286
PA4ZNK030000	30,000	208/230-1-60	298
PA4ZNK036000	36,000	208/230-1-60	329
PA4ZNK042000	42,000	208/230-1-60	352
PA4ZNK048000	48,000	208/230-1-60	368
PA4ZNK060000	60,000	208/230-1-60	402

AHRI* Capacity Ratings

Cooling Capacities and Efficiencies

UNIT SIZE	NOMINAL TONS	STANDARD CFM	Ratings in accordance with U.S. Government DOE (Department of Energy) Appendix M test procedures and/or AHRI Standards 210/240			Ratings in accordance with U.S. Government DOE (Department of Energy) Appendix M1 test procedures and/or AHRI Standards 210/240		
			NET COOLING CAPACITY (Btuh)†	EER†	SEER	NET COOLING CAPACITY (Btuh)†	EER2†	SEER2
24	2	800	23,600	12.0	14.0	23,200	11.05	13.4
30	2.5	1000	28,000	11.5	14.0	28,000	11.05	13.4
36	3	1200	34,400	11.5	14.0	33,600	11.05	13.4
42	3.5	1400	41,500	12.0	14.5	40,500	11.05	13.4
48	4	1600	47,500	12.0	14.2	45,500	11.05	13.4
60	5	1850	54,000	11.5	14.0	53,500	11.05	13.4

*. Air Conditioning Heating & Refrigeration Institute
†. At "A" conditions -- 80°F (26.7°C) indoor db / 67°F (19.4°C) indoor wb & 95°F (35°C) outdoor db.
EER - Energy Efficiency Ratio
SEER - Seasonal Energy Efficiency Ratio
Notes:
1. Ratings are net values, reflecting the effects of circulating fan heat.
2. Before purchasing this appliance, read important energy cost and efficiency information available from your retailer.

A-Weighted Sound Power Level (dBA)

UNIT SIZE	STANDARD RATING (dBA*)	TYPICAL OCTAVE BAND SPECTRUM (dBA without tone adjustment)						
		125	250	500	1000	2000	4000	8000
024	71	51.7	55.2	58.2	62.0	55.6	49.4	44.0
030	73	60.4	56.6	61.7	64.0	57.4	54.9	46.4
036	75	57.7	61.6	63.9	65.5	60.0	54.4	49.5
042	77	64.8	68.3	72.9	72.2	68.2	62.6	53.1
048	76	58.4	61.9	65.3	65.5	59.7	55.0	47.4
060	80	72.9	65.4	68.8	70.5	65.2	60.5	50.9

*. dBA - Sound Power Levels (decibels A-weighting)
NOTE: Tested in compliance with AHRI 270 but not listed with AHRI.

Physical Data

UNIT SIZE	024	030	036	042	048	060
NOMINAL CAPACITY (ton)	2	2.5	3	3.5	4	5
SHIPPING WEIGHT (lb)	286	298	329	352	368	402
(kg)	130	136	150	160	167	183
COMPRESSOR TYPE	SCROLL					
REFRIGERANT	R-410A					
REFRIGERANT QUANTITY (lb)	3.6	4.0	5.25	5.8	7.825	8.0
(kg)	1.63	1.8	2.38	2.63	3.55	3.63
METERING DEVICE ID	Piston					TXV
ORIFICE OD (in.)	0.057	0.063	0.067	0.076	0.080	N/A
(mm)	1.45	1.60	1.70	1.93	2.03	
OUTDOOR COIL						
ROWS...FINS/in.	1...20	1...20	2...20	2...20	2...20	2...20
FACE AREA (sq. ft)	9.1	9.1	9.1	10.2	13.0	15.5
OUTDOOR FAN						
NOMINAL AIRFLOW (CFM)	2400	2400	2700	2700	2700	3000
DIAMETER (in.)	20	20	20	20	20	20
DIAMETER (mm)	508	508	508	508	508	508
MOTOR HP (RPM)	1/8 (825)	1/8 (825)	1/4 (1100)	1/4 (1100)	1/4 (1100)	1/3 (1110)
INDOOR COIL						
ROWS...FINS/in.	2...12	3...15	3...12	3...12	3...15	3...15
FACE AREA (sq. ft)	4.3	4.3	4.3	4.9	4.9	6.1
INDOOR BLOWER						
NOMINAL COOLING AIRFLOW (CFM)	800	1000	1200	1400	1600	1850
NOMINAL SIZE W x D (in.)	8 x 11	8 x 11	9 x 12	9 x 12	11 x 12	11 x 12
(mm)	254 x 203	254 x 203	279 x 229	279 x 229	279 x 229	267 x 305
MOTOR (HP)	1/3	1/2	1/2	1/2	3/4	1
HIGH-PRESSURE SWITCH (psig)						
CUTOUT	650 +/- 15					
RESET (AUTO)	420 +/- 25					
RETURN-AIR FILTERS*						
THROWAWAY (in.)	20x20x1	20x24x1	24x30x1		24x36x1	
(mm)	508x508x25	508x610x25	610x762x25		610x914x25	

*. *Required filter sizes shown are based on the AHRI (Air Conditioning, Heating and Refrigeration Institute) rated airflow at a velocity of 300 ft/min for throwaway type or 450 ft/min for high capacity type. Recommended filters are 1-in. (25.4 mm) thick.

Manufacturer reserves the right to change, at any time, specifications and designs without notice and without obligations.

Accessories

DESCRIPTION	USED WITH	PART NUMBER	PRICE
Low Ambient Control	All	CPLOWAMB001A00	
Compressor Start Kit	All	CPHSTART002A00	
240V Crankcase Heater	024-036	CPCRKHTR008A00	
	042-060	CPCRKHTR004A00	

Accessory Electric Heaters

CATALOG ORDERING NO.	NOMINAL CAPACITY (kW)	USED WITH SIZES							
		CIRCUIT BREAKER (Yes/No)	STAGES	024	030	036	042	048	060
ELECTRIC HEATERS (208/230-SINGLE PHASE-60Hz)									
CPHEATER125A0*	3.8 / 5.0	No	1	✓	✓	✓	✓	✓	✓
CPHEATER126A0*	3.8 / 5.0	Yes	1	✓	✓	✓	✓	✓	✓
CPHEATER127A0*	5.6 / 7.5	No	2	✓	✓	✓	✓	✓	✓
CPHEATER128A0*	5.6 / 7.5	Yes	2	✓	✓	✓	✓	✓	✓
CPHEATER129A0*	7.5 / 10.0	No	2	✓	✓	✓	✓	✓	
CPHEATER130A0*	7.5 / 10.0	Yes	2	✓	✓	✓	✓	✓	✓
CPHEATER131A0*	11.3 / 15.0	Yes	2			✓	✓	✓	✓
CPHEATER132A0*	15.0 / 20.0	Yes	2					✓	✓

✓=Approved combination

Multiplication Factors

HEATER kW RATING	VOLTAGE DISTRIBUTION	MULTIPLICATION FACTOR
240	200	.69
	208	.75
	230	.92
	240	1.00

Example: 15.0 kW (at 240v) heater on 208v
= 15.0 (.75 mult factor)
= 11.25 capacity at 208v

Manufacturer reserves the right to change, at any time, specifications and designs without notice and without obligations.

Dimensional Drawing

024-036

REQUIRED CLEARANCES TO COMBUSTIBLE MATL. INCHES [MM]

TOP OF UNIT.....0
BOTTOM OF UNIT.....0
SIDE OF UNIT WITH DUCT OPENINGS.....0
SIDE OF UNIT OPPOSITE DUCT OPENINGS.....0

NEC. REQUIRED CLEARANCES. INCHES [MM]

BETWEEN UNITS, POWER ENTRY SIDE.....42.0 [1067]
UNIT AND UNGROUNDED SURFACES, POWER ENTRY SIDE.....36.0 [914]
UNIT AND BLOCK OR CONCRETE WALLS AND OTHER GROUNDED SURFACES, POWER ENTRY SIDE.....42.0 [1067]

REQUIRED CLEARANCE FOR SERVICING INCHES [MM]

TOP OF UNIT.....36.0 [914]
SIDE OF UNIT OPPOSITE DUCT OPENINGS.....30.0 [762]
SIDE OF UNIT WITH POWER ENTRY.....30.0 [762]
(EXCEPT FOR NEC REQUIREMENTS)

NOTE: CLEARANCES MUST BE MAINTAINED TO PREVENT RECIRCULATION OF AIR FROM OUTDOOR FAN DISCHARGE. A REMOVABLE FENCE OR BARRICADE REQUIRES NO CLEARANCE.

DIMENSIONS IN [] ARE IN MM

UNIT	ELECTRICAL CHARACTERISTICS	UNIT WT.		UNIT HEIGHT	CENTER OF GRAVITY IN [MM]		
		LBS.	KG.	A	X	Y	Z
PA4ZNK024000	208/230-1-60	217	98	30-1/8 [765]	14 [356]	19 [483]	14 [356]
PA4ZNK030000	208/230-1-60	234	106	30-1/8 [765]	14 [356]	19 [483]	14 [356]
PA4ZNK036000	208/230-1-60	255	116	30-1/8 [765]	14 [356]	19 [483]	14 [356]

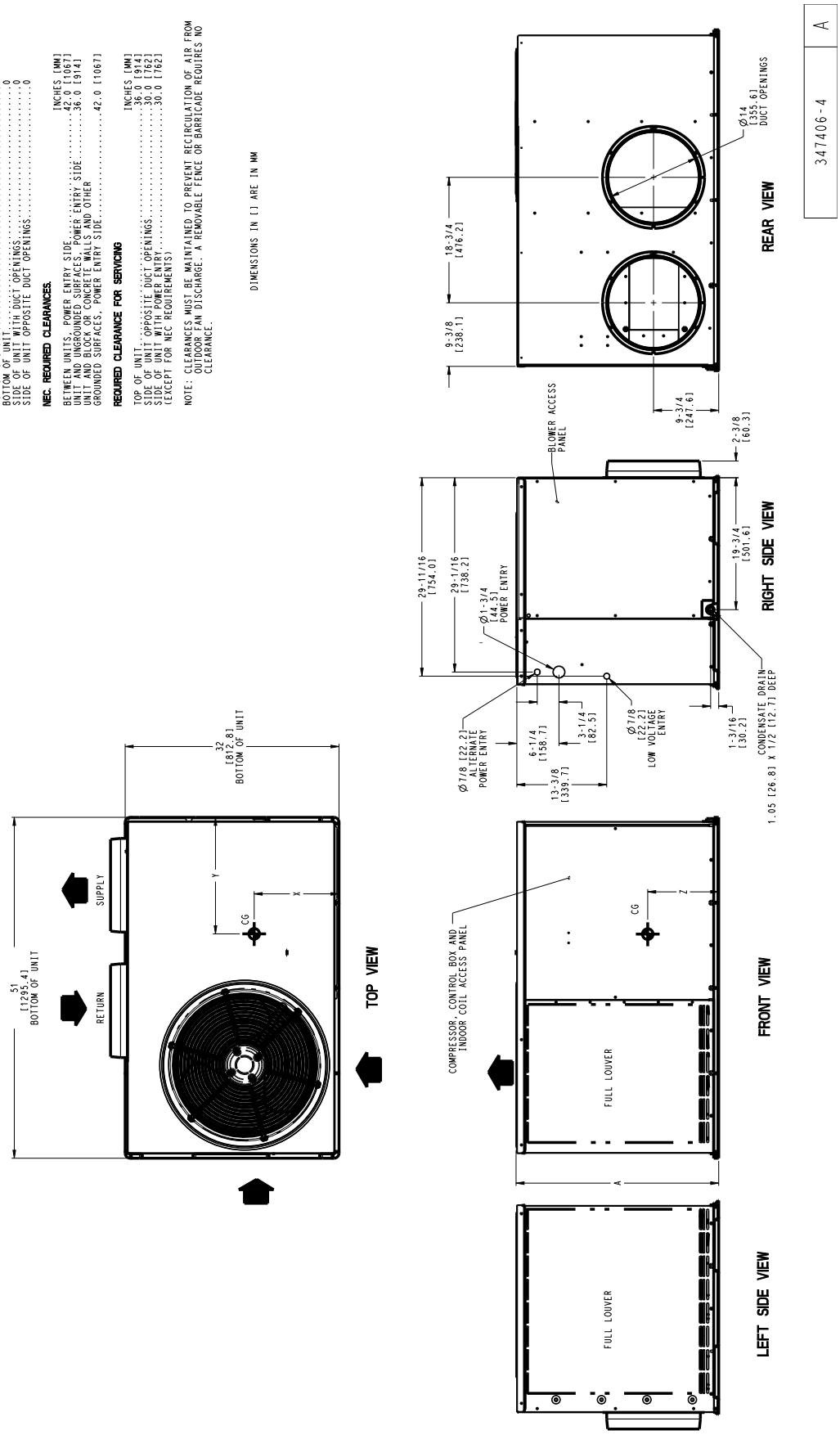

A210114

Dimensional Drawings

042-048

UNIT	ELECTRICAL CHARACTERISTICS	UNIT WT.		UNIT HEIGHT	CENTER OF GRAVITY IN [MM]		
		LBS.	KG.	A	X	Y	Z
PA4ZNK042000	208/230-1-60	275	125	34-1/8 [867]	14 [356]	19 [483]	16 [406]
PA4ZNK048000	208/230-1-60	318	144	42-1/8 [1070]	14 [356]	19 [483]	19-3/4 [503]

REQUIRED CLEARANCES TO COMBUSTIBLE MATL. INCHES [MM]

TOP OF UNIT.....0
BOTTOM OF UNIT.....0
SIDE OF UNIT WITH DUCT OPENINGS.....0
SIDE OF UNIT OPPOSITE DUCT OPENINGS.....0

NEC. REQUIRED CLEARANCES.

BETWEEN UNITS, POWER ENTRY SIDE.....42.0 [1067]
UNIT AND UNGROUNDED SURFACES, POWER ENTRY SIDE.....36.0 [914]
UNIT AND BLOCK OR CONCRETE WALLS AND OTHER GROUNDED SURFACES, POWER ENTRY SIDE.....42.0 [1067]

REQUIRED CLEARANCE FOR SERVICING

TOP OF UNIT.....36.0 [914]
SIDE OF UNIT OPPOSITE DUCT OPENINGS.....30.0 [762]
SIDE OF UNIT WITH POWER ENTRY.....30.0 [762]
(EXCEPT FOR NEC REQUIREMENTS)

NOTE: CLEARANCES MUST BE MAINTAINED TO PREVENT RECIRCULATION OF AIR FROM OUTDOOR FAN DISCHARGE. A REMOVABLE FENCE OR BARRICADE REQUIRES NO CLEARANCE.

DIMENSIONS IN [ ] ARE IN MM

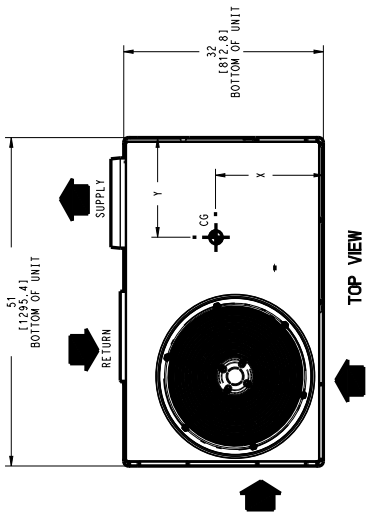

TOP VIEW

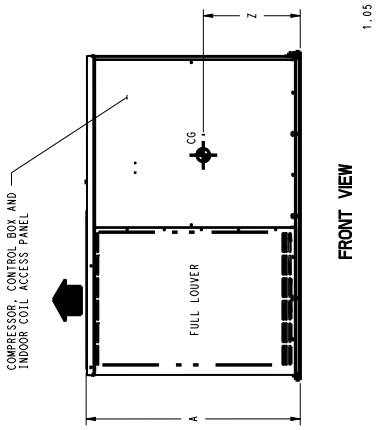

FRONT VIEW

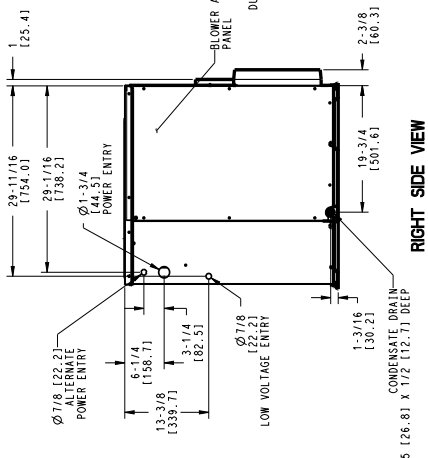

RIGHT SIDE VIEW

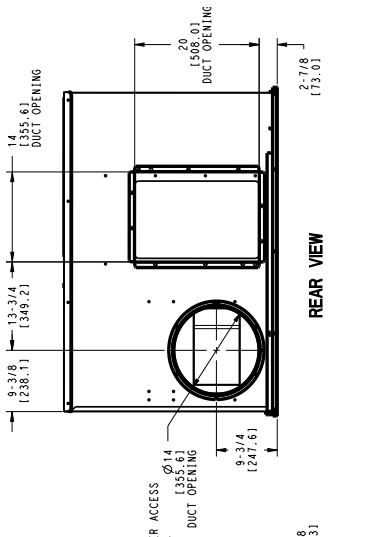

REAR VIEW

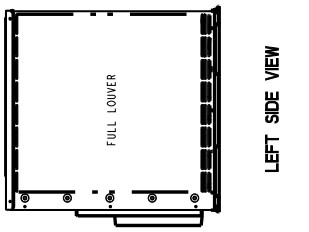

LEFT SIDE VIEW

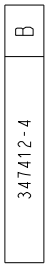

A210125

Dimensional Drawings

060

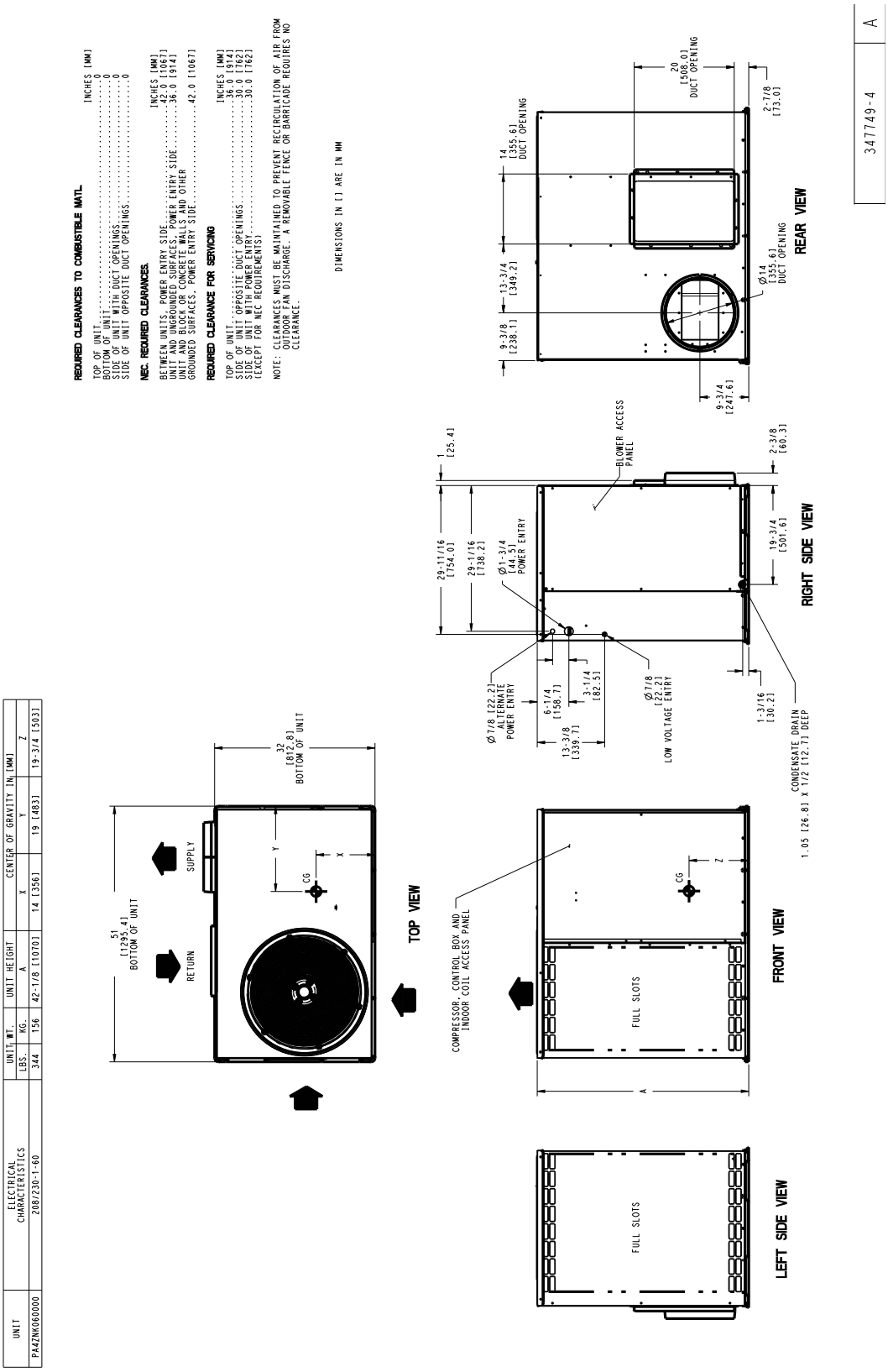

A210129

Selection Procedure

DETERMINE COOLING AND HEATING REQUIREMENTS AT DESIGN CONDITIONS.

Given:

Required Cooling Capacity (TC)	34,000 Btuh
Sensible Heat Capacity (SHC)	25,000 Btuh
Required Heating Capacity	15,000 Btuh
Outdoor Entering-Air Temperature	95°F (35°C)
Indoor Entering-Air Temperature	80°F edb (26.7°C); 67°F (19.4°C) ewb
Indoor-Air Quantity	1200 CFM
External Static Pressure	0.20 IN. W.C.
Electrical Characteristics (V-Ph-Hz)	230-1-60

edb - Entering Dry Bulb
CFM - Cubic Feet per Minute

SELECT UNIT BASED ON REQUIRED COOLING CAPACITY (3-TON EXAMPLE)

Enter Cooling Capacities table at condenser entering temperature of 95°F (35°C), indoor air entering at 1200 CFM and 67°F (19.4°C) ewb. The 036 unit provides a total cooling capacity of 34,500 Btuh and a sensible heat capacity of 26,040 Btuh.

For indoor-air temperature other than 80°F (26.7°C) edb, calculate sensible heat capacity correction, as required, using the formula found following the Cooling Capacities tables.

NOTE: Unit ratings are net capacities.

SELECT ELECTRIC HEAT

The required heating capacity is 15,000 Btuh (given).
Determine the electric heat capacity in kW.

$$\frac{15{,}000 \text{ Btuh}}{3414 \text{ Btuh/kW}} = 3.8 \text{ kW of heat required}$$

Enter the Accessory Electric Heater table on page 4for 208/230, single-phase, 036 unit. The 5-kW heater at 240v most closely satisfies the heating required. To calculate kW at 230 V, multiply the heater kW by multiplication factor 0.92 found in the Multiplication Factors table on page 4.

5 kW x 0.92 = 4.6 kW

4.6 kW x 3414 Btuh/kW = 15,704 Btuh

DETERMINE FAN SPEED AND POWER REQUIREMENTS AT DESIGN CONDITIONS.

Before entering the air delivery tables, calculate the total static pressure required. From the given, Filter Pressure Drop table, and the Accessory Electric Heat Pressure Drop table find:

External static pressure	0.20 IN. W.C.
Filter	0.10 IN. W.C.
Electric Heat	0.04 IN. W.C.
Total static pressure	0.34 IN. W.C.

Enter the table for Dry Coil Air Delivery — Horizontal Discharge. At 0.4 IN. W.C. external static pressure and medium speed, the motor delivers 1236 CFM.

Manufacturer reserves the right to change, at any time, specifications and designs without notice and without obligations.

Performance Data

Cooling Capacities

024

EVAPORATOR AIR		CONDENSER ENTERING AIR TEMPERATURES °F (°C)																	
		75 (23.9)			85 (29.4)			95 (35)			105 (40.6)			115 (46.1)			125 (51.7)		
CFM	EWB	Capacity MBtuh		Total System KW**	Capacity MBtuh		Total System KW**	Capacity MBtuh		Total System KW**	Capacity MBtuh		Total System KW**	Capacity MBtuh		Total System KW**	Capacity MBtuh		Total System KW**
		Total	Sens‡		Total	Sens‡		Total	Sens‡		Total	Sens‡		Total	Sens‡		Total	Sens‡	
024 Outdoor Section With N/A Indoor Section																			
700	57 (13.9)	22.47	22.47	1.54	21.59	21.59	1.71	20.63	20.63	1.91	19.53	19.53	2.13	18.18	18.18	2.36	16.53	16.53	2.62
	62 (16.7)	23.23	20.59	1.55	22.13	20.07	1.72	20.95	19.51	1.91	19.63	18.85	2.13	18.21	18.21	2.37	16.56	16.56	2.62
	63 (17.2)††	23.65	16.83	1.55	22.51	16.32	1.72	21.26	15.78	1.92	19.84	15.17	2.13	18.06	14.42	2.36	15.88	13.51	2.60
	67 (19.4)	25.56	17.49	1.56	24.40	17.02	1.74	23.13	16.52	1.95	21.72	15.95	2.19	20.02	15.28	2.42	17.82	14.43	2.66
	71 (21.7)	27.50	14.93	1.57	26.36	14.51	1.76	25.07	14.03	1.96	23.66	13.51	2.20	22.02	12.92	2.47	19.96	12.17	2.75
800	57 (13.9)	23.49	23.49	1.56	22.57	22.57	1.74	21.56	21.56	1.94	20.42	20.42	2.16	19.09	19.09	2.41	17.34	17.34	2.66
	62 (16.7)	23.86	22.07	1.57	22.76	21.54	1.74	21.56	21.55	1.94	20.45	20.45	2.17	19.12	19.12	2.41	17.37	17.37	2.66
	63 (17.2)††	24.19	17.86	1.57	23.01	17.36	1.75	21.73	16.81	1.94	20.29	16.21	2.16	18.52	15.47	2.39	16.29	14.53	2.62
	67 (19.4)	26.09	18.56	1.57	24.91	18.10	1.76	23.60	17.60	1.97	22.17	17.05	2.20	20.45	16.39	2.45	18.24	15.53	2.69
	71 (21.7)	28.00	15.65	1.59	26.84	15.24	1.77	25.53	14.77	1.98	24.07	14.25	2.22	22.42	13.67	2.48	20.38	12.97	2.78
900	57 (13.9)	24.34	24.34	1.58	23.38	23.38	1.76	22.34	22.34	1.97	21.17	21.17	2.20	19.79	19.79	2.45	18.03	18.03	2.70
	62 (16.7)	24.44	23.40	1.58	23.40	23.40	1.76	22.37	22.37	1.97	21.20	21.20	2.20	19.82	19.82	2.45	18.05	18.05	2.70
	63 (17.2)††	24.60	18.83	1.58	23.42	18.35	1.76	22.11	17.80	1.96	20.65	17.19	2.18	18.91	16.46	2.42	16.65	15.48	2.65
	67 (19.4)	26.50	19.55	1.59	25.29	19.11	1.77	23.97	18.62	1.98	22.52	18.08	2.22	20.80	17.43	2.48	18.60	16.57	2.72
	71 (21.7)	28.37	16.30	1.60	27.20	15.91	1.79	25.87	15.45	2.00	24.39	14.94	2.23	22.72	14.37	2.50	20.70	13.71	2.80

See Legend and Notes on page 12.

030

EVAPORATOR AIR		CONDENSER ENTERING AIR TEMPERATURES °F (°C)																	
		75 (23.9)			85 (29.4)			95 (35)			105 (40.6)			115 (46.1)			125 (51.7)		
CFM	EWB	Capacity MBtuh		Total System KW**	Capacity MBtuh		Total System KW**	Capacity MBtuh		Total System KW**	Capacity MBtuh		Total System KW**	Capacity MBtuh		Total System KW**	Capacity MBtuh		Total System KW**
		Total	Sens‡		Total	Sens‡		Total	Sens‡		Total	Sens‡		Total	Sens‡		Total	Sens‡	
030 Outdoor Section With N/A Indoor Section																			
875	57 (13.9)	27.74	27.74	1.98	26.58	26.58	2.18	25.33	25.33	2.41	23.88	23.88	2.67	22.02	22.02	2.93	19.93	19.93	3.23
	62 (16.7)	28.36	25.45	1.98	26.93	24.81	2.19	25.42	25.23	2.41	23.92	23.92	2.67	22.07	22.07	2.94	19.97	19.97	3.24
	63 (17.2)††	28.81	20.64	1.99	27.36	20.03	2.20	25.75	19.35	2.42	23.88	18.57	2.66	21.41	17.56	2.91	18.70	16.46	3.19
	67 (19.4)	31.17	21.51	2.00	29.67	20.92	2.22	28.02	20.28	2.46	26.15	19.55	2.74	23.94	18.71	3.01	21.01	17.61	3.28
	71 (21.7)	33.62	18.28	2.02	32.10	17.72	2.24	30.41	17.12	2.48	28.54	16.45	2.77	26.35	15.68	3.08	23.51	14.69	3.40
1000	57 (13.9)	29.05	29.05	2.01	27.83	27.83	2.22	26.52	26.52	2.47	25.01	25.01	2.73	23.19	23.19	3.01	20.93	20.93	3.30
	62 (16.7)	29.19	27.49	2.01	28.04	26.37	2.23	26.56	26.56	2.47	25.05	25.05	2.73	23.24	23.24	3.01	20.97	20.97	3.31
	63 (17.2)††	29.47	22.08	2.01	27.97	21.46	2.22	26.32	20.78	2.46	24.41	20.00	2.70	21.97	19.00	2.95	19.20	17.86	3.23
	67 (19.4)	31.83	23.02	2.03	30.29	22.44	2.24	28.60	21.80	2.49	26.70	21.09	2.77	24.45	20.24	3.06	21.51	19.13	3.33
	71 (21.7)	34.25	19.31	2.05	32.68	18.77	2.27	30.95	18.17	2.51	29.03	17.50	2.80	26.81	16.75	3.11	23.99	15.78	3.45
1125	57 (13.9)	30.14	30.14	2.04	28.88	28.88	2.25	27.51	27.51	2.50	25.96	25.96	2.78	24.14	24.14	3.07	21.77	21.77	3.37
	62 (16.7)	30.18	30.18	2.04	28.93	28.93	2.25	27.55	27.55	2.50	26.00	26.00	2.78	24.18	24.18	3.07	21.81	21.81	3.37
	63 (17.2)††	29.98	23.46	2.04	28.45	22.84	2.25	26.78	22.16	2.49	24.84	21.37	2.74	22.45	20.39	3.00	19.81	19.81	3.28
	67 (19.4)	32.33	24.46	2.05	30.76	23.89	2.27	29.04	23.26	2.51	27.13	22.55	2.79	24.86	21.70	3.10	21.97	20.56	3.38
	71 (21.7)	34.70	20.28	2.08	33.10	19.75	2.29	31.33	19.16	2.54	29.38	18.51	2.82	27.16	17.77	3.14	24.34	16.84	3.49

See Legend and Notes on page 12.

Manufacturer reserves the right to change, at any time, specifications and designs without notice and without obligations.

Cooling Capacities (cont)

036

EVAPORATOR AIR		CONDENSER ENTERING AIR TEMPERATURES °F (°C)																	
		75 (23.9)			85 (29.4)			95 (35)			105 (40.6)			115 (46.1)			125 (51.7)		
CFM	EWB	Capacity MBtuh		Total System KW**	Capacity MBtuh		Total System KW**	Capacity MBtuh		Total System KW**	Capacity MBtuh		Total System KW**	Capacity MBtuh		Total System KW**	Capacity MBtuh		Total System KW**
		Total	Sens‡		Total	Sens‡		Total	Sens‡		Total	Sens‡		Total	Sens‡		Total	Sens‡	
036 Outdoor Section With N/A Indoor Section																			
1050	57 (13.9)	34.66	34.66	2.28	32.80	32.80	2.54	30.77	30.77	2.80	28.54	28.54	3.09	26.12	26.12	3.42	23.51	23.51	3.80
	62 (16.7)	35.22	31.59	2.29	32.97	30.58	2.54	30.82	30.82	2.80	28.59	28.59	3.09	26.17	26.17	3.42	23.55	23.55	3.80
	63 (17.2)††	35.68	25.52	2.29	33.30	24.60	2.54	30.68	23.53	2.80	27.79	22.36	3.07	24.66	21.10	3.38	21.35	19.71	3.74
	67 (19.4)	38.45	26.17	2.31	36.36	25.74	2.56	33.71	24.80	2.83	30.81	23.73	3.14	27.59	22.53	3.46	24.16	21.24	3.81
	71 (21.7)	40.71	21.83	2.33	39.23	21.49	2.58	36.86	20.83	2.86	34.00	19.89	3.17	30.76	18.81	3.52	27.16	17.60	3.90
1200	57 (13.9)	36.19	36.19	2.32	34.28	34.28	2.57	32.19	32.19	2.85	29.87	29.87	3.16	27.34	27.34	3.49	24.61	24.61	3.86
	62 (16.7)	36.29	33.81	2.32	34.33	34.33	2.57	32.24	32.24	2.85	29.92	29.92	3.16	27.38	27.38	3.49	24.65	24.65	3.86
	63 (17.2)††	36.42	27.12	2.32	34.02	26.30	2.57	31.37	25.25	2.84	28.42	24.06	3.12	25.26	22.75	3.43	22.20	22.20	3.79
	67 (19.4)	38.99	27.61	2.34	37.06	27.45	2.59	34.40	26.60	2.87	31.46	25.55	3.18	28.21	24.33	3.51	24.80	22.96	3.86
	71 (21.7)	41.18	22.74	2.36	39.55	22.24	2.62	37.46	21.98	2.89	34.58	21.12	3.20	31.29	20.07	3.55	27.63	18.89	3.94
1350	57 (13.9)	37.32	37.32	2.35	35.50	35.50	2.61	33.35	33.35	2.89	30.98	30.98	3.20	28.36	28.36	3.55	25.53	25.53	3.92
	62 (16.7)	37.36	37.36	2.36	35.54	35.54	2.61	33.40	33.40	2.89	31.02	31.02	3.20	28.41	28.41	3.55	25.57	25.57	3.92
	63 (17.2)††	36.96	28.53	2.35	34.60	27.89	2.60	31.92	26.87	2.88	28.96	25.65	3.16	25.87	25.72	3.48	23.00	23.00	3.84
	67 (19.4)	39.36	28.91	2.37	37.57	29.00	2.62	34.93	28.28	2.90	31.99	27.24	3.21	28.76	26.01	3.56	25.61	25.61	3.92
	71 (21.7)	41.52	23.55	2.40	39.82	23.04	2.65	37.88	23.02	2.93	34.99	22.26	3.24	31.68	21.25	3.58	27.99	20.10	3.98

See Legend and Notes on page 12.

042

EVAPORATOR AIR		CONDENSER ENTERING AIR TEMPERATURES °F (°C)																	
		75 (23.9)			85 (29.4)			95 (35)			105 (40.6)			115 (46.1)			125 (51.7)		
CFM	EWB	Capacity MBtuh		Total System KW**	Capacity MBtuh		Total System KW**	Capacity MBtuh		Total System KW**	Capacity MBtuh		Total System KW**	Capacity MBtuh		Total System KW**	Capacity MBtuh		Total System KW**
		Total	Sens‡		Total	Sens‡		Total	Sens‡		Total	Sens‡		Total	Sens‡		Total	Sens‡	
042 Outdoor Section With N/A Indoor Section																			
1225	57 (13.9)	40.98	40.98	2.76	39.16	39.16	3.04	37.05	37.05	3.35	34.14	34.14	3.63	30.84	30.84	3.92	27.36	27.36	4.23
	62 (16.7)	41.93	37.74	2.77	39.68	36.70	3.05	37.19	36.83	3.36	34.20	34.20	3.63	30.90	30.90	3.92	27.41	27.41	4.23
	63 (17.2)††	42.56	30.64	2.78	40.21	29.62	3.06	37.57	28.50	3.36	33.87	26.95	3.62	29.68	25.22	3.89	25.32	23.42	4.19
	67 (19.4)	45.88	31.85	2.82	43.44	30.88	3.11	40.75	29.83	3.42	37.30	28.47	3.71	32.77	26.74	3.96	28.22	25.00	4.25
	71 (21.7)	49.37	27.04	2.86	46.81	26.10	3.14	44.00	25.08	3.44	40.78	23.93	3.76	36.13	22.27	4.04	31.25	20.60	4.30
1400	57 (13.9)	42.80	42.80	2.83	40.85	40.85	3.12	38.68	38.68	3.43	35.76	35.76	3.71	32.23	32.23	3.99	28.55	28.55	4.29
	62 (16.7)	43.07	40.67	2.83	40.90	40.90	3.12	38.74	38.74	3.43	35.82	35.82	3.71	32.28	32.28	3.99	28.60	28.60	4.29
	63 (17.2)††	43.46	32.71	2.83	41.03	31.68	3.12	38.34	30.55	3.41	34.60	29.00	3.68	30.31	27.22	3.95	26.07	26.07	4.24
	67 (19.4)	46.78	34.03	2.86	44.26	33.06	3.15	41.50	32.00	3.46	38.14	30.71	3.78	33.43	28.91	4.02	28.83	27.08	4.29
	71 (21.7)	50.20	28.52	2.90	47.56	27.58	3.18	44.66	26.56	3.48	41.40	25.42	3.80	36.73	23.81	4.09	31.72	22.12	4.35
1575	57 (13.9)	44.30	44.30	2.88	42.27	42.27	3.17	40.02	40.02	3.48	37.15	37.15	3.79	33.38	33.38	4.05	29.53	29.53	4.35
	62 (16.7)	44.37	44.37	2.88	42.33	42.33	3.17	40.07	40.07	3.48	37.20	37.20	3.79	33.43	33.43	4.05	29.58	29.58	4.35
	63 (17.2)††	44.15	34.67	2.88	41.69	33.65	3.16	38.95	32.51	3.47	35.24	30.97	3.73	30.87	29.07	4.00	26.94	26.94	4.29
	67 (19.4)	47.46	36.11	2.91	44.89	35.13	3.19	42.06	34.06	3.50	38.76	32.82	3.82	33.99	30.96	4.07	29.62	29.62	4.35
	71 (21.7)	50.80	29.90	2.94	48.10	28.97	3.22	45.14	27.96	3.52	41.84	26.84	3.84	37.18	25.30	4.14	32.06	23.58	4.40

See Legend and Notes on page 12.

Manufacturer reserves the right to change, at any time, specifications and designs without notice and without obligations.

Cooling Capacities (cont)

048

EVAPORATOR AIR		CONDENSER ENTERING AIR TEMPERATURES °F (°C)																	
		75 (23.9)			85 (29.4)			95 (35)			105 (40.6)			115 (46.1)			125 (51.7)		
CFM	EWB	Capacity MBtuh		Total System KW**	Capacity MBtuh		Total System KW**	Capacity MBtuh		Total System KW**	Capacity MBtuh		Total System KW**	Capacity MBtuh		Total System KW**	Capacity MBtuh		Total System KW**
		Total	Sens‡		Total	Sens‡		Total	Sens‡		Total	Sens‡		Total	Sens‡		Total	Sens‡	
048 Outdoor Section With N/A Indoor Section																			
1400	57 (13.9)	45.96	45.96	3.17	44.13	44.13	3.49	42.13	42.13	3.85	39.75	39.75	4.24	36.16	36.16	4.63	32.34	32.34	5.08
	62 (16.7)	47.17	42.12	3.19	44.88	41.05	3.50	42.46	39.90	3.85	39.82	39.82	4.24	36.23	36.23	4.63	32.40	32.40	5.08
	63 (17.2)††	47.85	34.24	3.20	45.47	33.21	3.51	42.90	32.11	3.86	39.88	30.84	4.24	35.16	28.88	4.60	30.24	26.85	5.03
	67 (19.4)	51.78	35.67	3.22	49.31	34.68	3.55	46.62	33.63	3.91	43.60	32.44	4.31	39.26	30.75	4.71	34.02	28.75	5.12
	71 (21.7)	55.87	30.38	3.23	53.32	29.44	3.56	50.49	28.40	3.92	47.36	27.27	4.32	43.64	25.96	4.78	38.00	23.98	5.22
1600	57 (13.9)	48.08	48.08	3.25	46.11	46.11	3.58	43.98	43.98	3.93	41.52	41.52	4.33	37.96	37.96	4.73	33.88	33.88	5.17
	62 (16.7)	48.50	45.35	3.26	46.23	45.88	3.58	44.05	44.05	3.93	41.58	41.58	4.33	38.03	38.03	4.73	33.93	33.93	5.17
	63 (17.2)††	48.93	36.54	3.26	46.45	35.48	3.58	43.79	34.36	3.92	40.69	33.08	4.31	36.01	31.13	4.68	31.04	29.00	5.10
	67 (19.4)	52.82	38.06	3.27	50.28	37.07	3.60	47.50	36.00	3.96	44.42	34.82	4.36	40.18	33.20	4.79	34.79	31.11	5.19
	71 (21.7)	56.84	31.98	3.29	54.21	31.05	3.62	51.30	30.02	3.97	48.06	28.87	4.38	44.31	27.59	4.83	38.67	25.68	5.29
1800	57 (13.9)	49.80	49.80	3.31	47.76	47.76	3.64	45.53	45.53	4.00	43.00	43.00	4.41	39.48	39.48	4.82	35.16	35.16	5.26
	62 (16.7)	49.86	49.86	3.31	47.82	47.82	3.64	45.59	45.59	4.00	43.06	43.06	4.41	39.55	39.55	4.82	35.21	35.21	5.26
	63 (17.2)††	49.73	38.68	3.31	47.22	37.65	3.64	44.49	36.50	3.99	41.36	35.20	4.38	36.74	33.25	4.75	31.92	31.92	5.17
	67 (19.4)	53.61	40.31	3.32	51.01	39.33	3.65	48.17	38.25	4.01	45.04	37.06	4.41	40.95	35.52	4.87	35.50	33.28	5.26
	71 (21.7)	57.54	33.47	3.34	54.86	32.56	3.67	51.88	31.53	4.02	48.56	30.38	4.43	44.78	29.12	4.88	39.18	27.30	5.37

See Legend and Notes on page 12.

060

EVAPORATOR AIR		CONDENSER ENTERING AIR TEMPERATURES °F (°C)																	
		75 (23.9)			85 (29.4)			95 (35)			105 (40.6)			115 (46.1)			125 (51.7)		
CFM	EWB	Capacity MBtuh		Total System KW**	Capacity MBtuh		Total System KW**	Capacity MBtuh		Total System KW**	Capacity MBtuh		Total System KW**	Capacity MBtuh		Total System KW**	Capacity MBtuh		Total System KW**
		Total	Sens‡		Total	Sens‡		Total	Sens‡		Total	Sens‡		Total	Sens‡		Total	Sens‡	
060 Outdoor Section With N/A Indoor Section																			
1500	57 (13.9)	51.31	51.31	3.71	49.49	49.49	4.09	47.51	47.51	4.53	45.35	45.35	5.02	42.98	42.98	5.58	40.36	40.36	6.19
	62 (16.7)	53.16	46.11	3.72	50.89	45.07	4.11	48.45	43.94	4.54	45.84	42.73	5.03	43.08	42.81	5.58	40.41	40.41	6.20
	63 (17.2)††	53.98	37.76	3.73	51.63	36.72	4.11	49.11	35.62	4.55	46.39	34.45	5.03	43.44	33.19	5.58	40.25	31.85	6.19
	67 (19.4)	57.94	39.09	3.76	55.38	38.04	4.15	52.65	36.94	4.59	49.72	35.76	5.08	46.55	34.51	5.63	43.13	33.18	6.24
	71 (21.7)	62.22	33.42	3.80	59.46	32.37	4.19	56.51	31.26	4.63	53.34	30.10	5.12	49.93	28.85	5.67	46.26	27.53	6.29
1700	57 (13.9)	53.38	53.38	3.78	51.43	51.43	4.16	49.30	49.30	4.60	46.98	46.98	5.10	44.44	44.44	5.65	41.66	41.66	6.27
	62 (16.7)	54.38	49.37	3.79	52.03	48.27	4.17	49.54	47.05	4.61	47.05	47.05	5.10	44.50	44.50	5.65	41.71	41.71	6.27
	63 (17.2)††	55.04	40.00	3.79	52.59	38.94	4.17	49.95	37.82	4.61	47.12	36.62	5.10	44.07	35.34	5.64	40.78	33.97	6.25
	67 (19.4)	59.00	41.48	3.82	56.34	40.42	4.21	53.50	39.29	4.65	50.45	38.10	5.14	47.17	36.82	5.69	43.65	35.46	6.30
	71 (21.7)	63.31	35.09	3.86	60.43	34.03	4.25	57.36	32.90	4.69	54.07	31.72	5.19	50.53	30.45	5.74	46.74	29.12	6.35
1850	57 (13.9)	54.72	54.72	3.83	52.67	52.67	4.22	50.44	50.44	4.66	48.02	48.02	5.15	45.37	45.37	5.71	42.48	42.48	6.33
	62 (16.7)	55.20	51.68	3.83	52.84	50.47	4.22	50.51	50.51	4.66	48.08	48.08	5.15	45.43	45.43	5.71	42.53	42.53	6.33
	63 (17.2)††	55.69	41.62	3.84	53.16	40.55	4.22	50.45	39.40	4.66	47.56	38.19	5.14	44.45	36.89	5.69	41.10	35.50	6.30
	67 (19.4)	59.64	43.22	3.87	56.91	42.14	4.26	54.00	41.00	4.70	50.89	39.79	5.19	47.55	38.50	5.74	43.97	37.12	6.35
	71 (21.7)	63.95	36.30	3.91	61.00	35.22	4.30	57.85	34.09	4.74	54.48	32.89	5.23	50.87	31.62	5.78	47.01	30.28	6.39

See Legend and Notes on page 12.

Manufacturer reserves the right to change, at any time, specifications and designs without notice and without obligations.

**System kW is total of indoor and outdoor unit kilowatts.
‡Sensible capacities shown are based on 80°F (27°C) entering air at the indoor coil. For sensible capacities at other than 80°F (27°C), deduct 835 Btuh (245 kW) per 1000 CFM (480 L/S) of indoor coil air for each degree below 80°F (27°C), or add 835 Btuh (245 kW) per 1000 CFM (480L/S) of indoor coil air per degree above 80°F (27°C).
††At TVA rating indoor condition (75°F edb/63°F ewb). All other indoor air temperatures are at 80°F (27°C) edb.

LEGEND
BF — Bypass Factor
CFM — Cubic Feet per Minute
edb — Entering Dry Bulb
ewb — Entering Wet-Bulb
^{h}ewb — Enthalpy, entering wet bulb
^{h}lwb — Enthalpy, leaving wet bulb
kW — Total Unit Power Input
SHC — Sensible Heat Capacity (1000 Btuh)
^{t} = Temperature (°F)
^{t}edb — Entering Temperature, Dry Bulb (°F)
^{t}ldb — Leaving Temperature, Dry Bulb (°F)
^{t}lwb — Leaving Temperature, Wet Bulb (°F)
TC — Total Capacity (1000 Btuh) (net)

NOTES:
1. Direct interpolation is permissible. Do not extrapolate.
2. The following formulas may be used:

$$^{t}\text{ldb} = {}^{t}\text{edb} - \frac{\text{Sensible capacity (Btuh)}}{1.10 \times \text{CFM}}$$

^{t}lwb = Wet-bulb temperature corresponding to enthalpy air leaving evaporator coil (^{h}lwb)

$$^{h}\text{lwb} = {}^{h}\text{ewb} - \frac{\text{total capacity (Btuh)}}{(4.5 \times \text{CFM})}$$

Where: ^{h}ewb = Enthalpy of air entering evaporator coil

The SHC is based on 80°F (26.7°C) edb temperature of air entering indoor coil.
Below 80°F (25.7°C) edb, subtract (corr factor x CFM) from SHC.
Above 80°F (25.7°C) edb, add (corr factor x CFM) from SHC.
Correction Factor = 1.10 x (1 - BF) x (edb - 80)

Manufacturer reserves the right to change, at any time, specifications and designs without notice and without obligations.

Filter Pressure Drop (IN. W.C.)

FILTER SIZE in. (mm)	CFM																	
	500	600	700	800	900	1000	1100	1200	1300	1400	1500	1600	1700	1800	1900	2000	2100	2200
20X20X1 (508X508X25)	0.05	0.07	0.08	0.10	0.12	0.13	0.14	0.15	—	—	—	—	—	—	—	—	—	—
20X24X1 (508X610x25)	—	—	—	0.08	0.09	0.10	0.11	0.13	0.14	0.15	0.16	—	—	—	—	—	—	—
24X30X1 (610X762x25)	—	—	—	0.04	0.05	0.06	0.07	0.07	0.08	0.09	0.10	—	—	—	—	—	—	—
24X36X1 (610X914X25)	—	—	—	—	—	—	—	0.06	0.07	0.07	0.08	0.09	0.09	0.10	0.11	0.12	0.13	0.14

Accessory Electric Heat Pressure Drop (IN. W.C.)

HEATER kW	CFM							
	800	1000	1200	1400	1600	1800	2000	2200
5-20	0.033	0.037	0.042	0.047	0.052	0.060	0.067	0.075

Wet Coil Air Delivery*

Unit Size	Speed Taps	Tap Color	Air Delivery	External Static Pressure (in. W.C.)									
				0.1	0.2	0.3	0.4	0.5	0.6	0.7	0.8	0.9	1
24	1	BLU	SCFM	893	805	721	672	628	579	530	495	455	414
	2	PNK†	SCFM	956	862	772	720	673	620	567	530	457	444
	3	RED	SCFM	1000	963	917	873	828	783	740	692	636	579
	4	ORN	SCFM	1041	1011	964	920	863	836	791	744	695	643
	5	BLK	SCFM	1182	1131	1105	1060	1025	986	944	906	864	800
30	1	BLU	SCFM	1000	965	923	883	839	800	749	716	660	617
	2	PNK†	SCFM	1060	1018	986	946	907	875	830	792	752	695
	3	RED	SCFM	1171	1135	1096	1062	1031	1000	964	929	894	857
	4	ORN	SCFM	1302	1265	1232	1195	1162	1131	1098	1066	1042	1012
	5	BLK	SCFM	1304	1267	1230	1197	1164	1132	1097	1065	1041	1000
36	1	BLU	SCFM	1226	1153	1106	1062	1015	969	921	848	802	758
	2	PNK†	SCFM	1274	1224	1182	1137	1093	1051	1008	959	891	844
	3	RED	SCFM	1398	1370	1329	1290	1250	1209	1168	1126	1085	1020
	4	ORN	SCFM	1422	1386	1349	1309	1270	1231	1192	1151	1110	1066
	5	BLK	SCFM	1530	1486	1450	1411	1372	1335	1297	1261	1222	1194
42	1	BLU	SCFM	1401	1296	1242	1188	1142	1190	1042	997	921	872
	2	PNK†	SCFM	1478	1446	1401	1355	1310	1259	1211	1168	1121	1070
	3	RED	SCFM	1539	1504	1460	1408	1366	1319	1270	1224	1180	1141
	4	ORN	SCFM	1608	1580	1537	1487	1443	1400	1354	1307	1263	1222
	5	BLK	SCFM	1632	1596	1554	1511	1466	1424	1380	1330	1285	1246
48	1	BLU	SCFM	1621	1582	1530	1480	1440	1379	1326	1280	1230	1176
	2	PNK†	SCFM	1695	1650	1605	1561	1521	1473	1411	1362	1320	1268
	3	RED	SCFM	1805	1764	1727	1680	1638	1596	1543	1488	1444	1404
	4	ORN	SCFM	1846	1807	1769	1725	1680	1639	1595	1537	1488	1447
	5	BLK	SCFM	2057	2014	1974	1935	1894	1853	1811	1768	1684	1578
60	1	BLU	SCFM	1890	1843	1802	1757	1712	1668	1626	1580	1536	1492
	2	PNK†	SCFM	1931	1903	1853	1817	1770	1729	1687	1642	1600	1554
	3	RED	SCFM	2056	2027	1985	1946	1900	1857	1819	1780	1741	1699
	4	ORN	SCFM	2070	2045	2004	1962	1921	1877	1838	1799	1761	1719
	5	BLK	SCFM	2202	2178	2139	2100	2063	2027	1981	1943	1906	1871

*. Air delivery values are based on operating voltage of 230v, wet coil, without filter or electric heater. Deduct filter and electric heater pressure drops to obtain static pressure available for ducting.

†. Factory-shipped cooling speed.

NOTES:

1. Do not operate the unit at a cooling airflow that is less than 350 cfm for each 12,000 Btuh of rated cooling capacity. Evaporator coil frosting may occur at airflows below this point.
2. Standard Cubic Feet per Minute.

Typical Connection Wiring Schematic

208/230-1-60 024-060

CONNECTION WIRING DIAGRAM

DANGER: ELECTRICAL SHOCK HAZARD DISCONNECT POWER BEFORE SERVICING

USE COPPER CONDUCTORS ONLY
FIELD SUPPLY POWER
208/230 VAC, 60 HZ, 1PH
UNIT ONLY
MAXIMUM WIRE
SIZE 2 AWG.

EQUIPMENT GROUND

FOR WIRING WITH ELECTRIC HEATERS SEE SCHEMATIC ON HEATER ACCESSORY.

CCH (IF USED)

PEV (IF USED)

OFM

COMPRESSOR PLUG

COMP

SEE NOTE 6

IFM

SEE NOTE 4

RESISTOR (1000 OHMS)

SEE NOTE 10

SEE NOTE #8

FUSE (3AMP)

PRIMARY

SECONDARY

TRAN

HPS

LPS (IF USED)

CC

24 VOLT THERMISTAT CONNECTIONS

R — RED
C — BRN
Y — YEL
W2 — WHT
G — GRN

SEE NOTE 5

ACCESSORY ELECTRIC HEAT 24 VOLT THERMISTAT CONNECTIONS (SEE NOTE 7)

W3 — PNK
W3 — VIO
W2 — GRY
W2 — WHT
C — BRN

HR4 HR3 HR2 HR1

ACCESSSORY ELECTRIC HEAT (24 VOLT HEATER RELAY CONNECTIONS)

COLOR CODE

BLK	BLACK
BLU	BLUE
BRN	BROWN
GRN	GREEN
GRY	GREY
G/Y	GREEN/YELLOW
ORN	ORANGE
PNK	PINK
RED	RED
VIO	VIOLET
WHT	WHITE
YEL	YELLOW

LEGEND

- FIELD SPLICE
- TERMINAL (MARKED)
- TERMINAL (UNMARKED)
- SPLICE
- FACTORY WIRING
- FIELD CONTROL WIRING
- FIELD POWER WIRING
- ACCESSORY OR OPTIONAL WIRING

C	CONTACTOR
CAP	CAPACITOR
CC	CONTACTOR COIL
CCH	CRANK CASE HEATER
COMP	COMPRESSOR MOTOR
GND	GROUND
HR	HEATER RELAY
IFM	INDOOR FAN MOTOR
HPS	HIGH PRESSURE SWITCH
OFM	OUTDOOR FAN MOTOR
TRAN	TRANSFORMER

UNIT COMPONENT ARRANGEMENT

OUTDOOR FAN SECTION — OFM

CONTROL BOX AREA — TRAN — CAP — HPS — IFM — COMP

SINGLE PH. CONNECTION FOR ELECT. HEAT — SEE HEATER SCHEMATIC FOR WIRING

EQUIP GND

DISCONNECT PER NEC — FIELD SUPPLIED

24 V. SPLICE BOX — THERMISTAT WIRES

NOTES:

1. IF ANY OF THE ORIGINAL WIRES FURNISHED ARE REPLACED, IT MUST BE REPLACED WITH THE SAME TYPE OF WIRE OR IT'S EQUIVALENT.
2. SEE PRICE PAGES FOR THERMOSTAT.
3. USE CONDUCTORS SUITABLE FOR AT LEAST 75°C (167°F) FOR FIELD INSTALLATION.
4. FACTORY WIRING FOR SPEED SELECTOR PLUG
5. CHANGING OF SPEED TAPS MAY BE REQUIRED WHEN USING FIELD INSTALLED ELECTRIC HEATERS, CONSULT INSTALLATION INSTRUCTIONS TO DETERMINE CORRECT SPEED TAP SETTING.
6. "DO NOT DISCONNECT PLUG UNDER LOAD."
7. MULTI-STAGE HEATER SHOWN. SINGLE STAGE HEATERS HAVE WHITE AND BROWN WIRES ONLY.
8. FUSE MANUFACTURED BY LITTELFUSE, P/N 257003.
9. N.E.C. CLASS 2 24 V
10. CONSULT INSTALLATION INSTRUCTION FOR FACTORY SPEED TAP SETTINGS.

A210120

Typical Ladder Wiring Schematic

208/230-1-60 024-060

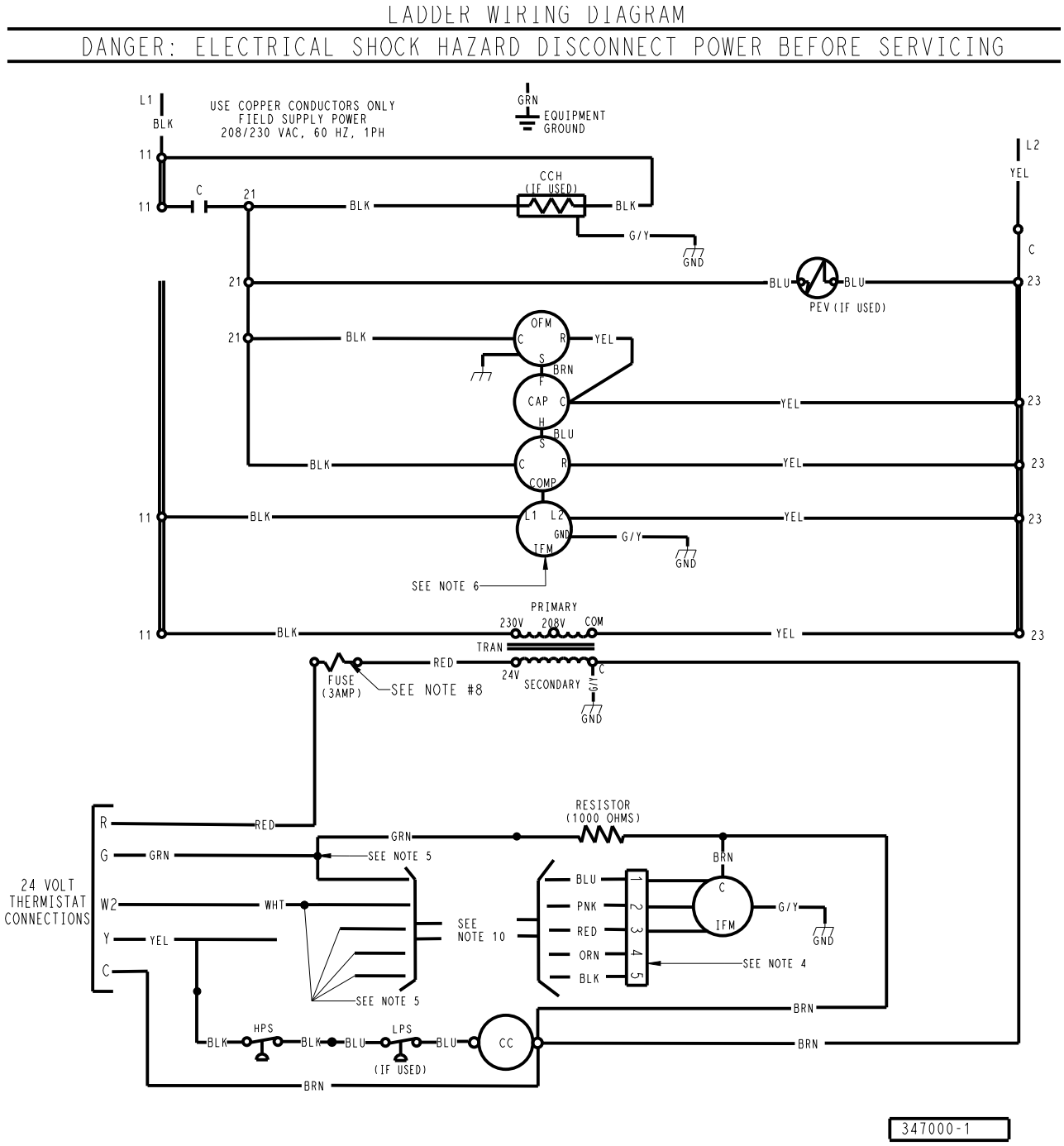

A14549

Typical Field Wiring

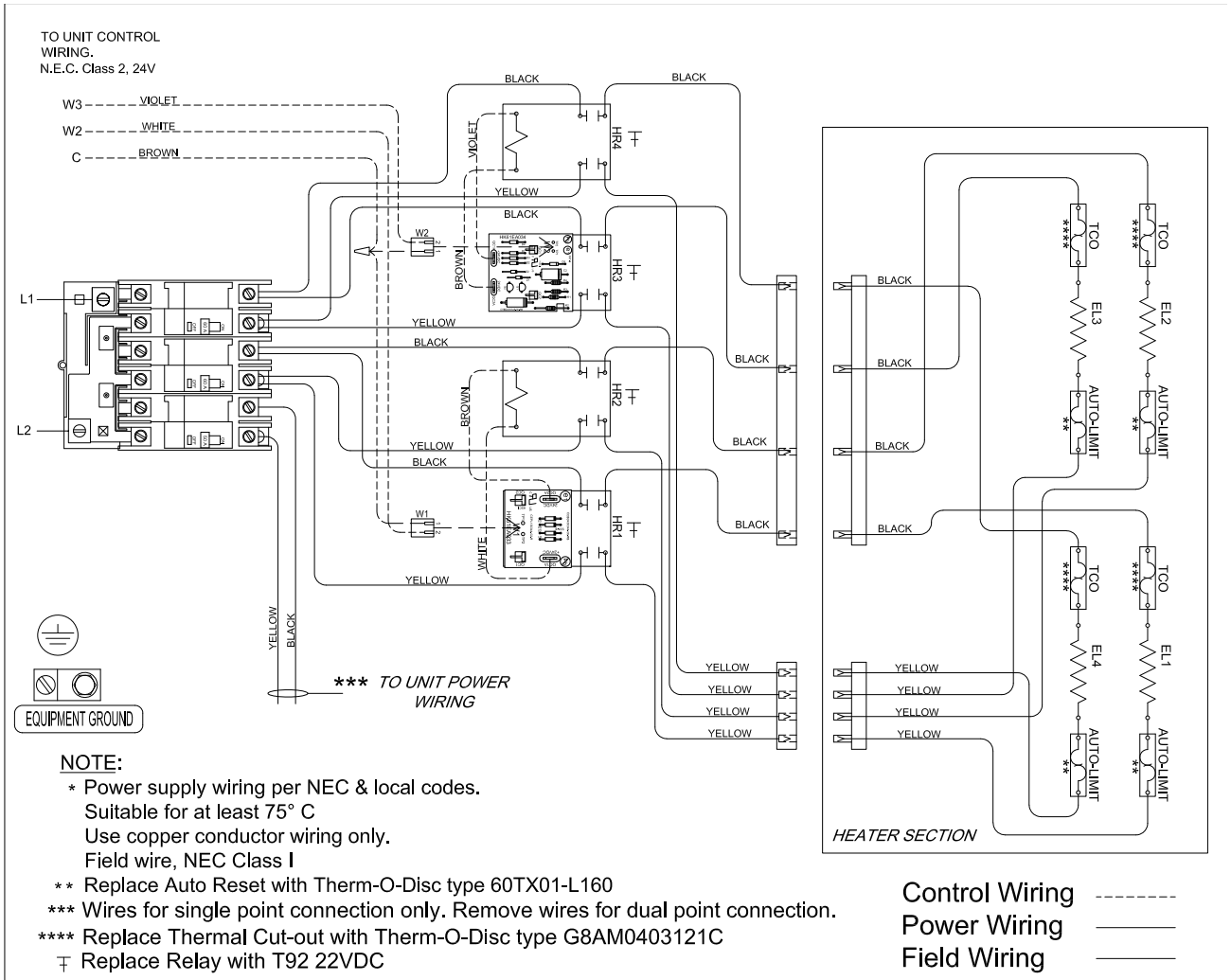

NOTE:

- * Power supply wiring per NEC & local codes.
  Suitable for at least 75° C
  Use copper conductor wiring only.
  Field wire, NEC Class I
- ** Replace Auto Reset with Therm-O-Disc type 60TX01-L160
- *** Wires for single point connection only. Remove wires for dual point connection.
- **** Replace Thermal Cut-out with Therm-O-Disc type G8AM0403121C
- ⊤ Replace Relay with T92 22VDC

Control Wiring --------
Power Wiring ———
Field Wiring ———

KILOWATTS	VOLTS	PHASE	HERTZ	CONTROL VOLTS	STEPS	HEATER AMPS	CIRCUIT BREAKER		
							C.B. # 1	C.B. # 2	C.B. # 3
15.0/20.0	208/240	1	60	24 AC	2	72.1/83.3	50A	60A	60A
CPHEATER132A03 (110070158)									

A190339

Single-Phase Accessory Electric Heater Wiring

Electrical Data

MODEL	NOMINAL V-PH-HZ	VOLTAGE RANGE		COMPRESSOR		OFM	IFM	NOMINAL ELECTRIC HEAT*	POWER SUPPLY		
		MIN	MAX	RLA	LRA	FLA	FLA	kW	FLA	MCA	MOCP†
24	208/230-1-60	197	253	10.3	61.6	0.9	2.8	-/-	-/-	16.6	25
								3.8/5	18/20.8	26.0/29.5	30/30
								5.4/7.2	27/31.3	37.3/42.6	40/45
								7.5/10	36.1/41.7	48.6/55.6	50/60
30	208/230-1-60	197	253	13.5	72.5	0.9	4.1	-/-	-/-	21.9	35
								3.8/5	18/20.8	27.6/31.1	35/35
								5.4/7.2	27/31.3	38.9/44.3	40/45
								7.5/10	36.1/41.7	50.3/57.3	60/60
36	208/230-1-60	197	253	14.1	77	1.6	4.1	-/-	-/-	23.3	35
								3.8/5	18/20.8	27.7/31.1	35/35
								5.4/7.2	27/31.3	38.9/44.3	40/45
								7.5/10	36.1/41.7	50.3/57.3	60/60
								11.3/15	54.1/62.5	72.8/83.3	80/90
42	208/230-1-60	197	253	15.9	112	1.5	4.1	-/-	-/-	25.5	40
								3.8/5	18/20.8	27.6/31.1	40/40
								5.4/7.2	27/31.3	38.9/44.3	40/45
								7.5/10	36.1/41.7	50.3/57.3	60/60
								11.3/15	54.1/62.5	72.8/83.3	80/90
48	208/230-1-60	197	253	18.3	108	1.5	6	-/-	-/-	30.4	45
								3.8/5	18/20.8	30.4/33.5	45/45
								5.4/7.2	27/31.3	41.3/46.6	45/50
								7.5/10	36.1/41.7	52.6/59.6	60/60
								11.3/15	54.1/62.5	75.1/85.6	80/90
								15/20	72.1/83.3	97.6/111.6	100/125
60	208/230-1-60	197	253	23.7	153	1.9	7.5	-/-	-/-	39	60
								3.8/5	18/20.8	39/39	60/60
								5.4/7.2	27/31.3	43.1/48.5	60/60
								7.5/10	36.1/41.7	54.5/61.5	60/70
								11.3/15	54.1/62.5	77/87.5	80/90
								15/20	72.1/83.3	99.5/113.5	100/125

* Heater capacity (kW) based on heater voltage of 208v & 240v. If power distribution voltage to unit varies from rated heater voltage, heater kW will vary accordingly.
† HACR Type Circuit breaker
LEGEND
FLA - Full Load Amps
LRA - Locked Rotor Amps
MCA - Minimum Circuit Amps
MOCP - Maximum Overcurrent Protection
RLA - Rated Load Amps
NOTES:
1. In compliance with NEC (National Electrical Code) requirements for multi motor and combination load equipment (refer to NEC Articles 430 and 440), the overcurrent protective device for the unit shall be Power Supply fuse or circuit breaker.
2. Minimum wire size is based on 60°C copper wire. If other than 60°C wire is used, or if length exceeds wire length in table, determine size from NEC.

Operating Sequence

Cooling Operation

With a call for cooling (Y/G), the contactor is energized which brings on the compressor and outdoor fan. The indoor fan is also energized. When the cooling demand is met, Y and G are de-energized shutting off the contactor. The indoor fan stops after a 60 second delay.

Heating Operation

With a call for heating (W2), the auxiliary or electric heat energizes along with the indoor blower. In case of staged heating, W3 is energized if the demand is not met. The highest airflow selected is run while the electric heat is in operation. When heating demand is met, W3 and W2 sequentially de-energize shutting off the indoor fan and the electric heater.

Continuous Fan

With the continuous indoor fan option selected on the thermostat, G is continuously energized keeping the indoor fan running at all times.

Application Data

Condensate trap — A 2-in. (51 mm) condensate trap must be field supplied.

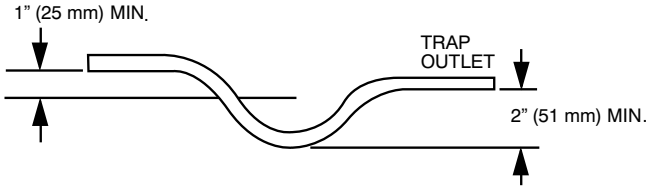

A08001

Maximum cooling airflow — To minimize the possibility of condensate blow-off from the evaporator, airflow through the units should not exceed 450 CFM/ton.

Minimum cooling airflow — The minimum cooling airflow is 350 CFM/ton.

Minimum cooling operating outdoor air temperature — All standard units have a minimum ambient operating temperature of 40°F (4.4°C). With accessory low ambient temperature kit, units can operate at temperatures down to 0°F (-17.8°C).

Maximum operating outdoor air temperature — Maximum outdoor operating air temperature for cooling is 125°F (51.7°C).

Typical Installation

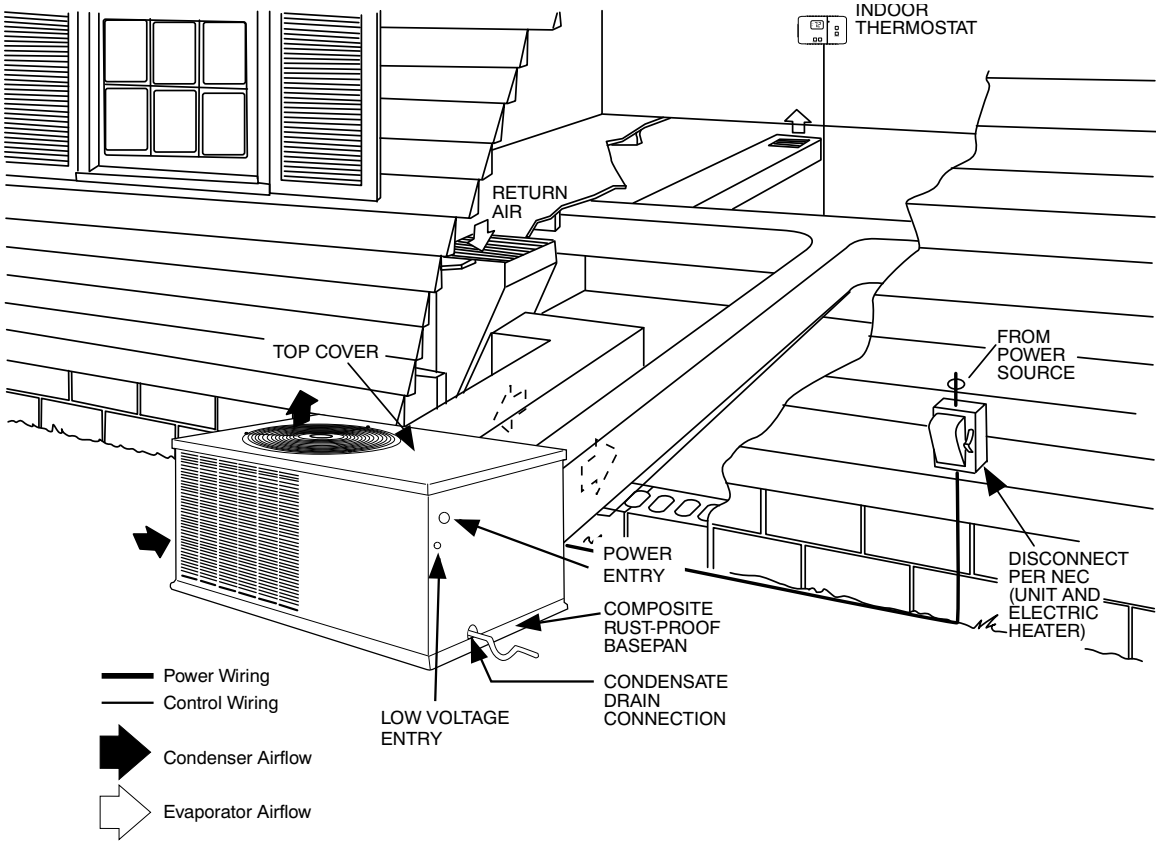

A10135

Guide Specifications

General

Furnish and install outdoor package, electrically controlled, air conditioner utilizing a reciprocating or scroll compressor for cooling duty. Unit shall discharge supply air horizontally as shown on contract drawings.

Nominal unit electrical characteristics shall be _____ v, _____ ph, 60 Hz. The unit shall be capable of satisfactory operation within voltage limits of _____ v to _____ v. Unit power wiring shall enter unit cabinet at a single location.

Separate power supply shall not be required for electric heat.

Cooling Capacity

Total cooling capacity of the unit shall be _____ Btuh or greater, and sensible capacity shall be _____ Btuh or greater at conditions of _____ CFM indoor air entering unit at _____F dry bulb, _____ F wet bulb and outdoor entering air of _____F dry bulb. Total design conditions shall be a minimum of _____ Btuh/Watt. The unit shall be capable of cooling operation down to 40°F (4.4°C) as shipped from the factory.

Cabinet

Unit cabinet shall be constructed of phosphated, bonderized, zinc-coated, prepainted steel. Basepan shall be made of a single-piece non-corrosive, composite material.

Evaporator-fan compartment interior cabinet surfaces shall be insulated with a minimum 1/2-in. (12.7 mm) thick, flexible fiberglass insulation, coated on the air side with aluminum foil.

Cabinet panels shall be easily removable for servicing.

Outdoor coil shall be protected by metal louvered panels.

Compressor

Compressor shall be fully hermetic type with external vibration isolation.

Condenser Section

Condenser fan shall be of the direct-driven propeller type blades, riveted to corrosion-resistant spiders, and shall be dynamically balanced and discharge air vertically upwards.

Condenser coils shall have aluminum-plate fins mechanically bonded to copper tubes with all joints brazed.

Tube sheet openings shall be belled to prevent tube wear.

Evaporator Section

Fan shall be multi-speed with direct drive motor as shown on the equipment drawings.

Fan wheel shall be made from steel, be double-inlet type with forward-curved blades with a corrosion-resistant finish and dynamically balanced.

Evaporator coils shall have aluminum-plate fins mechanically bonded to aluminum tubes with all joints brazed.

Tube sheet openings shall be belled to prevent tube wear.

Motors

Compressor motors shall be of the refrigerant cooled type with line break thermal and current overload protection.

All fan motors shall have permanently lubricated bearings, and inherent automatic reset thermal overload protection.

Condenser fan motor shall be totally enclosed.

Refrigerant System

Refrigerant system shall include fixed orifice or TXV metering system.

Controls

Unit shall be complete with self-contained low voltage control circuit.

Manufacturer reserves the right to change, at any time, specifications and designs without notice and without obligations.

Approvals

Unit shall be UL listed as a total package for safety requirements. All wiring shall be in accordance with NEC.

Unit shall be rated in accordance with AHRI Standards 210/240.

Cabinet insulation shall conform to ASHRAE Standard 62.2

Insulation and adhesive shall meet NFPA 90A requirements for flame spread and smoke generation.

Unit shall have a sloped drain pan that conforms to ASHRAE Standard 62.2.

Accessories

Field-installed accessories shall include solid-state compressor short-cycle device, outdoor thermostat, room thermostats, electric heaters with single-point connection, crankcase heater, and low-ambient kit.

© 2023 Carrier. All rights reserved.

Manufacturer reserves the right to change, at any time, specifications and designs without notice and without obligations.