24ABB3C
Comfort™ 13 Air Conditioner for Coastal Applications with Puron® Refrigerant

Carrier
turn to the experts™

Product Data

Puron™
the environmentally sound refrigerant

WeatherShield™

Carrier's Air Conditioners with Puron® refrigerant provide a collection of features unmatched by any other family of equipment. The 24ABB has been designed utilizing Carrier's Puron refrigerant. The environmentally sound refrigerant allows you to make a responsible decision in the protection of the earth's ozone layer.

This product has been designed and manufactured to meet Energy Star® criteria for energy efficiency when matched with appropriate coil components. Refer to the combination ratings in the Product Data for system combinations that meet Energy Star® guidelines.

NOTE: Ratings contained in this document are subject to change at any time. Always refer to the AHRI directory (www.ahridirectory.org) for the most up-to-date ratings information.

INDUSTRY LEADING FEATURES / BENEFITS

Efficiency

- 13.0 - 15.0 SEER/10.5 - 12.2 EER
- Microtube Technology™ refrigeration system
- Indoor air quality accessories available

Sound

- Sound level as low as 75 dBA

Comfort

- System supports Thermidistat™ or standard thermostat controls

Reliability

- Puron® refrigerant - environmentally sound, won't deplete the ozone layer and low lifetime servce cost.
- Front-seating service valves
- Scroll compressor
- Internal pressure relief valve
- Internal thermal overload
- Filter drier
- Balanced refrigeration system for maximum reliability

Durability

WeatherArmor™ protection package:

- Solid, durable sheet metal construction
- Dense wire coil guard
- Baked-on powder paint on all sides

ArmorPlate Condenser Coil

- Aluminum fin material is pre-coated on both sides with a corrosion protective epoxy phenolic coating.

Applications

- Long-line - up to 250 feet (76.20 m) total equivalent length, up to 200 feet (60.96 m) condenser above evaporator, or up to 80 ft. (24.38 m) evaporator above condenser (See Longline Guide for more information.)
- Low ambient (down to -20°F/-28.9°C)) with accessory kit

MODEL NUMBER NOMENCLATURE

1	2	3	4	5	6	7	8	9	10	11	12	13
N	N	A	A	A/N	N	N	N	A/N	A/N	A/N	N	N
2	**4**	**A**	**B**	**B**	**3**	**3**	**6**	**C**	**0**	**0**	**3**	**0**
Product Series		Product Family	Tier	Major Series	SEER	Cooling Capacity		Variations	Open	Open	Voltage	Series
24=AC		A=RES AC	B=Comfort	B=Puron	3=13 SEER			C=Coastal	0=Not Defined	0=Not Defined	3=208/230–1	0 = Original Series

Puron™ the environmentally sound refrigerant

AHRI CERTIFIED™ www.ahridirectory.org

Use of the AHRI Certified TM Mark indicates a manufacturer's participation in the program For verification of certification for individual products, go to www.ahridirectory.org.

ISO 9001:2000 QMI REGISTERED

c UL US

ENERGY STAR

WeatherShield™

This product has been designed and manufactured to meet Energy Star® criteria for energy efficiency when matched with appropriate coil components. However, proper refrigerant charge and proper air flow are critical to achieve rated capacity and efficiency. Installation of this product should follow all manufacturing refrigerant charging and air flow instructions. **Failure to confirm proper charge and air flow may reduce energy efficiency and shorten equipment life.**

STANDARD FEATURES

Feature	**18**	**24**	**30**	**36**	**42**	**48**	**60**
Puron Refrigerant	X	X	X	X	X	X	X
Maximum SEER Rating	14.5	14.5	14.5	15	14.5	14.5	13.5
Scroll Compressor	X	X	X	X	X	X	X
Dense Wire Coil Guard	X	X	X	X	X	X	X
Field Installed Filter Drier	X	X	X	X	X	X	X
Front Seating Service Valves	X	X	X	X	X	X	X
Internal Pressure Relief Valve	X	X	X	X	X	X	X
Internal Thermal Overload	X	X	X	X	X	X	X
Long Line capability	X	X	X	X	X	X	X
Low Ambient capability with Kit	X	X	X	X	X	X	X

X = Stanadard

REFRIGERANT PIPING LENGTH LIMITATIONS

Liquid Line Sizing and Maximum Total Equivalent Lengths† for Cooling Only Systems with Puron® Refrigerant:

The maximum allowable length of a residential split system depends on the liquid line diameter and vertical separation between indoor and outdoor units.

See Table below for liquid line sizing and maximum lengths :

Maximum Total Equivalent Length
Outdoor Unit BELOW Indoor Unit

Size	Liquid Line Connection	Liquid Line Diam. w/ TXV	AC with Puron Refrigerant Maximum Total Equivalent Length†: Outdoor unit BELOW Indoor Vertical Separation ft (m)								
			0–5 (0–1.5)	6–10 (1.8–3.0)	11–20 (3.4–6.1)	21–30 (6.4–9.1)	31–40 (9.4–12.2)	41–50 (12.5–15.2)	51–60 (15.5–18.3)	61–70 (18.6–21.3)	71–80 (21.6–24.4)
018 AC with Puron	3/8	1/4	150	150	125	100	100	75	– –	– –	– –
		5/16	250*	250*	250*	250*	250*	250*	250*	225*	150
		3/8	250*	250*	250*	250*	250*	250*	250*	250*	250*
024 AC with Puron	3/8	1/4	75	75	75	50	50	– –	– –	– –	– –
		5/16	250*	250*	250*	250*	250*	225*	175	125	100
		3/8	250*	250*	250*	250*	250*	250*	250*	250*	250*
030 AC with Puron	3/8	1/4	30	– –	– –	– –	– –	– –	– –	– –	– –
		5/16	175	225*	200	175	125	100	75	– –	– –
		3/8	250*	250*	250*	250*	250*	250*	250*	250*	250*
036 AC with Puron	3/8	5/16	175	150	150	100	100	100	75	– –	– –
		3//8	250*	250*	250*	250*	250*	250*	250*	250*	250*
042 AC with Puron	3/8	5/16	125	100	100	75	75	50	– –	– –	– –
		3/8	250*	250*	250*	250*	250*	250*	250*	250*	150
048 AC with Puron	3/8	3/8	250*	250*	250*	250*	250*	250*	230	160	– –
060 AC with Puron	3/8	3/8	250*	250*	250*	225*	190	150	110	– –	– –

*** Maximum actual length not to exceed 200 ft (61 m)**

† Total equivalent length accounts for losses due to elbows or fitting. See the Long Line Guideline for details.

– – = outside acceptable range

Maximum Total Equivalent Length
Outdoor Unit ABOVE Indoor Unit

Size	Liquid Line Connection	Liquid Line Diam. w/ TXV	AC with Puron Refrigerant Maximum Total Equivalent Length†: Outdoor unit ABOVE Indoor Vertical Separation ft (m)							
			25 (7.6)	26–50 (7.9–15.2)	51–75 (15.5–22.9)	76–100 (23.2–30.5)	101–125 (30.8–38.1)	126–150 (38.4–45.7)	151–175 (46.0–53.3)	176–200 (53.6–61.0)
018 AC with Puron	3/8	1/4	175	250*	250*	250*	250*	250*	250*	250*
		5/16	250*	250*	250*	250*	250*	250*	250*	250*
		3/8	250*	250*	250*	250*	250*	250*	250*	250*
024 AC with Puron	3/8	1/4	100	125	175	200	225*	250*	250*	250*
		5/16	250*	250*	250*	250*	250*	250*	250*	250*
		3/8	250*	250*	250*	250*	250*	250*	250*	250*
030 AC with Puron	3/8	1/4	30	– –	– –	– –	– –	– –	– –	– –
		5/16	250*	250*	250*	250*	250*	250*	250*	250*
		3/8	250*	250*	250*	250*	250*	250*	250*	250*
036 AC with Puron	3/8	5/16	225*	250*	250*	250*	250*	250*	250*	250*
		3/8	250*	250*	250*	250*	250*	250*	250*	250*
042 AC with Puron	3/8	5/16	175	200	250*	250*	250*	250*	250*	250*
		3/8	250*	250*	250*	250*	250*	250*	250*	250*
048 AC with Puron	3/8	3/8	250*	250*	250*	250*	250*	250*	250*	250*
060 AC with Puron	3/8	3/8	250*	250*	250*	250*	250*	250*	250*	250*

*** Maximum actual length not to exceed 200 ft (61 m)**

† Total equivalent length accounts for losses due to elbows or fitting. See the Long Line Guideline for details.

– – = outside acceptable range

REFRIGERANT CHARGE ADJUSTMENTS

Liquid Line Size	Puron Charge oz/ft (g/m)
3/8	0.60 (17.74) (Factory charge for lineset = 9 oz / 266.16 g)
5/16	0.40 (11.83)
1/4	0.27 (7.98)

Units are factory charged for 15 ft (4.6 m) of 3/8" liquid line. The factory charge for 3/8" lineset 9 oz. When using other length or diameter liquid lines, charge adjustments are required per the chart above.

Charging Formula:

[(Lineset oz/ft x total length) – (factory charge for lineset)] = charge adjustment

Example 1: System has 15 ft of line set using existing 1/4" liquid line. What charge adjustment is required?

Formula: (.27 oz/ft x 15ft) – (9 oz) = (-4.95) oz.

Net result is to remove 4.95 oz of refrigerant from the system

Example 2: System has 45 ft of existing 5/16" liquid line. What is the charge adjustment?

Formula: (.40 oz/ft. x 45ft) – (9 oz.) = 9 oz.

Net result is to add 9 oz of refrigerant to the system

LONG LINE APPLICATIONS

An application is considered Long Line, when the refrigerant level in the system requires the use of accessories to maintain acceptable refrigerant management for systems reliability. See Accessory Usage Guideline table for required accessories. Defining a system as long line depends on the liquid line diameter, actual length of the tubing, and vertical separation between the indoor and outdoor units.

For Air Conditioner systems, the chart below shows when an application is considered Long Line.

AC WITH PURON® REFRIGERANT LONG LINE DESCRIPTION ft (m)
Beyond these lengths, long line accessories are required

Liquid Line Size	Units On Same Level	Outdoor Below Indoor	Outdoor Above Indoor
1/4	No accessories needed within allowed lengths	No accessories needed within allowed lengths	175 (53.3)
5/16	120 (36.6)	50 (15.2) vertical or 120 (36.6) total	120 (36.6)
3/8	80 (24.4)	35 (10.7) vertical or 80 24.4) total	80 (24.4)

Note: See Long Line Guideline for details

VAPOR LINE SIZING AND COOLING CAPACITY LOSS

Acceptable vapor line diameters provide adequate oil return to the compressor while avoiding excessive capacity loss. The suction line diameters shown in the chart below are acceptable for AC systems with Puron refrigerant:

Vapor Line Sizing and Cooling Capacity Losses — Puron® Refrigerant 1-Stage Air Conditioner Applications

Unit Nominal Size (Btuh)	Maximum Liquid Line Diameters (In. OD)	Vapor Line Diameters (In. OD)	Cooling Capacity Loss (%) Total Equivalent Line Length ft. (m)								
			26–50 (7.9–15.2)	51–80 (15.5–24.4)	81–100 (24.7–30.5)	101–125 (30.8–38.1)	126–150 (38.4–45.7)	151–175 (46.0–53.3)	176–200 (53.6–61.0)	201–225 (61.3–68.6)	226–250 (68.9–76.2)
018 1 Stage AC with Puron	3/8	1/2	1	2	3	5	6	7	8	9	11
		5/8	0	1	1	1	2	2	2	3	3
		3/4	0	0	0	0	1	1	1	1	1
024 1 Stage AC with Puron	3/8	5/8	0	1	2	2	3	3	4	5	5
		3/4	0	0	1	1	1	1	1	2	2
		7/8	0	0	0	0	0	1	1	1	1
030 1 Stage AC with Puron	3/8	5/8	1	2	3	3	4	5	6	7	8
		3/4	0	0	1	1	1	2	2	2	3
		7/8	0	0	0	0	1	1	1	1	1
036 1 Stage AC with Puron	3/8	5/8	1	2	4	5	6	8	9	10	12
		3/4	0	1	1	2	2	3	3	4	4
		7/8	0	0	0	1	1	1	1	2	2
042 1 Stage AC with Puron	3/8	3/4	0	1	2	2	3	4	4	5	6
		7/8	0	0	1	1	1	2	2	2	3
		1 1/8	0	0	0	0	0	0	0	0	0
048 1 Stage AC with Puron	3/8	3/4	0	1	2	3	4	5	5	6	7
		7/8	0	0	1	1	2	2	2	3	3
		1 1/8	0	0	0	0	0	0	0	1	1
060 1 Stage AC with Puron	3/8	3/4	1	2	4	5	6	7	9	10	11
		7/8	0	1	2	2	3	4	4	5	5
		1 1/8	0	0	0	1	1	1	1	1	1

Applications in this area may be long line and may have height restrictions. See the *Residential Piping and Long Line Guideline*.

PHYSICAL DATA

UNIT SIZE SERIES	18–30	24–30	30–30	36–30	42–30	48–30	60–31
Operating Weight lb (kg)	128 (58.1)	133 (60.3)	155 (70.3)	167 (75.7)	188 (85.3)	197 (89.4)	227 (102.7)
Shipping Weight lb (kg)	159 (72.1)	167 (75.7)	193 (87.3)	205 (92.8)	225 (102.1)	235 (106.6)	267 (120.9)
Compressor Type	Scroll						
REFRIGERANT	Puron (R–410A)						
Control	TXV (Puron Hard Shutoff)						
Charge lb (kg)	4.1 (1.86)	5.1 (2.31)	5.8 (2.63)	6.8 (3.08)	6.2 (2.81)	7.3 (3.31)	9.9 (4.49)
COND FAN	Propeller Type, Direct Drive						
Air Discharge	Vertical						
Air Qty (CFM)	1881	2196	3167	3167	3810	3810	4046
Motor HP	1/12	1/10	1/5	1/5	1/5	1/5	1/4
Motor RPM	1100	1100	1100	1100	800	800	800
COND COIL							
Face Area (Sq ft)	13.13	14.77	17.25	21.56	17.60	20.12	17.60
Fins per In.	20	20	20	20	20	20	20
Rows	1	1	1	1	1	1	2
Circuits	3	3	3	5	4	5	8
VALVE CONNECT. (In. ID)							
Vapor	5/8	5/8	3/4	3/4	7/8	7/8	7/8
Liquid	3/8	3/8	3/8	3/8	3/8	3/8	3/8
REFRIGERANT TUBES (In. OD)							
Rated Vapor*	5/8		3/4		7/8		1–1/8
Vapor	3/4		7/8		1–1/8		1–1/8
Liquid (0–50 ft / 0 – 15.2 m) Tube Length)	3/8”						
Liquid (For Long–Line applications)	3/8”						

* Units are rated with 25 ft (7.6 m) of lineset length. See Vapor Line Sizing and Cooling Capacity Loss table when using other sizes and lengths of lineset

Note: See unit Installation Instruction for proper installation.

ACCESSORY THERMOSTATS

PART NUMBER	PROGRAM	GAS	ELECTRIC	HEAT PUMP	HEAT	COOL
TC–PAC01	5–2 Day	√	√		1	1
TC–NAC01	NP	√	√		1	1
TCSNAC01	NP	√	√		1	1

THERMOSTAT ACCESSORIES		
PART NUMBER	**DESCRIPTION**	**THERMOSTATS USED WITH**
TSTATXXCNV10‡	Thermostat Conversion Kit (4 to 5 wire) – 10 pack	All Carrier branded thermostats
TX–LBP01	Large Decorative Backplate	TP–Pxx, TP–Nxx, TC–Pxx
TX–MBP01	Medium Decorative Backplate	TC–Nxx, TB–Pxx

ACCESSORIES

ORDER NUMBER	DESCRIPTION	Size – Voltage & Series						
		18–30	24–30	30–30	36–30	42–30	48–30	60–31
KAAFT0101AAA	FREEZE THERMOSTAT	X	X	X	X	X	X	X
KAATD0101TDR	TIME DELAY RELAY	X	X	X	X	X	X	X
KAAWS0101AAA	WINTER START	X	X	X	X	X	X	X
KSALA0301410	LOW AMBIENT PSW	X	X	X	X	X	X	X
KSALA0601AAA†	MOTORMASTER 230V	X	X	X	X	X	X	X
HC32GE234	MOTOR FAN BALL BEARING	X						
HC34GE239	MOTOR FAN BALL BEARING		X					
HC38GE219	MOTOR FAN BALL BEARING			X	X			
HC40GE228	MOTOR FAN BALL BEARING					X	X	X
KSAHS1701AAA	HARD START (CAP / RELAY)	X	X	X	X	X	X	X
KSACY0101AAA	CYCLE PROTECTOR	X	X	X	X	X	X	X
KSASF0101AAA	SUPPORT FEET	X	X	X	X	X	X	X
KAACS0201PTC	START ASSIST PTC	X	X	X	X	X	X	X
KAACH1201AAA	CRANKCASE HTR					X	X	X
KAACH1401AAA	CRANKCASE HTR	X	X	X	X			
KSATX0201PUR	TXV PURON HSO	X	X	X				
KSATX0301PUR	TXV PURON HSO				X	X		
KSATX0401PUR	TXV PURON HSO						X	
KSATX0501PUR	TXV PURON HSO							X
KSASH0601COP	SOUND HOOD	X	X	X	X	X	X	
KSASH2101COP	SOUND HOOD							X
KAALP0301PUR	LOW PRESSURE SWITCH	X	X	X	X	X	X	X
KAAHI0501PUR	HIGH PRESSURE SWITCH	X	X	X	X	X	X	X
KAALS0201LLS	LIQUID LINE SOLENOID	X	X	X	X	X	X	X
KHASS0606MPK*	SNOW STAND RACK	X	X	X	X	X	X	X

† Required accessories include ball bearing fan motor, compressor start assist (CAP / Relay), crankcase heater, evaporator freeze stat, hard shut–off TXV.

X Available accessory

* Available for order through RCD

ACCESSORY USAGE GUIDELINE

ACCESSORY	REQUIRED FOR LOW–AMBIENT COOLING APPLICATIONS (Below 55°F/12.8°C)	REQUIRED FOR LONG LINE APPLICATIONS* (Over 80 ft./24.38 m)	REQUIRED FOR SEA COAST APPLICATIONS (Within 2 miles/3.22 km)
Ball Bearing Fan Motor	Yes†	No	No
Compressor Start Assist Capacitor and Relay	Yes	Yes	No
Crankcase Heater	Yes	Yes	No
Evaporator Freeze Thermostat	Yes	No	No
Hard Shut–Off TXV	Yes	Yes	Yes
Liquid Line Solenoid Valve	No	No	No
Motor Master® or Low–ambient Pressure Switch	Yes	No	No
Support Feet	Recommended	No	Recommended
Winter Start Control	Yes	No	No

* For tubing line sets between 80 and 200 ft. (24.38 and 60.96 m) and/or 20 ft. (6.09 m) vertical differential, refer to Residential Split–System Longline Application Guideline.

† Additional requirement for Low–Ambient Controller (full modulation feature) MotorMaster® Control.

Accessory Description and Usage (Listed Alphabetically)

1. Ball-Bearing Fan Motor

A fan motor with ball bearings which permits speed reduction while maintaining bearing lubrication.

Usage Guideline:

Required on all units when MotorMaster® —

2. Compressor Start Assist - Capacitor and Relay

Start capacitor and relay gives a ”hard” boost to compressor motor at each start up.

Usage Guideline:

Required for reciprocating compressors in the following applications:

Long line

Low ambient cooling

Hard shut off expansion valve on indoor coil

Liquid line solenoid on indoor coil

Required for single-phase scroll compressors in the following applications:

Long line

Low ambient cooling

Suggested for all compressors in areas with a history of low voltage problems.

3. Compressor Start Assist — PTC Type

Solid state electrical device which gives a ”soft” boost to the compressor at each start-up.

Usage Guideline:

Suggested in installations with marginal power supply.

4. Crankcase Heater

An electric resistance heater which mounts to the base of the compressor to keep the lubricant warm during off cycles. Improves compressor lubrication on restart and minimizes the chance of liquid slugging.

Usage Guideline:

Required in low ambient cooling applications.

Required in long line applications.

Suggested in all commercial applications.

5. Cycle Protector

The cycle protector is designed to prevent compressor short cycling. This control provides an approximate 5-minute delay after power to the compressor has been interrupted for any reason, including power outage, protector control trip, thermostat jiggling, or normal cycling.

6. Evaporator Freeze Thermostat

An SPST temperature-actuated switch that stops unit operation when evaporator reaches freeze-up conditions.

Usage Guideline:

7. Liquid-Line Solenoid Valve (LLS)

An electrically operated shutoff valve which stops and starts refrigerant liquid flow in response to compressor operation. It is to be installed at the outdoor unit to control refrigerant off cycle migration in the heating mode.

Usage Guideline:

An LLS is required in all long line heat pump applications to control refrigerant off cycle migration in the heating mode. See Long Line Guideline.

Required when low ambient kit has been added.

8. Low-Ambient Pressure Switch Kit

A long life pressure switch which is mounted to outdoor unit service valve. It is designed to cycle the outdoor fan motor in order to maintain head pressure within normal operating limits (approximately 100 psig to 225 psig). The control will maintain working head pressure at low-ambient temperatures down to 0°F when properly installed.

Usage Guideline:

A Low-Ambient Pressure Switch or MotorMaster® Low-Ambient Controller must be used when cooling operation is used at outdoor temperatures below 55°F (12.8°C).

9. MotorMaster® Low-Ambient Controller

A fan-speed control device activated by a temperature sensor, designed to control condenser fan motor speed in response to the saturated, condensing temperature during operation in cooling mode only. For outdoor temperatures down to -20°F (-28.9°C), it maintains condensing temperature at 100°F ±10°F (37.8°C ± -5.5°C).

Usage Guideline:

A MotorMaster® Low Ambient Controller or Low-Ambient Pressure Switch must be used when cooling operation is used at outdoor temperatures below 55°F (12.8°C).

Suggested for all commercial applications.

Accessory Description and Usage (Listed Alphabetically) (Continued)

10. Outdoor Air Temperature Sensor

Designed for use with Carrier Thermostats listed in this publication. This device enables the thermostat to display the outdoor temperature. This device also

is required to enable special thermostat features such as auxiliary heat lock out.

Usage Guideline:

Suggested for all Carrier thermostats listed in this publication.

11. Sound Hood

Wraparound sound reducing cover for the compressor. Reduces the sound level by about 2 dBA.

Usage Guideline:

Suggested when unit is installed closer than 15 ft (4.6 m) to quiet areas, bedrooms, etc.

Suggested when unit is installed between two houses less than 10 ft (3.0 m) apart.

12. Support Feet

Four stick-on plastic feet that raise the unit 4 in. above the mounting pad. This allows sand, dirt, and other debris to be flushed from the unit base, minimizing corrosion.

Usage Guideline:

Suggested in the following applications:

Coastal installations.

Windy areas or where debris is normally circulating.

Rooftop installations.

For improved sound ratings.

13. Thermostatic Expansion Valve (TXV)

A modulating flow-control valve which meters refrigerant liquid flow rate into the evaporator in response to the superheat of the refrigerant gas leaving the evaporator.

Kit includes valve, adapter tubes, and external equalizer tube. Hard shut off types are available.

NOTE: When using a hard shut off TXV with single phase reciprocating compressors, a Compressor Start Assist Capacitor and Relay is required.

Usage Guideline:

Required to achieve AHRI ratings in certain equipment combinations. Refer to combination ratings.

Hard shut off TXV or LLS required in air conditioner long line applications.

Required for use on all zoning systems.

14. Time-Delay Relay

An SPST delay relay which briefly continues operation of indoor blower motor to provide additional cooling after the compressor cycles off.

NOTE: Most indoor unit controls include this feature. For those that do not, use the guideline below.

Usage Guideline:

For improved efficiency ratings for certain combinations of indoor and outdoor units. Refer to AHRI Unitary Directory.

15. Winter Start Control

This control is designed to alleviate nuisance opening of the low-pressure switch by bypassing it for the first 3 minutes of operation.

ELECTRICAL DATA

UNIT SIZE – VOLTAGE, SERIES	V/PH	OPER VOLTS*		COMPR		FAN	MCA	MIN WIRE SIZE†	MIN WIRE SIZE†	MAX LENGTH ft. (m)‡	MAX LENGTH ft. (m)‡	MAX FUSE** or CKT BRK AMPS
		MAX	MIN	LRA	RLA	FLA		60° C	75° C	60° C	75° C	
18–30	208/230/1	253	197	48.0	9.0	0.5	11.7	14	14	67 (20.4)	64 (19.5)	20
24–30				58.3	13.5	0.8	17.6	14	14	44 (13.4)	42 (12.8)	30
30–30				73.0	14.1	1.1	18.7	14	14	42 (12.8)	40 (12.2)	30
36–30				79.0	16.7	1.1	21.9	12	12	57 (17.4)	54 (16.5)	35
42–30				109.0	19.9	1.2	26.0	10	10	76 (23.2)	73 (22.3)	40
48–30				117.0	21.8	1.2	28.4	10	10	70 (21.3)	66 (20.1)	40
60–31				134.0	26.3	1.2	34.1	8	10	91 (27.7)	55 (16.8)	50

* Permissible limits of the voltage range at which the unit will operate satisfactorily

† If wire is applied at ambient greater than 30°C, consult table 310–16 of the NEC (NFPA 70). The ampacity of non–metallic–sheathed cable (NM), trade name ROMEX, shall be that of 60°C conditions, per the NEC (NFPA 70) Article 336–26. If other than uncoated (no–plated), 60 or 75°C insulation, copper wire (solid wire for 10 AWG or smaller, stranded wire for larger than 10 AWG) is used, consult applicable tables of the NEC (NFPA 70).

‡ Length shown is as measured 1 way along wire path between unit and service panel for voltage drop not to exceed 2%.

** Time–Delay fuse.

FLA – Full Load Amps

LRA – Locked Rotor Amps

MCA – Minimum Circuit Amps

RLA – Rated Load Amps

NOTE: Control circuit is 24–V on all units and requires external power source. Copper wire must be used from service disconnect to unit.

All motors/compressors contain internal overload protection.

Complies with 2010 requirements of ASHRAE Standards 90.1

A-WEIGHTED SOUND POWER LEVEL (dBA)

UNIT SIZE – VOLTAGE, SERIES	STANDARD RATING (dBA)	TYPICAL OCTAVE BAND SPECTRUM (dBA, without tone adjustment)						
		125	250	500	1000	2000	4000	8000
18–30	75	50.0	59.0	65.5	69.5	64.5	61.0	55.0
24–30	75	53.0	60.0	68.0	69.5	68.0	63.0	58.5
30–30	77	57.0	66.5	71.0	73.0	69.5	66.5	59.0
36–30	77	55.0	66.5	71.0	70.5	69.0	67.0	63.5
42–30	77	57.0	60.0	66.5	69.0	68.0	64.5	58.0
48–30	80	57.0	60.0	68.0	75.0	69.0	66.5	65.5
60–31	80	59.5	65.0	71.5	72.0	67.0	65.0	62.0

NOTE: Tested in compliance with AHRI 270–2008 but not listed with AHRI.

A-WEIGHTED SOUND POWER LEVEL (dBA) WITH SOUND SHIELD

UNIT SIZE – VOLTAGE, SERIES	STANDARD RATING (dBA)	TYPICAL OCTAVE BAND SPECTRUM (dBA, without tone adjustment)						
		125	250	500	1000	2000	4000	8000
18–30	73	50.5	60.0	66.0	68.0	64.0	60.5	54.0
24–30	73	53.5	60.0	67.0	68.5	66.5	61.5	56.0
30–30	77	57.5	66.0	71.0	72.5	69.0	65.5	57.5
36–30	76	55.5	66.0	70.0	69.5	68.5	66.0	61.5
42–30	74	57.0	60.5	66.5	67.5	67.0	62.5	56.5
48–30	78	57.0	60.5	67.5	74.0	68.0	64.0	62.5
60–31	77	59.5	65.0	71.0	68.5	66.0	61.5	58.5

NOTE: Tested in compliance with AHRI 270–2008 but not listed with AHRI.

CHARGING SUBCOOLING (TXV-TYPE EXPANSION DEVICE)

UNIT SIZE – VOLTAGE, SERIES	REQUIRED SUBCOOLING °F (°C)
18–30	8 (4.4)
24–30	11 (6.1)
30–30	9 (5.0)
36–30	10 (5.6)
42–30	11 (6.1)
48–30	12 (6.7)
60–31	11 (6.1)

DIMENSIONS - ENGLISH

UNIT	SERIES	ELECTRICAL CHARACTERISTICS				A	B	C	D	E	F	G	K	L	M	N	P	OPERATING WEIGHT (lbs)	SHIPPING WEIGHT (lbs)	SHIPPING DIMENSIONS (L x W x H)
24ABB318	0	X	O	O	O	25 3/4"	31 13/16"	3 3/4"	5/8"	4 7/16"	21 1/4"	9 1/8"	2 13/16"	1/2"	15 3/8"	12 1/2"	14 3/4"	128	159	26 7/8" X 30 1/16" X 35 15/16"
24ABB324	0	X	O	O	O	25 3/4"	35 1/4"	3 3/4"	5/8"	4 7/16"	21 1/4"	9 1/8"	2 13/16"	1/2"	13"	14 1/4"	15 7/8"	133	167	26 7/8" X 30 1/16" X 39 3/8"
24ABB330	0	X	O	O	O	31 3/16"	32 5/16"	3 3/4"	3/4"	6 9/16"	24 11/16"	9 1/8"	2 13/16"	1/2"	16 1/8"	15"	15 7/8"	155	193	32 3/8" X 35 1/2" X 35 15/16"
24ABB336	0	X	O	O	O	31 3/16"	39 1/8"	3 3/4"	3/4"	6 9/16"	24 11/16"	9 1/8"	2 13/16"	1/2"	13 5/8"	15 3/4"	18 1/2"	167	205	32 3/8" X 35 1/2" X 42 3/4"
24ABB342	0	X	O	O	O	35"	28 15/16"	3 7/8"	7/8"	6 9/16"	28 7/16"	9 1/8"	2 15/16"	5/8"	15 3/4"	15"	12 3/8"	188	225	36 1/8" X 39 5/16" X 32 9/16"
24ABB348	0	X	O	O	O	35"	32 5/16"	3 7/8"	7/8"	6 9/16"	28 7/16"	9 1/8"	2 15/16"	5/8"	16 1/4"	16 3/8"	14 1/4"	197	235	36 1/8" X 39 5/16" X 35 15/16"
24ABB360	1	X	O	O	O	35"	28 15/16"	3 7/8"	7/8"	6 9/16"	28 7/16"	9 1/8"	2 15/16"	5/8"	16 3/8"	16 5/8"	12 1/4"	227	267	36 1/8" X 39 5/16" X 32 9/16"

208-230-1-60	230-1-60	208/230-3-60	460-3-60

X = YES
O = NO

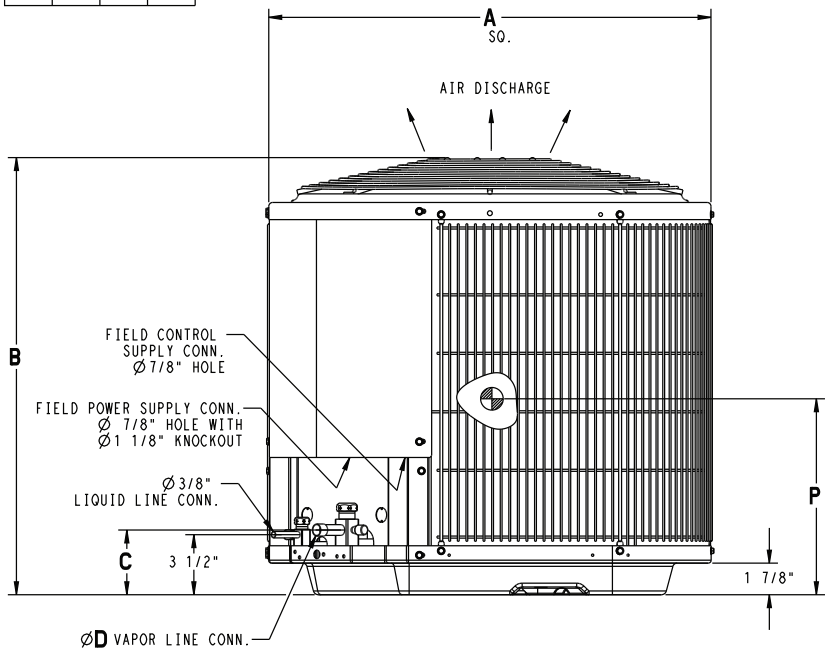

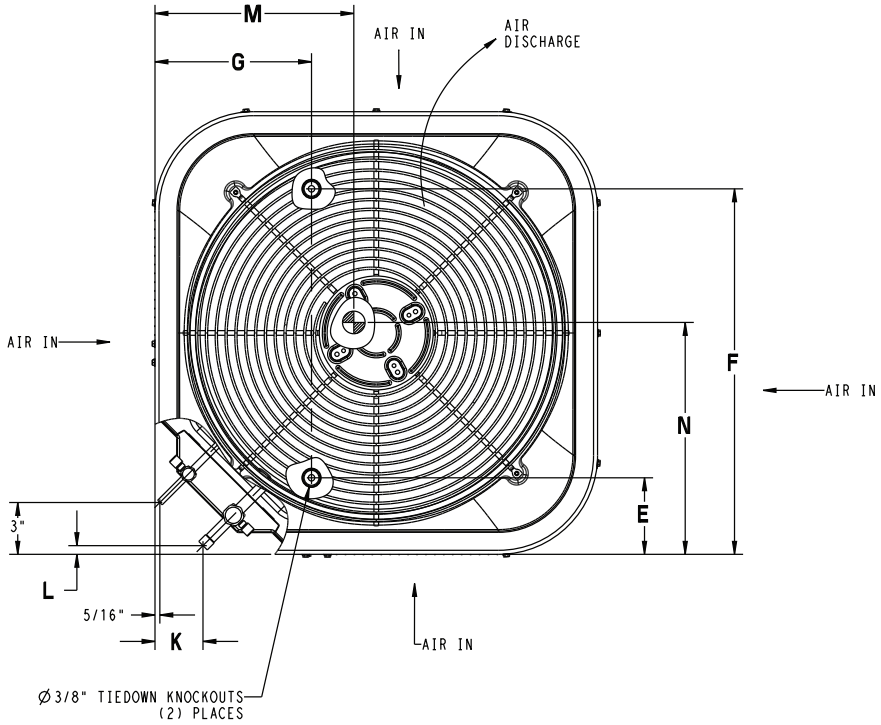

UNIT SIZE	MINIMUM MOUNTING PAD DIMENSIONS
-	23 1/2" X 23 1/2"
18,24	26" X 26"
30,36	31 1/2" X 31 1/2"
42,48,60	35" X 35"

DIMENSIONS - SI

UNIT	SERIES	ELECTRICAL CHARACTERISTICS				A	B	C	D	E	F	G	K	L	M	N	P	OPERATING WEIGHT (Kgs)	SHIPPING WEIGHT (Kgs)	SHIPPING DIMENSIONS (L x W x H)
24ABB318	0	X	O	O	O	654.0	808.5	95.6	15.9	113.0	539.9	231.3	70.9	12.8	390.5	317.5	374.6	58.0	72.1	682.8 X 762.8 X 913.2
24ABB324	0	X	O	O	O	654.0	894.8	95.6	15.9	113.0	539.9	231.3	70.9	12.8	330.2	362.0	403.2	60.3	75.7	682.8 X 762.8 X 999.5
24ABB330	0	X	O	O	O	792.5	821.2	95.6	19.1	166.7	626.3	231.3	70.9	12.8	409.6	381.0	403.2	70.3	87.5	821.2 X 901.2 X 913.2
24ABB336	0	X	O	O	O	792.5	993.9	95.6	19.1	166.7	626.3	231.3	70.9	12.8	346.1	400.0	469.9	75.7	93.0	821.2 X 901.2 X 1085.9
24ABB342	0	X	O	O	O	889.0	734.8	97.9	22.2	166.7	722.8	231.3	74.5	16.3	400.0	381.0	314.3	85.3	102.0	917.7 X 997.7 X 826.8
24ABB348	0	X	O	O	O	889.0	821.2	97.9	22.2	166.7	722.8	231.3	74.5	16.3	412.8	415.9	362.0	89.4	106.6	917.7 X 997.7 X 913.2
24ABB360	1	X	O	O	O	889.0	734.8	97.9	22.2	166.7	722.8	231.3	74.5	16.3	415.9	422.3	311.2	103.0	121.1	917.7 X 997.7 X 826.8
		208-230-1-60	230-1-60	208/230-3-60	460-3-60															

X = YES
O = NO

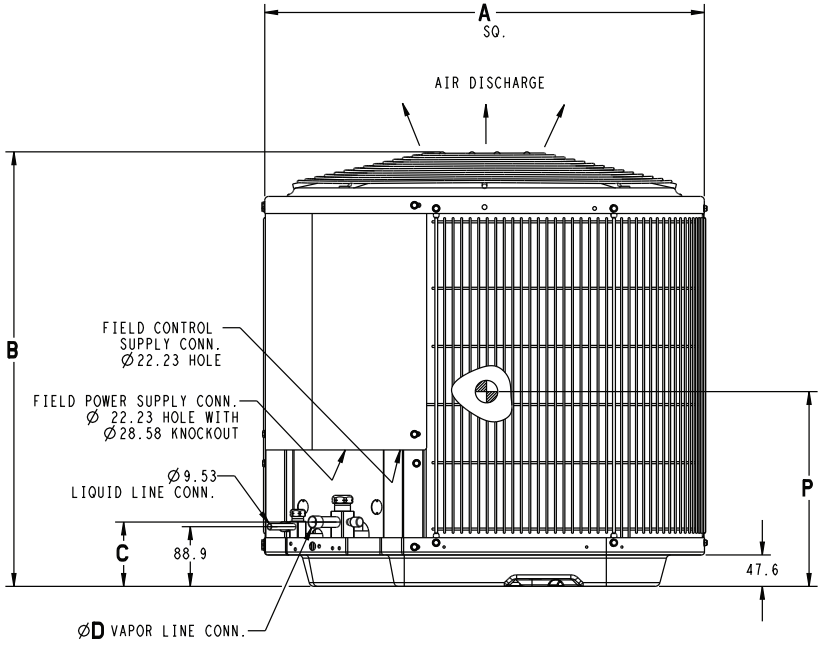

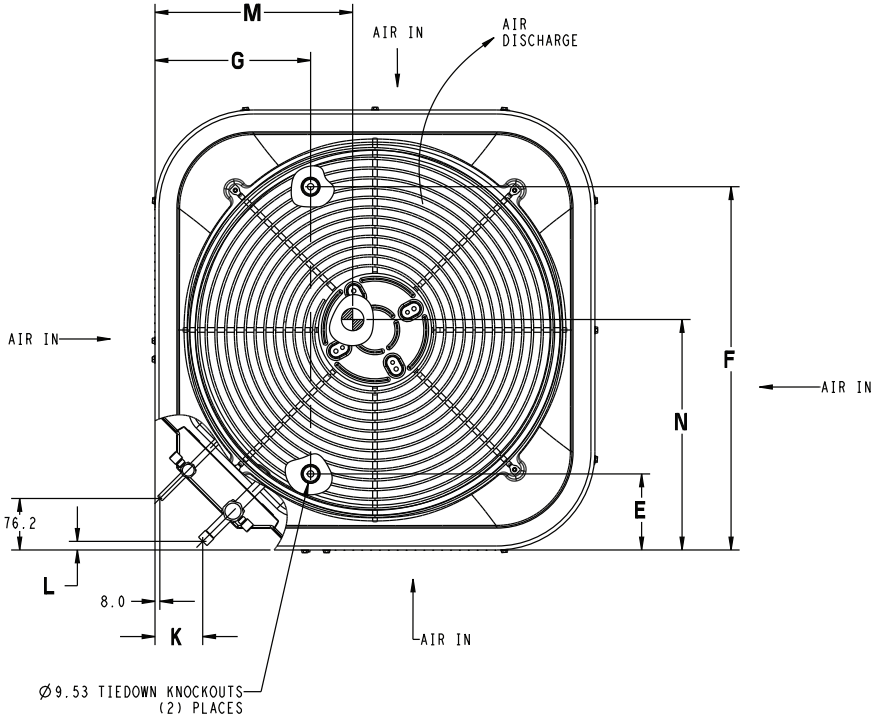

UNIT SIZE	MINIMUM MOUNTING PAD DIMENSIONS
-	596.9 X 596.9
18,24	660.4 X 660.4
30,36	800.1 X 800.1
42,48,60	889.0 X 889.0

CLEARANCES

Clearances (various examples)

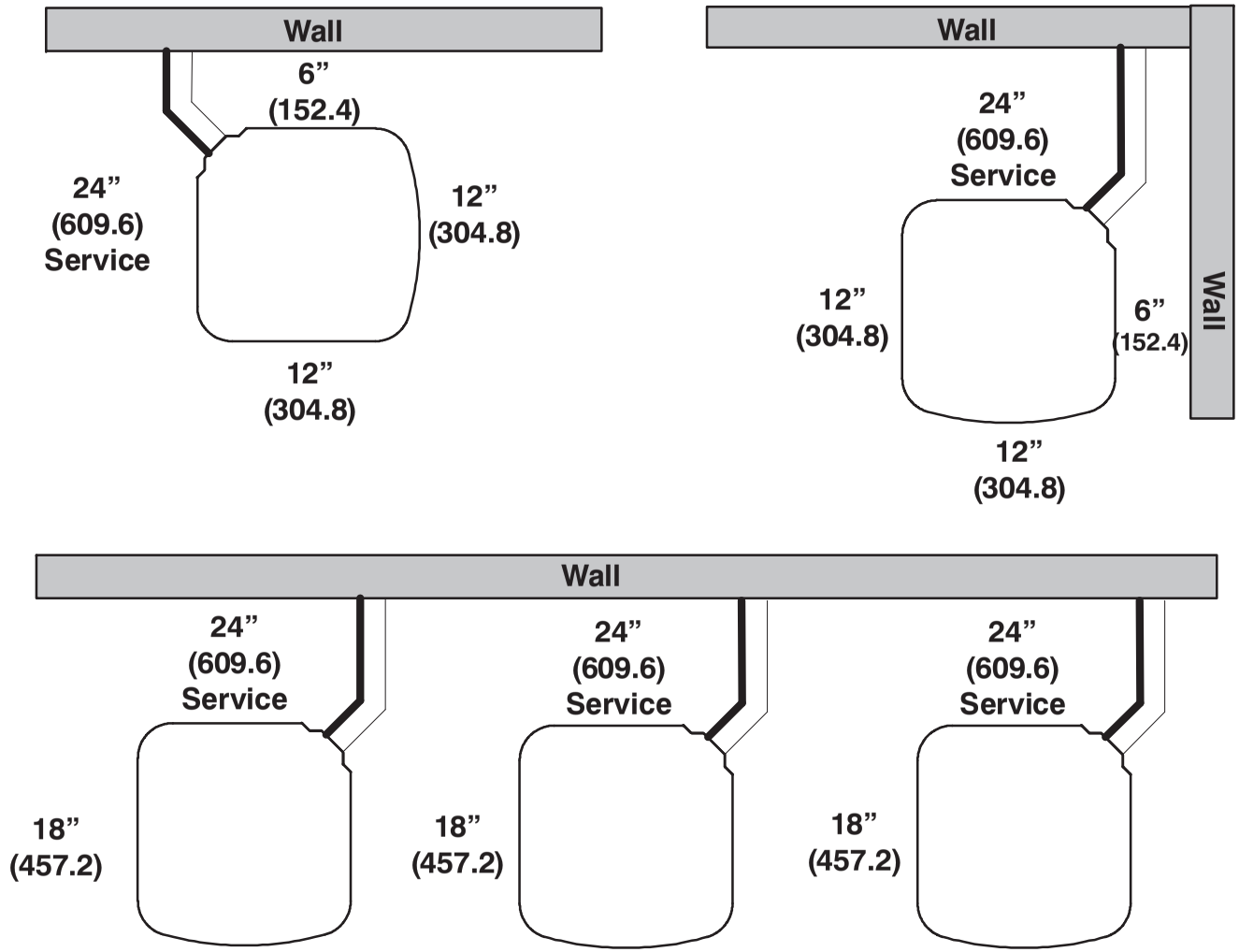

Note: Numbers in ( ) = mm

A07832

24ABB3C

COMBINATION RATINGS

AHRI Ref. No.	Model Number	Indoor Model	Furnace Model	Capacity	EER	SEER
3040311	24ABB318C30	†CAP**1814A**+TDR		17,700	11.0	13.0
3040312	24ABB318C30	CAP**1814A**	58CV(A,X)070−12	17,500	12.0	14.0
3040313	24ABB318C30	CAP**1814A**	58PH*045−08	17,800	12.2	14.5
4733661	24ABB318C30	CAP**1814A**	59*P5A040E14**10	17,300	11.5	14.0
3040315	24ABB318C30	CAP**2414A**	58CV(A,X)070−12	17,800	12.2	14.5
3040316	24ABB318C30	CAP**2414A**	58PH*045−08	18,000	12.2	14.5
4733662	24ABB318C30	CAP**2414A**	59*P5A040E14**10	17,700	11.8	14.2
3040314	24ABB318C30	CAP**2414A**+TDR		18,000	11.2	13.2
3040319	24ABB318C30	CAP**2417A**	58CV(A,X)090−16	17,900	12.2	14.5
3612938	24ABB318C30	CAP**2417A**	58ME(B,C)040−12	17,800	12.0	14.5
3098924	24ABB318C30	CAP**2417A**	58ME(B,C)060−12	17,800	12.0	14.5
3098923	24ABB318C30	CAP**2417A**	58MEB040−12	17,800	12.0	14.5
3040318	24ABB318C30	CAP**2417A**	58MV(B,C)060−14	17,800	12.2	14.5
3672945	24ABB318C30	CAP**2417A**	58UVB060−14	17,800	12.2	14.5
4129894	24ABB318C30	CAP**2417A**	58VLR105−12	18,000	12.0	14.5
4129893	24ABB318C30	CAP**2417A**	58VMR105−12	17,800	12.0	14.5
4733663	24ABB318C30	CAP**2417A**	59*N*A060V17**14	17,800	12.0	14.5
4733664	24ABB318C30	CAP**2417A**	59*N*A080V17**14	17,700	12.0	14.5
4733665	24ABB318C30	CAP**2417A**	59*P5A040E14**10	17,700	12.0	14.5
4255184	24ABB318C30	CAP**2417A**	OVLAAB036098	17,900	12.0	14.5
4129895	24ABB318C30	CAP**2417A**	OVMAAB036098	18,000	12.0	14.5
3040317	24ABB318C30	CAP**2417A**+TDR		18,000	11.2	13.2
3040333	24ABB318C30	CNPH*2417A**	58CV(A,X)070−12	17,800	12.2	14.5
3040334	24ABB318C30	CNPH*2417A**	58CV(A,X)090−16	17,900	12.2	14.5
4129915	24ABB318C30	CNPH*2417A**	58HDV040−−12	18,000	12.0	14.0
4129916	24ABB318C30	CNPH*2417A**	58HDV060−−12	18,000	12.0	14.0
3612940	24ABB318C30	CNPH*2417A**	58ME(B,C)040−12	17,800	12.0	14.5
3098928	24ABB318C30	CNPH*2417A**	58ME(B,C)060−12	17,800	12.0	14.5
3098927	24ABB318C30	CNPH*2417A**	58MEB040−12	17,800	12.0	14.5
3040331	24ABB318C30	CNPH*2417A**	58MV(B,C)060−14	17,800	12.2	14.5
3040332	24ABB318C30	CNPH*2417A**	58MV(B,C)080−14	17,800	12.2	14.5
3040335	24ABB318C30	CNPH*2417A**	58PH*045−08	18,000	12.2	14.5
4129906	24ABB318C30	CNPH*2417A**	58VLR105−12	18,000	12.0	14.5
4129905	24ABB318C30	CNPH*2417A**	58VMR105−12	17,700	12.0	14.5
4733674	24ABB318C30	CNPH*2417A**	59*N*A060V17**14	17,800	12.0	14.5
4733675	24ABB318C30	CNPH*2417A**	59*N*A080V17**14	17,700	12.0	14.5
4733676	24ABB318C30	CNPH*2417A**	59*P5A040E14**10	17,700	11.8	14.2
4255187	24ABB318C30	CNPH*2417A**	OVLAAB036098	17,900	12.0	14.5
4129907	24ABB318C30	CNPH*2417A**	OVMAAB036098	18,000	12.0	14.5
3040329	24ABB318C30	CNPH*2417A**+TDR		18,000	11.2	13.2
3040321	24ABB318C30	CNPV*1814A**	58CV(A,X)070−12	17,500	12.0	14.0
3040322	24ABB318C30	CNPV*1814A**	58PH*045−08	17,900	12.2	14.5
4733666	24ABB318C30	CNPV*1814A**	59*P5A040E14**10	17,400	11.8	14.2
3040320	24ABB318C30	CNPV*1814A**+TDR		17,700	11.0	13.0
3689742	24ABB318C30	CNPV*1917A**	58CV(A,X)090−16	18,000	12.0	14.5
3689744	24ABB318C30	CNPV*1917A**	58ME(B,C)060−12	18,000	12.0	14.5
3689743	24ABB318C30	CNPV*1917A**	58MEB040−12	18,000	12.0	14.5
3689741	24ABB318C30	CNPV*1917A**	58MV(B,C)060−14	18,000	12.0	14.5
3689756	24ABB318C30	CNPV*1917A**	58UVB060−14	18,000	12.0	14.5
4129898	24ABB318C30	CNPV*1917A**	58VLR105−12	18,000	12.0	15.0
4129897	24ABB318C30	CNPV*1917A**	58VMR105−12	17,800	12.0	14.5
4733667	24ABB318C30	CNPV*1917A**	59*N*A060V17**14	17,900	12.0	14.5
4733668	24ABB318C30	CNPV*1917A**	59*N*A080V17**14	17,800	12.0	14.5
4733669	24ABB318C30	CNPV*1917A**	59*P5A040E14**10	17,900	12.0	14.5
4255185	24ABB318C30	CNPV*1917A**	OVLAAB036098	18,000	12.0	14.5
4129899	24ABB318C30	CNPV*1917A**	OVMAAB036098	18,000	12.0	14.5
3689740	24ABB318C30	CNPV*1917A**+TDR		18,000	11.0	13.0
3040324	24ABB318C30	CNPV*2414A**	58CV(A,X)070−12	17,800	12.2	14.5
3040325	24ABB318C30	CNPV*2414A**	58PH*045−08	18,000	12.2	14.5
4733670	24ABB318C30	CNPV*2414A**	59*P5A040E14**10	17,700	11.8	14.2
3040323	24ABB318C30	CNPV*2414A**+TDR		18,000	11.2	13.2
3040328	24ABB318C30	CNPV*2417A**	58CV(A,X)090−16	17,900	12.2	14.5
4129913	24ABB318C30	CNPV*2417A**	58HDV040−−12	18,000	12.0	14.0
4129914	24ABB318C30	CNPV*2417A**	58HDV060−−12	18,000	12.0	14.0
3612939	24ABB318C30	CNPV*2417A**	58ME(B,C)040−12	17,800	12.0	14.5
3098926	24ABB318C30	CNPV*2417A**	58ME(B,C)060−12	17,800	12.0	14.5
3098925	24ABB318C30	CNPV*2417A**	58MEB040−12	17,800	12.0	14.5
3040327	24ABB318C30	CNPV*2417A**	58MV(B,C)060−14	17,800	12.2	14.5
3756741	24ABB318C30	CNPV*2417A**	58UVB060−14	17,800	12.2	14.5
4129902	24ABB318C30	CNPV*2417A**	58VLR105−12	18,000	12.0	14.5
4129901	24ABB318C30	CNPV*2417A**	58VMR105−12	17,700	12.0	14.5
4733671	24ABB318C30	CNPV*2417A**	59*N*A060V17**14	17,800	12.0	14.5
4733672	24ABB318C30	CNPV*2417A**	59*N*A080V17**14	17,700	12.0	14.5

See notes on page 36

COMBINATION RATINGS

AHRI Ref. No.	Model Number	Indoor Model	Furnace Model	Capacity	EER	SEER
4733673	24ABB318C30	CNPV*2417A**	59*P5A040E14**10	17,700	11.8	14.2
4255186	24ABB318C30	CNPV*2417A**	OVLAAB036098	17,900	12.0	14.5
4129903	24ABB318C30	CNPV*2417A**	OVMAAB036098	18,000	12.0	14.5
3040326	24ABB318C30	CNPV*2417A**+TDR		18,000	11.2	13.2
3040341	24ABB318C30	CSPH*2412A**	58CV(A,X)070−12	17,800	12.2	14.5
3040342	24ABB318C30	CSPH*2412A**	58CV(A,X)090−16	18,000	12.2	14.5
3689745	24ABB318C30	CSPH*2412A**	58HDV040−−12	18,400	12.0	14.5
3689746	24ABB318C30	CSPH*2412A**	58HDV060−−12	18,400	12.0	14.5
3612941	24ABB318C30	CSPH*2412A**	58ME(B,C)040−12	17,800	12.0	14.5
3098930	24ABB318C30	CSPH*2412A**	58ME(B,C)060−12	17,800	12.0	14.5
3098929	24ABB318C30	CSPH*2412A**	58MEB040−12	17,800	12.0	14.5
3040339	24ABB318C30	CSPH*2412A**	58MV(B,C)060−14	18,000	12.2	14.5
3040340	24ABB318C30	CSPH*2412A**	58MV(B,C)080−14	17,900	12.2	14.5
3040343	24ABB318C30	CSPH*2412A**	58PH*045−08	18,000	12.2	14.5
4129910	24ABB318C30	CSPH*2412A**	58VLR105−12	18,000	12.0	14.5
4129909	24ABB318C30	CSPH*2412A**	58VMR105−12	17,800	12.0	14.5
4733677	24ABB318C30	CSPH*2412A**	59*N*A060V17**14	17,900	12.0	14.5
4733678	24ABB318C30	CSPH*2412A**	59*N*A080V17**14	17,800	12.0	14.5
4733679	24ABB318C30	CSPH*2412A**	59*P5A040E14**10	17,700	11.8	14.2
4255188	24ABB318C30	CSPH*2412A**	OVLAAB036098	18,000	12.0	14.5
4129911	24ABB318C30	CSPH*2412A**	OVMAAB036098	18,000	12.0	14.5
3040337	24ABB318C30	CSPH*2412A**+TDR		18,000	11.2	13.2
4208532	24ABB318C30	FB4CNF018		17,500	11.0	13.0
4208533	24ABB318C30	FB4CNF018+TXV		17,500	11.0	13.5
4208534	24ABB318C30	FB4CNF024		17,500	11.0	13.0
4208535	24ABB318C30	FB4CNF024+TXV		17,500	11.0	13.5
3040348	24ABB318C30	FE4ANF002+UI		17,300	12.2	14.5
3040349	24ABB318C30	FF1ENP018		17,700	11.0	13.0
3468779	24ABB318C30	FF1ENP019		18,000	12.0	14.0
3040350	24ABB318C30	FF1ENP024		17,900	11.0	13.0
3468780	24ABB318C30	FF1ENP025		18,000	12.2	14.5
3404501	24ABB318C30	FV4CNF002		17,300	12.2	14.5
3752124	24ABB318C30	FX4DN(B,F)031		18,000	12.0	14.5
3752122	24ABB318C30	FX4DNF019		18,000	12.0	14.5
3752123	24ABB318C30	FX4DNF025		18,000	12.0	14.5
4208536	24ABB318C30	FY5BNF018		17,500	11.0	13.0
4208537	24ABB318C30	FY5BNF018+TXV		17,500	11.0	13.0
4208538	24ABB318C30	FY5BNF024		17,500	11.0	13.0
4208539	24ABB318C30	FY5BNF024+TXV		17,500	11.0	13.0
3040352	24ABB324C30	†CAP**2414A**+TDR		22,600	10.7	13.0
3040353	24ABB324C30	CAP**2414A**	58CV(A,X)070−12	22,400	11.7	14.0
3040354	24ABB324C30	CAP**2414A**	58PH*045−08	22,600	11.7	14.0
4733680	24ABB324C30	CAP**2414A**	59*P5A040E14**10	22,600	11.0	13.3
3040357	24ABB324C30	CAP**2417A**	58CV(A,X)090−16	22,600	12.0	14.0
3612942	24ABB324C30	CAP**2417A**	58ME(B,C)040−12	22,600	12.0	14.5
3098932	24ABB324C30	CAP**2417A**	58ME(B,C)060−12	22,600	12.0	14.5
3098933	24ABB324C30	CAP**2417A**	58ME(B,C)080−12	22,600	12.0	14.5
3098931	24ABB324C30	CAP**2417A**	58MEB040−12	22,600	12.0	14.5
3040356	24ABB324C30	CAP**2417A**	58MV(B,C)060−14	22,800	12.0	14.0
3672948	24ABB324C30	CAP**2417A**	58UVB060−14	22,800	12.0	14.0
4129918	24ABB324C30	CAP**2417A**	58VLR105−12	22,600	11.7	14.0
4129917	24ABB324C30	CAP**2417A**	58VMR105−12	22,400	11.7	14.0
4733681	24ABB324C30	CAP**2417A**	59*N*A060V17**14	22,400	11.8	14.2
4733682	24ABB324C30	CAP**2417A**	59*N*A080V17**14	22,400	11.8	14.2
4733683	24ABB324C30	CAP**2417A**	59*P5A040E14**10	22,600	11.0	13.3
4733684	24ABB324C30	CAP**2417A**	59*P5A060E17**14	22,400	11.8	14.2
4255189	24ABB324C30	CAP**2417A**	OVLAAB036098	22,600	11.7	14.0
4129919	24ABB324C30	CAP**2417A**	OVMAAB036098	22,600	11.7	14.0
4129921	24ABB324C30	CAP**2417A**	OVMAAB042112	22,600	11.7	14.0
3040355	24ABB324C30	CAP**2417A**+TDR		22,600	10.7	13.0
3040359	24ABB324C30	CAP**3014A**	58CV(A,X)070−12	22,600	12.0	14.0
3040360	24ABB324C30	CAP**3014A**	58PH*045−08	23,000	12.0	14.0
4733685	24ABB324C30	CAP**3014A**	59*P5A040E14**10	22,800	11.0	13.3
3040358	24ABB324C30	CAP**3014A**+TDR		23,000	10.7	13.0
3040363	24ABB324C30	CAP**3017A**	58CV(A,X)090−16	22,800	12.0	14.5
3612943	24ABB324C30	CAP**3017A**	58ME(B,C)040−12	22,600	12.0	14.5
3098935	24ABB324C30	CAP**3017A**	58ME(B,C)060−12	22,600	12.0	14.5
3098936	24ABB324C30	CAP**3017A**	58ME(B,C)080−12	22,600	12.0	14.5
3098934	24ABB324C30	CAP**3017A**	58MEB040−12	22,600	12.0	14.5
3040362	24ABB324C30	CAP**3017A**	58MV(B,C)060−14	23,000	12.2	14.5
3672949	24ABB324C30	CAP**3017A**	58UVB060−14	23,000	12.2	14.5
4129923	24ABB324C30	CAP**3017A**	58VLR105−12	22,800	12.0	14.5

See notes on page 36

COMBINATION RATINGS

AHRI Ref. No.	Model Number	Indoor Model	Furnace Model	Capacity	EER	SEER
4129922	24ABB324C30	CAP**3017A**	58VMR105−12	22,600	12.0	14.5
4733686	24ABB324C30	CAP**3017A**	59*N*A060V17**14	22,600	11.8	14.2
4733687	24ABB324C30	CAP**3017A**	59*N*A080V17**14	22,600	12.0	14.5
4733688	24ABB324C30	CAP**3017A**	59*P5A040E14**10	22,800	11.2	13.5
4733689	24ABB324C30	CAP**3017A**	59*P5A060E17**14	22,800	12.0	14.5
4255190	24ABB324C30	CAP**3017A**	OVLAAB036098	22,800	11.7	14.0
4129924	24ABB324C30	CAP**3017A**	OVMAAB036098	22,800	11.7	14.0
4129926	24ABB324C30	CAP**3017A**	OVMAAB042112	22,800	12.0	14.5
3040361	24ABB324C30	CAP**3017A**+TDR		23,000	10.7	13.0
3689738	24ABB324C30	CAP**3619A**	58HDV040−−12	23,000	11.5	14.0
3689739	24ABB324C30	CAP**3619A**	58HDV060−−12	23,000	11.5	14.0
3689737	24ABB324C30	CAP**3619A**+TDR		23,000	11.0	13.0
3040383	24ABB324C30	CNPH*2417A**	58CV(A,X)070−12	22,400	11.7	14.0
3040384	24ABB324C30	CNPH*2417A**	58CV(A,X)090−16	22,600	12.0	14.0
3040385	24ABB324C30	CNPH*2417A**	58CV(A,X)110−20	22,600	11.7	14.0
3040386	24ABB324C30	CNPH*2417A**	58CV(A,X)135−22	22,600	11.7	14.0
3040387	24ABB324C30	CNPH*2417A**	58CV(A,X)155−22	22,600	11.7	14.0
4129973	24ABB324C30	CNPH*2417A**	58HDV060−−12	22,600	11.5	13.5
4129974	24ABB324C30	CNPH*2417A**	58HDV080−−20	23,000	11.7	14.0
4129975	24ABB324C30	CNPH*2417A**	58HDV100−−20	22,800	11.7	14.0
3612946	24ABB324C30	CNPH*2417A**	58ME(B,C)040−12	22,600	12.0	14.5
3098944	24ABB324C30	CNPH*2417A**	58ME(B,C)060−12	22,600	12.0	14.5
3098945	24ABB324C30	CNPH*2417A**	58ME(B,C)080−12	22,600	12.0	14.5
3098943	24ABB324C30	CNPH*2417A**	58MEB040−12	22,600	12.0	14.5
3040378	24ABB324C30	CNPH*2417A**	58MV(B,C)060−14	22,800	11.7	14.0
3040379	24ABB324C30	CNPH*2417A**	58MV(B,C)080−14	22,400	11.7	14.0
3040380	24ABB324C30	CNPH*2417A**	58MV(B,C)080−20	22,200	11.7	14.0
3040381	24ABB324C30	CNPH*2417A**	58MV(B,C)100−20	22,600	11.7	14.0
3040382	24ABB324C30	CNPH*2417A**	58MV(B,C)120−20	22,600	12.0	14.0
3040388	24ABB324C30	CNPH*2417A**	58PH*045−08	22,600	11.7	14.0
4129943	24ABB324C30	CNPH*2417A**	58VLR105−12	22,600	11.7	14.0
4129942	24ABB324C30	CNPH*2417A**	58VMR105−12	22,400	11.7	14.0
4733704	24ABB324C30	CNPH*2417A**	59*N*A060V17**14	22,400	11.5	14.0
4733705	24ABB324C30	CNPH*2417A**	59*N*A080V17**14	22,200	11.8	14.2
4733706	24ABB324C30	CNPH*2417A**	59*N*A100V21**20	22,600	11.8	14.2
4733707	24ABB324C30	CNPH*2417A**	59*N*A120V24**22	22,600	11.8	14.2
4733708	24ABB324C30	CNPH*2417A**	59*P5A040E14**10	22,600	11.0	13.0
4733709	24ABB324C30	CNPH*2417A**	59*P5A060E17**14	22,400	11.8	14.2
4255196	24ABB324C30	CNPH*2417A**	OVLAAB036098	22,600	11.7	14.0
4129944	24ABB324C30	CNPH*2417A**	OVMAAB036098	22,600	11.5	13.5
4129946	24ABB324C30	CNPH*2417A**	OVMAAB042112	22,600	11.7	14.0
3040376	24ABB324C30	CNPH*2417A**+TDR		22,600	10.7	13.0
3040396	24ABB324C30	CNPH*3017A**	58CV(A,X)070−12	22,800	12.0	14.0
3040397	24ABB324C30	CNPH*3017A**	58CV(A,X)090−16	22,800	12.0	14.5
3040398	24ABB324C30	CNPH*3017A**	58CV(A,X)110−20	22,800	12.0	14.5
3040399	24ABB324C30	CNPH*3017A**	58CV(A,X)135−22	22,800	12.2	14.5
3040400	24ABB324C30	CNPH*3017A**	58CV(A,X)155−22	22,800	12.0	14.5
4129976	24ABB324C30	CNPH*3017A**	58HDV040−−12	23,000	11.7	14.0
4129977	24ABB324C30	CNPH*3017A**	58HDV060−−12	23,200	11.7	14.0
4129978	24ABB324C30	CNPH*3017A**	58HDV100−−20	23,400	12.0	14.5
3612947	24ABB324C30	CNPH*3017A**	58ME(B,C)040−12	22,600	12.0	14.5
3098947	24ABB324C30	CNPH*3017A**	58ME(B,C)060−12	22,600	12.0	14.5
3098948	24ABB324C30	CNPH*3017A**	58ME(B,C)080−12	22,600	12.0	14.5
3098946	24ABB324C30	CNPH*3017A**	58MEB040−12	22,600	12.0	14.5
3040391	24ABB324C30	CNPH*3017A**	58MV(B,C)060−14	23,000	12.2	14.5
3040392	24ABB324C30	CNPH*3017A**	58MV(B,C)080−14	22,800	12.0	14.5
3040393	24ABB324C30	CNPH*3017A**	58MV(B,C)080−20	22,600	12.0	14.0
3040394	24ABB324C30	CNPH*3017A**	58MV(B,C)100−20	22,800	12.0	14.5
3040395	24ABB324C30	CNPH*3017A**	58MV(B,C)120−20	23,000	12.2	14.5
3040401	24ABB324C30	CNPH*3017A**	58PH*045−08	23,000	12.0	14.0
4129948	24ABB324C30	CNPH*3017A**	58VLR105−12	23,000	12.0	14.5
4129947	24ABB324C30	CNPH*3017A**	58VMR105−12	22,600	11.7	14.0
4733710	24ABB324C30	CNPH*3017A**	59*N*A060V17**14	22,600	12.0	14.5
4733711	24ABB324C30	CNPH*3017A**	59*N*A080V17**14	22,600	12.0	14.5
4733712	24ABB324C30	CNPH*3017A**	59*N*A100V21**20	23,000	12.0	14.5
4733713	24ABB324C30	CNPH*3017A**	59*N*A120V24**22	22,800	12.0	14.5
4733714	24ABB324C30	CNPH*3017A**	59*P5A040E14**10	22,800	11.2	13.5
4733715	24ABB324C30	CNPH*3017A**	59*P5A060E17**14	22,800	12.0	14.5
4255197	24ABB324C30	CNPH*3017A**	OVLAAB036098	22,800	11.7	14.0
4129949	24ABB324C30	CNPH*3017A**	OVMAAB036098	22,800	11.7	14.0
4129951	24ABB324C30	CNPH*3017A**	OVMAAB042112	22,800	12.0	14.5
3040389	24ABB324C30	CNPH*3017A**+TDR		23,000	10.7	13.0
3689718	24ABB324C30	CNPH*3117A**	58CV(A,X)070−12	23,000	12.0	14.5

See notes on page 36

COMBINATION RATINGS

AHRI Ref. No.	Model Number	Indoor Model	Furnace Model	Capacity	EER	SEER
3689719	24ABB324C30	CNPH*3117A**	58CV(A,X)090−16	23,000	12.0	14.5
3689720	24ABB324C30	CNPH*3117A**	58CV(A,X)110−20	23,000	12.0	14.5
3689721	24ABB324C30	CNPH*3117A**	58CV(A,X)135−22	23,000	12.0	14.5
3689722	24ABB324C30	CNPH*3117A**	58CV(A,X)155−22	23,000	12.0	14.5
3689727	24ABB324C30	CNPH*3117A**	58HDV040−−12	23,000	12.0	14.5
3689728	24ABB324C30	CNPH*3117A**	58HDV060−−12	23,000	12.0	14.5
3689729	24ABB324C30	CNPH*3117A**	58HDV100−−20	23,000	12.0	14.5
3689725	24ABB324C30	CNPH*3117A**	58ME(B,C)060−12	23,000	12.0	14.5
3689726	24ABB324C30	CNPH*3117A**	58ME(B,C)080−12	23,000	12.0	14.5
3689724	24ABB324C30	CNPH*3117A**	58MEB040−12	23,000	12.0	14.5
3689713	24ABB324C30	CNPH*3117A**	58MV(B,C)060−14	23,000	12.0	14.5
3689714	24ABB324C30	CNPH*3117A**	58MV(B,C)080−14	23,000	12.0	14.5
3689715	24ABB324C30	CNPH*3117A**	58MV(B,C)080−20	23,000	12.0	14.5
3689716	24ABB324C30	CNPH*3117A**	58MV(B,C)100−20	23,000	12.0	14.5
3689717	24ABB324C30	CNPH*3117A**	58MV(B,C)120−20	23,000	12.0	14.5
3689712	24ABB324C30	CNPH*3117A**	58MVB040−14	23,000	12.0	14.5
3689723	24ABB324C30	CNPH*3117A**	58PH*045−08	23,000	12.0	14.5
4129953	24ABB324C30	CNPH*3117A**	58VLR105−12	23,400	12.0	14.5
4129952	24ABB324C30	CNPH*3117A**	58VMR105−12	23,000	12.0	14.5
4733716	24ABB324C30	CNPH*3117A**	59*N*A060V17**14	23,000	12.0	14.5
4733717	24ABB324C30	CNPH*3117A**	59*N*A080V17**14	23,000	12.0	14.5
4733718	24ABB324C30	CNPH*3117A**	59*N*A100V21**20	23,400	12.0	14.5
4733719	24ABB324C30	CNPH*3117A**	59*N*A120V24**22	23,200	12.4	15.0
4733720	24ABB324C30	CNPH*3117A**	59*P5A040E14**10	23,400	11.4	13.7
4733721	24ABB324C30	CNPH*3117A**	59*P5A060E17**14	23,200	12.0	14.5
4255198	24ABB324C30	CNPH*3117A**	OVLAAB036098	23,400	12.0	14.5
4129954	24ABB324C30	CNPH*3117A**	OVMAAB036098	23,400	12.0	14.5
4129956	24ABB324C30	CNPH*3117A**	OVMAAB042112	23,200	12.0	14.5
3689711	24ABB324C30	CNPH*3117A**+TDR		23,000	11.0	13.0
3040365	24ABB324C30	CNPV*2414A**	58CV(A,X)070−12	22,400	11.7	14.0
3040366	24ABB324C30	CNPV*2414A**	58PH*045−08	22,600	11.7	14.0
4733690	24ABB324C30	CNPV*2414A**	59*P5A040E14**10	22,600	11.0	13.0
3040364	24ABB324C30	CNPV*2414A**+TDR		22,600	10.7	13.0
3040369	24ABB324C30	CNPV*2417A**	58CV(A,X)090−16	22,600	12.0	14.0
4129967	24ABB324C30	CNPV*2417A**	58HDV040−−12	22,600	11.5	13.5
4129968	24ABB324C30	CNPV*2417A**	58HDV060−−12	22,600	11.5	13.5
3612944	24ABB324C30	CNPV*2417A**	58ME(B,C)040−12	22,600	12.0	14.5
3098938	24ABB324C30	CNPV*2417A**	58ME(B,C)060−12	22,600	12.0	14.5
3098939	24ABB324C30	CNPV*2417A**	58ME(B,C)080−12	22,600	12.0	14.5
3098937	24ABB324C30	CNPV*2417A**	58MEB040−12	22,600	12.0	14.5
3040368	24ABB324C30	CNPV*2417A**	58MV(B,C)060−14	22,800	11.7	14.0
3756742	24ABB324C30	CNPV*2417A**	58UVB060−14	22,800	11.7	14.0
4129928	24ABB324C30	CNPV*2417A**	58VLR105−12	22,600	11.7	14.0
4129927	24ABB324C30	CNPV*2417A**	58VMR105−12	22,400	11.7	14.0
4733691	24ABB324C30	CNPV*2417A**	59*N*A060V17**14	22,400	11.5	14.0
4733692	24ABB324C30	CNPV*2417A**	59*N*A080V17**14	22,200	11.8	14.2
4733693	24ABB324C30	CNPV*2417A**	59*P5A040E14**10	22,600	11.0	13.0
4733694	24ABB324C30	CNPV*2417A**	59*P5A060E17**14	22,400	11.8	14.2
4255193	24ABB324C30	CNPV*2417A**	OVLAAB036098	22,600	11.7	14.0
4129929	24ABB324C30	CNPV*2417A**	OVMAAB036098	22,600	11.5	13.5
4129931	24ABB324C30	CNPV*2417A**	OVMAAB042112	22,600	11.7	14.0
3040367	24ABB324C30	CNPV*2417A**+TDR		22,600	10.7	13.0
3040371	24ABB324C30	CNPV*3014A**	58CV(A,X)070−12	22,800	12.0	14.0
3040372	24ABB324C30	CNPV*3014A**	58PH*045−08	23,000	12.0	14.0
4733695	24ABB324C30	CNPV*3014A**	59*P5A040E14**10	22,800	11.0	13.3
3040370	24ABB324C30	CNPV*3014A**+TDR		23,000	10.7	13.0
3040375	24ABB324C30	CNPV*3017A**	58CV(A,X)090−16	22,800	12.0	14.5
4129969	24ABB324C30	CNPV*3017A**	58HDV040−−12	23,000	11.7	14.0
4129970	24ABB324C30	CNPV*3017A**	58HDV060−−12	23,200	11.7	14.0
3612945	24ABB324C30	CNPV*3017A**	58ME(B,C)040−12	22,600	12.0	14.5
3098941	24ABB324C30	CNPV*3017A**	58ME(B,C)060−12	22,600	12.0	14.5
3098942	24ABB324C30	CNPV*3017A**	58ME(B,C)080−12	22,600	12.0	14.5
3098940	24ABB324C30	CNPV*3017A**	58MEB040−12	22,600	12.0	14.5
3040374	24ABB324C30	CNPV*3017A**	58MV(B,C)060−14	23,000	12.2	14.5
3756743	24ABB324C30	CNPV*3017A**	58UVB060−14	23,000	12.2	14.5
4129933	24ABB324C30	CNPV*3017A**	58VLR105−12	23,000	12.0	14.5
4129932	24ABB324C30	CNPV*3017A**	58VMR105−12	22,600	12.0	14.5
4733696	24ABB324C30	CNPV*3017A**	59*N*A060V17**14	22,600	12.0	14.5
4733697	24ABB324C30	CNPV*3017A**	59*N*A080V17**14	22,600	12.0	14.5
4733698	24ABB324C30	CNPV*3017A**	59*P5A040E14**10	22,800	11.2	13.5
4733699	24ABB324C30	CNPV*3017A**	59*P5A060E17**14	22,800	12.0	14.5
4255194	24ABB324C30	CNPV*3017A**	OVLAAB036098	22,800	11.7	14.0
4129934	24ABB324C30	CNPV*3017A**	OVMAAB036098	22,800	11.7	14.0

See notes on page 36

COMBINATION RATINGS

AHRI Ref. No.	Model Number	Indoor Model	Furnace Model	Capacity	EER	SEER
4129936	24ABB324C30	CNPV*3017A**	OVMAAB042112	22,800	12.0	14.5
3040373	24ABB324C30	CNPV*3017A**+TDR		23,000	10.7	13.0
3689707	24ABB324C30	CNPV*3117A**	58CV(A,X)090−16	23,000	12.0	14.5
4129971	24ABB324C30	CNPV*3117A**	58HDV040−−12	23,400	11.7	14.0
4129972	24ABB324C30	CNPV*3117A**	58HDV060−−12	23,600	12.0	14.5
3689709	24ABB324C30	CNPV*3117A**	58ME(B,C)060−12	23,000	12.0	14.5
3689710	24ABB324C30	CNPV*3117A**	58ME(B,C)080−12	23,000	12.0	14.5
3689708	24ABB324C30	CNPV*3117A**	58MEB040−12	23,000	12.0	14.5
3689706	24ABB324C30	CNPV*3117A**	58MV(B,C)060−14	23,000	12.0	14.5
3689755	24ABB324C30	CNPV*3117A**	58UVB060−14	23,000	12.0	14.5
4129938	24ABB324C30	CNPV*3117A**	58VLR105−12	23,400	12.0	14.5
4129937	24ABB324C30	CNPV*3117A**	58VMR105−12	23,000	12.0	14.5
4733700	24ABB324C30	CNPV*3117A**	59*N*A060V17**14	23,000	12.0	14.5
4733701	24ABB324C30	CNPV*3117A**	59*N*A080V17**14	23,000	12.0	14.5
4733702	24ABB324C30	CNPV*3117A**	59*P5A040E14**10	23,400	11.4	13.7
4733703	24ABB324C30	CNPV*3117A**	59*P5A060E17**14	23,200	12.0	14.5
4255195	24ABB324C30	CNPV*3117A**	OVLAAB036098	23,400	12.0	14.5
4129939	24ABB324C30	CNPV*3117A**	OVMAAB036098	23,400	12.0	14.5
4129941	24ABB324C30	CNPV*3117A**	OVMAAB042112	23,200	12.0	14.5
3689705	24ABB324C30	CNPV*3117A**+TDR		23,000	11.0	13.0
3040410	24ABB324C30	CSPH*2412A**	58CV(A,X)070−12	22,400	11.7	14.0
3040411	24ABB324C30	CSPH*2412A**	58CV(A,X)090−16	22,800	12.0	14.0
3040412	24ABB324C30	CSPH*2412A**	58CV(A,X)110−20	22,800	11.7	14.0
3040413	24ABB324C30	CSPH*2412A**	58CV(A,X)135−22	22,800	12.0	14.0
3040414	24ABB324C30	CSPH*2412A**	58CV(A,X)155−22	22,800	12.0	14.0
3689730	24ABB324C30	CSPH*2412A**	58HDV040−−12	22,800	11.5	14.0
3689731	24ABB324C30	CSPH*2412A**	58HDV060−−12	22,800	11.5	14.0
3689732	24ABB324C30	CSPH*2412A**	58HDV080−−20	22,800	11.5	14.0
3689733	24ABB324C30	CSPH*2412A**	58HDV100−−20	22,800	11.5	14.0
3612948	24ABB324C30	CSPH*2412A**	58ME(B,C)040−12	22,600	12.0	14.5
3098950	24ABB324C30	CSPH*2412A**	58ME(B,C)060−12	22,600	12.0	14.5
3098951	24ABB324C30	CSPH*2412A**	58ME(B,C)080−12	22,600	12.0	14.5
3098949	24ABB324C30	CSPH*2412A**	58MEB040−12	22,600	12.0	14.5
3040405	24ABB324C30	CSPH*2412A**	58MV(B,C)060−14	23,000	12.0	14.0
3040406	24ABB324C30	CSPH*2412A**	58MV(B,C)080−14	22,800	12.0	14.0
3040407	24ABB324C30	CSPH*2412A**	58MV(B,C)080−20	22,600	11.7	14.0
3040408	24ABB324C30	CSPH*2412A**	58MV(B,C)100−20	22,800	12.0	14.0
3040409	24ABB324C30	CSPH*2412A**	58MV(B,C)120−20	22,800	12.0	14.0
3040415	24ABB324C30	CSPH*2412A**	58PH*045−08	22,800	11.7	14.0
4129958	24ABB324C30	CSPH*2412A**	58VLR105−12	23,000	11.7	14.0
4129957	24ABB324C30	CSPH*2412A**	58VMR105−12	22,600	11.7	14.0
4733722	24ABB324C30	CSPH*2412A**	59*N*A060V17**14	22,600	11.8	14.2
4733723	24ABB324C30	CSPH*2412A**	59*N*A080V17**14	22,600	11.8	14.2
4733724	24ABB324C30	CSPH*2412A**	59*N*A100V21**20	23,000	11.8	14.2
4733725	24ABB324C30	CSPH*2412A**	59*N*A120V24**22	22,800	12.0	14.5
4733726	24ABB324C30	CSPH*2412A**	59*P5A040E14**10	22,800	11.0	13.3
4733727	24ABB324C30	CSPH*2412A**	59*P5A060E17**14	22,400	11.8	14.2
4255191	24ABB324C30	CSPH*2412A**	OVLAAB036098	22,800	11.7	14.0
4129959	24ABB324C30	CSPH*2412A**	OVMAAB036098	22,800	11.7	14.0
4129961	24ABB324C30	CSPH*2412A**	OVMAAB042112	22,800	11.7	14.0
3040403	24ABB324C30	CSPH*2412A**+TDR		22,600	10.7	13.0
3040423	24ABB324C30	CSPH*3012A**	58CV(A,X)070−12	22,800	12.0	14.0
3040424	24ABB324C30	CSPH*3012A**	58CV(A,X)090−16	22,800	12.0	14.5
3040425	24ABB324C30	CSPH*3012A**	58CV(A,X)110−20	22,800	12.0	14.0
3040426	24ABB324C30	CSPH*3012A**	58CV(A,X)135−22	23,000	12.0	14.5
3040427	24ABB324C30	CSPH*3012A**	58CV(A,X)155−22	23,000	12.0	14.5
3689734	24ABB324C30	CSPH*3012A**	58HDV040−−12	23,000	11.5	14.0
3689735	24ABB324C30	CSPH*3012A**	58HDV060−−12	23,000	11.5	14.0
3689736	24ABB324C30	CSPH*3012A**	58HDV100−−20	23,000	11.5	14.0
3612949	24ABB324C30	CSPH*3012A**	58ME(B,C)040−12	22,600	12.0	14.5
3098953	24ABB324C30	CSPH*3012A**	58ME(B,C)060−12	22,600	12.0	14.5
3098954	24ABB324C30	CSPH*3012A**	58ME(B,C)080−12	22,600	12.0	14.5
3098952	24ABB324C30	CSPH*3012A**	58MEB040−12	22,600	12.0	14.5
3040418	24ABB324C30	CSPH*3012A**	58MV(B,C)060−14	23,200	12.0	14.5
3040419	24ABB324C30	CSPH*3012A**	58MV(B,C)080−14	22,800	12.0	14.0
3040420	24ABB324C30	CSPH*3012A**	58MV(B,C)080−20	22,600	12.0	14.0
3040421	24ABB324C30	CSPH*3012A**	58MV(B,C)100−20	22,800	12.0	14.5
3040422	24ABB324C30	CSPH*3012A**	58MV(B,C)120−20	23,000	12.0	14.5
3040428	24ABB324C30	CSPH*3012A**	58PH*045−08	23,000	12.0	14.0
4129963	24ABB324C30	CSPH*3012A**	58VLR105−12	23,000	12.0	14.5
4129962	24ABB324C30	CSPH*3012A**	58VMR105−12	22,600	11.7	14.0
4733728	24ABB324C30	CSPH*3012A**	59*N*A060V17**14	22,800	11.8	14.2
4733729	24ABB324C30	CSPH*3012A**	59*N*A080V17**14	22,600	12.0	14.5

See notes on page 36

COMBINATION RATINGS

AHRI Ref. No.	Model Number	Indoor Model	Furnace Model	Capacity	EER	SEER
4733730	24ABB324C30	CSPH*3012A**	59*N*A100V21**20	23,000	12.0	14.5
4733731	24ABB324C30	CSPH*3012A**	59*N*A120V24**22	23,000	12.0	14.5
4733732	24ABB324C30	CSPH*3012A**	59*P5A040E14**10	23,000	11.2	13.5
4733733	24ABB324C30	CSPH*3012A**	59*P5A060E17**14	22,800	12.0	14.5
4255192	24ABB324C30	CSPH*3012A**	OVLAAB036098	23,000	11.7	14.0
4129964	24ABB324C30	CSPH*3012A**	OVMAAB036098	23,000	11.7	14.0
4129966	24ABB324C30	CSPH*3012A**	OVMAAB042112	22,800	12.0	14.5
3040416	24ABB324C30	CSPH*3012A**+TDR		23,000	10.7	13.0
3867304	24ABB324C30	FB4CNF024		22,400	11.0	13.0
4208540	24ABB324C30	FB4CNF024+TXV		22,400	11.0	13.5
3867305	24ABB324C30	FB4CNF030		23,000	11.0	13.0
4208541	24ABB324C30	FB4CNF030+TXV		23,000	11.0	13.5
3040433	24ABB324C30	FE4AN(B,F)003+UI		23,000	12.2	14.5
3040432	24ABB324C30	FE4ANF002+UI		22,000	12.0	14.0
3040434	24ABB324C30	FE5ANB004+UI		23,600	12.5	15.0
3040435	24ABB324C30	FF1ENP024		22,400	10.7	13.0
3468781	24ABB324C30	FF1ENP025		23,000	11.7	13.5
3468782	24ABB324C30	FF1ENP031		23,000	11.7	13.5
3404503	24ABB324C30	FV4CN(B,F)003		23,000	12.2	14.5
3404502	24ABB324C30	FV4CNF002		22,000	12.0	14.0
3752038	24ABB324C30	FX4DN(B,F)031		23,000	11.5	14.0
3752039	24ABB324C30	FX4DN(B,F)037		23,200	12.0	14.5
3752037	24ABB324C30	FX4DNF025		23,000	12.0	14.5
3867306	24ABB324C30	FY5BNF024		22,400	11.0	13.0
4208542	24ABB324C30	FY5BNF024+TXV		22,400	11.0	13.5
3867307	24ABB324C30	FY5BNF030		23,000	11.0	13.0
4208543	24ABB324C30	FY5BNF030+TXV		23,000	11.0	13.5
3040438	24ABB330C30	†CAP**3014A**+TDR		29,000	11.0	13.0
3040439	24ABB330C30	CAP**3014A**	58CV(A,X)070−12	28,800	12.0	14.0
3040442	24ABB330C30	CAP**3017A**	58CV(A,X)090−16	28,800	12.2	14.5
3612950	24ABB330C30	CAP**3017A**	58ME(B,C)040−12	29,000	12.0	14.5
3098956	24ABB330C30	CAP**3017A**	58ME(B,C)060−12	29,000	12.0	14.5
3098957	24ABB330C30	CAP**3017A**	58ME(B,C)080−12	29,000	12.0	14.5
3098958	24ABB330C30	CAP**3017A**	58ME(B,C)080−16	29,000	12.0	14.0
3098955	24ABB330C30	CAP**3017A**	58MEB040−12	29,000	12.0	14.5
3040441	24ABB330C30	CAP**3017A**	58MV(B,C)060−14	29,000	12.0	14.0
3040443	24ABB330C30	CAP**3017A**	58PH*070−16	29,000	12.0	14.0
3672960	24ABB330C30	CAP**3017A**	58UVB060−14	29,000	12.0	14.0
4129980	24ABB330C30	CAP**3017A**	58VLR105−12	28,800	12.0	14.0
4129979	24ABB330C30	CAP**3017A**	58VMR105−12	28,400	12.0	14.0
4733734	24ABB330C30	CAP**3017A**	59*N*A060V17**14	28,600	11.8	14.2
4733735	24ABB330C30	CAP**3017A**	59*N*A080V17**14	28,800	11.8	14.2
4733736	24ABB330C30	CAP**3017A**	59*P5A060E17**14	28,800	11.8	14.2
4733737	24ABB330C30	CAP**3017A**	59*P5A080E17**16	29,000	11.8	14.2
4255199	24ABB330C30	CAP**3017A**	OVLAAB036098	28,600	11.7	14.0
4129981	24ABB330C30	CAP**3017A**	OVMAAB036098	28,800	11.5	13.5
4129983	24ABB330C30	CAP**3017A**	OVMAAB042112	28,800	12.0	14.0
3040440	24ABB330C30	CAP**3017A**+TDR		29,000	11.0	13.0
3040445	24ABB330C30	CAP**3614A**	58CV(A,X)070−12	28,800	12.0	14.0
3040444	24ABB330C30	CAP**3614A**+TDR		29,200	11.2	13.2
3040448	24ABB330C30	CAP**3617A**	58CV(A,X)090−16	29,000	12.2	14.5
3612951	24ABB330C30	CAP**3617A**	58ME(B,C)040−12	29,000	12.0	14.5
3098960	24ABB330C30	CAP**3617A**	58ME(B,C)060−12	29,000	12.0	14.5
3098961	24ABB330C30	CAP**3617A**	58ME(B,C)080−12	29,000	12.0	14.5
3098962	24ABB330C30	CAP**3617A**	58ME(B,C)080−16	29,000	12.0	14.5
3098959	24ABB330C30	CAP**3617A**	58MEB040−12	29,000	12.0	14.5
3040447	24ABB330C30	CAP**3617A**	58MV(B,C)060−14	29,000	12.2	14.5
3040449	24ABB330C30	CAP**3617A**	58PH*070−16	29,200	12.0	14.0
3672961	24ABB330C30	CAP**3617A**	58UVB060−14	29,000	12.2	14.5
4129985	24ABB330C30	CAP**3617A**	58VLR105−12	29,000	12.0	14.0
4129984	24ABB330C30	CAP**3617A**	58VMR105−12	28,600	12.0	14.0
4733738	24ABB330C30	CAP**3617A**	59*N*A060V17**14	28,600	11.8	14.2
4733739	24ABB330C30	CAP**3617A**	59*N*A080V17**14	28,800	11.8	14.2
4733740	24ABB330C30	CAP**3617A**	59*P5A060E17**14	29,000	11.8	14.2
4733741	24ABB330C30	CAP**3617A**	59*P5A080E17**16	29,200	11.8	14.2
4255200	24ABB330C30	CAP**3617A**	OVLAAB036098	28,800	11.7	14.0
4129986	24ABB330C30	CAP**3617A**	OVMAAB036098	28,800	11.7	14.0
4129988	24ABB330C30	CAP**3617A**	OVMAAB042112	29,000	12.0	14.5
3040446	24ABB330C30	CAP**3617A**+TDR		29,200	11.2	13.2
3689655	24ABB330C30	CAP**3619A**	58HDV040−−12	29,200	11.5	14.0
3689656	24ABB330C30	CAP**3619A**	58HDV060−−12	29,200	11.5	14.0
4733747	24ABB330C30	CAP**3619A**	59*N*A060V17**14	28,600	11.8	14.2

See notes on page 36

COMBINATION RATINGS

AHRI Ref. No.	Model Number	Indoor Model	Furnace Model	Capacity	EER	SEER
4733748	24ABB330C30	CAP**3619A**	59*N*A080V17**14	28,800	11.8	14.2
4733749	24ABB330C30	CAP**3619A**	59*N*A100V21**20	29,000	12.0	14.5
4733750	24ABB330C30	CAP**3619A**	59*P5A060E17**14	29,000	11.8	14.2
4733751	24ABB330C30	CAP**3619A**	59*P5A080E17**16	29,200	11.8	14.2
3689654	24ABB330C30	CAP**3619A**+TDR		29,200	11.0	13.0
3040454	24ABB330C30	CAP**3621A**	58CV(A,X)110−20	29,000	12.2	14.5
3040451	24ABB330C30	CAP**3621A**	58MV(B,C)080−14	28,800	12.0	14.0
3040452	24ABB330C30	CAP**3621A**	58MV(B,C)080−20	29,000	12.2	14.5
3040453	24ABB330C30	CAP**3621A**	58MV(B,C)100−20	28,800	12.0	14.0
3040455	24ABB330C30	CAP**3621A**	58PH*090−16	29,400	12.2	14.5
3672962	24ABB330C30	CAP**3621A**	58UVB080−14	28,800	12.0	14.0
3672963	24ABB330C30	CAP**3621A**	58UVB080−20	29,000	12.2	14.5
3672964	24ABB330C30	CAP**3621A**	58UVB100−20	28,800	12.0	14.0
4733742	24ABB330C30	CAP**3621A**	59*N*A060V17**14	28,800	11.8	14.2
4733743	24ABB330C30	CAP**3621A**	59*N*A080V17**14	28,800	12.0	14.5
4733744	24ABB330C30	CAP**3621A**	59*N*A100V21**20	29,000	12.0	14.5
4733745	24ABB330C30	CAP**3621A**	59*P5A060E17**14	29,000	11.8	14.2
4733746	24ABB330C30	CAP**3621A**	59*P5A080E17**16	29,200	11.8	14.2
4129989	24ABB330C30	CAP**3621A**	OVLAAB048112	29,000	12.0	14.0
3040450	24ABB330C30	CAP**3621A**+TDR		29,200	11.2	13.2
3689696	24ABB330C30	CAP**4823A**	58HDV080−−20	29,800	12.0	14.5
3689695	24ABB330C30	CAP**4823A**+TDR		29,600	11.0	13.0
3040479	24ABB330C30	CNPH*3017A**	58CV(A,X)070−12	28,800	12.0	14.0
3040480	24ABB330C30	CNPH*3017A**	58CV(A,X)090−16	28,800	12.0	14.0
3040481	24ABB330C30	CNPH*3017A**	58CV(A,X)110−20	29,000	12.0	14.0
3040482	24ABB330C30	CNPH*3017A**	58CV(A,X)135−22	29,000	12.2	14.5
3040483	24ABB330C30	CNPH*3017A**	58CV(A,X)155−22	29,000	12.2	14.5
4130052	24ABB330C30	CNPH*3017A**	58HDV040−−12	28,600	11.5	13.5
4130053	24ABB330C30	CNPH*3017A**	58HDV060−−12	28,800	11.5	13.5
4130054	24ABB330C30	CNPH*3017A**	58HDV080−−20	29,000	12.0	14.0
4130055	24ABB330C30	CNPH*3017A**	58HDV100−−20	29,000	12.0	14.0
3612954	24ABB330C30	CNPH*3017A**	58ME(B,C)040−12	29,000	12.0	14.5
3098972	24ABB330C30	CNPH*3017A**	58ME(B,C)060−12	29,000	12.0	14.5
3098973	24ABB330C30	CNPH*3017A**	58ME(B,C)080−12	29,000	12.0	14.5
3098974	24ABB330C30	CNPH*3017A**	58ME(B,C)080−16	29,000	12.0	14.0
3098971	24ABB330C30	CNPH*3017A**	58MEB040−12	29,000	12.0	14.5
3040474	24ABB330C30	CNPH*3017A**	58MV(B,C)060−14	29,000	12.0	14.0
3040475	24ABB330C30	CNPH*3017A**	58MV(B,C)080−14	28,800	12.0	14.0
3040476	24ABB330C30	CNPH*3017A**	58MV(B,C)080−20	28,800	12.0	14.0
3040477	24ABB330C30	CNPH*3017A**	58MV(B,C)100−20	28,600	12.0	14.0
3040478	24ABB330C30	CNPH*3017A**	58MV(B,C)120−20	29,000	12.2	14.5
3040484	24ABB330C30	CNPH*3017A**	58PH*070−16	29,000	12.0	14.0
3040485	24ABB330C30	CNPH*3017A**	58PH*090−16	29,000	12.0	14.0
4130012	24ABB330C30	CNPH*3017A**	58VLR105−12	28,800	12.0	14.0
4130011	24ABB330C30	CNPH*3017A**	58VMR105−12	28,400	12.0	14.0
4733773	24ABB330C30	CNPH*3017A**	59*N*A060V17**14	28,600	11.8	14.2
4733774	24ABB330C30	CNPH*3017A**	59*N*A080V17**14	28,800	11.8	14.2
4733775	24ABB330C30	CNPH*3017A**	59*N*A100V21**20	28,800	11.8	14.2
4733776	24ABB330C30	CNPH*3017A**	59*N*A120V24**22	28,800	12.0	14.5
4733777	24ABB330C30	CNPH*3017A**	59*P5A060E17**14	28,800	11.8	14.2
4733778	24ABB330C30	CNPH*3017A**	59*P5A080E17**16	29,000	11.8	14.2
4255205	24ABB330C30	CNPH*3017A**	OVLAAB036098	28,600	11.7	14.0
4130016	24ABB330C30	CNPH*3017A**	OVLAAB048112	29,000	11.7	14.0
4130013	24ABB330C30	CNPH*3017A**	OVMAAB036098	28,800	11.5	13.5
4130015	24ABB330C30	CNPH*3017A**	OVMAAB042112	28,800	12.0	14.0
3040472	24ABB330C30	CNPH*3017A**+TDR		29,000	11.0	13.0
3689672	24ABB330C30	CNPH*3117A**	58CV(A,X)070−12	29,400	12.0	14.5
3689673	24ABB330C30	CNPH*3117A**	58CV(A,X)090−16	29,400	12.0	14.5
3689674	24ABB330C30	CNPH*3117A**	58CV(A,X)110−20	29,400	12.0	14.5
3689675	24ABB330C30	CNPH*3117A**	58CV(A,X)135−22	29,400	12.0	14.5
3689676	24ABB330C30	CNPH*3117A**	58CV(A,X)155−22	29,400	12.0	14.5
3689683	24ABB330C30	CNPH*3117A**	58HDV040−−12	29,400	11.5	14.0
3689684	24ABB330C30	CNPH*3117A**	58HDV060−−12	29,400	12.0	14.5
3689685	24ABB330C30	CNPH*3117A**	58HDV080−−20	29,400	12.0	14.5
3689686	24ABB330C30	CNPH*3117A**	58HDV100−−20	29,400	12.0	14.5
3689680	24ABB330C30	CNPH*3117A**	58ME(B,C)060−12	29,400	12.0	14.5
3689681	24ABB330C30	CNPH*3117A**	58ME(B,C)080−12	29,400	12.0	14.5
3689682	24ABB330C30	CNPH*3117A**	58ME(B,C)080−16	29,400	12.0	14.5
3689679	24ABB330C30	CNPH*3117A**	58MEB040−12	29,400	12.0	14.5
3689667	24ABB330C30	CNPH*3117A**	58MV(B,C)060−14	29,400	12.0	14.5
3689668	24ABB330C30	CNPH*3117A**	58MV(B,C)080−14	29,400	12.0	14.5
3689669	24ABB330C30	CNPH*3117A**	58MV(B,C)080−20	29,400	12.0	14.5
3689670	24ABB330C30	CNPH*3117A**	58MV(B,C)100−20	29,400	12.0	14.5

See notes on page 36

COMBINATION RATINGS

AHRI Ref. No.	Model Number	Indoor Model	Furnace Model	Capacity	EER	SEER
3689671	24ABB330C30	CNPH*3117A**	58MV(B,C)120−20	29,400	12.0	14.5
3689666	24ABB330C30	CNPH*3117A**	58MVB040−14	29,400	12.0	14.5
3689677	24ABB330C30	CNPH*3117A**	58PH*070−16	29,400	11.5	14.0
3689678	24ABB330C30	CNPH*3117A**	58PH*090−16	29,400	12.0	14.5
4130018	24ABB330C30	CNPH*3117A**	58VLR105−12	29,000	12.0	14.5
4130017	24ABB330C30	CNPH*3117A**	58VMR105−12	29,000	12.0	14.5
4733779	24ABB330C30	CNPH*3117A**	59*N*A060V17**14	29,200	12.0	14.5
4733780	24ABB330C30	CNPH*3117A**	59*N*A080V17**14	29,400	12.0	14.5
4733781	24ABB330C30	CNPH*3117A**	59*N*A100V21**20	29,600	12.0	14.5
4733782	24ABB330C30	CNPH*3117A**	59*N*A120V24**22	29,600	12.0	14.5
4733783	24ABB330C30	CNPH*3117A**	59*P5A060E17**14	29,600	12.0	14.5
4733784	24ABB330C30	CNPH*3117A**	59*P5A080E17**16	29,800	12.0	14.5
4255206	24ABB330C30	CNPH*3117A**	OVLAAB036098	29,000	12.0	14.0
4130022	24ABB330C30	CNPH*3117A**	OVLAAB048112	29,000	12.0	14.5
4130019	24ABB330C30	CNPH*3117A**	OVMAAB036098	29,000	12.0	14.0
4130021	24ABB330C30	CNPH*3117A**	OVMAAB042112	29,000	12.0	14.5
3689665	24ABB330C30	CNPH*3117A**+TDR		29,400	11.0	13.5
3040493	24ABB330C30	CNPH*3617A**	58CV(A,X)070−12	28,800	12.0	14.0
3040494	24ABB330C30	CNPH*3617A**	58CV(A,X)090−16	28,800	12.0	14.0
3040495	24ABB330C30	CNPH*3617A**	58CV(A,X)110−20	29,000	12.0	14.0
3040496	24ABB330C30	CNPH*3617A**	58CV(A,X)135−22	29,000	12.2	14.5
3040497	24ABB330C30	CNPH*3617A**	58CV(A,X)155−22	29,000	12.2	14.5
4130056	24ABB330C30	CNPH*3617A**	58HDV040−−12	28,600	11.5	13.5
4130057	24ABB330C30	CNPH*3617A**	58HDV060−−12	28,800	11.5	13.5
4130058	24ABB330C30	CNPH*3617A**	58HDV080−−20	29,000	12.0	14.0
4130059	24ABB330C30	CNPH*3617A**	58HDV100−−20	29,000	12.0	14.0
3612955	24ABB330C30	CNPH*3617A**	58ME(B,C)040−12	29,000	12.0	14.5
3098976	24ABB330C30	CNPH*3617A**	58ME(B,C)060−12	29,000	12.0	14.5
3098977	24ABB330C30	CNPH*3617A**	58ME(B,C)080−12	29,000	12.0	14.5
3098978	24ABB330C30	CNPH*3617A**	58ME(B,C)080−16	29,000	12.0	14.0
3098975	24ABB330C30	CNPH*3617A**	58MEB040−12	29,000	12.0	14.5
3040488	24ABB330C30	CNPH*3617A**	58MV(B,C)060−14	29,000	12.0	14.0
3040489	24ABB330C30	CNPH*3617A**	58MV(B,C)080−14	28,800	12.0	14.0
3040490	24ABB330C30	CNPH*3617A**	58MV(B,C)080−20	28,800	12.0	14.0
3040491	24ABB330C30	CNPH*3617A**	58MV(B,C)100−20	28,600	12.0	14.0
3040492	24ABB330C30	CNPH*3617A**	58MV(B,C)120−20	29,000	12.2	14.5
3040498	24ABB330C30	CNPH*3617A**	58PH*070−16	29,000	12.0	14.0
3040499	24ABB330C30	CNPH*3617A**	58PH*090−16	29,000	12.0	14.0
4130024	24ABB330C30	CNPH*3617A**	58VLR105−12	28,800	12.0	14.0
4130023	24ABB330C30	CNPH*3617A**	58VMR105−12	28,400	12.0	14.0
4733785	24ABB330C30	CNPH*3617A**	59*N*A060V17**14	28,600	11.8	14.2
4733786	24ABB330C30	CNPH*3617A**	59*N*A080V17**14	28,800	11.8	14.2
4733787	24ABB330C30	CNPH*3617A**	59*N*A100V21**20	28,800	11.8	14.2
4733788	24ABB330C30	CNPH*3617A**	59*N*A120V24**22	28,800	12.0	14.5
4733789	24ABB330C30	CNPH*3617A**	59*P5A060E17**14	28,800	11.8	14.2
4733790	24ABB330C30	CNPH*3617A**	59*P5A080E17**16	29,000	11.8	14.2
4255207	24ABB330C30	CNPH*3617A**	OVLAAB036098	28,600	11.7	14.0
4130028	24ABB330C30	CNPH*3617A**	OVLAAB048112	29,000	11.7	14.0
4130025	24ABB330C30	CNPH*3617A**	OVMAAB036098	28,800	11.5	13.5
4130027	24ABB330C30	CNPH*3617A**	OVMAAB042112	28,800	12.0	14.0
3040486	24ABB330C30	CNPH*3617A**+TDR		29,000	11.0	13.0
3040457	24ABB330C30	CNPV*3014A**	58CV(A,X)070−12	28,800	12.0	14.0
3040456	24ABB330C30	CNPV*3014A**+TDR		29,000	11.0	13.0
3040460	24ABB330C30	CNPV*3017A**	58CV(A,X)090−16	28,800	12.0	14.0
4130041	24ABB330C30	CNPV*3017A**	58HDV040−−12	28,600	11.5	13.5
4130042	24ABB330C30	CNPV*3017A**	58HDV060−−12	28,800	11.5	13.5
3612952	24ABB330C30	CNPV*3017A**	58ME(B,C)040−12	29,000	12.0	14.5
3098964	24ABB330C30	CNPV*3017A**	58ME(B,C)060−12	29,000	12.0	14.5
3098965	24ABB330C30	CNPV*3017A**	58ME(B,C)080−12	29,000	12.0	14.5
3098966	24ABB330C30	CNPV*3017A**	58ME(B,C)080−16	29,000	12.0	14.0
3098963	24ABB330C30	CNPV*3017A**	58MEB040−12	29,000	12.0	14.5
3040459	24ABB330C30	CNPV*3017A**	58MV(B,C)060−14	29,000	12.0	14.0
3040461	24ABB330C30	CNPV*3017A**	58PH*070−16	29,000	12.0	14.0
3756744	24ABB330C30	CNPV*3017A**	58UVB060−14	29,000	12.0	14.0
4129991	24ABB330C30	CNPV*3017A**	58VLR105−12	28,800	12.0	14.0
4129990	24ABB330C30	CNPV*3017A**	58VMR105−12	28,400	12.0	14.0
4733752	24ABB330C30	CNPV*3017A**	59*N*A060V17**14	28,600	11.8	14.2
4733753	24ABB330C30	CNPV*3017A**	59*N*A080V17**14	28,800	11.8	14.2
4733754	24ABB330C30	CNPV*3017A**	59*P5A060E17**14	28,800	11.8	14.2
4733755	24ABB330C30	CNPV*3017A**	59*P5A080E17**16	29,000	11.8	14.2
4255201	24ABB330C30	CNPV*3017A**	OVLAAB036098	28,600	11.7	14.0
4129992	24ABB330C30	CNPV*3017A**	OVMAAB036098	28,800	11.5	13.5
4129994	24ABB330C30	CNPV*3017A**	OVMAAB042112	28,800	12.0	14.0

See notes on page 36

COMBINATION RATINGS

AHRI Ref. No.	Model Number	Indoor Model	Furnace Model	Capacity	EER	SEER
3040458	24ABB330C30	CNPV*3017A**+TDR		29,000	11.0	13.0
3689659	24ABB330C30	CNPV*3117A**	58CV(A,X)090−16	29,400	12.0	14.5
4130043	24ABB330C30	CNPV*3117A**	58HDV040−−12	29,000	11.7	14.0
4130044	24ABB330C30	CNPV*3117A**	58HDV060−−12	29,000	12.0	14.0
3689662	24ABB330C30	CNPV*3117A**	58ME(B,C)060−12	29,400	12.0	14.5
3689663	24ABB330C30	CNPV*3117A**	58ME(B,C)080−12	29,400	12.0	14.5
3689664	24ABB330C30	CNPV*3117A**	58ME(B,C)080−16	29,400	12.0	14.5
3689661	24ABB330C30	CNPV*3117A**	58MEB040−12	29,400	12.0	14.5
3689658	24ABB330C30	CNPV*3117A**	58MV(B,C)060−14	29,400	12.0	14.5
3689660	24ABB330C30	CNPV*3117A**	58PH*070−16	29,400	12.0	14.5
3689753	24ABB330C30	CNPV*3117A**	58UVB060−14	29,400	12.0	14.5
4129996	24ABB330C30	CNPV*3117A**	58VLR105−12	29,000	12.0	14.5
4129995	24ABB330C30	CNPV*3117A**	58VMR105−12	29,000	12.0	14.5
4733756	24ABB330C30	CNPV*3117A**	59*N*A060V17**14	29,200	12.0	14.5
4733757	24ABB330C30	CNPV*3117A**	59*N*A080V17**14	29,400	12.0	14.5
4733758	24ABB330C30	CNPV*3117A**	59*P5A060E17**14	29,600	12.0	14.5
4733759	24ABB330C30	CNPV*3117A**	59*P5A080E17**16	29,800	12.0	14.5
4255202	24ABB330C30	CNPV*3117A**	OVLAAB036098	29,000	12.0	14.0
4129997	24ABB330C30	CNPV*3117A**	OVMAAB036098	29,000	12.0	14.0
4129999	24ABB330C30	CNPV*3117A**	OVMAAB042112	29,000	12.0	14.5
3689657	24ABB330C30	CNPV*3117A**+TDR		29,400	11.0	13.5
3040464	24ABB330C30	CNPV*3617A**	58CV(A,X)090−16	28,800	12.0	14.0
4130045	24ABB330C30	CNPV*3617A**	58HDV040−−12	28,600	11.5	13.5
4130046	24ABB330C30	CNPV*3617A**	58HDV060−−12	28,800	11.5	13.5
3612953	24ABB330C30	CNPV*3617A**	58ME(B,C)040−12	29,000	12.0	14.5
3098968	24ABB330C30	CNPV*3617A**	58ME(B,C)060−12	29,000	12.0	14.5
3098969	24ABB330C30	CNPV*3617A**	58ME(B,C)080−12	29,000	12.0	14.5
3098970	24ABB330C30	CNPV*3617A**	58ME(B,C)080−16	29,000	12.0	14.0
3098967	24ABB330C30	CNPV*3617A**	58MEB040−12	29,000	12.0	14.5
3040463	24ABB330C30	CNPV*3617A**	58MV(B,C)060−14	29,000	12.0	14.0
3040465	24ABB330C30	CNPV*3617A**	58PH*070−16	29,000	12.0	14.0
3756745	24ABB330C30	CNPV*3617A**	58UVB060−14	29,000	12.0	14.0
4130001	24ABB330C30	CNPV*3617A**	58VLR105−12	28,800	12.0	14.0
4130000	24ABB330C30	CNPV*3617A**	58VMR105−12	28,400	12.0	14.0
4733760	24ABB330C30	CNPV*3617A**	59*N*A060V17**14	28,600	11.8	14.2
4733761	24ABB330C30	CNPV*3617A**	59*N*A080V17**14	28,800	11.8	14.2
4733762	24ABB330C30	CNPV*3617A**	59*P5A060E17**14	28,800	11.8	14.2
4733763	24ABB330C30	CNPV*3617A**	59*P5A080E17**16	29,000	11.8	14.2
4255203	24ABB330C30	CNPV*3617A**	OVLAAB036098	28,600	11.7	14.0
4130002	24ABB330C30	CNPV*3617A**	OVMAAB036098	28,800	11.5	13.5
4130004	24ABB330C30	CNPV*3617A**	OVMAAB042112	28,800	12.0	14.0
3040462	24ABB330C30	CNPV*3617A**+TDR		29,000	11.0	13.0
3040470	24ABB330C30	CNPV*3621A**	58CV(A,X)110−20	29,000	12.0	14.0
4130047	24ABB330C30	CNPV*3621A**	58HDV040−−12	28,800	11.5	13.5
4130048	24ABB330C30	CNPV*3621A**	58HDV060−−12	28,800	11.5	13.5
4130049	24ABB330C30	CNPV*3621A**	58HDV080−−20	29,000	12.0	14.0
3040467	24ABB330C30	CNPV*3621A**	58MV(B,C)080−14	28,800	12.0	14.0
3040468	24ABB330C30	CNPV*3621A**	58MV(B,C)080−20	28,800	12.0	14.0
3040469	24ABB330C30	CNPV*3621A**	58MV(B,C)100−20	28,600	12.0	14.0
3040471	24ABB330C30	CNPV*3621A**	58PH*090−16	29,000	12.0	14.0
3756746	24ABB330C30	CNPV*3621A**	58UVB080−14	28,800	12.0	14.0
3756747	24ABB330C30	CNPV*3621A**	58UVB080−20	28,800	12.0	14.0
3756748	24ABB330C30	CNPV*3621A**	58UVB100−20	28,600	12.0	14.0
4733764	24ABB330C30	CNPV*3621A**	59*N*A060V17**14	28,600	11.8	14.2
4733765	24ABB330C30	CNPV*3621A**	59*N*A080V17**14	28,800	11.8	14.2
4733766	24ABB330C30	CNPV*3621A**	59*N*A100V21**20	29,000	11.8	14.2
4733767	24ABB330C30	CNPV*3621A**	59*P5A060E17**14	28,800	11.8	14.2
4733768	24ABB330C30	CNPV*3621A**	59*P5A080E17**16	29,000	11.8	14.2
4130005	24ABB330C30	CNPV*3621A**	OVLAAB048112	29,000	11.7	14.0
3040466	24ABB330C30	CNPV*3621A**+TDR		29,000	11.0	13.0
3689699	24ABB330C30	CNPV*3717A**	58CV(A,X)090−16	29,600	12.0	14.5
4130050	24ABB330C30	CNPV*3717A**	58HDV040−−12	29,000	12.0	14.0
4130051	24ABB330C30	CNPV*3717A**	58HDV060−−12	29,000	12.0	14.0
3689702	24ABB330C30	CNPV*3717A**	58ME(B,C)060−12	29,600	12.0	14.5
3689703	24ABB330C30	CNPV*3717A**	58ME(B,C)080−12	29,600	12.0	14.5
3689704	24ABB330C30	CNPV*3717A**	58ME(B,C)080−16	29,600	12.0	14.5
3689701	24ABB330C30	CNPV*3717A**	58MEB040−12	29,600	12.0	14.5
3689698	24ABB330C30	CNPV*3717A**	58MV(B,C)060−14	29,600	12.0	14.5
3689700	24ABB330C30	CNPV*3717A**	58PH*070−16	29,600	12.0	14.5
3689754	24ABB330C30	CNPV*3717A**	58UVB060−14	29,600	12.0	14.5
4130007	24ABB330C30	CNPV*3717A**	58VLR105−12	29,000	12.0	14.5
4130006	24ABB330C30	CNPV*3717A**	58VMR105−12	29,000	12.0	14.5
4733769	24ABB330C30	CNPV*3717A**	59*N*A060V17**14	29,600	12.0	14.5

See notes on page 36

COMBINATION RATINGS

AHRI Ref. No.	Model Number	Indoor Model	Furnace Model	Capacity	EER	SEER
4733770	24ABB330C30	CNPV*3717A**	59*N*A080V17**14	29,800	12.0	14.5
4733771	24ABB330C30	CNPV*3717A**	59*P5A060E17**14	30,000	12.0	14.5
4733772	24ABB330C30	CNPV*3717A**	59*P5A080E17**16	30,200	12.0	14.5
4255204	24ABB330C30	CNPV*3717A**	OVLAAB036098	29,000	12.0	14.5
4130008	24ABB330C30	CNPV*3717A**	OVMAAB036098	29,000	12.0	14.5
4130010	24ABB330C30	CNPV*3717A**	OVMAAB042112	29,000	12.0	14.5
3689697	24ABB330C30	CNPV*3717A**+TDR		29,600	11.0	13.0
3040508	24ABB330C30	CSPH*3012A**	58CV(A,X)070−12	28,800	12.0	14.0
3040509	24ABB330C30	CSPH*3012A**	58CV(A,X)090−16	29,000	12.0	14.0
3040510	24ABB330C30	CSPH*3012A**	58CV(A,X)110−20	29,000	12.0	14.0
3040511	24ABB330C30	CSPH*3012A**	58CV(A,X)135−22	29,000	12.2	14.5
3040512	24ABB330C30	CSPH*3012A**	58CV(A,X)155−22	29,000	12.2	14.5
3689687	24ABB330C30	CSPH*3012A**	58HDV040−−12	29,000	11.5	14.0
3689688	24ABB330C30	CSPH*3012A**	58HDV060−−12	29,000	11.5	14.0
3689689	24ABB330C30	CSPH*3012A**	58HDV080−−20	29,000	11.5	14.0
3689690	24ABB330C30	CSPH*3012A**	58HDV100−−20	29,000	11.5	14.0
3612956	24ABB330C30	CSPH*3012A**	58ME(B,C)040−12	29,000	12.0	14.5
3098980	24ABB330C30	CSPH*3012A**	58ME(B,C)060−12	29,000	12.0	14.5
3098981	24ABB330C30	CSPH*3012A**	58ME(B,C)080−12	29,000	12.0	14.5
3098982	24ABB330C30	CSPH*3012A**	58ME(B,C)080−16	29,000	12.0	14.0
3098979	24ABB330C30	CSPH*3012A**	58MEB040−12	29,000	12.0	14.5
3040503	24ABB330C30	CSPH*3012A**	58MV(B,C)060−14	29,000	12.0	14.0
3040504	24ABB330C30	CSPH*3012A**	58MV(B,C)080−14	28,800	12.0	14.0
3040505	24ABB330C30	CSPH*3012A**	58MV(B,C)080−20	29,000	12.0	14.0
3040506	24ABB330C30	CSPH*3012A**	58MV(B,C)100−20	28,800	12.0	14.0
3040507	24ABB330C30	CSPH*3012A**	58MV(B,C)120−20	29,000	12.2	14.5
3040513	24ABB330C30	CSPH*3012A**	58PH*070−16	29,000	12.0	14.0
3040514	24ABB330C30	CSPH*3012A**	58PH*090−16	29,000	12.0	14.0
4130030	24ABB330C30	CSPH*3012A**	58VLR105−12	29,000	12.0	14.0
4130029	24ABB330C30	CSPH*3012A**	58VMR105−12	28,600	11.7	14.0
4733791	24ABB330C30	CSPH*3012A**	59*N*A060V17**14	28,800	11.5	14.0
4733792	24ABB330C30	CSPH*3012A**	59*N*A080V17**14	28,800	11.8	14.2
4733793	24ABB330C30	CSPH*3012A**	59*N*A100V21**20	29,000	11.8	14.2
4733794	24ABB330C30	CSPH*3012A**	59*N*A120V24**22	29,000	12.0	14.5
4733795	24ABB330C30	CSPH*3012A**	59*P5A060E17**14	28,800	11.8	14.2
4733796	24ABB330C30	CSPH*3012A**	59*P5A080E17**16	29,200	11.8	14.2
4255208	24ABB330C30	CSPH*3012A**	OVLAAB036098	28,800	11.7	14.0
4130034	24ABB330C30	CSPH*3012A**	OVLAAB048112	29,000	11.7	14.0
4130031	24ABB330C30	CSPH*3012A**	OVMAAB036098	28,800	11.5	13.5
4130033	24ABB330C30	CSPH*3012A**	OVMAAB042112	29,000	12.0	14.0
3040501	24ABB330C30	CSPH*3012A**+TDR		29,000	11.0	13.0
3040522	24ABB330C30	CSPH*3612A**	58CV(A,X)070−12	28,800	12.0	14.0
3040523	24ABB330C30	CSPH*3612A**	58CV(A,X)090−16	29,000	12.2	14.5
3040524	24ABB330C30	CSPH*3612A**	58CV(A,X)110−20	29,200	12.2	14.5
3040525	24ABB330C30	CSPH*3612A**	58CV(A,X)135−22	29,200	12.2	14.5
3040526	24ABB330C30	CSPH*3612A**	58CV(A,X)155−22	29,200	12.2	14.5
3689691	24ABB330C30	CSPH*3612A**	58HDV040−−12	29,600	11.5	14.0
3689692	24ABB330C30	CSPH*3612A**	58HDV060−−12	29,600	12.0	14.5
3689693	24ABB330C30	CSPH*3612A**	58HDV080−−20	29,600	12.0	14.5
3689694	24ABB330C30	CSPH*3612A**	58HDV100−−20	29,600	12.0	14.5
3612957	24ABB330C30	CSPH*3612A**	58ME(B,C)040−12	29,000	12.0	14.5
3098984	24ABB330C30	CSPH*3612A**	58ME(B,C)060−12	29,000	12.0	14.5
3098985	24ABB330C30	CSPH*3612A**	58ME(B,C)080−12	29,000	12.0	14.5
3098986	24ABB330C30	CSPH*3612A**	58ME(B,C)080−16	29,000	12.0	14.5
3098983	24ABB330C30	CSPH*3612A**	58MEB040−12	29,000	12.0	14.5
3040517	24ABB330C30	CSPH*3612A**	58MV(B,C)060−14	29,000	12.2	14.5
3040518	24ABB330C30	CSPH*3612A**	58MV(B,C)080−14	29,200	12.2	14.5
3040519	24ABB330C30	CSPH*3612A**	58MV(B,C)080−20	29,200	12.2	14.5
3040520	24ABB330C30	CSPH*3612A**	58MV(B,C)100−20	29,200	12.2	14.5
3040521	24ABB330C30	CSPH*3612A**	58MV(B,C)120−20	29,200	12.2	14.5
3040527	24ABB330C30	CSPH*3612A**	58PH*070−16	29,600	12.0	14.0
3040528	24ABB330C30	CSPH*3612A**	58PH*090−16	29,800	12.2	14.5
4130036	24ABB330C30	CSPH*3612A**	58VLR105−12	29,000	12.0	14.5
4130035	24ABB330C30	CSPH*3612A**	58VMR105−12	29,000	12.0	14.5
4733797	24ABB330C30	CSPH*3612A**	59*N*A060V17**14	29,200	12.0	14.5
4733798	24ABB330C30	CSPH*3612A**	59*N*A080V17**14	29,400	12.0	14.5
4733799	24ABB330C30	CSPH*3612A**	59*N*A100V21**20	29,600	12.0	14.5
4733800	24ABB330C30	CSPH*3612A**	59*N*A120V24**22	29,400	12.0	14.5
4733801	24ABB330C30	CSPH*3612A**	59*P5A060E17**14	29,400	12.0	14.5
4733802	24ABB330C30	CSPH*3612A**	59*P5A080E17**16	29,800	12.0	14.5
4255209	24ABB330C30	CSPH*3612A**	OVLAAB036098	29,000	12.0	14.0
4130040	24ABB330C30	CSPH*3612A**	OVLAAB048112	29,000	12.0	14.5
4130037	24ABB330C30	CSPH*3612A**	OVMAAB036098	29,000	12.0	14.0

See notes on page 36

COMBINATION RATINGS

AHRI Ref. No.	Model Number	Indoor Model	Furnace Model	Capacity	EER	SEER
4130039	24ABB330C30	CSPH*3612A**	OVMAAB042112	29,000	12.0	14.5
3040515	24ABB330C30	CSPH*3612A**+TDR		29,200	11.2	13.2
3874480	24ABB330C30	FB4CNF030		28,000	11.0	13.0
4208544	24ABB330C30	FB4CNF030+TXV		28,000	11.0	13.5
3874481	24ABB330C30	FB4CNF036		28,000	11.0	13.0
4208545	24ABB330C30	FB4CNF036+TXV		28,000	11.0	13.5
3040534	24ABB330C30	FE4AN(B,F)003+UI		29,200	12.2	14.5
3040535	24ABB330C30	FE4AN(B,F)005+UI		30,000	12.5	15.0
3040533	24ABB330C30	FE4ANF002+UI		28,000	12.0	14.0
3040536	24ABB330C30	FE5ANB004+UI		30,000	12.5	15.0
3040537	24ABB330C30	FF1ENP030		28,600	11.0	13.0
3468783	24ABB330C30	FF1ENP031		29,200	12.0	14.0
3040538	24ABB330C30	FF1ENP036		29,200	11.2	13.2
3468784	24ABB330C30	FF1ENP037		29,400	11.7	13.5
3404505	24ABB330C30	FV4CN(B,F)003		29,200	12.2	14.5
3404506	24ABB330C30	FV4CN(B,F)005		30,000	12.5	15.0
3404504	24ABB330C30	FV4CNF002		28,000	12.0	14.0
3752040	24ABB330C30	FX4DN(B,F)031		29,400	12.0	14.5
3752041	24ABB330C30	FX4DN(B,F)037		29,600	12.0	14.5
3752042	24ABB330C30	FX4DN(B,F)043		29,600	11.5	14.0
3874482	24ABB330C30	FY5BNF030		28,000	11.0	13.0
4208546	24ABB330C30	FY5BNF030+TXV		28,000	11.0	13.5
3874483	24ABB330C30	FY5BNF036		28,000	11.0	13.0
4208547	24ABB330C30	FY5BNF036+TXV		28,000	11.0	13.0
3040542	24ABB336C30	†CAP**3617A**+TDR		34,400	10.7	13.0
3040544	24ABB336C30	CAP**3614A**	58CV(A,X)070−12	34,000	11.5	13.5
3040543	24ABB336C30	CAP**3614A**+TDR		34,000	10.7	13.0
3040546	24ABB336C30	CAP**3617A**	58CV(A,X)090−16	34,000	11.7	14.0
3612958	24ABB336C30	CAP**3617A**	58ME(B,C)040−12	34,400	11.7	14.0
3098988	24ABB336C30	CAP**3617A**	58ME(B,C)060−12	34,400	11.7	14.0
3098989	24ABB336C30	CAP**3617A**	58ME(B,C)080−12	34,000	11.7	14.0
3098990	24ABB336C30	CAP**3617A**	58ME(B,C)080−16	34,400	11.7	14.0
3098987	24ABB336C30	CAP**3617A**	58MEB040−12	34,400	11.7	14.0
3040545	24ABB336C30	CAP**3617A**	58MV(B,C)060−14	34,200	11.7	14.0
3040547	24ABB336C30	CAP**3617A**	58PH*070−16	34,200	11.5	13.5
3672997	24ABB336C30	CAP**3617A**	58UVB060−14	34,200	11.7	14.0
4130061	24ABB336C30	CAP**3617A**	58VLR105−12	34,000	11.5	13.5
4130060	24ABB336C30	CAP**3617A**	58VMR105−12	33,600	11.5	13.5
4733831	24ABB336C30	CAP**3617A**	59*N*A060V17**14	33,400	11.4	13.7
4733832	24ABB336C30	CAP**3617A**	59*N*A080V17**14	33,600	11.5	14.0
4733803	24ABB336C30	CAP**3617A**	59*P5A060E17**14	33,800	11.4	13.7
4733804	24ABB336C30	CAP**3617A**	59*P5A080E17**16	33,800	11.5	14.0
4255210	24ABB336C30	CAP**3617A**	OVLAAB036098	33,600	11.0	13.5
4130062	24ABB336C30	CAP**3617A**	OVMAAB036098	33,800	11.0	13.5
4130064	24ABB336C30	CAP**3617A**	OVMAAB042112	33,800	11.0	13.5
3689603	24ABB336C30	CAP**3619A**	58HDV040−−12	34,400	11.0	13.0
3689604	24ABB336C30	CAP**3619A**	58HDV060−−12	34,600	11.0	13.5
4733841	24ABB336C30	CAP**3619A**	59*N*A060V17**14	33,400	11.4	13.7
4733842	24ABB336C30	CAP**3619A**	59*N*A080V17**14	33,600	11.5	14.0
4733843	24ABB336C30	CAP**3619A**	59*N*A100V21**20	33,800	11.7	14.2
4733809	24ABB336C30	CAP**3619A**	59*P5A060E17**14	33,800	11.4	13.7
4733810	24ABB336C30	CAP**3619A**	59*P5A080E17**16	33,800	11.5	14.0
3689602	24ABB336C30	CAP**3619A**+TDR		34,600	11.0	13.0
3040552	24ABB336C30	CAP**3621A**	58CV(A,X)110−20	34,200	11.7	14.0
3098991	24ABB336C30	CAP**3621A**	58ME(B,C)100−20	34,400	12.0	14.5
3040549	24ABB336C30	CAP**3621A**	58MV(B,C)080−14	34,200	11.7	14.0
3040550	24ABB336C30	CAP**3621A**	58MV(B,C)080−20	34,000	11.7	14.0
3040551	24ABB336C30	CAP**3621A**	58MV(B,C)100−20	34,200	11.7	14.0
3040553	24ABB336C30	CAP**3621A**	58PH*090−16	34,400	11.7	14.0
3040554	24ABB336C30	CAP**3621A**	58PH*110−20	34,600	12.0	14.0
3672998	24ABB336C30	CAP**3621A**	58UVB080−14	34,200	11.7	14.0
3672999	24ABB336C30	CAP**3621A**	58UVB080−20	34,000	11.7	14.0
3673000	24ABB336C30	CAP**3621A**	58UVB100−20	34,200	11.7	14.0
4130066	24ABB336C30	CAP**3621A**	58VLR120−20	34,000	11.7	14.0
4130065	24ABB336C30	CAP**3621A**	58VMR120−20	33,800	11.7	14.0
4733833	24ABB336C30	CAP**3621A**	59*N*A060V17**14	33,400	11.5	14.0
4733834	24ABB336C30	CAP**3621A**	59*N*A080V17**14	33,600	11.7	14.2
4733835	24ABB336C30	CAP**3621A**	59*N*A100V21**20	33,800	11.8	14.2
4733805	24ABB336C30	CAP**3621A**	59*P5A060E17**14	34,000	11.5	14.0
4733806	24ABB336C30	CAP**3621A**	59*P5A080E17**16	34,000	11.5	14.0
4130067	24ABB336C30	CAP**3621A**	OVLAAB048112	34,000	11.5	13.5
3040548	24ABB336C30	CAP**3621A**+TDR		34,400	10.7	13.0

See notes on page 36

COMBINATION RATINGS

AHRI Ref. No.	Model Number	Indoor Model	Furnace Model	Capacity	EER	SEER
3040559	24ABB336C30	CAP**4221A**	58CV(A,X)110−20	34,400	11.7	14.0
3098992	24ABB336C30	CAP**4221A**	58ME(B,C)100−20	34,400	12.0	14.5
3040556	24ABB336C30	CAP**4221A**	58MV(B,C)080−14	34,400	11.7	14.0
3040557	24ABB336C30	CAP**4221A**	58MV(B,C)080−20	34,400	11.7	14.0
3040558	24ABB336C30	CAP**4221A**	58MV(B,C)100−20	34,400	11.7	14.0
3673001	24ABB336C30	CAP**4221A**	58UVB080−14	34,400	11.7	14.0
3673002	24ABB336C30	CAP**4221A**	58UVB080−20	34,400	11.7	14.0
3673003	24ABB336C30	CAP**4221A**	58UVB100−20	34,400	11.7	14.0
4733836	24ABB336C30	CAP**4221A**	59*N*A060V17**14	33,800	11.5	14.0
4733837	24ABB336C30	CAP**4221A**	59*N*A080V17**14	33,800	11.7	14.2
4733838	24ABB336C30	CAP**4221A**	59*N*A100V21**20	34,000	11.8	14.2
4733807	24ABB336C30	CAP**4221A**	59*P5A060E17**14	34,200	11.5	14.0
4733808	24ABB336C30	CAP**4221A**	59*P5A080E17**16	34,200	11.7	14.2
4130068	24ABB336C30	CAP**4221A**	OVLAAB048112	34,400	11.5	13.5
3040555	24ABB336C30	CAP**4221A**+TDR		34,600	10.7	13.0
4733839	24ABB336C30	CAP**4224A**	59*N*A100V21**20	34,000	11.8	14.2
4733840	24ABB336C30	CAP**4224A**	59*N*A120V24**22	34,000	12.0	14.5
3689653	24ABB336C30	CAP**4823A**	58HDV080−−20	35,200	11.5	14.0
3689652	24ABB336C30	CAP**4823A**+TDR		35,200	11.0	13.0
4130147	24ABB336C30	CNPH*3617A**	58HDV040−−12	33,600	11.0	13.0
4130148	24ABB336C30	CNPH*3617A**	58HDV060−−12	33,800	11.0	13.2
4130149	24ABB336C30	CNPH*3617A**	58HDV080−−20	34,200	11.0	13.5
4130150	24ABB336C30	CNPH*3617A**	58HDV100−−20	34,000	11.0	13.5
3612961	24ABB336C30	CNPH*3617A**	58ME(B,C)040−12	34,000	11.7	14.0
3099008	24ABB336C30	CNPH*3617A**	58ME(B,C)060−12	34,000	11.7	14.0
3099009	24ABB336C30	CNPH*3617A**	58ME(B,C)080−12	34,000	11.7	14.0
3099010	24ABB336C30	CNPH*3617A**	58ME(B,C)080−16	34,000	11.7	14.0
3099011	24ABB336C30	CNPH*3617A**	58ME(B,C)100−20	34,000	11.7	14.0
3099007	24ABB336C30	CNPH*3617A**	58MEB040−12	34,000	11.7	14.0
4130091	24ABB336C30	CNPH*3617A**	58VLR105−12	33,800	11.0	13.5
4130093	24ABB336C30	CNPH*3617A**	58VLR120−20	33,800	11.7	14.0
4130090	24ABB336C30	CNPH*3617A**	58VMR105−12	33,600	11.0	13.5
4130092	24ABB336C30	CNPH*3617A**	58VMR120−20	33,600	11.0	13.5
4733858	24ABB336C30	CNPH*3617A**	59*N*A060V17**14	33,400	11.4	13.7
4733859	24ABB336C30	CNPH*3617A**	59*N*A080V17**14	33,400	11.5	14.0
4733860	24ABB336C30	CNPH*3617A**	59*N*A100V21**20	33,600	11.5	14.0
4733861	24ABB336C30	CNPH*3617A**	59*N*A120V24**22	33,600	11.7	14.2
4733821	24ABB336C30	CNPH*3617A**	59*P5A060E17**14	33,600	11.4	13.7
4733822	24ABB336C30	CNPH*3617A**	59*P5A080E17**16	33,800	11.4	13.7
4255214	24ABB336C30	CNPH*3617A**	OVLAAB036098	33,600	11.0	13.2
4130097	24ABB336C30	CNPH*3617A**	OVLAAB048112	34,000	11.0	13.5
4130098	24ABB336C30	CNPH*3617A**	OVLAAB060154	34,600	11.0	13.5
4130094	24ABB336C30	CNPH*3617A**	OVMAAB036098	33,600	11.0	13.2
4130096	24ABB336C30	CNPH*3617A**	OVMAAB042112	33,800	11.0	13.5
4130151	24ABB336C30	CNPH*4221A**	58HDV040−−12	34,000	11.0	13.2
4130152	24ABB336C30	CNPH*4221A**	58HDV060−−12	34,400	11.0	13.5
4130153	24ABB336C30	CNPH*4221A**	58HDV080−−20	34,800	11.5	13.5
4130154	24ABB336C30	CNPH*4221A**	58HDV100−−20	34,600	11.7	14.0
3612962	24ABB336C30	CNPH*4221A**	58ME(B,C)040−12	34,400	11.7	14.0
3099013	24ABB336C30	CNPH*4221A**	58ME(B,C)060−12	34,400	11.7	14.0
3099014	24ABB336C30	CNPH*4221A**	58ME(B,C)080−12	34,400	11.7	14.0
3099015	24ABB336C30	CNPH*4221A**	58ME(B,C)080−16	34,400	11.7	14.0
3099016	24ABB336C30	CNPH*4221A**	58ME(B,C)100−20	34,400	12.0	14.5
3099012	24ABB336C30	CNPH*4221A**	58MEB040−12	34,400	11.7	14.0
4130100	24ABB336C30	CNPH*4221A**	58VLR120−20	34,200	11.7	14.0
4130099	24ABB336C30	CNPH*4221A**	58VMR120−20	34,200	11.7	14.0
4733862	24ABB336C30	CNPH*4221A**	59*N*A060V17**14	33,800	11.5	14.0
4733863	24ABB336C30	CNPH*4221A**	59*N*A080V17**14	33,800	11.7	14.2
4733864	24ABB336C30	CNPH*4221A**	59*N*A100V21**20	34,000	11.8	14.2
4733865	24ABB336C30	CNPH*4221A**	59*N*A120V24**22	34,000	11.9	14.5
4733823	24ABB336C30	CNPH*4221A**	59*P5A060E17**14	34,200	11.5	14.0
4733824	24ABB336C30	CNPH*4221A**	59*P5A080E17**16	34,200	11.5	14.0
4255215	24ABB336C30	CNPH*4221A**	OVLAAB036098	34,000	11.0	13.5
4130104	24ABB336C30	CNPH*4221A**	OVLAAB048112	34,400	11.0	13.5
4130105	24ABB336C30	CNPH*4221A**	OVLAAB060154	35,000	11.7	14.0
4130101	24ABB336C30	CNPH*4221A**	OVMAAB036098	34,000	11.0	13.5
4130103	24ABB336C30	CNPH*4221A**	OVMAAB042112	34,200	11.5	13.5
3689626	24ABB336C30	CNPH*4321A**	58CV(A,X)070−12	35,200	12.0	14.5
3689627	24ABB336C30	CNPH*4321A**	58CV(A,X)090−16	35,200	12.0	14.5
3689628	24ABB336C30	CNPH*4321A**	58CV(A,X)110−20	35,200	12.0	14.5
3689629	24ABB336C30	CNPH*4321A**	58CV(A,X)135−22	35,200	12.0	14.5
3689630	24ABB336C30	CNPH*4321A**	58CV(A,X)155−22	35,200	12.0	14.5
3689640	24ABB336C30	CNPH*4321A**	58HDV040−−12	35,200	11.0	13.5

See notes on page 36

COMBINATION RATINGS

AHRI Ref. No.	Model Number	Indoor Model	Furnace Model	Capacity	EER	SEER
3689641	24ABB336C30	CNPH*4321A**	58HDV060−−12	35,200	11.5	14.0
3689642	24ABB336C30	CNPH*4321A**	58HDV080−−20	35,200	11.5	14.0
3689643	24ABB336C30	CNPH*4321A**	58HDV100−−20	35,200	11.5	14.0
3689636	24ABB336C30	CNPH*4321A**	58ME(B,C)060−12	35,200	12.0	14.5
3689637	24ABB336C30	CNPH*4321A**	58ME(B,C)080−12	35,200	12.0	14.5
3689638	24ABB336C30	CNPH*4321A**	58ME(B,C)080−16	35,200	12.0	14.5
3689639	24ABB336C30	CNPH*4321A**	58ME(B,C)100−20	35,200	12.0	14.5
3689635	24ABB336C30	CNPH*4321A**	58MEB040−12	35,200	12.0	14.5
3689621	24ABB336C30	CNPH*4321A**	58MV(B,C)060−14	35,200	12.0	14.5
3689622	24ABB336C30	CNPH*4321A**	58MV(B,C)080−14	35,200	12.0	14.5
3689623	24ABB336C30	CNPH*4321A**	58MV(B,C)080−20	35,200	12.0	14.5
3689624	24ABB336C30	CNPH*4321A**	58MV(B,C)100−20	35,200	12.0	14.5
3689625	24ABB336C30	CNPH*4321A**	58MV(B,C)120−20	35,200	12.0	14.5
3689620	24ABB336C30	CNPH*4321A**	58MVB040−14	35,200	12.0	14.5
3689631	24ABB336C30	CNPH*4321A**	58PH*045−08	35,200	11.5	14.0
3689632	24ABB336C30	CNPH*4321A**	58PH*070−16	35,200	11.5	14.0
3689633	24ABB336C30	CNPH*4321A**	58PH*090−16	35,200	12.0	14.5
3689634	24ABB336C30	CNPH*4321A**	58PH*110−20	35,200	12.0	14.5
4130107	24ABB336C30	CNPH*4321A**	58VLR105−12	35,400	11.7	14.0
4130109	24ABB336C30	CNPH*4321A**	58VLR120−20	35,200	12.0	14.5
4130106	24ABB336C30	CNPH*4321A**	58VMR105−12	35,000	11.7	14.0
4130108	24ABB336C30	CNPH*4321A**	58VMR120−20	35,000	12.0	14.5
4733866	24ABB336C30	CNPH*4321A**	59*N*A060V17**14	34,600	11.9	14.5
4733867	24ABB336C30	CNPH*4321A**	59*N*A080V17**14	34,800	12.0	14.5
4733868	24ABB336C30	CNPH*4321A**	59*N*A100V21**20	35,000	12.0	14.5
4733869	24ABB336C30	CNPH*4321A**	59*N*A120V24**22	35,000	12.0	14.5
4733825	24ABB336C30	CNPH*4321A**	59*P5A060E17**14	35,200	11.8	14.2
4733826	24ABB336C30	CNPH*4321A**	59*P5A080E17**16	35,200	12.0	14.5
4255216	24ABB336C30	CNPH*4321A**	OVLAAB036098	35,000	11.7	14.0
4130113	24ABB336C30	CNPH*4321A**	OVLAAB048112	35,400	11.7	14.0
4130114	24ABB336C30	CNPH*4321A**	OVLAAB060154	36,200	12.0	14.5
4130110	24ABB336C30	CNPH*4321A**	OVMAAB036098	35,000	11.7	14.0
4130112	24ABB336C30	CNPH*4321A**	OVMAAB042112	35,200	11.7	14.0
3689619	24ABB336C30	CNPH*4321A**+TDR		35,200	11.0	13.5
4130133	24ABB336C30	CNPV*3617A**	58HDV040−−12	33,600	11.0	13.0
4130134	24ABB336C30	CNPV*3617A**	58HDV060−−12	33,800	11.0	13.2
3612959	24ABB336C30	CNPV*3617A**	58ME(B,C)040−12	34,000	11.7	14.0
3098994	24ABB336C30	CNPV*3617A**	58ME(B,C)060−12	34,000	11.7	14.0
3098995	24ABB336C30	CNPV*3617A**	58ME(B,C)080−12	34,000	11.7	14.0
3098996	24ABB336C30	CNPV*3617A**	58ME(B,C)080−16	34,000	11.7	14.0
3098993	24ABB336C30	CNPV*3617A**	58MEB040−12	34,000	11.7	14.0
4130070	24ABB336C30	CNPV*3617A**	58VLR105−12	33,800	11.0	13.5
4130069	24ABB336C30	CNPV*3617A**	58VMR105−12	33,600	11.0	13.5
4733844	24ABB336C30	CNPV*3617A**	59*N*A060V17**14	33,400	11.4	13.7
4733845	24ABB336C30	CNPV*3617A**	59*N*A080V17**14	33,400	11.5	14.0
4733811	24ABB336C30	CNPV*3617A**	59*P5A060E17**14	33,600	11.4	13.7
4733812	24ABB336C30	CNPV*3617A**	59*P5A080E17**16	33,800	11.4	13.7
4255211	24ABB336C30	CNPV*3617A**	OVLAAB036098	33,600	11.0	13.2
4130071	24ABB336C30	CNPV*3617A**	OVMAAB036098	33,600	11.0	13.2
4130073	24ABB336C30	CNPV*3617A**	OVMAAB042112	33,800	11.0	13.5
4130135	24ABB336C30	CNPV*3621A**	58HDV040−−12	33,600	11.0	13.2
4130136	24ABB336C30	CNPV*3621A**	58HDV060−−12	33,800	11.0	13.2
4130137	24ABB336C30	CNPV*3621A**	58HDV080−−20	34,200	11.0	13.5
3098997	24ABB336C30	CNPV*3621A**	58ME(B,C)100−20	34,000	11.7	14.0
4130075	24ABB336C30	CNPV*3621A**	58VLR120−20	33,800	11.7	14.0
4130074	24ABB336C30	CNPV*3621A**	58VMR120−20	33,800	11.5	13.5
4733846	24ABB336C30	CNPV*3621A**	59*N*A060V17**14	33,400	11.4	13.7
4733847	24ABB336C30	CNPV*3621A**	59*N*A080V17**14	33,600	11.5	14.0
4733848	24ABB336C30	CNPV*3621A**	59*N*A100V21**20	33,600	11.5	14.0
4733813	24ABB336C30	CNPV*3621A**	59*P5A060E17**14	33,800	11.4	13.7
4733814	24ABB336C30	CNPV*3621A**	59*P5A080E17**16	33,800	11.5	14.0
4130076	24ABB336C30	CNPV*3621A**	OVLAAB048112	34,000	11.0	13.5
3689607	24ABB336C30	CNPV*3717A**	58CV(A,X)090−16	35,000	12.0	14.5
4130138	24ABB336C30	CNPV*3717A**	58HDV040−−12	35,000	11.0	13.5
4130139	24ABB336C30	CNPV*3717A**	58HDV060−−12	35,400	11.5	14.0
3689610	24ABB336C30	CNPV*3717A**	58ME(B,C)060−12	35,000	12.0	14.5
3689611	24ABB336C30	CNPV*3717A**	58ME(B,C)080−12	35,000	12.0	14.5
3689612	24ABB336C30	CNPV*3717A**	58ME(B,C)080−16	35,000	12.0	14.5
3689609	24ABB336C30	CNPV*3717A**	58MEB040−12	35,000	12.0	14.5
3689606	24ABB336C30	CNPV*3717A**	58MV(B,C)060−14	35,000	12.0	14.5
3689608	24ABB336C30	CNPV*3717A**	58PH*070−16	35,000	11.5	14.0
3689751	24ABB336C30	CNPV*3717A**	58UVB060−14	35,000	12.0	14.5
4130078	24ABB336C30	CNPV*3717A**	58VLR105−12	35,400	11.7	14.0

See notes on page 36

COMBINATION RATINGS

AHRI Ref. No.	Model Number	Indoor Model	Furnace Model	Capacity	EER	SEER
4130077	24ABB336C30	CNPV*3717A**	58VMR105−12	34,800	11.7	14.0
4733849	24ABB336C30	CNPV*3717A**	59*N*A060V17**14	34,600	11.8	14.2
4733850	24ABB336C30	CNPV*3717A**	59*N*A080V17**14	34,800	12.0	14.5
4733815	24ABB336C30	CNPV*3717A**	59*P5A060E17**14	35,200	11.8	14.2
4733816	24ABB336C30	CNPV*3717A**	59*P5A080E17**16	35,200	12.0	14.5
4255212	24ABB336C30	CNPV*3717A**	OVLAAB036098	35,000	11.5	14.0
4130079	24ABB336C30	CNPV*3717A**	OVMAAB036098	35,000	11.5	14.0
4130081	24ABB336C30	CNPV*3717A**	OVMAAB042112	35,200	11.7	14.0
3689605	24ABB336C30	CNPV*3717A**+TDR		35,000	11.0	13.5
3099000	24ABB336C30	CNPV*4217A**	58CV(A,X)090−16	34,400	11.7	14.0
4130140	24ABB336C30	CNPV*4217A**	58HDV040−−12	34,400	11.0	13.2
4130141	24ABB336C30	CNPV*4217A**	58HDV060−−12	34,600	11.0	13.5
3612960	24ABB336C30	CNPV*4217A**	58ME(B,C)040−12	34,400	11.7	14.0
3099003	24ABB336C30	CNPV*4217A**	58ME(B,C)060−12	34,400	11.7	14.0
3099004	24ABB336C30	CNPV*4217A**	58ME(B,C)080−12	34,400	11.7	14.0
3099005	24ABB336C30	CNPV*4217A**	58ME(B,C)080−16	34,400	11.7	14.0
3099002	24ABB336C30	CNPV*4217A**	58MEB040−12	34,400	11.7	14.0
3098999	24ABB336C30	CNPV*4217A**	58MV(B,C)060−14	34,400	11.7	14.0
3099001	24ABB336C30	CNPV*4217A**	58PH*070−16	34,400	11.7	14.0
3756823	24ABB336C30	CNPV*4217A**	58UVB060−14	34,400	11.7	14.0
4130083	24ABB336C30	CNPV*4217A**	58VLR105−12	34,600	11.5	14.0
4130082	24ABB336C30	CNPV*4217A**	58VMR105−12	34,200	11.5	14.0
4733851	24ABB336C30	CNPV*4217A**	59*N*A060V17**14	34,000	11.5	14.0
4733852	24ABB336C30	CNPV*4217A**	59*N*A080V17**14	34,200	11.8	14.2
4733817	24ABB336C30	CNPV*4217A**	59*P5A060E17**14	34,400	11.5	14.0
4733818	24ABB336C30	CNPV*4217A**	59*P5A080E17**16	34,400	11.7	14.2
4255213	24ABB336C30	CNPV*4217A**	OVLAAB036098	34,200	11.0	13.5
4130084	24ABB336C30	CNPV*4217A**	OVMAAB036098	34,400	11.0	13.5
4130086	24ABB336C30	CNPV*4217A**	OVMAAB042112	34,400	11.5	14.0
3098998	24ABB336C30	CNPV*4217A**+TDR		34,400	11.0	13.0
4130142	24ABB336C30	CNPV*4221A**	58HDV040−−12	34,000	11.0	13.2
4130143	24ABB336C30	CNPV*4221A**	58HDV060−−12	34,400	11.0	13.5
4130144	24ABB336C30	CNPV*4221A**	58HDV080−−20	34,800	11.5	13.5
3099006	24ABB336C30	CNPV*4221A**	58ME(B,C)100−20	34,400	12.0	14.5
4130088	24ABB336C30	CNPV*4221A**	58VLR120−20	34,200	11.7	14.0
4130087	24ABB336C30	CNPV*4221A**	58VMR120−20	34,200	11.7	14.0
4733853	24ABB336C30	CNPV*4221A**	59*N*A060V17**14	33,800	11.5	14.0
4733854	24ABB336C30	CNPV*4221A**	59*N*A080V17**14	33,800	11.7	14.2
4733855	24ABB336C30	CNPV*4221A**	59*N*A100V21**20	34,000	11.8	14.2
4733819	24ABB336C30	CNPV*4221A**	59*P5A060E17**14	34,200	11.5	14.0
4733820	24ABB336C30	CNPV*4221A**	59*P5A080E17**16	34,200	11.5	14.0
4130089	24ABB336C30	CNPV*4221A**	OVLAAB048112	34,400	11.0	13.5
3689616	24ABB336C30	CNPV*4324A**	58CV(A,X)135−22	35,200	12.0	14.5
3689617	24ABB336C30	CNPV*4324A**	58CV(A,X)155−22	35,200	12.0	14.5
4130145	24ABB336C30	CNPV*4324A**	58HDV080−−20	36,000	12.0	14.5
4130146	24ABB336C30	CNPV*4324A**	58HDV100−−20	35,800	12.0	14.5
3689618	24ABB336C30	CNPV*4324A**	58HDV100−−20 (DWNFLW ONLY)	35,200	12.0	14.5
3689615	24ABB336C30	CNPV*4324A**	58MV(B,C)120−20	35,200	12.0	14.5
3689614	24ABB336C30	CNPV*4324A**	58MVB040−14	35,200	12.0	14.5
3689752	24ABB336C30	CNPV*4324A**	58UVB120−20	35,200	12.0	14.5
4733856	24ABB336C30	CNPV*4324A**	59*N*A100V21**20	35,000	12.0	14.5
4733857	24ABB336C30	CNPV*4324A**	59*N*A120V24**22	35,000	12.3	15.0
4130155	24ABB336C30	CNPV*4324A**	OVLAAB048112	34,600	12.0	14.5
4130156	24ABB336C30	CNPV*4324A**	OVLAAB060154	34,600	12.0	14.5
3689613	24ABB336C30	CNPV*4324A**+TDR		35,200	11.0	13.5
3689644	24ABB336C30	CSPH*3612A**	58HDV040−−12	34,600	11.0	13.5
3689645	24ABB336C30	CSPH*3612A**	58HDV060−−12	34,600	11.5	14.0
3689646	24ABB336C30	CSPH*3612A**	58HDV080−−20	34,600	11.5	14.0
3689647	24ABB336C30	CSPH*3612A**	58HDV100−−20	34,600	11.5	14.0
3612963	24ABB336C30	CSPH*3612A**	58ME(B,C)040−12	34,400	12.0	14.5
3099018	24ABB336C30	CSPH*3612A**	58ME(B,C)060−12	34,400	11.7	14.0
3099019	24ABB336C30	CSPH*3612A**	58ME(B,C)080−12	34,400	11.7	14.0
3099020	24ABB336C30	CSPH*3612A**	58ME(B,C)080−16	34,400	11.7	14.0
3099021	24ABB336C30	CSPH*3612A**	58ME(B,C)100−20	34,400	11.7	14.0
3099017	24ABB336C30	CSPH*3612A**	58MEB040−12	34,400	12.0	14.5
4130116	24ABB336C30	CSPH*3612A**	58VLR105−12	34,800	11.7	14.0
4130118	24ABB336C30	CSPH*3612A**	58VLR120−20	34,600	12.0	14.5
4130115	24ABB336C30	CSPH*3612A**	58VMR105−12	34,400	11.7	14.0
4130117	24ABB336C30	CSPH*3612A**	58VMR120−20	34,600	11.7	14.0
4733870	24ABB336C30	CSPH*3612A**	59*N*A060V17**14	34,200	11.7	14.2
4733871	24ABB336C30	CSPH*3612A**	59*N*A080V17**14	34,400	11.8	14.2
4733872	24ABB336C30	CSPH*3612A**	59*N*A100V21**20	34,400	11.9	14.5
4733873	24ABB336C30	CSPH*3612A**	59*N*A120V24**22	34,400	12.0	14.5

See notes on page 36

COMBINATION RATINGS

AHRI Ref. No.	Model Number	Indoor Model	Furnace Model	Capacity	EER	SEER
4733827	24ABB336C30	CSPH*3612A**	59*P5A060E17**14	34,600	11.7	14.2
4733828	24ABB336C30	CSPH*3612A**	59*P5A080E17**16	34,600	11.8	14.2
4255217	24ABB336C30	CSPH*3612A**	OVLAAB036098	34,400	11.0	13.5
4130122	24ABB336C30	CSPH*3612A**	OVLAAB048112	34,800	11.0	14.0
4130123	24ABB336C30	CSPH*3612A**	OVLAAB060154	35,600	11.7	14.0
4130119	24ABB336C30	CSPH*3612A**	OVMAAB036098	34,600	11.0	13.5
4130121	24ABB336C30	CSPH*3612A**	OVMAAB042112	34,600	11.7	14.0
3689648	24ABB336C30	CSPH*4212A**	58HDV040−−12	34,800	11.0	13.5
3689649	24ABB336C30	CSPH*4212A**	58HDV060−−12	34,800	11.5	14.0
3689650	24ABB336C30	CSPH*4212A**	58HDV080−−20	34,800	11.5	14.0
3689651	24ABB336C30	CSPH*4212A**	58HDV100−−20	34,800	12.0	14.5
3612964	24ABB336C30	CSPH*4212A**	58ME(B,C)040−12	34,400	11.7	14.0
3099023	24ABB336C30	CSPH*4212A**	58ME(B,C)060−12	34,400	11.7	14.0
3099024	24ABB336C30	CSPH*4212A**	58ME(B,C)080−12	34,400	11.7	14.0
3099025	24ABB336C30	CSPH*4212A**	58ME(B,C)080−16	34,400	12.0	14.5
3099026	24ABB336C30	CSPH*4212A**	58ME(B,C)100−20	34,400	12.0	14.5
3099022	24ABB336C30	CSPH*4212A**	58MEB040−12	34,400	11.7	14.0
4130125	24ABB336C30	CSPH*4212A**	58VLR105−12	35,000	11.7	14.0
4130127	24ABB336C30	CSPH*4212A**	58VLR120−20	34,800	12.0	14.5
4130124	24ABB336C30	CSPH*4212A**	58VMR105−12	34,600	11.7	14.0
4130126	24ABB336C30	CSPH*4212A**	58VMR120−20	34,800	11.7	14.0
4733874	24ABB336C30	CSPH*4212A**	59*N*A060V17**14	34,400	11.8	14.2
4733875	24ABB336C30	CSPH*4212A**	59*N*A080V17**14	34,600	11.9	14.5
4733876	24ABB336C30	CSPH*4212A**	59*N*A100V21**20	34,600	12.0	14.5
4733877	24ABB336C30	CSPH*4212A**	59*N*A120V24**22	34,600	12.0	14.5
4733829	24ABB336C30	CSPH*4212A**	59*P5A060E17**14	34,800	11.8	14.2
4733830	24ABB336C30	CSPH*4212A**	59*P5A080E17**16	34,800	11.8	14.2
4255218	24ABB336C30	CSPH*4212A**	OVLAAB036098	34,600	11.0	13.5
4130131	24ABB336C30	CSPH*4212A**	OVLAAB048112	35,000	11.7	14.0
4130132	24ABB336C30	CSPH*4212A**	OVLAAB060154	35,800	12.0	14.5
4130128	24ABB336C30	CSPH*4212A**	OVMAAB036098	34,800	11.0	13.5
4130130	24ABB336C30	CSPH*4212A**	OVMAAB042112	34,800	11.7	14.0
3867393	24ABB336C30	FB4CNF036		33,800	11.0	13.0
4208548	24ABB336C30	FB4CNF036+TXV		33,800	11.0	13.5
3867397	24ABB336C30	FB4CNF042		34,000	11.0	13.0
4208549	24ABB336C30	FB4CNF042+TXV		34,000	11.0	13.5
3227239	24ABB336C30	FE4AN(B,F)003+UI		34,400	12.0	14.5
3227240	24ABB336C30	FE4AN(B,F)005+UI		35,600	12.2	14.5
3227241	24ABB336C30	FE4ANB006+UI		36,000	12.5	15.0
3227238	24ABB336C30	FE4ANF002+UI		33,400	11.5	13.5
3227242	24ABB336C30	FE5ANB004+UI		35,800	12.5	15.0
3227243	24ABB336C30	FF1ENP036		34,200	11.0	13.2
3468785	24ABB336C30	FF1ENP037		34,200	11.7	13.5
3404566	24ABB336C30	FV4CN(B,F)003		34,400	12.0	14.5
3404567	24ABB336C30	FV4CN(B,F)005		35,600	12.2	14.5
3404568	24ABB336C30	FV4CNB006		36,000	12.5	15.0
3404565	24ABB336C30	FV4CNF002		33,400	11.5	13.5
3752043	24ABB336C30	FX4DN(B,F)037		35,000	11.5	14.0
3752044	24ABB336C30	FX4DN(B,F)043		35,000	11.5	14.0
3752045	24ABB336C30	FX4DN(B,F)049		35,400	12.0	14.5
3867401	24ABB336C30	FY5BNF036		34,000	11.0	13.0
4208550	24ABB336C30	FY5BNF036+TXV		34,000	11.0	13.5
3867405	24ABB336C30	FY5BNF042		34,000	11.0	13.0
4208551	24ABB336C30	FY5BNF042+TXV		34,000	11.0	13.5
3043029	24ABB342C30	†CAP**4221A**+TDR		40,500	10.5	13.0
3043036	24ABB342C30	CAP**4221A**	58CV(A,X)110−20	40,500	11.2	13.5
3099027	24ABB342C30	CAP**4221A**	58ME(B,C)100−20	40,500	11.5	14.0
3043033	24ABB342C30	CAP**4221A**	58MV(B,C)080−14	40,000	11.0	13.2
3043034	24ABB342C30	CAP**4221A**	58MV(B,C)080−20	40,500	11.0	13.5
3043035	24ABB342C30	CAP**4221A**	58MV(B,C)100−20	40,000	11.2	13.5
3043037	24ABB342C30	CAP**4221A**	58PH*090−16	40,500	11.2	13.5
3043038	24ABB342C30	CAP**4221A**	58PH*110−20	40,500	11.2	13.5
3673013	24ABB342C30	CAP**4221A**	58UVB080−14	40,000	11.0	13.2
3673014	24ABB342C30	CAP**4221A**	58UVB080−20	40,500	11.0	13.5
3673015	24ABB342C30	CAP**4221A**	58UVB100−20	40,000	11.2	13.5
4130158	24ABB342C30	CAP**4221A**	58VLR120−20	40,000	11.0	13.5
4130157	24ABB342C30	CAP**4221A**	58VMR120−20	40,000	11.0	13.5
4733924	24ABB342C30	CAP**4221A**	59*N*A060V17**14	39,500	10.9	13.0
4733925	24ABB342C30	CAP**4221A**	59*N*A080V17**14	39,500	11.0	13.3
4733926	24ABB342C30	CAP**4221A**	59*N*A100V21**20	40,000	11.2	13.5
4733878	24ABB342C30	CAP**4221A**	59*P5A060E17**14	39,500	11.0	13.3
4733879	24ABB342C30	CAP**4221A**	59*P5A080E17**16	40,000	11.0	13.3

See notes on page 36

COMBINATION RATINGS

AHRI Ref. No.	Model Number	Indoor Model	Furnace Model	Capacity	EER	SEER
4733880	24ABB342C30	CAP**4221A**	59*P5A100E21**16	40,000	11.1	13.5
4130159	24ABB342C30	CAP**4221A**	OVLAAB048112	40,500	10.7	13.0
3043042	24ABB342C30	CAP**4224A**	58CV(A,X)135−22	40,500	11.5	13.5
3043043	24ABB342C30	CAP**4224A**	58CV(A,X)155−22	40,500	11.5	13.5
3099028	24ABB342C30	CAP**4224A**	58ME(B,C)120−20	40,500	11.5	14.0
3043041	24ABB342C30	CAP**4224A**	58MV(B,C)120−20	40,500	11.2	13.5
3043044	24ABB342C30	CAP**4224A**	58PH*135−20	40,500	11.2	13.5
3673016	24ABB342C30	CAP**4224A**	58UVB120−20	40,500	11.2	13.5
4733927	24ABB342C30	CAP**4224A**	59*N*A100V21**20	40,000	11.2	13.7
4733928	24ABB342C30	CAP**4224A**	59*N*A120V24**22	40,000	11.3	13.7
4733881	24ABB342C30	CAP**4224A**	59*P5A100E21**16	40,000	11.1	13.5
4733882	24ABB342C30	CAP**4224A**	59*P5A120E24**22	40,500	11.3	13.7
3043039	24ABB342C30	CAP**4224A**+TDR		40,500	10.5	13.0
3043047	24ABB342C30	CAP**4817A**	58CV(A,X)090−16	41,500	11.5	13.5
3612965	24ABB342C30	CAP**4817A**	58ME(B,C)040−12	40,500	11.5	14.0
3099030	24ABB342C30	CAP**4817A**	58ME(B,C)060−12	40,500	11.5	14.0
3099031	24ABB342C30	CAP**4817A**	58ME(B,C)080−12	40,500	11.5	14.0
3099032	24ABB342C30	CAP**4817A**	58ME(B,C)080−16	40,500	11.5	14.0
3099029	24ABB342C30	CAP**4817A**	58MEB040−12	40,500	11.5	14.0
3043046	24ABB342C30	CAP**4817A**	58MV(B,C)060−14	41,500	11.2	13.5
3043048	24ABB342C30	CAP**4817A**	58PH*070−16	41,500	11.0	13.2
3673017	24ABB342C30	CAP**4817A**	58UVB060−14	41,500	11.2	13.5
4733929	24ABB342C30	CAP**4817A**	59*N*A060V17**14	40,500	11.1	13.5
4733930	24ABB342C30	CAP**4817A**	59*N*A080V17**14	40,500	11.3	13.7
4733883	24ABB342C30	CAP**4817A**	59*P5A060E17**14	41,000	11.2	13.5
4733884	24ABB342C30	CAP**4817A**	59*P5A080E17**16	41,000	11.2	13.7
4130160	24ABB342C30	CAP**4817A**	OVMAAB042112	41,000	11.0	13.5
3043045	24ABB342C30	CAP**4817A**+TDR		40,500	10.7	13.0
3043053	24ABB342C30	CAP**4821A**	58CV(A,X)110−20	41,000	11.5	13.5
3099033	24ABB342C30	CAP**4821A**	58ME(B,C)100−20	40,500	11.5	14.0
3043050	24ABB342C30	CAP**4821A**	58MV(B,C)080−14	41,000	11.2	13.5
3043051	24ABB342C30	CAP**4821A**	58MV(B,C)080−20	41,000	11.2	13.5
3043052	24ABB342C30	CAP**4821A**	58MV(B,C)100−20	40,500	11.2	13.5
3043054	24ABB342C30	CAP**4821A**	58PH*090−16	41,000	11.5	14.0
3043055	24ABB342C30	CAP**4821A**	58PH*110−20	41,500	11.5	14.0
3673018	24ABB342C30	CAP**4821A**	58UVB080−14	41,000	11.2	13.5
3673019	24ABB342C30	CAP**4821A**	58UVB080−20	41,000	11.2	13.5
3673020	24ABB342C30	CAP**4821A**	58UVB100−20	40,500	11.2	13.5
4130162	24ABB342C30	CAP**4821A**	58VLR120−20	41,000	11.0	13.5
4130161	24ABB342C30	CAP**4821A**	58VMR120−20	40,500	11.0	13.5
4733931	24ABB342C30	CAP**4821A**	59*N*A060V17**14	40,000	11.1	13.5
4733932	24ABB342C30	CAP**4821A**	59*N*A080V17**14	40,500	11.2	13.7
4733933	24ABB342C30	CAP**4821A**	59*N*A100V21**20	40,500	11.4	13.7
4733885	24ABB342C30	CAP**4821A**	59*P5A060E17**14	40,500	11.1	13.5
4733886	24ABB342C30	CAP**4821A**	59*P5A080E17**16	41,000	11.1	13.5
4733887	24ABB342C30	CAP**4821A**	59*P5A100E21**16	40,500	11.3	13.7
4130163	24ABB342C30	CAP**4821A**	OVLAAB048112	41,000	10.7	13.2
3043049	24ABB342C30	CAP**4821A**+TDR		41,500	10.7	13.0
3689561	24ABB342C30	CAP**4823A**	58HDV080−−20	41,000	11.0	13.5
4733936	24ABB342C30	CAP**4823A**	59*N*A100V21**20	40,500	11.4	13.7
4733937	24ABB342C30	CAP**4823A**	59*N*A120V24**22	40,500	11.5	14.0
4733890	24ABB342C30	CAP**4823A**	59*P5A100E21**16	40,500	11.3	13.7
4733891	24ABB342C30	CAP**4823A**	59*P5A120E24**22	41,000	11.5	14.0
3689560	24ABB342C30	CAP**4823A**+TDR		41,000	10.8	13.0
3043059	24ABB342C30	CAP**4824A**	58CV(A,X)135−22	41,000	11.7	14.0
3043060	24ABB342C30	CAP**4824A**	58CV(A,X)155−22	41,000	11.7	14.0
3099034	24ABB342C30	CAP**4824A**	58ME(B,C)120−20	40,500	11.5	14.0
3043058	24ABB342C30	CAP**4824A**	58MV(B,C)120−20	41,000	11.5	13.5
3043061	24ABB342C30	CAP**4824A**	58PH*135−20	41,500	11.5	14.0
3673021	24ABB342C30	CAP**4824A**	58UVB120−20	41,000	11.5	13.5
4733934	24ABB342C30	CAP**4824A**	59*N*A100V21**20	40,500	11.4	13.7
4733935	24ABB342C30	CAP**4824A**	59*N*A120V24**22	40,500	11.5	14.0
4733888	24ABB342C30	CAP**4824A**	59*P5A100E21**16	41,000	11.3	13.7
4733889	24ABB342C30	CAP**4824A**	59*P5A120E24**22	41,500	11.5	14.0
3043056	24ABB342C30	CAP**4824A**+TDR		41,500	10.7	13.0
3689601	24ABB342C30	CAP**6025A**	58HDV100−−20	42,000	11.5	14.0
3689600	24ABB342C30	CAP**6025A**+TDR		42,000	11.0	13.0
3043089	24ABB342C30	CNPH*4221A**	58CV(A,X)070−12	40,000	11.0	13.2
3043090	24ABB342C30	CNPH*4221A**	58CV(A,X)090−16	40,500	11.2	13.5
3043091	24ABB342C30	CNPH*4221A**	58CV(A,X)110−20	40,000	11.2	13.5
3043092	24ABB342C30	CNPH*4221A**	58CV(A,X)135−22	40,500	11.2	13.5
3043093	24ABB342C30	CNPH*4221A**	58CV(A,X)155−22	40,500	11.2	13.5
4130204	24ABB342C30	CNPH*4221A**	58HDV080−−20	40,500	10.7	13.2

See notes on page 36

COMBINATION RATINGS

AHRI Ref. No.	Model Number	Indoor Model	Furnace Model	Capacity	EER	SEER
4130205	24ABB342C30	CNPH*4221A**	58HDV100−−20	40,500	11.0	13.5
3612967	24ABB342C30	CNPH*4221A**	58ME(B,C)040−12	40,500	11.0	13.5
3099047	24ABB342C30	CNPH*4221A**	58ME(B,C)060−12	40,500	11.0	13.5
3099048	24ABB342C30	CNPH*4221A**	58ME(B,C)080−12	40,500	11.0	13.5
3099049	24ABB342C30	CNPH*4221A**	58ME(B,C)080−16	40,500	11.0	13.5
3099050	24ABB342C30	CNPH*4221A**	58ME(B,C)100−20	40,500	11.0	13.5
3099051	24ABB342C30	CNPH*4221A**	58ME(B,C)120−20	40,500	11.0	13.5
3099046	24ABB342C30	CNPH*4221A**	58MEB040−12	40,500	11.0	13.5
3043084	24ABB342C30	CNPH*4221A**	58MV(B,C)060−14	40,500	11.2	13.5
3043085	24ABB342C30	CNPH*4221A**	58MV(B,C)080−14	40,000	11.0	13.2
3043086	24ABB342C30	CNPH*4221A**	58MV(B,C)080−20	40,500	11.0	13.2
3043087	24ABB342C30	CNPH*4221A**	58MV(B,C)100−20	40,000	11.0	13.2
3043088	24ABB342C30	CNPH*4221A**	58MV(B,C)120−20	40,500	11.2	13.5
3043094	24ABB342C30	CNPH*4221A**	58PH*070−16	40,500	10.7	13.0
3043095	24ABB342C30	CNPH*4221A**	58PH*090−16	40,500	11.2	13.5
3043096	24ABB342C30	CNPH*4221A**	58PH*110−20	40,500	11.2	13.5
3043097	24ABB342C30	CNPH*4221A**	58PH*135−20	40,500	11.2	13.5
4130172	24ABB342C30	CNPH*4221A**	58VLR120−20	40,000	11.0	13.5
4130171	24ABB342C30	CNPH*4221A**	58VMR120−20	40,000	11.0	13.5
4733950	24ABB342C30	CNPH*4221A**	59*N*A060V17**14	39,500	10.9	13.0
4733951	24ABB342C30	CNPH*4221A**	59*N*A080V17**14	39,500	11.0	13.3
4733952	24ABB342C30	CNPH*4221A**	59*N*A100V21**20	40,000	11.1	13.5
4733953	24ABB342C30	CNPH*4221A**	59*N*A120V24**22	40,000	11.3	13.7
4733904	24ABB342C30	CNPH*4221A**	59*P5A060E17**14	40,000	10.9	13.0
4733905	24ABB342C30	CNPH*4221A**	59*P5A080E17**16	40,000	10.9	13.3
4733906	24ABB342C30	CNPH*4221A**	59*P5A100E21**16	40,000	11.1	13.5
4733907	24ABB342C30	CNPH*4221A**	59*P5A120E24**22	40,500	11.3	13.7
4130174	24ABB342C30	CNPH*4221A**	OVLAAB048112	40,500	10.7	13.0
4130175	24ABB342C30	CNPH*4221A**	OVLAAB060154	41,000	11.0	13.5
4130173	24ABB342C30	CNPH*4221A**	OVMAAB042112	40,000	10.7	13.2
3043082	24ABB342C30	CNPH*4221A**+TDR		40,500	10.5	13.0
3689577	24ABB342C30	CNPH*4321A**	58CV(A,X)070−12	41,500	11.5	14.0
3689578	24ABB342C30	CNPH*4321A**	58CV(A,X)090−16	41,500	11.5	14.0
3689579	24ABB342C30	CNPH*4321A**	58CV(A,X)110−20	41,500	11.5	14.0
3689580	24ABB342C30	CNPH*4321A**	58CV(A,X)135−22	41,500	11.0	14.5
3689581	24ABB342C30	CNPH*4321A**	58CV(A,X)155−22	41,500	12.0	14.5
3689592	24ABB342C30	CNPH*4321A**	58HDV060−−12	41,500	11.0	13.5
3689593	24ABB342C30	CNPH*4321A**	58HDV080−−20	41,500	11.5	14.0
3689587	24ABB342C30	CNPH*4321A**	58ME(B,C)060−12	41,500	11.5	14.0
3689588	24ABB342C30	CNPH*4321A**	58ME(B,C)080−12	41,500	11.5	14.0
3689589	24ABB342C30	CNPH*4321A**	58ME(B,C)080−16	41,500	11.5	14.0
3689590	24ABB342C30	CNPH*4321A**	58ME(B,C)100−20	41,500	11.5	14.0
3689591	24ABB342C30	CNPH*4321A**	58ME(B,C)120−20	41,500	11.5	14.0
3689586	24ABB342C30	CNPH*4321A**	58MEB040−12	41,500	11.5	14.0
3689572	24ABB342C30	CNPH*4321A**	58MV(B,C)060−14	41,500	11.5	14.0
3689573	24ABB342C30	CNPH*4321A**	58MV(B,C)080−14	41,500	11.5	14.0
3689574	24ABB342C30	CNPH*4321A**	58MV(B,C)080−20	41,500	11.5	14.0
3689575	24ABB342C30	CNPH*4321A**	58MV(B,C)100−20	41,500	11.5	14.0
3689576	24ABB342C30	CNPH*4321A**	58MV(B,C)120−20	41,500	11.5	14.0
3689571	24ABB342C30	CNPH*4321A**	58MVB040−14	41,500	11.5	14.0
3689582	24ABB342C30	CNPH*4321A**	58PH*070−16	41,500	11.0	13.5
3689583	24ABB342C30	CNPH*4321A**	58PH*090−16	41,500	11.5	14.0
3689584	24ABB342C30	CNPH*4321A**	58PH*110−20	41,500	11.5	14.0
3689585	24ABB342C30	CNPH*4321A**	58PH*135−20	41,500	11.5	14.0
4130177	24ABB342C30	CNPH*4321A**	58VLR120−20	41,500	11.5	14.0
4130176	24ABB342C30	CNPH*4321A**	58VMR120−20	41,500	11.5	14.0
4733954	24ABB342C30	CNPH*4321A**	59*N*A060V17**14	41,000	11.3	13.7
4733955	24ABB342C30	CNPH*4321A**	59*N*A080V17**14	41,000	11.4	14.0
4733956	24ABB342C30	CNPH*4321A**	59*N*A100V21**20	41,000	11.6	14.2
4733957	24ABB342C30	CNPH*4321A**	59*N*A120V24**22	41,000	11.7	14.2
4733908	24ABB342C30	CNPH*4321A**	59*P5A060E17**14	41,500	11.3	13.7
4733909	24ABB342C30	CNPH*4321A**	59*P5A080E17**16	41,500	11.4	13.7
4733910	24ABB342C30	CNPH*4321A**	59*P5A100E21**16	41,500	11.5	14.0
4733911	24ABB342C30	CNPH*4321A**	59*P5A120E24**22	42,000	11.7	14.2
4130179	24ABB342C30	CNPH*4321A**	OVLAAB048112	41,500	11.0	13.5
4130180	24ABB342C30	CNPH*4321A**	OVLAAB060154	41,500	11.5	14.0
4130178	24ABB342C30	CNPH*4321A**	OVMAAB042112	41,500	11.0	13.5
3689570	24ABB342C30	CNPH*4321A**+TDR		41,500	11.0	13.0
3043105	24ABB342C30	CNPH*4821A**	58CV(A,X)070−12	41,000	11.2	13.5
3043106	24ABB342C30	CNPH*4821A**	58CV(A,X)090−16	41,000	11.5	14.0
3043107	24ABB342C30	CNPH*4821A**	58CV(A,X)110−20	41,000	11.5	13.5
3043108	24ABB342C30	CNPH*4821A**	58CV(A,X)135−22	41,000	11.7	14.0
3043109	24ABB342C30	CNPH*4821A**	58CV(A,X)155−22	41,000	11.7	14.0

See notes on page 36

COMBINATION RATINGS

AHRI Ref. No.	Model Number	Indoor Model	Furnace Model	Capacity	EER	SEER
4130206	24ABB342C30	CNPH*4821A**	58HDV060−−12	41,000	10.7	13.2
4130207	24ABB342C30	CNPH*4821A**	58HDV080−−20	41,500	11.0	13.5
4130208	24ABB342C30	CNPH*4821A**	58HDV100−−20	41,000	11.0	13.5
3612968	24ABB342C30	CNPH*4821A**	58ME(B,C)040−12	40,500	11.5	14.0
3099053	24ABB342C30	CNPH*4821A**	58ME(B,C)060−12	40,500	11.0	13.5
3099054	24ABB342C30	CNPH*4821A**	58ME(B,C)080−12	40,500	11.5	14.0
3099055	24ABB342C30	CNPH*4821A**	58ME(B,C)080−16	40,500	11.5	14.0
3099056	24ABB342C30	CNPH*4821A**	58ME(B,C)100−20	40,500	11.5	14.0
3099057	24ABB342C30	CNPH*4821A**	58ME(B,C)120−20	40,500	11.5	14.0
3099052	24ABB342C30	CNPH*4821A**	58MEB040−12	40,500	11.5	14.0
3043100	24ABB342C30	CNPH*4821A**	58MV(B,C)060−14	41,500	11.5	13.5
3043101	24ABB342C30	CNPH*4821A**	58MV(B,C)080−14	41,000	11.2	13.5
3043102	24ABB342C30	CNPH*4821A**	58MV(B,C)080−20	41,000	11.2	13.5
3043103	24ABB342C30	CNPH*4821A**	58MV(B,C)100−20	40,500	11.2	13.5
3043104	24ABB342C30	CNPH*4821A**	58MV(B,C)120−20	41,000	11.5	14.0
3043110	24ABB342C30	CNPH*4821A**	58PH*070−16	41,000	11.0	13.2
3043111	24ABB342C30	CNPH*4821A**	58PH*090−16	41,000	11.5	14.0
3043112	24ABB342C30	CNPH*4821A**	58PH*110−20	41,500	11.5	14.0
3043113	24ABB342C30	CNPH*4821A**	58PH*135−20	41,500	11.5	14.0
4130182	24ABB342C30	CNPH*4821A**	58VLR120−20	41,000	11.5	14.0
4130181	24ABB342C30	CNPH*4821A**	58VMR120−20	41,000	11.0	13.5
4733958	24ABB342C30	CNPH*4821A**	59*N*A060V17**14	40,500	11.2	13.5
4733959	24ABB342C30	CNPH*4821A**	59*N*A080V17**14	40,500	11.3	13.7
4733960	24ABB342C30	CNPH*4821A**	59*N*A100V21**20	40,500	11.4	14.0
4733961	24ABB342C30	CNPH*4821A**	59*N*A120V24**22	40,500	11.5	14.0
4733912	24ABB342C30	CNPH*4821A**	59*P5A060E17**14	41,000	11.2	13.5
4733913	24ABB342C30	CNPH*4821A**	59*P5A080E17**16	41,000	11.2	13.7
4733914	24ABB342C30	CNPH*4821A**	59*P5A100E21**16	41,000	11.4	13.7
4733915	24ABB342C30	CNPH*4821A**	59*P5A120E24**22	41,500	11.6	14.2
4130184	24ABB342C30	CNPH*4821A**	OVLAAB048112	41,000	11.0	13.5
4130185	24ABB342C30	CNPH*4821A**	OVLAAB060154	41,500	11.0	14.0
4130183	24ABB342C30	CNPH*4821A**	OVMAAB042112	41,000	11.0	13.5
3043098	24ABB342C30	CNPH*4821A**+TDR		41,500	10.7	13.0
3099037	24ABB342C30	CNPV*4217A**	58CV(A,X)090−16	40,500	11.0	14.0
4130196	24ABB342C30	CNPV*4217A**	58HDV060−−12	40,500	10.7	13.0
3612966	24ABB342C30	CNPV*4217A**	58ME(B,C)040−12	40,500	11.0	13.5
3099040	24ABB342C30	CNPV*4217A**	58ME(B,C)060−12	40,500	11.0	13.5
3099041	24ABB342C30	CNPV*4217A**	58ME(B,C)080−12	40,500	11.0	13.5
3099042	24ABB342C30	CNPV*4217A**	58ME(B,C)080−16	40,500	11.0	13.5
3099039	24ABB342C30	CNPV*4217A**	58MEB040−12	40,500	11.0	13.5
3099036	24ABB342C30	CNPV*4217A**	58MV(B,C)060−14	40,500	11.0	13.5
3099038	24ABB342C30	CNPV*4217A**	58PH*070−16	40,500	10.7	13.0
3756824	24ABB342C30	CNPV*4217A**	58UVB060−14	40,500	11.0	13.5
4733938	24ABB342C30	CNPV*4217A**	59*N*A060V17**14	40,000	10.9	13.3
4733939	24ABB342C30	CNPV*4217A**	59*N*A080V17**14	40,000	11.1	13.5
4733892	24ABB342C30	CNPV*4217A**	59*P5A060E17**14	40,500	11.0	13.3
4733893	24ABB342C30	CNPV*4217A**	59*P5A080E17**16	40,500	11.0	13.3
4130164	24ABB342C30	CNPV*4217A**	OVMAAB042112	40,500	10.7	13.2
3099035	24ABB342C30	CNPV*4217A**+TDR		40,500	10.5	13.0
3043066	24ABB342C30	CNPV*4221A**	58CV(A,X)110−20	40,000	11.2	13.5
4130197	24ABB342C30	CNPV*4221A**	58HDV080−−20	40,500	10.7	13.2
3099043	24ABB342C30	CNPV*4221A**	58ME(B,C)100−20	40,500	11.0	13.5
3043063	24ABB342C30	CNPV*4221A**	58MV(B,C)080−14	40,000	11.0	13.2
3043064	24ABB342C30	CNPV*4221A**	58MV(B,C)080−20	40,500	11.0	13.2
3043065	24ABB342C30	CNPV*4221A**	58MV(B,C)100−20	40,000	11.0	13.2
3043067	24ABB342C30	CNPV*4221A**	58PH*090−16	40,500	11.2	13.5
3043068	24ABB342C30	CNPV*4221A**	58PH*110−20	40,500	11.2	13.5
3756749	24ABB342C30	CNPV*4221A**	58UVB080−14	40,000	11.0	13.2
3756750	24ABB342C30	CNPV*4221A**	58UVB080−20	40,500	11.0	13.2
3756751	24ABB342C30	CNPV*4221A**	58UVB100−20	40,000	11.0	13.2
4130166	24ABB342C30	CNPV*4221A**	58VLR120−20	40,000	11.0	13.5
4130165	24ABB342C30	CNPV*4221A**	58VMR120−20	40,000	11.0	13.5
4733940	24ABB342C30	CNPV*4221A**	59*N*A060V17**14	39,500	10.9	13.0
4733941	24ABB342C30	CNPV*4221A**	59*N*A080V17**14	39,500	11.0	13.3
4733942	24ABB342C30	CNPV*4221A**	59*N*A100V21**20	40,000	11.1	13.5
4733894	24ABB342C30	CNPV*4221A**	59*P5A060E17**14	40,000	10.9	13.0
4733895	24ABB342C30	CNPV*4221A**	59*P5A080E17**16	40,000	10.9	13.3
4733896	24ABB342C30	CNPV*4221A**	59*P5A100E21**16	40,000	11.1	13.5
4130167	24ABB342C30	CNPV*4221A**	OVLAAB048112	40,500	10.7	13.0
3043062	24ABB342C30	CNPV*4221A**+TDR		40,500	10.5	13.0
3689565	24ABB342C30	CNPV*4324A**	58CV(A,X)135−22	41,500	12.0	14.5
3689566	24ABB342C30	CNPV*4324A**	58CV(A,X)155−22	41,500	12.0	14.5
4130198	24ABB342C30	CNPV*4324A**	58HDV080−−20	41,500	11.5	14.0

See notes on page 36

COMBINATION RATINGS

AHRI Ref. No.	Model Number	Indoor Model	Furnace Model	Capacity	EER	SEER
4130199	24ABB342C30	CNPV*4324A**	58HDV100−−20	41,500	11.5	14.0
3689569	24ABB342C30	CNPV*4324A**	58HDV100−−20 (DWNFLW ONLY)	41,500	11.5	14.0
3689568	24ABB342C30	CNPV*4324A**	58ME(B,C)120−20	41,500	12.0	14.5
3689564	24ABB342C30	CNPV*4324A**	58MV(B,C)120−20	41,500	11.5	14.0
3689563	24ABB342C30	CNPV*4324A**	58MVB040−14	41,500	11.5	14.0
3689567	24ABB342C30	CNPV*4324A**	58PH*135−20	41,500	11.5	14.0
3689750	24ABB342C30	CNPV*4324A**	58UVB120−20	41,500	11.5	14.0
4733943	24ABB342C30	CNPV*4324A**	59*N*A100V21**20	41,000	11.6	14.2
4733944	24ABB342C30	CNPV*4324A**	59*N*A120V24**22	41,000	11.8	14.2
4733897	24ABB342C30	CNPV*4324A**	59*P5A100E21**16	41,500	11.6	14.2
4733898	24ABB342C30	CNPV*4324A**	59*P5A120E24**22	42,000	11.8	14.5
3689562	24ABB342C30	CNPV*4324A**+TDR		41,500	11.0	13.0
3043073	24ABB342C30	CNPV*4821A**	58CV(A,X)110−20	41,000	11.5	13.5
4130200	24ABB342C30	CNPV*4821A**	58HDV060−−12	41,000	11.0	13.2
4130201	24ABB342C30	CNPV*4821A**	58HDV080−−20	41,500	11.0	13.5
3099044	24ABB342C30	CNPV*4821A**	58ME(B,C)100−20	40,500	11.0	14.0
3043070	24ABB342C30	CNPV*4821A**	58MV(B,C)080−14	41,000	11.2	13.5
3043071	24ABB342C30	CNPV*4821A**	58MV(B,C)080−20	41,000	11.2	13.5
3043072	24ABB342C30	CNPV*4821A**	58MV(B,C)100−20	40,500	11.2	13.5
3043074	24ABB342C30	CNPV*4821A**	58PH*090−16	41,000	11.5	14.0
3043075	24ABB342C30	CNPV*4821A**	58PH*110−20	41,500	11.5	14.0
3756752	24ABB342C30	CNPV*4821A**	58UVB080−14	41,000	11.2	13.5
3756753	24ABB342C30	CNPV*4821A**	58UVB080−20	41,000	11.2	13.5
3756754	24ABB342C30	CNPV*4821A**	58UVB100−20	40,500	11.2	13.5
4130169	24ABB342C30	CNPV*4821A**	58VLR120−20	41,000	11.5	14.0
4130168	24ABB342C30	CNPV*4821A**	58VMR120−20	41,000	11.0	13.5
4733945	24ABB342C30	CNPV*4821A**	59*N*A060V17**14	40,500	11.2	13.5
4733946	24ABB342C30	CNPV*4821A**	59*N*A080V17**14	40,500	11.3	13.7
4733947	24ABB342C30	CNPV*4821A**	59*N*A100V21**20	40,500	11.4	14.0
4733899	24ABB342C30	CNPV*4821A**	59*P5A060E17**14	41,000	11.2	13.5
4733900	24ABB342C30	CNPV*4821A**	59*P5A080E17**16	41,000	11.2	13.7
4733901	24ABB342C30	CNPV*4821A**	59*P5A100E21**16	41,000	11.4	13.7
4130170	24ABB342C30	CNPV*4821A**	OVLAAB048112	41,000	11.0	13.5
3043069	24ABB342C30	CNPV*4821A**+TDR		41,500	10.7	13.0
3043079	24ABB342C30	CNPV*4824A**	58CV(A,X)135−22	41,000	11.7	14.0
3043080	24ABB342C30	CNPV*4824A**	58CV(A,X)155−22	41,000	11.7	14.0
4130202	24ABB342C30	CNPV*4824A**	58HDV080−−20	41,500	11.0	13.5
4130203	24ABB342C30	CNPV*4824A**	58HDV100−−20	41,000	11.0	13.5
3099045	24ABB342C30	CNPV*4824A**	58ME(B,C)120−20	40,500	11.0	14.0
3043078	24ABB342C30	CNPV*4824A**	58MV(B,C)120−20	41,000	11.5	13.5
3043081	24ABB342C30	CNPV*4824A**	58PH*135−20	41,500	11.5	14.0
3756755	24ABB342C30	CNPV*4824A**	58UVB120−20	41,000	11.5	13.5
4733948	24ABB342C30	CNPV*4824A**	59*N*A100V21**20	40,500	11.4	14.0
4733949	24ABB342C30	CNPV*4824A**	59*N*A120V24**22	40,500	11.5	14.0
4733902	24ABB342C30	CNPV*4824A**	59*P5A100E21**16	41,000	11.4	13.7
4733903	24ABB342C30	CNPV*4824A**	59*P5A120E24**22	41,500	11.6	14.2
3043076	24ABB342C30	CNPV*4824A**+TDR		41,500	10.7	13.0
3043122	24ABB342C30	CSPH*4212A**	58CV(A,X)070−12	40,500	11.2	13.5
3043123	24ABB342C30	CSPH*4212A**	58CV(A,X)090−16	40,500	11.5	13.5
3043124	24ABB342C30	CSPH*4212A**	58CV(A,X)110−20	40,500	11.2	13.5
3043125	24ABB342C30	CSPH*4212A**	58CV(A,X)135−22	40,500	11.7	14.0
3043126	24ABB342C30	CSPH*4212A**	58CV(A,X)155−22	40,500	11.7	14.0
3689594	24ABB342C30	CSPH*4212A**	58HDV060−−12	41,500	11.0	13.5
3689595	24ABB342C30	CSPH*4212A**	58HDV080−−20	41,500	11.0	13.5
3689596	24ABB342C30	CSPH*4212A**	58HDV100−−20	41,500	11.5	14.0
3612969	24ABB342C30	CSPH*4212A**	58ME(B,C)040−12	40,500	11.5	14.0
3099059	24ABB342C30	CSPH*4212A**	58ME(B,C)060−12	40,500	11.0	14.0
3099060	24ABB342C30	CSPH*4212A**	58ME(B,C)080−12	40,500	11.0	14.0
3099061	24ABB342C30	CSPH*4212A**	58ME(B,C)080−16	40,500	11.0	14.0
3099062	24ABB342C30	CSPH*4212A**	58ME(B,C)100−20	40,500	11.0	14.0
3099063	24ABB342C30	CSPH*4212A**	58ME(B,C)120−20	40,500	11.0	14.0
3099058	24ABB342C30	CSPH*4212A**	58MEB040−12	40,500	11.5	14.0
3043117	24ABB342C30	CSPH*4212A**	58MV(B,C)060−14	40,500	11.2	13.5
3043118	24ABB342C30	CSPH*4212A**	58MV(B,C)080−14	40,000	11.0	13.2
3043119	24ABB342C30	CSPH*4212A**	58MV(B,C)080−20	40,500	11.0	13.5
3043120	24ABB342C30	CSPH*4212A**	58MV(B,C)100−20	40,000	11.2	13.5
3043121	24ABB342C30	CSPH*4212A**	58MV(B,C)120−20	40,500	11.5	13.5
3043127	24ABB342C30	CSPH*4212A**	58PH*070−16	40,500	10.7	13.0
3043128	24ABB342C30	CSPH*4212A**	58PH*090−16	40,500	11.2	13.5
3043129	24ABB342C30	CSPH*4212A**	58PH*110−20	40,500	11.2	13.5
3043130	24ABB342C30	CSPH*4212A**	58PH*135−20	40,500	11.2	13.5
4130187	24ABB342C30	CSPH*4212A**	58VLR120−20	41,000	11.5	14.0
4130186	24ABB342C30	CSPH*4212A**	58VMR120−20	41,000	11.0	13.5

See notes on page 36

COMBINATION RATINGS

AHRI Ref. No.	Model Number	Indoor Model	Furnace Model	Capacity	EER	SEER
4733962	24ABB342C30	CSPH*4212A**	59*N*A060V17**14	40,500	11.1	13.5
4733963	24ABB342C30	CSPH*4212A**	59*N*A080V17**14	40,500	11.3	13.7
4733964	24ABB342C30	CSPH*4212A**	59*N*A100V21**20	41,000	11.4	13.7
4733965	24ABB342C30	CSPH*4212A**	59*N*A120V24**22	41,000	11.5	14.0
4733916	24ABB342C30	CSPH*4212A**	59*P5A060E17**14	41,000	11.2	13.5
4733917	24ABB342C30	CSPH*4212A**	59*P5A080E17**16	41,000	11.2	13.7
4733918	24ABB342C30	CSPH*4212A**	59*P5A100E21**16	41,000	11.4	13.7
4733919	24ABB342C30	CSPH*4212A**	59*P5A120E24**22	41,500	11.5	14.0
4130189	24ABB342C30	CSPH*4212A**	OVLAAB048112	41,500	10.7	13.2
4130190	24ABB342C30	CSPH*4212A**	OVLAAB060154	41,500	11.0	13.5
4130188	24ABB342C30	CSPH*4212A**	OVMAAB042112	41,000	11.0	13.5
3043115	24ABB342C30	CSPH*4212A**+TDR		40,500	10.5	13.0
3043138	24ABB342C30	CSPH*4812A**	58CV(A,X)070−12	41,000	11.2	13.5
3043139	24ABB342C30	CSPH*4812A**	58CV(A,X)090−16	41,000	11.5	14.0
3043140	24ABB342C30	CSPH*4812A**	58CV(A,X)110−20	41,000	11.5	13.5
3043141	24ABB342C30	CSPH*4812A**	58CV(A,X)135−22	41,000	11.7	14.0
3043142	24ABB342C30	CSPH*4812A**	58CV(A,X)155−22	41,000	11.7	14.0
3689597	24ABB342C30	CSPH*4812A**	58HDV060−−12	42,000	11.0	13.5
3689598	24ABB342C30	CSPH*4812A**	58HDV080−−20	42,000	11.5	14.0
3689599	24ABB342C30	CSPH*4812A**	58HDV100−−20	42,000	11.5	14.0
3612970	24ABB342C30	CSPH*4812A**	58ME(B,C)040−12	40,500	11.0	14.0
3099065	24ABB342C30	CSPH*4812A**	58ME(B,C)060−12	40,500	11.0	14.0
3099066	24ABB342C30	CSPH*4812A**	58ME(B,C)080−12	40,500	11.0	14.0
3099067	24ABB342C30	CSPH*4812A**	58ME(B,C)080−16	40,500	11.0	14.0
3099068	24ABB342C30	CSPH*4812A**	58ME(B,C)100−20	40,500	11.0	14.0
3099069	24ABB342C30	CSPH*4812A**	58ME(B,C)120−20	40,500	11.0	14.0
3099064	24ABB342C30	CSPH*4812A**	58MEB040−12	40,500	11.0	14.0
3043133	24ABB342C30	CSPH*4812A**	58MV(B,C)060−14	41,000	11.5	13.5
3043134	24ABB342C30	CSPH*4812A**	58MV(B,C)080−14	41,000	11.2	13.5
3043135	24ABB342C30	CSPH*4812A**	58MV(B,C)080−20	41,000	11.2	13.5
3043136	24ABB342C30	CSPH*4812A**	58MV(B,C)100−20	40,500	11.2	13.5
3043137	24ABB342C30	CSPH*4812A**	58MV(B,C)120−20	41,000	11.5	14.0
3043143	24ABB342C30	CSPH*4812A**	58PH*070−16	41,000	11.0	13.2
3043144	24ABB342C30	CSPH*4812A**	58PH*090−16	41,000	11.5	14.0
3043145	24ABB342C30	CSPH*4812A**	58PH*110−20	41,500	11.5	14.0
3043146	24ABB342C30	CSPH*4812A**	58PH*135−20	41,500	11.5	14.0
4130192	24ABB342C30	CSPH*4812A**	58VLR120−20	41,000	11.0	14.0
4130191	24ABB342C30	CSPH*4812A**	58VMR120−20	41,000	11.0	14.0
4733966	24ABB342C30	CSPH*4812A**	59*N*A060V17**14	40,500	11.2	13.5
4733967	24ABB342C30	CSPH*4812A**	59*N*A080V17**14	41,000	11.3	13.7
4733968	24ABB342C30	CSPH*4812A**	59*N*A100V21**20	41,000	11.5	14.0
4733969	24ABB342C30	CSPH*4812A**	59*N*A120V24**22	41,000	11.6	14.2
4733920	24ABB342C30	CSPH*4812A**	59*P5A060E17**14	41,000	11.2	13.7
4733921	24ABB342C30	CSPH*4812A**	59*P5A080E17**16	41,000	11.3	13.7
4733922	24ABB342C30	CSPH*4812A**	59*P5A100E21**16	41,000	11.4	13.7
4733923	24ABB342C30	CSPH*4812A**	59*P5A120E24**22	41,500	11.6	14.2
4130194	24ABB342C30	CSPH*4812A**	OVLAAB048112	41,500	11.0	13.5
4130195	24ABB342C30	CSPH*4812A**	OVLAAB060154	41,500	11.0	14.0
4130193	24ABB342C30	CSPH*4812A**	OVMAAB042112	41,000	11.0	13.5
3043131	24ABB342C30	CSPH*4812A**+TDR		41,500	10.7	13.0
3863552	24ABB342C30	FB4CNF042		40,000	11.0	13.0
4208552	24ABB342C30	FB4CNF042+TXV		40,000	11.0	13.5
3863553	24ABB342C30	FB4CNF048		40,000	11.0	13.0
4208553	24ABB342C30	FB4CNF048+TXV		40,000	11.0	13.5
3043151	24ABB342C30	FE4AN(B,F)003+UI		40,500	11.2	13.5
3043152	24ABB342C30	FE4AN(B,F)005+UI		42,000	12.0	14.5
3043153	24ABB342C30	FE4ANB006+UI		42,000	12.2	14.5
3043154	24ABB342C30	FE5ANB004+UI		42,000	12.2	14.5
3404507	24ABB342C30	FV4CN(B,F)003		40,500	11.2	13.5
3404508	24ABB342C30	FV4CN(B,F)005		42,000	12.0	14.5
3404509	24ABB342C30	FV4CNB006		42,000	12.2	14.5
3752046	24ABB342C30	FX4DN(B,F)043		41,000	11.5	14.0
3752047	24ABB342C30	FX4DN(B,F)049		41,500	11.5	14.0
3752048	24ABB342C30	FX4DN(B,F)061		42,000	12.0	14.5
3863554	24ABB342C30	FY5BNF042		40,000	11.0	13.0
4208554	24ABB342C30	FY5BNF042+TXV		40,000	11.0	13.0
3863555	24ABB342C30	FY5BNF048		40,000	11.0	13.0
4208555	24ABB342C30	FY5BNF048+TXV		40,000	11.0	13.5
3043155	24ABB348C30	†CAP**4821A**+TDR		46,500	10.7	13.0
3043157	24ABB348C30	CAP**4817A**	58CV(A,X)090−16	45,000	11.2	13.2
3099070	24ABB348C30	CAP**4817A**	58ME(B,C)080−16	46,500	11.0	13.0
3043156	24ABB348C30	CAP**4817A**+TDR		45,000	10.7	13.0

See notes on page 36

COMBINATION RATINGS

AHRI Ref. No.	Model Number	Indoor Model	Furnace Model	Capacity	EER	SEER
3043160	24ABB348C30	CAP**4821A**	58CV(A,X)110−20	46,000	11.2	13.5
3099071	24ABB348C30	CAP**4821A**	58ME(B,C)100−20	46,500	11.0	13.5
3043158	24ABB348C30	CAP**4821A**	58MV(B,C)080−20	45,500	11.2	13.2
3043159	24ABB348C30	CAP**4821A**	58MV(B,C)100−20	46,000	11.2	13.2
3043161	24ABB348C30	CAP**4821A**	58PH*090−16	46,000	11.2	13.5
3043162	24ABB348C30	CAP**4821A**	58PH*110−20	46,000	11.5	13.5
3673046	24ABB348C30	CAP**4821A**	58UVB080−20	45,500	11.2	13.2
3673047	24ABB348C30	CAP**4821A**	58UVB100−20	46,000	11.2	13.2
4130210	24ABB348C30	CAP**4821A**	58VLR120−20	45,500	11.0	13.5
4130209	24ABB348C30	CAP**4821A**	58VMR120−20	45,500	11.0	13.2
4734001	24ABB348C30	CAP**4821A**	59*N*A100V21**20	45,000	11.0	13.3
4733970	24ABB348C30	CAP**4821A**	59*P5A100E21**16	45,500	11.0	13.3
3689529	24ABB348C30	CAP**4823A**	58HDV080−−20	46,500	11.0	13.5
4734007	24ABB348C30	CAP**4823A**	59*N*A100V21**20	45,000	11.0	13.3
4734008	24ABB348C30	CAP**4823A**	59*N*A120V24**22	45,000	11.4	13.7
4733976	24ABB348C30	CAP**4823A**	59*P5A100E21**16	45,500	11.0	13.3
4733977	24ABB348C30	CAP**4823A**	59*P5A120E24**22	45,500	11.2	13.5
3689528	24ABB348C30	CAP**4823A**+TDR		46,500	11.0	13.0
3043165	24ABB348C30	CAP**4824A**	58CV(A,X)135−22	46,000	11.5	13.5
3043166	24ABB348C30	CAP**4824A**	58CV(A,X)155−22	46,000	11.5	13.5
3099072	24ABB348C30	CAP**4824A**	58ME(B,C)120−20	46,500	11.5	14.0
3043164	24ABB348C30	CAP**4824A**	58MV(B,C)120−20	46,000	11.2	13.5
3043167	24ABB348C30	CAP**4824A**	58PH*135−20	46,000	11.5	13.5
3673048	24ABB348C30	CAP**4824A**	58UVB120−20	46,000	11.2	13.5
4734002	24ABB348C30	CAP**4824A**	59*N*A100V21**20	45,500	11.2	13.5
4734003	24ABB348C30	CAP**4824A**	59*N*A120V24**22	45,500	11.4	13.7
4733971	24ABB348C30	CAP**4824A**	59*P5A100E21**16	45,500	11.0	13.3
4733972	24ABB348C30	CAP**4824A**	59*P5A120E24**22	46,000	11.4	13.7
3043163	24ABB348C30	CAP**4824A**+TDR		46,500	10.7	13.0
3043171	24ABB348C30	CAP**6021A**	58CV(A,X)110−20	46,000	11.7	13.5
3099073	24ABB348C30	CAP**6021A**	58ME(B,C)100−20	46,500	11.5	14.0
3043169	24ABB348C30	CAP**6021A**	58MV(B,C)080−20	46,000	11.5	13.5
3043170	24ABB348C30	CAP**6021A**	58MV(B,C)100−20	46,000	11.5	13.5
3043172	24ABB348C30	CAP**6021A**	58PH*090−16	47,000	11.7	13.5
3043173	24ABB348C30	CAP**6021A**	58PH*110−20	47,000	11.7	14.0
3673049	24ABB348C30	CAP**6021A**	58UVB080−20	46,000	11.5	13.5
3673050	24ABB348C30	CAP**6021A**	58UVB100−20	46,000	11.5	13.5
4130212	24ABB348C30	CAP**6021A**	58VLR120−20	46,500	11.5	13.5
4130211	24ABB348C30	CAP**6021A**	58VMR120−20	46,500	11.0	13.5
4734004	24ABB348C30	CAP**6021A**	59*N*A100V21**20	46,500	11.4	13.7
4733973	24ABB348C30	CAP**6021A**	59*P5A100E21**16	46,500	11.2	13.5
3043168	24ABB348C30	CAP**6021A**+TDR		46,500	11.0	13.2
3043176	24ABB348C30	CAP**6024A**	58CV(A,X)135−22	47,000	11.7	14.0
3043177	24ABB348C30	CAP**6024A**	58CV(A,X)155−22	47,000	11.7	14.0
3099074	24ABB348C30	CAP**6024A**	58ME(B,C)120−20	46,500	11.5	14.0
3043175	24ABB348C30	CAP**6024A**	58MV(B,C)120−20	47,000	11.5	13.5
3043178	24ABB348C30	CAP**6024A**	58PH*135−20	47,000	11.7	13.5
3673051	24ABB348C30	CAP**6024A**	58UVB120−20	47,000	11.5	13.5
4734005	24ABB348C30	CAP**6024A**	59*N*A100V21**20	46,500	11.4	13.7
4734006	24ABB348C30	CAP**6024A**	59*N*A120V24**22	46,500	11.5	14.0
4733974	24ABB348C30	CAP**6024A**	59*P5A100E21**16	46,500	11.2	13.5
4733975	24ABB348C30	CAP**6024A**	59*P5A120E24**22	47,000	11.5	14.0
3043174	24ABB348C30	CAP**6024A**+TDR		47,500	11.0	13.2
3689531	24ABB348C30	CAP**6025A**	58HDV100−−20	47,500	11.0	13.5
4734009	24ABB348C30	CAP**6025A**	59*N*A100V21**20	46,500	11.4	13.7
4734010	24ABB348C30	CAP**6025A**	59*N*A120V24**22	46,500	11.5	14.0
4733978	24ABB348C30	CAP**6025A**	59*P5A100E21**16	46,500	11.2	13.5
4733979	24ABB348C30	CAP**6025A**	59*P5A120E24**22	47,000	11.5	14.0
3689530	24ABB348C30	CAP**6025A**+TDR		47,500	11.0	13.0
3043199	24ABB348C30	CNPH*4821A**	58CV(A,X)090−16	46,000	11.2	13.5
3043200	24ABB348C30	CNPH*4821A**	58CV(A,X)110−20	46,000	11.2	13.5
3043201	24ABB348C30	CNPH*4821A**	58CV(A,X)135−22	46,000	11.5	13.5
3043202	24ABB348C30	CNPH*4821A**	58CV(A,X)155−22	46,000	11.7	13.5
4130240	24ABB348C30	CNPH*4821A**	58HDV080−−20	46,000	11.0	13.2
4130241	24ABB348C30	CNPH*4821A**	58HDV100−−20	46,000	11.0	13.2
3099078	24ABB348C30	CNPH*4821A**	58ME(B,C)080−16	46,000	11.0	13.0
3099079	24ABB348C30	CNPH*4821A**	58ME(B,C)100−20	46,500	11.0	13.5
3099080	24ABB348C30	CNPH*4821A**	58ME(B,C)120−20	46,500	11.5	14.0
3043196	24ABB348C30	CNPH*4821A**	58MV(B,C)080−20	45,500	11.2	13.2
3043197	24ABB348C30	CNPH*4821A**	58MV(B,C)100−20	46,000	11.2	13.2
3043198	24ABB348C30	CNPH*4821A**	58MV(B,C)120−20	46,000	11.2	13.5
3043203	24ABB348C30	CNPH*4821A**	58PH*090−16	46,000	11.2	13.5
3043204	24ABB348C30	CNPH*4821A**	58PH*110−20	46,000	11.5	13.5

See notes on page 36

COMBINATION RATINGS

AHRI Ref. No.	Model Number	Indoor Model	Furnace Model	Capacity	EER	SEER
3043205	24ABB348C30	CNPH*4821A**	58PH*135−20	46,000	11.5	13.5
4130216	24ABB348C30	CNPH*4821A**	58VLR120−20	45,500	11.0	13.5
4130215	24ABB348C30	CNPH*4821A**	58VMR120−20	45,500	11.0	13.5
4734018	24ABB348C30	CNPH*4821A**	59*N*A100V21**20	45,500	11.2	13.5
4734019	24ABB348C30	CNPH*4821A**	59*N*A120V24**22	45,500	11.4	13.7
4733988	24ABB348C30	CNPH*4821A**	59*P5A080E17**16	45,500	11.0	13.0
4733989	24ABB348C30	CNPH*4821A**	59*P5A100E21**16	45,500	11.0	13.3
4733990	24ABB348C30	CNPH*4821A**	59*P5A120E24**22	46,000	11.4	13.7
4130217	24ABB348C30	CNPH*4821A**	OVLAAB060154	46,500	11.0	13.2
3043195	24ABB348C30	CNPH*4821A**+TDR		46,500	10.7	13.0
3043210	24ABB348C30	CNPH*6024A**	58CV(A,X)090−16	46,500	11.5	13.5
3043211	24ABB348C30	CNPH*6024A**	58CV(A,X)110−20	47,000	11.7	13.5
3043212	24ABB348C30	CNPH*6024A**	58CV(A,X)135−22	47,000	11.7	14.0
3043213	24ABB348C30	CNPH*6024A**	58CV(A,X)155−22	47,000	11.7	14.0
4130242	24ABB348C30	CNPH*6024A**	58HDV080−−20	47,000	11.0	13.5
4130243	24ABB348C30	CNPH*6024A**	58HDV100−−20	47,000	11.0	13.5
3099081	24ABB348C30	CNPH*6024A**	58ME(B,C)080−16	46,500	11.0	13.5
3099082	24ABB348C30	CNPH*6024A**	58ME(B,C)100−20	46,500	11.5	14.0
3099083	24ABB348C30	CNPH*6024A**	58ME(B,C)120−20	46,500	11.5	14.0
3043207	24ABB348C30	CNPH*6024A**	58MV(B,C)080−20	46,500	11.5	13.5
3043208	24ABB348C30	CNPH*6024A**	58MV(B,C)100−20	47,000	11.2	13.5
3043209	24ABB348C30	CNPH*6024A**	58MV(B,C)120−20	47,000	11.5	13.5
3043214	24ABB348C30	CNPH*6024A**	58PH*090−16	47,000	11.5	13.5
3043215	24ABB348C30	CNPH*6024A**	58PH*110−20	47,000	11.7	14.0
3043216	24ABB348C30	CNPH*6024A**	58PH*135−20	47,000	11.7	13.5
4130219	24ABB348C30	CNPH*6024A**	58VLR120−20	46,500	11.5	14.0
4130218	24ABB348C30	CNPH*6024A**	58VMR120−20	46,500	11.0	13.5
4734020	24ABB348C30	CNPH*6024A**	59*N*A100V21**20	46,000	11.4	13.7
4734021	24ABB348C30	CNPH*6024A**	59*N*A120V24**22	46,000	11.5	14.0
4733991	24ABB348C30	CNPH*6024A**	59*P5A080E17**16	46,500	11.0	13.3
4733992	24ABB348C30	CNPH*6024A**	59*P5A100E21**16	46,500	11.4	13.7
4733993	24ABB348C30	CNPH*6024A**	59*P5A120E24**22	47,000	11.5	14.0
4130220	24ABB348C30	CNPH*6024A**	OVLAAB048112	46,500	11.0	13.2
4130221	24ABB348C30	CNPH*6024A**	OVLAAB060154	47,000	11.0	13.5
3043206	24ABB348C30	CNPH*6024A**+TDR		47,500	11.0	13.2
3689543	24ABB348C30	CNPH*6124A**	58CV(A,X)090−16	47,500	11.5	14.0
3689544	24ABB348C30	CNPH*6124A**	58CV(A,X)110−20	47,500	11.5	14.0
3689545	24ABB348C30	CNPH*6124A**	58CV(A,X)135−22	47,500	11.5	14.0
3689546	24ABB348C30	CNPH*6124A**	58CV(A,X)155−22	47,500	12.0	14.5
3689554	24ABB348C30	CNPH*6124A**	58HDV080−−20	47,500	11.0	13.5
3689555	24ABB348C30	CNPH*6124A**	58HDV100−−20	47,500	11.0	13.5
3689551	24ABB348C30	CNPH*6124A**	58ME(B,C)080−16	47,500	11.0	13.5
3689552	24ABB348C30	CNPH*6124A**	58ME(B,C)100−20	47,500	11.5	14.0
3689553	24ABB348C30	CNPH*6124A**	58ME(B,C)120−20	47,500	11.5	14.0
3689540	24ABB348C30	CNPH*6124A**	58MV(B,C)080−20	47,000	11.0	13.5
3689541	24ABB348C30	CNPH*6124A**	58MV(B,C)100−20	47,500	11.0	13.5
3689542	24ABB348C30	CNPH*6124A**	58MV(B,C)120−20	47,500	11.5	14.0
3689547	24ABB348C30	CNPH*6124A**	58PH*070−16	47,500	11.0	13.0
3689548	24ABB348C30	CNPH*6124A**	58PH*090−16	47,500	11.5	14.0
3689549	24ABB348C30	CNPH*6124A**	58PH*110−20	47,500	11.5	14.0
3689550	24ABB348C30	CNPH*6124A**	58PH*135−20	47,500	11.5	14.0
4130223	24ABB348C30	CNPH*6124A**	58VLR120−20	47,000	11.5	13.5
4130222	24ABB348C30	CNPH*6124A**	58VMR120−20	46,500	11.0	13.5
4734022	24ABB348C30	CNPH*6124A**	59*N*A100V21**20	46,500	11.4	13.7
4734023	24ABB348C30	CNPH*6124A**	59*N*A120V24**22	46,500	11.5	14.0
4733994	24ABB348C30	CNPH*6124A**	59*P5A100E21**16	46,500	11.4	13.7
4733995	24ABB348C30	CNPH*6124A**	59*P5A120E24**22	47,000	11.5	14.0
4130224	24ABB348C30	CNPH*6124A**	OVLAAB048112	47,000	11.0	13.2
4130225	24ABB348C30	CNPH*6124A**	OVLAAB060154	48,000	11.0	13.5
3689539	24ABB348C30	CNPH*6124A**+TDR		47,500	11.0	13.0
3043182	24ABB348C30	CNPV*4821A**	58CV(A,X)110−20	46,000	11.2	13.5
4130233	24ABB348C30	CNPV*4821A**	58HDV080−−20	46,000	11.0	13.2
3099075	24ABB348C30	CNPV*4821A**	58ME(B,C)100−20	46,500	11.5	13.5
3043180	24ABB348C30	CNPV*4821A**	58MV(B,C)080−20	45,500	11.2	13.2
3043181	24ABB348C30	CNPV*4821A**	58MV(B,C)100−20	46,000	11.2	13.2
3043183	24ABB348C30	CNPV*4821A**	58PH*090−16	46,000	11.2	13.5
3043184	24ABB348C30	CNPV*4821A**	58PH*110−20	46,000	11.5	13.5
3756756	24ABB348C30	CNPV*4821A**	58UVB080−20	45,500	11.2	13.2
3756757	24ABB348C30	CNPV*4821A**	58UVB100−20	46,000	11.2	13.2
4130214	24ABB348C30	CNPV*4821A**	58VLR120−20	45,500	11.0	13.5
4130213	24ABB348C30	CNPV*4821A**	58VMR120−20	45,500	11.0	13.5
4734011	24ABB348C30	CNPV*4821A**	59*N*A100V21**20	45,500	11.2	13.5
4733980	24ABB348C30	CNPV*4821A**	59*P5A080E17**16	45,500	11.0	13.0

See notes on page 36

COMBINATION RATINGS

AHRI Ref. No.	Model Number	Indoor Model	Furnace Model	Capacity	EER	SEER
4733981	24ABB348C30	CNPV*4821A**	59*P5A100E21**16	45,500	11.0	13.3
3043179	24ABB348C30	CNPV*4821A**+TDR		46,500	10.7	13.0
3043187	24ABB348C30	CNPV*4824A**	58CV(A,X)135−22	46,000	11.5	13.5
3043188	24ABB348C30	CNPV*4824A**	58CV(A,X)155−22	46,000	11.5	13.5
4130234	24ABB348C30	CNPV*4824A**	58HDV080−−20	46,000	11.0	13.2
4130235	24ABB348C30	CNPV*4824A**	58HDV100−−20	46,000	11.0	13.2
3099076	24ABB348C30	CNPV*4824A**	58ME(B,C)120−20	46,500	11.5	14.0
3043186	24ABB348C30	CNPV*4824A**	58MV(B,C)120−20	46,000	11.2	13.5
3043189	24ABB348C30	CNPV*4824A**	58PH*135−20	46,000	11.5	13.5
3756758	24ABB348C30	CNPV*4824A**	58UVB120−20	46,000	11.2	13.5
4734012	24ABB348C30	CNPV*4824A**	59*N*A100V21**20	45,500	11.2	13.5
4734013	24ABB348C30	CNPV*4824A**	59*N*A120V24**22	45,500	11.4	13.7
4733982	24ABB348C30	CNPV*4824A**	59*P5A100E21**16	45,500	11.0	13.3
4733983	24ABB348C30	CNPV*4824A**	59*P5A120E24**22	46,000	11.4	13.7
3043185	24ABB348C30	CNPV*4824A**+TDR		46,500	10.7	13.0
3043192	24ABB348C30	CNPV*6024A**	58CV(A,X)135−22	47,000	11.7	14.0
3043193	24ABB348C30	CNPV*6024A**	58CV(A,X)155−22	47,000	11.7	14.0
4130236	24ABB348C30	CNPV*6024A**	58HDV080−−20	47,000	11.0	13.5
4130237	24ABB348C30	CNPV*6024A**	58HDV100−−20	47,000	11.0	13.5
3099077	24ABB348C30	CNPV*6024A**	58ME(B,C)120−20	46,500	11.5	14.0
3043191	24ABB348C30	CNPV*6024A**	58MV(B,C)120−20	47,000	11.5	13.5
3043194	24ABB348C30	CNPV*6024A**	58PH*135−20	47,000	11.7	13.5
3756759	24ABB348C30	CNPV*6024A**	58UVB120−20	47,000	11.5	13.5
4734014	24ABB348C30	CNPV*6024A**	59*N*A100V21**20	46,000	11.4	13.7
4734015	24ABB348C30	CNPV*6024A**	59*N*A120V24**22	46,000	11.5	14.0
4733984	24ABB348C30	CNPV*6024A**	59*P5A100E21**16	46,500	11.4	13.7
4733985	24ABB348C30	CNPV*6024A**	59*P5A120E24**22	47,000	11.5	14.0
3043190	24ABB348C30	CNPV*6024A**+TDR		47,500	11.0	13.2
3689534	24ABB348C30	CNPV*6124A**	58CV(A,X)135−22	47,500	12.0	14.5
3689535	24ABB348C30	CNPV*6124A**	58CV(A,X)155−22	47,500	12.0	14.5
4130238	24ABB348C30	CNPV*6124A**	58HDV080−−20	47,000	11.0	13.5
4130239	24ABB348C30	CNPV*6124A**	58HDV100−−20	47,000	11.5	13.5
3689538	24ABB348C30	CNPV*6124A**	58HDV100−−20 (DWNFLW ONLY)	47,500	11.0	13.5
3689537	24ABB348C30	CNPV*6124A**	58ME(B,C)120−20	47,500	12.0	14.5
3689533	24ABB348C30	CNPV*6124A**	58MV(B,C)120−20	47,500	11.5	14.0
3689536	24ABB348C30	CNPV*6124A**	58PH*135−20	47,500	11.5	14.0
3689749	24ABB348C30	CNPV*6124A**	58UVB120−20	47,500	11.5	14.0
4734016	24ABB348C30	CNPV*6124A**	59*N*A100V21**20	47,000	11.5	14.0
4734017	24ABB348C30	CNPV*6124A**	59*N*A120V24**22	47,000	11.8	14.2
4733986	24ABB348C30	CNPV*6124A**	59*P5A100E21**16	47,000	11.4	13.7
4733987	24ABB348C30	CNPV*6124A**	59*P5A120E24**22	47,500	11.8	14.2
3689532	24ABB348C30	CNPV*6124A**		47,500	11.0	13.5
3043222	24ABB348C30	CSPH*4812A**	58CV(A,X)090−16	46,000	11.2	13.2
3043223	24ABB348C30	CSPH*4812A**	58CV(A,X)110−20	46,000	11.2	13.5
3043224	24ABB348C30	CSPH*4812A**	58CV(A,X)135−22	46,000	11.5	13.5
3043225	24ABB348C30	CSPH*4812A**	58CV(A,X)155−22	46,000	11.7	13.5
3689556	24ABB348C30	CSPH*4812A**	58HDV080−−20	46,500	11.0	13.5
3689557	24ABB348C30	CSPH*4812A**	58HDV100−−20	46,500	11.0	13.5
3099084	24ABB348C30	CSPH*4812A**	58ME(B,C)080−16	46,500	11.0	13.5
3099085	24ABB348C30	CSPH*4812A**	58ME(B,C)100−20	46,500	11.5	14.0
3099086	24ABB348C30	CSPH*4812A**	58ME(B,C)120−20	46,500	11.5	14.0
3043219	24ABB348C30	CSPH*4812A**	58MV(B,C)080−20	45,500	11.2	13.2
3043220	24ABB348C30	CSPH*4812A**	58MV(B,C)100−20	46,000	11.2	13.2
3043221	24ABB348C30	CSPH*4812A**	58MV(B,C)120−20	46,000	11.2	13.5
3043226	24ABB348C30	CSPH*4812A**	58PH*090−16	46,000	11.2	13.5
3043227	24ABB348C30	CSPH*4812A**	58PH*110−20	46,000	11.5	13.5
3043228	24ABB348C30	CSPH*4812A**	58PH*135−20	46,000	11.5	13.5
4130227	24ABB348C30	CSPH*4812A**	58VLR120−20	46,000	11.0	13.5
4130226	24ABB348C30	CSPH*4812A**	58VMR120−20	46,000	11.0	13.5
4734024	24ABB348C30	CSPH*4812A**	59*N*A100V21**20	45,500	11.2	13.5
4734025	24ABB348C30	CSPH*4812A**	59*N*A120V24**22	46,000	11.4	13.7
4733996	24ABB348C30	CSPH*4812A**	59*P5A100E21**16	46,000	11.2	13.5
4733997	24ABB348C30	CSPH*4812A**	59*P5A120E24**22	46,000	11.4	13.7
4130228	24ABB348C30	CSPH*4812A**	OVLAAB060154	47,000	11.0	13.2
3043218	24ABB348C30	CSPH*4812A**+TDR		46,500	10.7	13.0
3043233	24ABB348C30	CSPH*6012A**	58CV(A,X)090−16	47,000	11.7	13.5
3043234	24ABB348C30	CSPH*6012A**	58CV(A,X)110−20	47,000	11.7	13.5
3043235	24ABB348C30	CSPH*6012A**	58CV(A,X)135−22	47,000	11.7	14.0
3043236	24ABB348C30	CSPH*6012A**	58CV(A,X)155−22	47,000	11.7	14.0
3689558	24ABB348C30	CSPH*6012A**	58HDV080−−20	47,500	11.0	13.5
3689559	24ABB348C30	CSPH*6012A**	58HDV100−−20	47,500	11.0	13.5
3099087	24ABB348C30	CSPH*6012A**	58ME(B,C)080−16	46,500	11.5	13.5
3099088	24ABB348C30	CSPH*6012A**	58ME(B,C)100−20	46,500	11.5	14.0

See notes on page 36

COMBINATION RATINGS

AHRI Ref. No.	Model Number	Indoor Model	Furnace Model	Capacity	EER	SEER
3099089	24ABB348C30	CSPH*6012A**	58ME(B,C)120−20	46,500	11.5	14.0
3043230	24ABB348C30	CSPH*6012A**	58MV(B,C)080−20	46,500	11.5	13.5
3043231	24ABB348C30	CSPH*6012A**	58MV(B,C)100−20	47,000	11.5	13.5
3043232	24ABB348C30	CSPH*6012A**	58MV(B,C)120−20	47,000	11.5	13.5
3043237	24ABB348C30	CSPH*6012A**	58PH*090−16	47,000	11.5	13.5
3043238	24ABB348C30	CSPH*6012A**	58PH*110−20	47,000	11.7	14.0
3043239	24ABB348C30	CSPH*6012A**	58PH*135−20	47,000	11.7	13.5
4130230	24ABB348C30	CSPH*6012A**	58VLR120−20	47,000	11.5	14.0
4130229	24ABB348C30	CSPH*6012A**	58VMR120−20	46,500	11.5	13.5
4734026	24ABB348C30	CSPH*6012A**	59*N*A100V21**20	46,500	11.4	13.7
4734027	24ABB348C30	CSPH*6012A**	59*N*A120V24**22	46,500	11.8	14.2
4733998	24ABB348C30	CSPH*6012A**	59*P5A080E17**16	46,500	11.2	13.5
4733999	24ABB348C30	CSPH*6012A**	59*P5A100E21**16	47,000	11.4	13.7
4734000	24ABB348C30	CSPH*6012A**	59*P5A120E24**22	47,000	11.5	14.0
4130231	24ABB348C30	CSPH*6012A**	OVLAAB048112	47,000	11.0	13.2
4130232	24ABB348C30	CSPH*6012A**	OVLAAB060154	48,000	11.0	13.5
3043229	24ABB348C30	CSPH*6012A**+TDR		47,500	11.0	13.2
3930021	24ABB348C30	FB4CNF048		47,000	11.0	13.0
4208556	24ABB348C30	FB4CNF048+TXV		47,000	11.0	13.0
3930022	24ABB348C30	FB4CNF060		47,000	11.0	13.5
3043244	24ABB348C30	FE4AN(B,F)005+UI		47,000	11.7	14.0
3043245	24ABB348C30	FE4ANB006+UI		47,500	12.2	14.5
3404510	24ABB348C30	FV4CN(B,F)005		47,000	11.7	14.0
3404511	24ABB348C30	FV4CNB006		47,500	12.2	14.5
3752049	24ABB348C30	FX4DN(B,F)049		47,000	11.5	14.0
3752050	24ABB348C30	FX4DN(B,F)061		47,500	12.0	14.5
3930024	24ABB348C30	FY5BNB060		47,000	11.0	13.0
3930023	24ABB348C30	FY5BNF048		47,500	11.0	13.0
4208557	24ABB348C30	FY5BNF048+TXV		47,500	11.0	13.0
3285423	24ABB360C31	†CAP**6024A**+TDR		59,500	11.2	13.0
3285428	24ABB360C31	CAP**6021A**	58CV(A,X)110−20	58,500	11.2	13.2
3285453	24ABB360C31	CAP**6021A**	58ME(B,C)100−20	58,000	11.0	13.5
3285429	24ABB360C31	CAP**6021A**	58PH*110−20	58,500	11.5	13.5
3285424	24ABB360C31	CAP**6021A**+TDR		58,500	11.2	13.0
3285431	24ABB360C31	CAP**6024A**	58CV(A,X)135−22	58,500	11.5	13.5
3285432	24ABB360C31	CAP**6024A**	58CV(A,X)155−22	58,500	11.5	13.2
3285454	24ABB360C31	CAP**6024A**	58ME(B,C)120−20	58,000	11.0	13.5
3285430	24ABB360C31	CAP**6024A**	58MV(B,C)120−20	58,000	11.2	13.0
3285433	24ABB360C31	CAP**6024A**	58PH*135−20	58,000	11.5	13.2
3673052	24ABB360C31	CAP**6024A**	58UVB120−20	58,000	11.2	13.0
4734035	24ABB360C31	CAP**6024A**	59*N*A120V24**22	58,000	11.0	13.3
4734028	24ABB360C31	CAP**6024A**	59*P5A120E24**22	58,000	11.0	13.3
3689511	24ABB360C31	CAP**6025A**	58MV(B,C)120−20	59,500	11.0	13.0
3689747	24ABB360C31	CAP**6025A**	58UVB120−20	59,500	11.0	13.0
4734036	24ABB360C31	CAP**6025A**	59*N*A120V24**22	58,000	11.0	13.3
4734029	24ABB360C31	CAP**6025A**	59*P5A120E24**22	58,000	11.0	13.3
3689510	24ABB360C31	CAP**6025A**+TDR		59,500	11.0	13.0
3285439	24ABB360C31	CNPH*6024A**	58CV(A,X)110−20	58,000	11.2	13.2
3285440	24ABB360C31	CNPH*6024A**	58CV(A,X)135−22	58,500	11.5	13.5
3285441	24ABB360C31	CNPH*6024A**	58CV(A,X)155−22	58,500	11.5	13.2
3285456	24ABB360C31	CNPH*6024A**	58ME(B,C)080−16	57,500	11.0	13.0
3285457	24ABB360C31	CNPH*6024A**	58ME(B,C)100−20	58,000	11.0	13.5
3285458	24ABB360C31	CNPH*6024A**	58ME(B,C)120−20	58,000	11.0	13.5
3285438	24ABB360C31	CNPH*6024A**	58MV(B,C)120−20	58,000	11.2	13.0
3285442	24ABB360C31	CNPH*6024A**	58PH*110−20	58,500	11.5	13.5
3285443	24ABB360C31	CNPH*6024A**	58PH*135−20	58,000	11.5	13.2
4734039	24ABB360C31	CNPH*6024A**	59*N*A120V24**22	57,500	11.2	13.5
4734032	24ABB360C31	CNPH*6024A**	59*P5A120E24**22	57,500	11.0	13.3
3285426	24ABB360C31	CNPH*6024A**+TDR		59,500	11.2	13.0
3689520	24ABB360C31	CNPH*6124A**	58CV(A,X)110−20	59,500	11.0	13.0
3689521	24ABB360C31	CNPH*6124A**	58CV(A,X)135−22	59,500	11.0	13.5
3689522	24ABB360C31	CNPH*6124A**	58CV(A,X)155−22	59,500	11.0	13.5
3689524	24ABB360C31	CNPH*6124A**	58ME(B,C)080−16	59,500	11.0	13.0
3689525	24ABB360C31	CNPH*6124A**	58ME(B,C)100−20	59,500	11.0	13.5
3689526	24ABB360C31	CNPH*6124A**	58ME(B,C)120−20	59,500	11.0	13.5
3689519	24ABB360C31	CNPH*6124A**	58MV(B,C)120−20	59,500	11.0	13.0
3689523	24ABB360C31	CNPH*6124A**	58PH*135−20	59,500	11.0	13.5
4734040	24ABB360C31	CNPH*6124A**	59*N*A120V24**22	58,000	11.0	13.3
4734033	24ABB360C31	CNPH*6124A**	59*P5A120E24**22	58,000	11.2	13.5
3689518	24ABB360C31	CNPH*6124A**+TDR		59,500	11.0	13.0
3285435	24ABB360C31	CNPV*6024A**	58CV(A,X)135−22	58,500	11.5	13.5
3285436	24ABB360C31	CNPV*6024A**	58CV(A,X)155−22	58,500	11.5	13.2

See notes on page 36

COMBINATION RATINGS

AHRI Ref. No.	Model Number	Indoor Model	Furnace Model	Capacity	EER	SEER
3285455	24ABB360C31	CNPV*6024A**	58ME(B,C)120−20	58,000	11.0	13.5
3285434	24ABB360C31	CNPV*6024A**	58MV(B,C)120−20	58,000	11.2	13.0
3285437	24ABB360C31	CNPV*6024A**	58PH*135−20	58,000	11.5	13.2
3756904	24ABB360C31	CNPV*6024A**	58UVB120−20	58,000	11.2	13.0
4734037	24ABB360C31	CNPV*6024A**	59*N*A120V24**22	57,500	11.2	13.5
4734030	24ABB360C31	CNPV*6024A**	59*P5A120E24**22	57,500	11.0	13.3
3285425	24ABB360C31	CNPV*6024A**+TDR		59,500	11.2	13.0
3689514	24ABB360C31	CNPV*6124A**	58CV(A,X)135−22	59,500	11.0	13.5
3689515	24ABB360C31	CNPV*6124A**	58CV(A,X)155−22	59,500	11.0	13.5
3689517	24ABB360C31	CNPV*6124A**	58ME(B,C)120−20	59,500	11.0	13.5
3689513	24ABB360C31	CNPV*6124A**	58MV(B,C)120−20	59,500	11.0	13.0
3689516	24ABB360C31	CNPV*6124A**	58PH*135−20	59,500	11.0	13.5
3689748	24ABB360C31	CNPV*6124A**	58UVB120−20	59,500	11.0	13.0
4734038	24ABB360C31	CNPV*6124A**	59*N*A120V24**22	58,500	11.2	13.5
4734031	24ABB360C31	CNPV*6124A**	59*P5A120E24**22	58,500	11.2	13.5
3689512	24ABB360C31	CNPV*6124A**+TDR		59,500	11.0	13.0
3285445	24ABB360C31	CSPH*6012A**	58CV(A,X)110−20	58,500	11.2	13.2
3285446	24ABB360C31	CSPH*6012A**	58CV(A,X)135−22	58,500	11.5	13.5
3285447	24ABB360C31	CSPH*6012A**	58CV(A,X)155−22	58,500	11.5	13.2
3689527	24ABB360C31	CSPH*6012A**	58HDV100−−20	59,500	11.0	13.0
3285459	24ABB360C31	CSPH*6012A**	58ME(B,C)080−16	58,000	11.0	13.0
3285460	24ABB360C31	CSPH*6012A**	58ME(B,C)100−20	58,500	11.0	13.5
3285461	24ABB360C31	CSPH*6012A**	58ME(B,C)120−20	58,500	11.0	13.5
3285444	24ABB360C31	CSPH*6012A**	58MV(B,C)120−20	58,000	11.2	13.0
3285448	24ABB360C31	CSPH*6012A**	58PH*110−20	58,500	11.5	13.5
3285449	24ABB360C31	CSPH*6012A**	58PH*135−20	58,000	11.5	13.2
4734041	24ABB360C31	CSPH*6012A**	59*N*A120V24**22	58,000	11.2	13.5
4734034	24ABB360C31	CSPH*6012A**	59*P5A120E24**22	58,000	11.2	13.5
3285427	24ABB360C31	CSPH*6012A**+TDR		59,500	11.2	13.0
4208558	24ABB360C31	FB4CNF060		59,500	11.0	13.0
3285451	24ABB360C31	FE4ANB006+UI		59,500	11.7	13.5
3404615	24ABB360C31	FV4CNB006		59,500	11.7	13.5
3752051	24ABB360C31	FX4DN(B,F)061		60,000	11.5	14.0
4208559	24ABB360C31	FY5BNB060		59,500	11.0	13.0

* Tested combination

EER — Energy Efficiency Ratio

SEER — Seasonal Energy Efficiency Ratio

TDR — Time−Delay Relay. In most cases, only 1 method should be used to achieve TDR function. Using more than 1 method in a system may cause degradation in performance. Use either the accessory Time−Delay Relay KAATD0101TDR or a furnace equipped with TDR. Most Carrier furnaces are equipped with TDR.

UI — User Interface

NOTES:
1. Ratings are net values reflecting the effects of circulating fan motor heat. Supplemental electric heat is not included.
2. Tested outdoor/indoor combinations have been tested in accordance with DOE test procedures for central air conditioners. Ratings for other combinations are determined under DOE computer simulation procedures.
3. Determine actual CFM values obtainable for your system by referring to fan performance data in fan coil or furnace coil literature.
4. Do not apply with capillary tube coils as performance and reliability are significantly affected.

Ratings contained in this document are subject to change at any time. Always refer to the AHRI directory (www.ahridirectory.org) for the most up−to−date ratings information.

DETAILED COOLING CAPACITIES#

EVAPORATOR AIR		CONDENSER ENTERING AIR TEMPERATURES °F (°C)																	
		75 (23.9)			85 (29.4)			95 (35)			105 (40.6)			115 (46.1)			125 (51.7)		
CFM	EWB °F (°C)	Capacity MBtuh		Total System KW**	Capacity MBtuh		Total System KW**	Capacity MBtuh		Total System KW**	Capacity MBtuh		Total System KW**	Capacity MBtuh		Total System KW**	Capacity MBtuh		Total System KW**
		Total	Sens‡		Total	Sens‡		Total	Sens‡		Total	Sens‡		Total	Sens‡		Total	Sens‡	
24ABB318C30 Outdoor Section With CAP**1814A** Indoor Section																			
525	72 (22.2)	21.05	10.18	1.27	20.09	9.84	1.42	19.06	9.48	1.58	18.01	9.12	1.76	16.89	8.74	1.96	15.64	8.33	2.17
	67 (19.4)	19.27	12.51	1.27	18.38	12.16	1.42	17.43	11.79	1.58	16.45	11.42	1.76	15.41	11.03	1.96	14.26	10.61	2.17
	62 (16.7)	17.68	14.82	1.27	16.86	14.46	1.42	16.01	14.09	1.58	15.13	13.68	1.76	14.28	14.28	1.96	13.40	13.40	2.17
	57 (13.9)	17.16	17.16	1.27	16.51	16.51	1.42	15.81	15.81	1.58	15.07	15.07	1.76	14.28	14.28	1.96	13.40	13.40	2.17
600	72 (22.2)	21.40	10.67	1.29	20.39	10.32	1.44	19.33	9.96	1.61	18.25	9.60	1.79	17.08	9.21	1.98	15.80	8.79	2.20
	67 (19.4)	19.61	13.30	1.30	18.68	12.95	1.45	17.70	12.58	1.61	16.69	12.21	1.79	15.61	11.81	1.99	14.43	11.38	2.20
	62 (16.7)	18.08	15.91	1.30	17.25	15.53	1.45	16.41	16.41	1.61	15.63	15.63	1.79	14.79	14.79	1.99	13.85	13.85	2.20
	57 (13.9)	17.87	17.87	1.30	17.17	17.17	1.45	16.42	16.42	1.61	15.63	15.63	1.79	14.79	14.79	1.99	13.85	13.85	2.20
675	72 (22.2)	21.65	11.13	1.32	20.61	10.78	1.47	19.51	10.42	1.63	18.40	10.05	1.82	17.21	9.66	2.01	15.89	9.24	2.23
	67 (19.4)	19.86	14.07	1.33	18.90	13.71	1.47	17.89	13.34	1.64	16.86	12.96	1.82	15.76	12.55	2.01	14.55	12.11	2.23
	62 (16.7)	18.46	18.35	1.33	17.70	17.70	1.48	16.91	16.91	1.64	16.09	16.09	1.82	15.20	15.20	2.01	14.21	14.21	2.23
	57 (13.9)	18.45	18.45	1.33	17.70	17.70	1.48	16.91	16.91	1.64	16.09	16.09	1.82	15.20	15.20	2.01	14.21	14.21	2.23

Cooling Indoor Model	Capacity	Power	Furnace Model
*CAP**1814A**	1.00	1.00	
CAP**2414A**	1.02	1.00	
CAP**2417A**	1.02	1.00	
CNPF*2418A**	1.02	1.00	
CNPH*2417A**	1.02	1.00	
CNPV*1814A**	1.00	1.00	
CNPV*1917A**	1.02	1.02	
CNPV*2414A**	1.02	1.00	
CNPV*2417A**	1.02	1.00	
CSPH*2412A**	1.02	1.00	
FB4CNF018	0.99	0.99	
FB4CNF018	0.99	0.99	
FB4CNF024	0.99	0.99	
FB4CNF024	0.99	0.99	
FE4ANF002	0.98	0.88	
FF1ENP018	1.00	1.00	
FF1ENP019	1.02	0.93	
FF1ENP024	1.01	1.01	
FF1ENP025	1.02	0.92	
FV4BNF002	0.98	0.88	
FV4CNF002	0.98	0.88	
FX4CNF018	1.02	0.92	
FX4CNF024	1.02	0.92	
FX4DN(B,F)031	1.02	0.93	
FX4DNF019	1.02	0.93	
FX4DNF025	1.02	0.93	
FY4ANF018	1.00	1.00	
FY4ANF024	1.02	1.02	
FY5BNF018	0.99	0.99	
FY5BNF018	0.99	0.99	
FY5BNF024	0.99	0.99	
FY5BNF024	0.99	0.99	
CAP**1814A**	0.99	0.91	58CV(A,X)070–12
CAP**2414A**	1.01	0.91	58CV(A,X)070–12
CNPH*2417A**	1.01	0.91	58CV(A,X)070–12
CNPV*1814A**	0.99	0.91	58CV(A,X)070–12
CNPV*2414A**	1.01	0.91	58CV(A,X)070–12
CSPH*2412A**	1.01	0.91	58CV(A,X)070–12
CAP**2417A**	1.01	0.91	58CV(A,X)090–16
CNPH*2417A**	1.01	0.91	58CV(A,X)090–16
CNPV*1917A**	1.02	0.93	58CV(A,X)090–16
CNPV*2417A**	1.01	0.91	58CV(A,X)090–16

Cooling Indoor Model	Capacity	Power	Furnace Model
CSPH*2412A**	1.02	0.92	58CV(A,X)090–16
CNPH*2417A**	1.02	0.93	58HDV040––12
CNPV*1917A**	1.06	0.95	58HDV040––12
CNPV*2417A**	1.02	0.93	58HDV040––12
CSPH*2412A**	1.04	0.95	58HDV040––12
CNPH*2417A**	1.02	0.93	58HDV060––12
CNPV*1917A**	1.06	0.95	58HDV060––12
CNPV*2417A**	1.02	0.93	58HDV060––12
CSPH*2412A**	1.04	0.95	58HDV060––12
CAP**2417A**	1.01	0.92	58ME(B,C)060–12
CNPH*2417A**	1.01	0.92	58ME(B,C)060–12
CNPV*2417A**	1.01	0.92	58ME(B,C)060–12
CSPH*2412A**	1.01	0.92	58ME(B,C)060–12
CAP**2417A**	1.01	0.92	58MEB040–12
CAP**2417A**	1.01	0.92	58MEB040–12
CNPH*2417A**	1.01	0.92	58MEB040–12
CNPH*2417A**	1.01	0.92	58MEB040–12
CNPV*1917A**	1.02	0.93	58MEB040–12
CNPV*2417A**	1.01	0.92	58MEB040–12
CNPV*2417A**	1.01	0.92	58MEB040–12
CSPH*2412A**	1.01	0.92	58MEB040–12
CSPH*2412A**	1.01	0.92	58MEB040–12
CNPV*1917A**	1.02	0.93	58MEC060–12
CNPH*2417A**	1.01	0.91	58MV(B,C)040–14
CSPH*2412A**	1.02	0.92	58MV(B,C)040–14
CAP**2417A**	1.01	0.91	58MV(B,C)060–14
CNPH*2417A**	1.01	0.91	58MV(B,C)060–14
CNPV*1917A**	1.02	0.93	58MV(B,C)060–14
CNPV*2417A**	1.01	0.91	58MV(B,C)060–14
CSPH*2412A**	1.02	0.92	58MV(B,C)060–14
CNPH*2417A**	1.01	0.91	58MV(B,C)080–14
CSPH*2412A**	1.01	0.91	58MV(B,C)080–14
CAP**1814A**	1.01	0.91	58PH*045–08
CAP**2414A**	1.02	0.92	58PH*045–08
CNPH*2417A**	1.02	0.92	58PH*045–08
CNPV*1814A**	1.01	0.91	58PH*045–08
CNPV*2414A**	1.02	0.92	58PH*045–08
CSPH*2412A**	1.02	0.92	58PH*045–08
CAP**2417A**	1.01	0.91	58UVB060–14
CAP**2417A**	1.01	0.91	58UVB060–14
CAP**2417A**	1.01	0.91	58UVB060–14
CNPV*1917A**	1.02	0.93	58UVB060–14

Cooling Indoor Model	Capacity	Power	Furnace Model
CNPV*1917A**	1.02	0.93	58UVB060–14
CNPV*1917A**	1.02	0.93	58UVB060–14
CNPV*2417A**	1.01	0.91	58UVB060–14
CNPV*2417A**	1.01	0.91	58UVB060–14
CNPV*2417A**	1.01	0.91	58UVB060–14
CAP**2417A**	1.02	0.93	58VLR105–12
CNPH*2417A**	1.02	0.93	58VLR105–12
CNPV*1917A**	1.02	0.93	58VLR105–12
CNPV*2417A**	1.02	0.93	58VLR105–12
CSPH*2412A**	1.02	0.93	58VLR105–12
CAP**2417A**	1.01	0.92	58VMR105–12
CNPH*2417A**	1.00	0.92	58VMR105–12
CNPV*1917A**	1.01	0.92	58VMR105–12
CNPV*2417A**	1.00	0.92	58VMR105–12
CSPH*2412A**	1.01	0.92	58VMR105–12
CAP**2417A**	1.01	0.92	59*N*A060V17**14
CNPH*2417A**	1.01	0.92	59*N*A060V17**14
CNPV*1917A**	1.01	0.93	59*N*A060V17**14
CNPV*2417A**	1.01	0.92	59*N*A060V17**14
CSPH*2412A**	1.01	0.93	59*N*A060V17**14
CAP**2417A**	1.00	0.92	59*N*A080V17**14
CNPH*2417A**	1.00	0.92	59*N*A080V17**14
CNPV*1917A**	1.01	0.92	59*N*A080V17**14
CNPV*2417A**	1.00	0.92	59*N*A080V17**14
CSPH*2412A**	1.01	0.92	59*N*A080V17**14
CAP**1814A**	0.98	0.93	59*P5A040E14**10
CAP**2414A**	1.00	0.93	59*P5A040E14**10
CAP**2417A**	1.00	0.92	59*P5A040E14**10
CNPH*2417A**	1.00	0.93	59*P5A040E14**10
CNPV*1814A**	0.98	0.92	59*P5A040E14**10
CNPV*1917A**	1.01	0.93	59*P5A040E14**10
CNPV*2414A**	1.00	0.93	59*P5A040E14**10
CNPV*2417A**	1.00	0.93	59*P5A040E14**10
CSPH*2412A**	1.00	0.93	59*P5A040E14**10
CAP**2417A**	1.01	0.93	OVLAAB036098
CAP**2417A**	1.01	0.93	OVLAAB036098
CNPH*2417A**	1.01	0.93	OVLAAB036098
CNPH*2417A**	1.01	0.93	OVLAAB036098
CNPV*1917A**	1.02	0.93	OVLAAB036098
CNPV*1917A**	1.02	0.93	OVLAAB036098
CNPV*2417A**	1.01	0.93	OVLAAB036098
CNPV*2417A**	1.01	0.93	OVLAAB036098

DETAILED COOLING CAPACITIES# (CONT.)

24ABB318C30 Outdoor Section With CAP1814A** Indoor Section**

Cooling Indoor Model	Capacity	Power	Furnace Model
CSPH*2412A**	1.02	0.93	OVLAAB036098
CSPH*2412A**	1.02	0.93	OVLAAB036098
CAP**2417A**	1.02	0.93	OVMAAB036098
CNPH*2417A**	1.02	0.93	OVMAAB036098
CNPV*1917A**	1.02	0.93	OVMAAB036098
CNPV*2417A**	1.02	0.93	OVMAAB036098
CSPH*2412A**	1.02	0.93	OVMAAB036098

See notes on pg. 53

DETAILED COOLING CAPACITIES# (CONT.)

EVAPORATOR AIR		CONDENSER ENTERING AIR TEMPERATURES °F (°C)																	
		75 (23.9)			85 (29.4)			95 (35)			105 (40.6)			115 (46.1)			125 (51.7)		
CFM	EWB °F (°C)	Capacity MBtuh		Total System KW**	Capacity MBtuh		Total System KW**	Capacity MBtuh		Total System KW**	Capacity MBtuh		Total System KW**	Capacity MBtuh		Total System KW**	Capacity MBtuh		Total System KW**
		Total	Sens‡		Total	Sens‡		Total	Sens‡		Total	Sens‡		Total	Sens‡		Total	Sens‡	
24ABB324C30 Outdoor Section With CAP**2414A** Indoor Section																			
700	72 (22.2)	26.88	12.92	1.68	25.69	12.51	1.87	24.42	12.07	2.08	23.10	11.62	2.32	21.68	11.14	2.58	20.12	10.63	2.86
	67 (19.4)	24.51	15.85	1.67	23.40	15.42	1.86	22.24	14.98	2.07	21.01	14.52	2.31	19.71	14.04	2.57	18.29	13.52	2.85
	62 (16.7)	22.41	18.77	1.66	21.40	18.33	1.85	20.35	17.87	2.07	19.27	17.38	2.30	18.24	18.24	2.56	17.16	17.16	2.85
	57 (13.9)	21.79	21.79	1.66	20.98	20.98	1.85	20.13	20.13	2.07	19.22	19.22	2.30	18.24	18.24	2.56	17.16	17.16	2.85
800	72 (22.2)	27.35	13.56	1.72	26.11	13.14	1.91	24.79	12.70	2.12	23.43	12.24	2.36	21.95	11.76	2.61	20.34	11.23	2.90
	67 (19.4)	24.96	16.88	1.71	23.81	16.45	1.90	22.60	16.00	2.11	21.33	15.53	2.35	19.98	15.04	2.61	18.51	14.51	2.89
	62 (16.7)	22.94	20.17	1.70	21.92	19.70	1.89	20.92	20.92	2.11	19.96	19.96	2.34	18.91	18.91	2.60	17.76	17.76	2.89
	57 (13.9)	22.71	22.71	1.70	21.84	21.84	1.89	20.93	20.93	2.11	19.96	19.96	2.34	18.91	18.91	2.60	17.76	17.76	2.89
900	72 (22.2)	27.70	14.16	1.76	26.41	13.74	1.95	25.06	13.29	2.16	23.65	12.83	2.39	22.14	12.34	2.65	20.47	11.81	2.93
	67 (19.4)	25.30	17.86	1.75	24.11	17.43	1.94	22.87	16.97	2.15	21.57	16.50	2.39	20.18	15.99	2.64	18.68	15.45	2.93
	62 (16.7)	23.45	23.45	1.74	22.55	22.55	1.93	21.58	21.58	2.15	20.56	20.56	2.38	19.45	19.45	2.64	18.24	18.24	2.93
	57 (13.9)	23.47	23.47	1.74	22.55	22.55	1.93	21.58	21.58	2.15	20.56	20.56	2.38	19.45	19.45	2.64	18.24	18.24	2.93

Cooling Indoor Model	Capacity	Power	Furnace Model
*CAP**2414A**	1.00	1.00	
CAP**2417A**	1.00	1.00	
CAP**3014A**	1.02	1.02	
CAP**3017A**	1.02	1.02	
CNPF*2418A**	1.00	1.00	
CNPH*2417A**	1.00	1.00	
CNPH*3017A**	1.02	1.02	
CNPV*2414A**	1.00	1.00	
CNPV*2417A**	1.00	1.00	
CNPV*3014A**	1.02	1.02	
CNPV*3017A**	1.02	1.02	
CSPH*2412A**	1.00	1.00	
CSPH*3012A**	1.02	1.02	
FB4CNF024	0.99	0.96	
FB4CNF030	1.02	0.99	
FE4AN(B,F)003	1.02	0.89	
FE4ANF002	0.97	0.87	
FE5ANB004	1.04	0.89	
FF1ENP024	0.99	0.99	
FF1ENP025	1.02	0.93	
FF1ENP031	1.02	0.93	
FV4BN(B,F)003	1.02	0.89	
FV4BNF002	0.97	0.87	
FX4CNF024	1.01	0.92	
FX4CNF030	1.03	0.92	
FY4ANF030	1.01	0.98	
FY5BNF024	0.99	0.96	
FY5BNF030	1.02	0.99	
CAP**2414A**	0.99	0.91	58CV(A,X)070–12
CAP**3014A**	1.00	0.89	58CV(A,X)070–12
CNPH*2417A**	0.99	0.91	58CV(A,X)070–12
CNPH*3017A**	1.01	0.90	58CV(A,X)070–12
CNPV*2414A**	0.99	0.91	58CV(A,X)070–12
CNPV*3014A**	1.01	0.90	58CV(A,X)070–12
CSPH*2412A**	0.99	0.91	58CV(A,X)070–12
CSPH*3012A**	1.01	0.90	58CV(A,X)070–12
CAP**2417A**	1.00	0.89	58CV(A,X)090–16
CAP**3017A**	1.01	0.90	58CV(A,X)090–16
CNPH*2417A**	1.00	0.89	58CV(A,X)090–16
CNPH*3017A**	1.01	0.90	58CV(A,X)090–16
CNPV*2417A**	1.00	0.89	58CV(A,X)090–16
CNPV*3017A**	1.01	0.90	58CV(A,X)090–16

Cooling Indoor Model	Capacity	Power	Furnace Model
CSPH*2412A**	1.01	0.90	58CV(A,X)090–16
CSPH*3012A**	1.01	0.90	58CV(A,X)090–16
CNPH*2417A**	1.00	0.91	58CV(A,X)110–20
CNPH*3017A**	1.01	0.90	58CV(A,X)110–20
CSPH*2412A**	1.01	0.92	58CV(A,X)110–20
CSPH*3012A**	1.01	0.90	58CV(A,X)110–20
CNPH*2417A**	1.00	0.91	58CV(A,X)135–22
CNPH*3017A**	1.01	0.88	58CV(A,X)135–22
CSPH*2412A**	1.01	0.90	58CV(A,X)135–22
CSPH*3012A**	1.02	0.91	58CV(A,X)135–22
CNPH*2417A**	1.00	0.91	58CV(A,X)155–22
CNPH*3017A**	1.01	0.90	58CV(A,X)155–22
CSPH*2412A**	1.01	0.90	58CV(A,X)155–22
CSPH*3012A**	1.02	0.91	58CV(A,X)155–22
CNPH*3017A**	1.02	0.93	58HDV040––12
CNPV*2417A**	1.00	0.93	58HDV040––12
CNPV*3017A**	1.02	0.93	58HDV040––12
CNPV*3117A**	1.04	0.95	58HDV040––12
CNPH*2417A**	1.00	0.93	58HDV060––12
CNPH*3017A**	1.03	0.94	58HDV060––12
CNPV*2417A**	1.00	0.93	58HDV060––12
CNPV*3017A**	1.03	0.94	58HDV060––12
CNPV*3117A**	1.04	0.93	58HDV060––12
CNPH*2417A**	1.02	0.93	58HDV080––20
CNPH*2417A**	1.01	0.92	58HDV100––20
CNPH*3017A**	1.04	0.92	58HDV100––20
CAP**2417A**	1.00	0.89	58MEB040–12
CAP**3017A**	1.00	0.89	58MEB040–12
CNPH*2417A**	1.00	0.89	58MEB040–12
CNPH*3017A**	1.00	0.89	58MEB040–12
CNPV*2417A**	1.00	0.89	58MEB040–12
CNPV*3017A**	1.00	0.89	58MEB040–12
CSPH*2412A**	1.00	0.89	58MEB040–12
CSPH*3012A**	1.00	0.89	58MEB040–12
CAP**2417A**	1.00	0.89	58MEB060–12
CAP**3017A**	1.00	0.89	58MEB060–12
CNPH*2417A**	1.00	0.89	58MEB060–12
CNPH*3017A**	1.00	0.89	58MEB060–12
CNPV*2417A**	1.00	0.89	58MEB060–12
CNPV*3017A**	1.00	0.89	58MEB060–12
CSPH*2412A**	1.00	0.89	58MEB060–12
CSPH*3012A**	1.00	0.89	58MEB060–12

Cooling Indoor Model	Capacity	Power	Furnace Model
CAP**2417A**	1.00	0.89	58MEB080–12
CAP**3017A**	1.00	0.89	58MEB080–12
CNPH*2417A**	1.00	0.89	58MEB080–12
CNPH*3017A**	1.00	0.89	58MEB080–12
CNPV*2417A**	1.00	0.89	58MEB080–12
CNPV*3017A**	1.00	0.89	58MEB080–12
CSPH*2412A**	1.00	0.89	58MEB080–12
CSPH*3012A**	1.00	0.89	58MEB080–12
CNPH*2417A**	1.00	0.91	58MV(B,C)040–14
CNPH*3017A**	1.01	0.90	58MV(B,C)040–14
CSPH*2412A**	1.01	0.92	58MV(B,C)040–14
CSPH*3012A**	1.01	0.90	58MV(B,C)040–14
CAP**2417A**	1.01	0.90	58MV(B,C)060–14
CAP**3017A**	1.02	0.89	58MV(B,C)060–14
CNPH*2417A**	1.01	0.92	58MV(B,C)060–14
CNPH*3017A**	1.02	0.89	58MV(B,C)060–14
CNPV*2417A**	1.01	0.92	58MV(B,C)060–14
CNPV*3017A**	1.02	0.89	58MV(B,C)060–14
CSPH*2412A**	1.02	0.91	58MV(B,C)060–14
CSPH*3012A**	1.03	0.92	58MV(B,C)060–14
CNPH*2417A**	0.99	0.91	58MV(B,C)080–14
CNPH*3017A**	1.01	0.90	58MV(B,C)080–14
CSPH*2412A**	1.01	0.90	58MV(B,C)080–14
CSPH*3012A**	1.01	0.90	58MV(B,C)080–14
CNPH*2417A**	0.98	0.90	58MV(B,C)080–20
CNPH*3017A**	1.00	0.89	58MV(B,C)080–20
CSPH*2412A**	1.00	0.91	58MV(B,C)080–20
CSPH*3012A**	1.00	0.89	58MV(B,C)080–20
CNPH*2417A**	1.00	0.91	58MV(B,C)100–20
CNPH*3017A**	1.01	0.90	58MV(B,C)100–20
CSPH*2412A**	1.01	0.90	58MV(B,C)100–20
CSPH*3012A**	1.01	0.90	58MV(B,C)100–20
CNPH*2417A**	1.00	0.89	58MV(B,C)120–20
CNPH*3017A**	1.02	0.89	58MV(B,C)120–20
CSPH*2412A**	1.01	0.90	58MV(B,C)120–20
CSPH*3012A**	1.02	0.91	58MV(B,C)120–20
CAP**2414A**	1.00	0.91	58PH*045–08
CAP**3014A**	1.02	0.91	58PH*045–08
CNPH*2417A**	1.00	0.91	58PH*045–08
CNPH*3017A**	1.02	0.91	58PH*045–08
CNPV*2414A**	1.00	0.91	58PH*045–08
CNPV*3014A**	1.02	0.91	58PH*045–08

DETAILED COOLING CAPACITIES# (CONT.)

24ABB324C30 Outdoor Section With CAP2414A** Indoor Section**

Cooling Indoor Model	Capacity	Power	Furnace Model
CSPH*2412A**	1.01	0.92	58PH*045–08
CSPH*3012A**	1.02	0.91	58PH*045–08
CAP**2417A**	1.00	0.91	58VLR105–12
CAP**3017A**	1.01	0.90	58VLR105–12
CNPH*2417A**	1.00	0.91	58VLR105–12
CNPH*3017A**	1.02	0.91	58VLR105–12
CNPH*3117A**	1.04	0.92	58VLR105–12
CNPV*2417A**	1.00	0.91	58VLR105–12
CNPV*3017A**	1.02	0.91	58VLR105–12
CNPV*3117A**	1.04	0.92	58VLR105–12
CSPH*2412A**	1.02	0.93	58VLR105–12
CSPH*3012A**	1.02	0.91	58VLR105–12
CAP**2417A**	0.99	0.91	58VMR105–12
CAP**3017A**	1.00	0.89	58VMR105–12
CNPH*2417A**	0.99	0.91	58VMR105–12
CNPH*3017A**	1.00	0.91	58VMR105–12
CNPH*3117A**	1.02	0.91	58VMR105–12
CNPV*2417A**	0.99	0.91	58VMR105–12
CNPV*3017A**	1.00	0.89	58VMR105–12
CNPV*3117A**	1.02	0.91	58VMR105–12
CSPH*2412A**	1.00	0.91	58VMR105–12
CSPH*3012A**	1.00	0.91	58VMR105–12
CAP**2417A**	1.00	0.91	OVLAAB036098
CAP**3017A**	1.01	0.92	OVLAAB036098
CNPH*2417A**	1.00	0.91	OVLAAB036098
CNPH*3017A**	1.01	0.92	OVLAAB036098
CNPH*3117A**	1.04	0.92	OVLAAB036098
CNPV*2417A**	1.00	0.91	OVLAAB036098
CNPV*3017A**	1.01	0.92	OVLAAB036098
CNPV*3117A**	1.04	0.92	OVLAAB036098
CSPH*2412A**	1.01	0.92	OVLAAB036098
CSPH*3012A**	1.02	0.93	OVLAAB036098
CAP**2417A**	1.00	0.91	OVMAAB036098
CAP**3017A**	1.01	0.92	OVMAAB036098
CNPH*2417A**	1.00	0.93	OVMAAB036098
CNPH*3017A**	1.01	0.92	OVMAAB036098
CNPH*3117A**	1.04	0.92	OVMAAB036098
CNPV*2417A**	1.00	0.93	OVMAAB036098
CNPV*3017A**	1.01	0.92	OVMAAB036098
CNPV*3117A**	1.04	0.92	OVMAAB036098
CSPH*2412A**	1.01	0.92	OVMAAB036098
CSPH*3012A**	1.02	0.93	OVMAAB036098
CAP**2417A**	1.00	0.91	OVMAAB042112
CAP**3017A**	1.01	0.90	OVMAAB042112
CNPH*2417A**	1.00	0.91	OVMAAB042112
CNPH*3017A**	1.01	0.90	OVMAAB042112
CNPH*3117A**	1.03	0.92	OVMAAB042112
CNPV*2417A**	1.00	0.91	OVMAAB042112
CNPV*3017A**	1.01	0.90	OVMAAB042112
CNPV*3117A**	1.03	0.92	OVMAAB042112
CSPH*2412A**	1.01	0.92	OVMAAB042112
CSPH*3012A**	1.01	0.90	OVMAAB042112

See notes on pg. 53

DETAILED COOLING CAPACITIES# (CONT.)

EVAPORATOR AIR		CONDENSER ENTERING AIR TEMPERATURES °F (°C)																	
		75 (23.9)			85 (29.4)			95 (35)			105 (40.6)			115 (46.1)			125 (51.7)		
CFM	EWB °F (°C)	Capacity MBtuh		Total System KW**	Capacity MBtuh		Total System KW**	Capacity MBtuh		Total System KW**	Capacity MBtuh		Total System KW**	Capacity MBtuh		Total System KW**	Capacity MBtuh		Total System KW**
		Total	Sens‡		Total	Sens‡		Total	Sens‡		Total	Sens‡		Total	Sens‡		Total	Sens‡	
24ABB330C30 Outdoor Section With CAP**3014A** Indoor Section																			
875	72 (22.2)	34.42	17.55	2.14	32.93	17.00	2.35	31.37	16.43	2.60	29.70	15.82	2.87	27.89	15.18	3.16	25.89	14.48	3.49
	67 (19.4)	31.38	21.54	2.13	30.01	20.98	2.34	28.55	20.39	2.59	27.00	19.78	2.86	25.33	19.12	3.15	23.50	18.41	3.48
	62 (16.7)	28.71	25.53	2.12	27.46	24.95	2.34	26.15	24.33	2.58	24.79	23.66	2.85	23.46	23.46	3.15	22.06	22.06	3.47
	57 (13.9)	27.97	27.97	2.11	26.95	26.95	2.34	25.88	25.88	2.58	24.72	24.72	2.85	23.46	23.46	3.15	22.06	22.06	3.47
1000	72 (22.2)	35.01	18.40	2.19	33.47	17.84	2.40	31.84	17.26	2.65	30.11	16.65	2.92	28.24	15.99	3.21	26.17	15.28	3.54
	67 (19.4)	31.95	22.91	2.17	30.51	22.34	2.39	29.00	21.75	2.64	27.40	21.13	2.91	25.68	20.46	3.20	23.79	19.73	3.53
	62 (16.7)	29.37	27.39	2.17	28.12	26.77	2.39	26.87	26.87	2.63	25.65	25.65	2.90	24.31	24.31	3.20	22.82	22.82	3.52
	57 (13.9)	29.11	29.11	2.16	28.03	28.03	2.38	26.88	26.88	2.63	25.65	25.65	2.90	24.31	24.31	3.20	22.82	22.82	3.52
1125	72 (22.2)	35.44	19.20	2.23	33.85	18.63	2.45	32.17	18.04	2.70	30.39	17.43	2.96	28.47	16.76	3.26	26.35	16.04	3.58
	67 (19.4)	32.36	24.22	2.22	30.89	23.65	2.44	29.34	23.05	2.68	27.70	22.41	2.95	25.94	21.73	3.25	24.01	20.98	3.57
	62 (16.7)	30.03	30.03	2.21	28.91	28.91	2.43	27.70	27.70	2.68	26.41	26.41	2.95	25.00	25.00	3.25	23.43	23.43	3.57
	57 (13.9)	30.05	30.05	2.21	28.92	28.92	2.43	27.70	27.70	2.68	26.41	26.41	2.95	25.00	25.00	3.25	23.43	23.43	3.57

Cooling Indoor Model	Capacity	Power	Furnace Model
*CAP**3014A**	1.00	1.00	
CAP**3017A**	1.00	1.00	
CAP**3614A**	1.01	0.99	
CAP**3617A**	1.01	0.99	
CAP**3619A**	1.01	1.01	
CAP**3621A**	1.01	0.99	
CAP**4823A**	1.02	1.02	
CNPF*3618A**	1.00	1.00	
CNPH*3017A**	1.00	1.00	
CNPH*3117A**	1.01	1.01	
CNPH*3617A**	1.00	1.00	
CNPV*3014A**	1.00	1.00	
CNPV*3017A**	1.00	1.00	
CNPV*3117A**	1.01	1.01	
CNPV*3617A**	1.00	1.00	
CNPV*3621A**	1.00	1.00	
CNPV*3717A**	1.02	1.02	
CSPH*3012A**	1.00	1.00	
CSPH*3612A**	1.01	0.99	
FB4CNF030	0.97	0.97	
FB4CNF030	0.97	0.97	
FB4CNF036	0.97	0.97	
FB4CNF036	0.97	0.97	
FE4AN(B,F)003	1.01	0.91	
FE4AN(B,F)005	1.03	0.91	
FE4ANF002	0.97	0.89	
FE5ANB004	1.03	0.91	
FF1ENP030	0.99	0.99	
FF1ENP031	1.01	0.92	
FF1ENP036	1.01	0.99	
FF1ENP037	1.01	0.95	
FV4BN(B,F)003	1.01	0.91	
FV4BN(B,F)005	1.03	0.91	
FV4BNF002	0.97	0.89	
FV4CN(B,F)003	1.01	0.91	
FV4CN(B,F)005	1.03	0.91	
FV4CNF002	0.97	0.89	
FX4CN(B,F)036	1.01	0.95	
FX4CNF030	1.01	0.92	
FX4DN(B,F)031	1.01	0.93	
FX4DN(B,F)037	1.02	0.94	
FX4DN(B,F)043	1.02	0.98	

Cooling Indoor Model	Capacity	Power	Furnace Model
FY4ANF030	0.99	0.98	
FY4ANF036	1.00	1.00	
FY5BNF030	0.97	0.97	
FY5BNF030	0.97	0.97	
FY5BNF036	0.97	0.97	
FY5BNF036	0.97	0.97	
CAP**3014A**	0.99	0.91	58CV(A,X)070–12
CAP**3614A**	0.99	0.91	58CV(A,X)070–12
CNPH*3017A**	0.99	0.91	58CV(A,X)070–12
CNPH*3117A**	1.01	0.93	58CV(A,X)070–12
CNPH*3617A**	0.99	0.91	58CV(A,X)070–12
CNPV*3014A**	0.99	0.91	58CV(A,X)070–12
CSPH*3012A**	0.99	0.91	58CV(A,X)070–12
CSPH*3612A**	0.99	0.91	58CV(A,X)070–12
CAP**3017A**	0.99	0.90	58CV(A,X)090–16
CAP**3617A**	1.00	0.90	58CV(A,X)090–16
CNPH*3017A**	0.99	0.91	58CV(A,X)090–16
CNPH*3117A**	1.01	0.93	58CV(A,X)090–16
CNPH*3617A**	0.99	0.91	58CV(A,X)090–16
CNPV*3017A**	0.99	0.91	58CV(A,X)090–16
CNPV*3117A**	1.01	0.93	58CV(A,X)090–16
CNPV*3617A**	0.99	0.91	58CV(A,X)090–16
CNPV*3717A**	1.02	0.94	58CV(A,X)090–16
CSPH*3012A**	1.00	0.92	58CV(A,X)090–16
CSPH*3612A**	1.00	0.90	58CV(A,X)090–16
CAP**3621A**	1.00	0.90	58CV(A,X)110–20
CNPH*3017A**	1.00	0.92	58CV(A,X)110–20
CNPH*3117A**	1.01	0.93	58CV(A,X)110–20
CNPH*3617A**	1.00	0.92	58CV(A,X)110–20
CNPV*3621A**	1.00	0.92	58CV(A,X)110–20
CSPH*3012A**	1.00	0.92	58CV(A,X)110–20
CSPH*3612A**	1.01	0.91	58CV(A,X)110–20
CNPH*3017A**	1.00	0.90	58CV(A,X)135–22
CNPH*3117A**	1.01	0.93	58CV(A,X)135–22
CNPH*3617A**	1.00	0.90	58CV(A,X)135–22
CSPH*3012A**	1.00	0.90	58CV(A,X)135–22
CSPH*3612A**	1.01	0.91	58CV(A,X)135–22
CNPH*3017A**	1.00	0.90	58CV(A,X)155–22
CNPH*3117A**	1.01	0.93	58CV(A,X)155–22
CNPH*3617A**	1.00	0.90	58CV(A,X)155–22
CSPH*3012A**	1.00	0.90	58CV(A,X)155–22
CSPH*3612A**	1.01	0.91	58CV(A,X)155–22

Cooling Indoor Model	Capacity	Power	Furnace Model
CAP**3619A**	1.00	0.96	58HDV040––12
CNPH*3017A**	0.99	0.94	58HDV040––12
CNPH*3117A**	1.01	0.97	58HDV040––12
CNPH*3617A**	0.99	0.94	58HDV040––12
CNPV*3017A**	0.99	0.94	58HDV040––12
CNPV*3117A**	1.00	0.94	58HDV040––12
CNPV*3617A**	0.99	0.94	58HDV040––12
CNPV*3621A**	0.99	0.95	58HDV040––12
CNPV*3717A**	1.00	0.92	58HDV040––12
CSPH*3012A**	1.00	0.96	58HDV040––12
CSPH*3612A**	1.02	0.98	58HDV040––12
CAP**3619A**	1.01	0.96	58HDV060––12
CNPH*3017A**	0.99	0.95	58HDV060––12
CNPH*3117A**	1.01	0.93	58HDV060––12
CNPH*3617A**	0.99	0.95	58HDV060––12
CNPV*3017A**	0.99	0.95	58HDV060––12
CNPV*3117A**	1.00	0.92	58HDV060––12
CNPV*3617A**	0.99	0.95	58HDV060––12
CNPV*3621A**	0.99	0.95	58HDV060––12
CNPV*3717A**	1.00	0.92	58HDV060––12
CSPH*3012A**	1.00	0.96	58HDV060––12
CSPH*3612A**	1.02	0.94	58HDV060––12
CAP**4823A**	1.03	0.94	58HDV080––20
CNPH*3017A**	1.00	0.92	58HDV080––20
CNPH*3117A**	1.01	0.93	58HDV080––20
CNPH*3617A**	1.00	0.92	58HDV080––20
CNPV*3621A**	1.00	0.92	58HDV080––20
CSPH*3012A**	1.00	0.96	58HDV080––20
CSPH*3612A**	1.02	0.94	58HDV080––20
CNPH*3017A**	1.00	0.92	58HDV100––20
CNPH*3117A**	1.01	0.93	58HDV100––20
CNPH*3617A**	1.00	0.92	58HDV100––20
CSPH*3012A**	1.00	0.96	58HDV100––20
CSPH*3612A**	1.02	0.94	58HDV100––20
CAP**3017A**	1.00	0.92	58ME(B,C)060–12
CAP**3617A**	1.00	0.92	58ME(B,C)060–12
CNPH*3017A**	1.00	0.92	58ME(B,C)060–12
CNPH*3617A**	1.00	0.92	58ME(B,C)060–12
CNPV*3017A**	1.00	0.92	58ME(B,C)060–12
CNPV*3617A**	1.00	0.92	58ME(B,C)060–12
CSPH*3012A**	1.00	0.92	58ME(B,C)060–12
CSPH*3612A**	1.00	0.92	58ME(B,C)060–12

DETAILED COOLING CAPACITIES# (CONT.)

24ABB330C30 Outdoor Section With CAP3014A** Indoor Section**

Cooling Indoor Model	Capacity	Power	Furnace Model
CAP**3017A**	1.00	0.92	58ME(B,C)080–12
CAP**3617A**	1.00	0.92	58ME(B,C)080–12
CNPH*3017A**	1.00	0.92	58ME(B,C)080–12
CNPH*3617A**	1.00	0.92	58ME(B,C)080–12
CNPV*3017A**	1.00	0.92	58ME(B,C)080–12
CNPV*3617A**	1.00	0.92	58ME(B,C)080–12
CSPH*3012A**	1.00	0.92	58ME(B,C)080–12
CSPH*3612A**	1.00	0.92	58ME(B,C)080–12
CAP**3017A**	1.00	0.92	58ME(B,C)080–16
CAP**3617A**	1.00	0.92	58ME(B,C)080–16
CNPH*3017A**	1.00	0.92	58ME(B,C)080–16
CNPH*3617A**	1.00	0.92	58ME(B,C)080–16
CNPV*3017A**	1.00	0.92	58ME(B,C)080–16
CNPV*3617A**	1.00	0.92	58ME(B,C)080–16
CSPH*3012A**	1.00	0.92	58ME(B,C)080–16
CSPH*3612A**	1.00	0.92	58ME(B,C)080–16
CAP**3017A**	1.00	0.92	58MEB040–12
CAP**3017A**	1.00	0.92	58MEB040–12
CAP**3617A**	1.00	0.92	58MEB040–12
CAP**3617A**	1.00	0.92	58MEB040–12
CNPH*3017A**	1.00	0.92	58MEB040–12
CNPH*3017A**	1.00	0.92	58MEB040–12
CNPH*3117A**	1.01	0.93	58MEB040–12
CNPH*3617A**	1.00	0.92	58MEB040–12
CNPH*3617A**	1.00	0.92	58MEB040–12
CNPV*3017A**	1.00	0.92	58MEB040–12
CNPV*3017A**	1.00	0.92	58MEB040–12
CNPV*3117A**	1.01	0.93	58MEB040–12
CNPV*3617A**	1.00	0.92	58MEB040–12
CNPV*3617A**	1.00	0.92	58MEB040–12
CNPV*3717A**	1.02	0.94	58MEB040–12
CSPH*3012A**	1.00	0.92	58MEB040–12
CSPH*3012A**	1.00	0.92	58MEB040–12
CSPH*3612A**	1.00	0.92	58MEB040–12
CSPH*3612A**	1.00	0.92	58MEB040–12
CNPH*3117A**	1.01	0.93	58MEC060–12
CNPH*3117A**	1.03	0.93	58MEC060–12
CNPV*3117A**	1.01	0.93	58MEC060–12
CNPV*3117A**	1.03	0.93	58MEC060–12
CNPV*3717A**	1.02	0.94	58MEC060–12
CNPV*3717A**	1.04	0.92	58MEC060–12
CNPH*3117A**	1.01	0.93	58MEC080–12
CNPH*3117A**	1.01	0.93	58MEC080–12
CNPV*3117A**	1.01	0.93	58MEC080–12
CNPV*3117A**	1.01	0.93	58MEC080–12
CNPV*3717A**	1.02	0.94	58MEC080–12
CNPV*3717A**	1.02	0.94	58MEC080–12
CNPH*3117A**	1.01	0.93	58MEC080–16
CNPH*3117A**	1.01	0.93	58MEC080–16
CNPV*3117A**	1.01	0.93	58MEC080–16
CNPV*3117A**	1.01	0.93	58MEC080–16
CNPV*3717A**	1.02	0.94	58MEC080–16
CNPV*3717A**	1.02	0.94	58MEC080–16
CNPH*3017A**	0.99	0.91	58MV(B,C)040–14
CNPH*3617A**	0.99	0.91	58MV(B,C)040–14
CSPH*3012A**	0.99	0.91	58MV(B,C)040–14
CSPH*3612A**	1.01	0.91	58MV(B,C)040–14
CAP**3017A**	1.00	0.92	58MV(B,C)060–14
CAP**3617A**	1.00	0.90	58MV(B,C)060–14

Cooling Indoor Model	Capacity	Power	Furnace Model
CNPH*3017A**	1.00	0.92	58MV(B,C)060–14
CNPH*3117A**	1.01	0.93	58MV(B,C)060–14
CNPH*3617A**	1.00	0.92	58MV(B,C)060–14
CNPV*3017A**	1.00	0.92	58MV(B,C)060–14
CNPV*3117A**	1.01	0.93	58MV(B,C)060–14
CNPV*3617A**	1.00	0.92	58MV(B,C)060–14
CNPV*3717A**	1.02	0.94	58MV(B,C)060–14
CSPH*3012A**	1.00	0.92	58MV(B,C)060–14
CSPH*3612A**	1.00	0.90	58MV(B,C)060–14
CAP**3621A**	0.99	0.91	58MV(B,C)080–14
CNPH*3017A**	0.99	0.91	58MV(B,C)080–14
CNPH*3117A**	1.01	0.93	58MV(B,C)080–14
CNPH*3617A**	0.99	0.91	58MV(B,C)080–14
CNPV*3621A**	0.99	0.91	58MV(B,C)080–14
CSPH*3012A**	0.99	0.91	58MV(B,C)080–14
CSPH*3612A**	1.01	0.91	58MV(B,C)080–14
CAP**3621A**	1.00	0.90	58MV(B,C)080–20
CNPH*3017A**	0.99	0.91	58MV(B,C)080–20
CNPH*3117A**	1.01	0.93	58MV(B,C)080–20
CNPH*3617A**	0.99	0.91	58MV(B,C)080–20
CNPV*3621A**	0.99	0.91	58MV(B,C)080–20
CSPH*3012A**	1.00	0.92	58MV(B,C)080–20
CSPH*3612A**	1.01	0.91	58MV(B,C)080–20
CAP**3621A**	0.99	0.91	58MV(B,C)100–20
CNPH*3017A**	0.99	0.90	58MV(B,C)100–20
CNPH*3117A**	1.01	0.92	58MV(B,C)100–20
CNPH*3617A**	0.99	0.90	58MV(B,C)100–20
CNPV*3621A**	0.99	0.90	58MV(B,C)100–20
CSPH*3012A**	0.99	0.91	58MV(B,C)100–20
CSPH*3612A**	1.01	0.91	58MV(B,C)100–20
CNPH*3017A**	1.00	0.90	58MV(B,C)120–20
CNPH*3117A**	1.01	0.93	58MV(B,C)120–20
CNPH*3617A**	1.00	0.90	58MV(B,C)120–20
CSPH*3012A**	1.00	0.90	58MV(B,C)120–20
CSPH*3612A**	1.01	0.91	58MV(B,C)120–20
CNPH*3117A**	1.01	0.93	58MVB040–14
CAP**3017A**	1.00	0.92	58PH*070–16
CAP**3617A**	1.01	0.92	58PH*070–16
CNPH*3017A**	1.00	0.92	58PH*070–16
CNPH*3117A**	1.01	0.97	58PH*070–16
CNPH*3617A**	1.00	0.92	58PH*070–16
CNPV*3017A**	1.00	0.92	58PH*070–16
CNPV*3117A**	1.01	0.93	58PH*070–16
CNPV*3617A**	1.00	0.92	58PH*070–16
CNPV*3717A**	1.02	0.94	58PH*070–16
CSPH*3012A**	1.00	0.92	58PH*070–16
CSPH*3612A**	1.02	0.94	58PH*070–16
CAP**3621A**	1.01	0.91	58PH*090–16
CNPH*3017A**	1.00	0.92	58PH*090–16
CNPH*3117A**	1.01	0.93	58PH*090–16
CNPH*3617A**	1.00	0.92	58PH*090–16
CNPV*3621A**	1.00	0.92	58PH*090–16
CSPH*3012A**	1.00	0.92	58PH*090–16
CSPH*3612A**	1.03	0.93	58PH*090–16
CAP**3017A**	1.00	0.92	58UVB060–14
CAP**3017A**	1.00	0.92	58UVB060–14
CAP**3017A**	1.00	0.92	58UVB060–14
CAP**3617A**	1.00	0.90	58UVB060–14
CAP**3617A**	1.00	0.90	58UVB060–14

Cooling Indoor Model	Capacity	Power	Furnace Model
CAP**3617A**	1.00	0.90	58UVB060–14
CNPV*3017A**	1.00	0.92	58UVB060–14
CNPV*3017A**	1.00	0.92	58UVB060–14
CNPV*3017A**	1.00	0.92	58UVB060–14
CNPV*3117A**	1.01	0.93	58UVB060–14
CNPV*3117A**	1.01	0.93	58UVB060–14
CNPV*3117A**	1.01	0.93	58UVB060–14
CNPV*3617A**	1.00	0.92	58UVB060–14
CNPV*3617A**	1.00	0.92	58UVB060–14
CNPV*3617A**	1.00	0.92	58UVB060–14
CNPV*3717A**	1.02	0.94	58UVB060–14
CNPV*3717A**	1.02	0.94	58UVB060–14
CNPV*3717A**	1.02	0.94	58UVB060–14
CAP**3621A**	0.99	0.91	58UVB080–14
CAP**3621A**	0.99	0.91	58UVB080–14
CAP**3621A**	0.99	0.91	58UVB080–14
CNPV*3621A**	0.99	0.91	58UVB080–14
CNPV*3621A**	0.99	0.91	58UVB080–14
CNPV*3621A**	0.99	0.91	58UVB080–14
CAP**3621A**	1.00	0.90	58UVB080–20
CAP**3621A**	1.00	0.90	58UVB080–20
CAP**3621A**	1.00	0.90	58UVB080–20
CNPV*3621A**	0.99	0.91	58UVB080–20
CNPV*3621A**	0.99	0.91	58UVB080–20
CNPV*3621A**	0.99	0.91	58UVB080–20
CAP**3621A**	0.99	0.91	58UVB100–20
CAP**3621A**	0.99	0.91	58UVB100–20
CAP**3621A**	0.99	0.91	58UVB100–20
CNPV*3621A**	0.99	0.90	58UVB100–20
CNPV*3621A**	0.99	0.90	58UVB100–20
CNPV*3621A**	0.99	0.90	58UVB100–20
CAP**3017A**	0.99	0.91	58VLR105–12
CAP**3617A**	1.00	0.92	58VLR105–12
CNPH*3017A**	0.99	0.91	58VLR105–12
CNPH*3117A**	1.00	0.92	58VLR105–12
CNPH*3617A**	0.99	0.91	58VLR105–12
CNPV*3017A**	0.99	0.91	58VLR105–12
CNPV*3117A**	1.00	0.92	58VLR105–12
CNPV*3617A**	0.99	0.91	58VLR105–12
CNPV*3717A**	1.00	0.92	58VLR105–12
CSPH*3012A**	1.00	0.92	58VLR105–12
CSPH*3612A**	1.00	0.92	58VLR105–12
CAP**3017A**	0.98	0.90	58VMR105–12
CAP**3617A**	0.99	0.90	58VMR105–12
CNPH*3017A**	0.98	0.90	58VMR105–12
CNPH*3117A**	1.00	0.92	58VMR105–12
CNPH*3617A**	0.98	0.90	58VMR105–12
CNPV*3017A**	0.98	0.90	58VMR105–12
CNPV*3117A**	1.00	0.92	58VMR105–12
CNPV*3617A**	0.98	0.90	58VMR105–12
CNPV*3717A**	1.00	0.92	58VMR105–12
CSPH*3012A**	0.99	0.93	58VMR105–12
CSPH*3612A**	1.00	0.92	58VMR105–12
CAP**3017A**	0.99	0.92	59*N*A060V17**14
CAP**3617A**	0.99	0.92	59*N*A060V17**14
CAP**3619A**	0.99	0.92	59*N*A060V17**14
CAP**3621A**	0.99	0.93	59*N*A060V17**14
CNPH*3017A**	0.99	0.92	59*N*A060V17**14
CNPH*3117A**	1.01	0.92	59*N*A060V17**14

DETAILED COOLING CAPACITIES# (CONT.)

24ABB330C30 Outdoor Section With CAP3014A** Indoor Section**

Cooling Indoor Model	Capacity	Power	Furnace Model
CNPH*3617A**	0.99	0.92	59*N*A060V17**14
CNPV*3017A**	0.99	0.92	59*N*A060V17**14
CNPV*3117A**	1.01	0.92	59*N*A060V17**14
CNPV*3617A**	0.99	0.92	59*N*A060V17**14
CNPV*3621A**	0.99	0.92	59*N*A060V17**14
CNPV*3717A**	1.02	0.94	59*N*A060V17**14
CSPH*3012A**	0.99	0.95	59*N*A060V17**14
CSPH*3612A**	1.01	0.92	59*N*A060V17**14
CAP**3017A**	0.99	0.93	59*N*A080V17**14
CAP**3617A**	0.99	0.93	59*N*A080V17**14
CAP**3619A**	0.99	0.93	59*N*A080V17**14
CAP**3621A**	0.99	0.91	59*N*A080V17**14
CNPH*3017A**	0.99	0.93	59*N*A080V17**14
CNPH*3117A**	1.01	0.93	59*N*A080V17**14
CNPH*3617A**	0.99	0.93	59*N*A080V17**14
CNPV*3017A**	0.99	0.93	59*N*A080V17**14
CNPV*3117A**	1.01	0.93	59*N*A080V17**14
CNPV*3617A**	0.99	0.93	59*N*A080V17**14
CNPV*3621A**	0.99	0.93	59*N*A080V17**14
CNPV*3717A**	1.03	0.94	59*N*A080V17**14
CSPH*3012A**	0.99	0.93	59*N*A080V17**14
CSPH*3612A**	1.01	0.93	59*N*A080V17**14
CAP**3619A**	1.00	0.92	59*N*A100V21**20
CAP**3621A**	1.00	0.92	59*N*A100V21**20
CNPH*3017A**	0.99	0.93	59*N*A100V21**20
CNPH*3117A**	1.02	0.94	59*N*A100V21**20
CNPH*3617A**	0.99	0.93	59*N*A100V21**20
CNPV*3621A**	1.00	0.93	59*N*A100V21**20
CSPH*3012A**	1.00	0.93	59*N*A100V21**20
CSPH*3612A**	1.02	0.94	59*N*A100V21**20
CNPH*3017A**	0.99	0.91	59*N*A120V24**22
CNPH*3117A**	1.02	0.94	59*N*A120V24**22
CNPH*3617A**	0.99	0.91	59*N*A120V24**22
CSPH*3012A**	1.00	0.92	59*N*A120V24**22
CSPH*3612A**	1.01	0.93	59*N*A120V24**22
CAP**3017A**	0.99	0.93	59*P5A060E17**14
CAP**3617A**	1.00	0.93	59*P5A060E17**14
CAP**3619A**	1.00	0.93	59*P5A060E17**14
CAP**3621A**	1.00	0.93	59*P5A060E17**14
CNPH*3017A**	0.99	0.93	59*P5A060E17**14
CNPH*3117A**	1.02	0.94	59*P5A060E17**14
CNPH*3617A**	0.99	0.93	59*P5A060E17**14
CNPV*3017A**	0.99	0.93	59*P5A060E17**14
CNPV*3117A**	1.02	0.94	59*P5A060E17**14
CNPV*3617A**	0.99	0.93	59*P5A060E17**14
CNPV*3621A**	0.99	0.93	59*P5A060E17**14
CNPV*3717A**	1.03	0.95	59*P5A060E17**14
CSPH*3012A**	0.99	0.93	59*P5A060E17**14
CSPH*3612A**	1.01	0.93	59*P5A060E17**14
CAP**3017A**	1.00	0.93	59*P5A080E17**16
CAP**3617A**	1.01	0.94	59*P5A080E17**16
CAP**3619A**	1.01	0.94	59*P5A080E17**16
CAP**3621A**	1.01	0.94	59*P5A080E17**16
CNPH*3017A**	1.00	0.93	59*P5A080E17**16
CNPH*3117A**	1.03	0.94	59*P5A080E17**16
CNPH*3617A**	1.00	0.93	59*P5A080E17**16
CNPV*3017A**	1.00	0.93	59*P5A080E17**16
CNPV*3117A**	1.03	0.94	59*P5A080E17**16
CNPV*3617A**	1.00	0.93	59*P5A080E17**16

Cooling Indoor Model	Capacity	Power	Furnace Model
CNPV*3621A**	1.00	0.93	59*P5A080E17**16
CNPV*3717A**	1.04	0.95	59*P5A080E17**16
CSPH*3012A**	1.01	0.94	59*P5A080E17**16
CSPH*3612A**	1.03	0.94	59*P5A080E17**16
CAP**3017A**	0.99	0.93	OVLAAB036098
CAP**3617A**	0.99	0.93	OVLAAB036098
CNPH*3017A**	0.99	0.93	OVLAAB036098
CNPH*3117A**	1.00	0.92	OVLAAB036098
CNPH*3617A**	0.99	0.93	OVLAAB036098
CNPV*3017A**	0.99	0.93	OVLAAB036098
CNPV*3117A**	1.00	0.92	OVLAAB036098
CNPV*3617A**	0.99	0.93	OVLAAB036098
CNPV*3717A**	1.00	0.92	OVLAAB036098
CSPH*3012A**	0.99	0.93	OVLAAB036098
CSPH*3612A**	1.00	0.92	OVLAAB036098
CAP**3621A**	1.00	0.92	OVLAAB048112
CNPH*3017A**	1.00	0.94	OVLAAB048112
CNPH*3117A**	1.00	0.92	OVLAAB048112
CNPH*3617A**	1.00	0.94	OVLAAB048112
CNPV*3621A**	1.00	0.94	OVLAAB048112
CSPH*3012A**	1.00	0.94	OVLAAB048112
CSPH*3612A**	1.00	0.92	OVLAAB048112
CAP**3017A**	0.99	0.95	OVMAAB036098
CAP**3617A**	0.99	0.93	OVMAAB036098
CNPH*3017A**	0.99	0.95	OVMAAB036098
CNPH*3117A**	1.00	0.92	OVMAAB036098
CNPH*3617A**	0.99	0.95	OVMAAB036098
CNPV*3017A**	0.99	0.95	OVMAAB036098
CNPV*3117A**	1.00	0.92	OVMAAB036098
CNPV*3617A**	0.99	0.95	OVMAAB036098
CNPV*3717A**	1.00	0.92	OVMAAB036098
CSPH*3012A**	0.99	0.95	OVMAAB036098
CSPH*3612A**	1.00	0.92	OVMAAB036098
CAP**3017A**	0.99	0.91	OVMAAB042112
CAP**3617A**	1.00	0.92	OVMAAB042112
CNPH*3017A**	0.99	0.91	OVMAAB042112
CNPH*3117A**	1.00	0.92	OVMAAB042112
CNPH*3617A**	0.99	0.91	OVMAAB042112
CNPV*3017A**	0.99	0.91	OVMAAB042112
CNPV*3117A**	1.00	0.92	OVMAAB042112
CNPV*3617A**	0.99	0.91	OVMAAB042112
CNPV*3717A**	1.00	0.92	OVMAAB042112
CSPH*3012A**	1.00	0.92	OVMAAB042112
CSPH*3612A**	1.00	0.92	OVMAAB042112

See notes on pg. 53

DETAILED COOLING CAPACITIES# (CONT.)

EVAPORATOR AIR		CONDENSER ENTERING AIR TEMPERATURES °F (°C)																	
		75 (23.9)			85 (29.4)			95 (35)			105 (40.6)			115 (46.1)			125 (51.7)		
CFM	EWB °F (°C)	Capacity MBtuh		Total System KW**	Capacity MBtuh		Total System KW**	Capacity MBtuh		Total System KW**	Capacity MBtuh		Total System KW**	Capacity MBtuh		Total System KW**	Capacity MBtuh		Total System KW**
		Total	Sens‡		Total	Sens‡		Total	Sens‡		Total	Sens‡		Total	Sens‡		Total	Sens‡	
24ABB336C30 Outdoor Section With CAP**3617A** Indoor Section																			
1050	72 (22.2)	40.76	20.75	2.59	38.98	20.09	2.87	37.11	19.41	3.17	35.12	18.68	3.51	32.94	17.90	3.88	30.52	17.04	4.27
	67 (19.4)	37.32	25.53	2.57	35.68	24.85	2.85	33.93	24.15	3.16	32.08	23.40	3.49	30.07	22.61	3.86	27.85	21.75	4.25
	62 (16.7)	34.25	30.28	2.56	32.76	29.59	2.83	31.19	28.85	3.14	29.56	28.05	3.47	27.92	27.92	3.84	26.21	26.21	4.23
	57 (13.9)	33.35	33.35	2.55	32.13	32.13	2.83	30.83	30.83	3.14	29.44	29.44	3.47	27.92	27.92	3.84	26.22	26.22	4.23
1200	72 (22.2)	41.38	21.69	2.65	39.54	21.01	2.93	37.60	20.32	3.23	35.53	19.58	3.57	33.28	18.79	3.94	30.79	17.92	4.33
	67 (19.4)	37.92	27.04	2.63	36.21	26.36	2.91	34.40	25.64	3.21	32.49	24.90	3.55	30.42	24.09	3.92	28.14	23.21	4.31
	62 (16.7)	34.98	32.38	2.62	33.47	31.64	2.89	31.90	31.90	3.20	30.47	30.47	3.54	28.85	28.85	3.90	27.03	27.03	4.30
	57 (13.9)	34.63	34.63	2.62	33.33	33.33	2.89	31.95	31.95	3.20	30.47	30.47	3.54	28.85	28.85	3.90	27.04	27.04	4.30
1350	72 (22.2)	41.84	22.56	2.71	39.94	21.88	2.99	37.95	21.17	3.29	35.82	20.42	3.63	33.52	19.62	4.00	30.96	18.73	4.39
	67 (19.4)	38.36	28.48	2.69	36.59	27.79	2.97	34.75	27.08	3.27	32.79	26.32	3.61	30.68	25.50	3.98	28.36	24.59	4.37
	62 (16.7)	35.68	35.40	2.68	34.30	34.30	2.96	32.85	32.85	3.26	31.29	31.29	3.60	29.59	29.59	3.97	27.68	27.68	4.36
	57 (13.9)	35.67	35.67	2.68	34.31	34.31	2.96	32.85	32.85	3.26	31.29	31.29	3.60	29.59	29.59	3.97	27.68	27.68	4.36

Cooling Indoor Model	Capacity	Power	Furnace Model
*CAP**3617A**	1.00	1.00	
CAP**3614A**	0.99	0.99	
CAP**3619A**	0.99	0.98	
CAP**3621A**	1.00	1.00	
CAP**4221A**	1.01	1.01	
CAP**4224A**	1.01	0.99	
CAP**4823A**	1.02	1.00	
CNPF*3618A**	0.99	0.99	
CNPH*3617A**	0.99	0.99	
CNPH*4221A**	1.01	0.99	
CNPH*4321A**	1.02	1.00	
CNPV*3617A**	0.99	0.99	
CNPV*3621A**	0.99	0.99	
CNPV*3717A**	1.02	0.99	
CNPV*4217A**	1.00	0.97	
CNPV*4221A**	1.01	0.99	
CNPV*4324A**	1.02	1.00	
CSPH*3612A**	1.02	1.00	
CSPH*4212A**	1.03	1.00	
FB4CNF036	0.98	0.96	
FB4CNF036	0.98	0.96	
FB4CNF042	0.99	0.96	
FB4CNF042	0.99	0.96	
FE4AN(B,F)003	1.00	0.89	
FE4AN(B,F)005	1.03	0.91	
FE4ANB006	1.05	0.90	
FE4ANF002	0.97	0.90	
FE5ANB004	1.04	0.89	
FF1ENP036	0.99	0.97	
FF1ENP037	0.99	0.91	
FV4BN(B,F)003	1.00	0.89	
FV4BN(B,F)005	1.03	0.91	
FV4BNB006	1.05	0.90	
FV4BNF002	0.97	0.90	
FV4CN(B,F)003	1.00	0.89	
FV4CN(B,F)005	1.03	0.91	
FV4CNB006	1.05	0.90	
FV4CNF002	0.97	0.90	
FX4CN(B,F)036	1.01	0.94	
FX4CN(B,F)042	1.03	0.94	
FX4DN(B,F)037	1.02	0.95	
FX4DN(B,F)043	1.02	0.95	
FX4DN(B,F)049	1.03	0.92	

Cooling Indoor Model	Capacity	Power	Furnace Model
FY4ANF036	0.99	0.99	
FY4ANF042	1.02	1.02	
FY5BNF036	0.99	0.96	
FY5BNF036	0.99	0.96	
FY5BNF042	0.99	0.96	
FY5BNF042	0.99	0.96	
CAP**3614A**	0.99	0.92	58CV(A,X)070–12
CNPH*3617A**	0.98	0.93	58CV(A,X)070–12
CNPH*4221A**	0.99	0.93	58CV(A,X)070–12
CNPH*4321A**	1.02	0.91	58CV(A,X)070–12
CSPH*3612A**	1.01	0.94	58CV(A,X)070–12
CSPH*4212A**	1.01	0.93	58CV(A,X)070–12
CAP**3617A**	0.99	0.90	58CV(A,X)090–16
CNPH*3617A**	0.99	0.92	58CV(A,X)090–16
CNPH*4221A**	1.00	0.91	58CV(A,X)090–16
CNPH*4321A**	1.02	0.91	58CV(A,X)090–16
CNPV*3617A**	0.99	0.92	58CV(A,X)090–16
CNPV*3717A**	1.02	0.91	58CV(A,X)090–16
CNPV*4217A**	1.00	0.91	58CV(A,X)090–16
CSPH*3612A**	1.01	0.93	58CV(A,X)090–16
CSPH*4212A**	1.02	0.93	58CV(A,X)090–16
CAP**3621A**	0.99	0.91	58CV(A,X)110–20
CAP**4221A**	1.00	0.91	58CV(A,X)110–20
CNPH*3617A**	0.99	0.92	58CV(A,X)110–20
CNPH*4221A**	1.00	0.91	58CV(A,X)110–20
CNPH*4321A**	1.02	0.91	58CV(A,X)110–20
CNPV*3621A**	0.99	0.92	58CV(A,X)110–20
CNPV*4221A**	1.00	0.91	58CV(A,X)110–20
CSPH*3612A**	1.01	0.93	58CV(A,X)110–20
CSPH*4212A**	1.02	0.93	58CV(A,X)110–20
CAP**4224A**	1.00	0.91	58CV(A,X)135–22
CNPH*3617A**	0.99	0.92	58CV(A,X)135–22
CNPH*4221A**	1.00	0.91	58CV(A,X)135–22
CNPH*4321A**	1.02	0.91	58CV(A,X)135–22
CNPV*4324A**	1.02	0.91	58CV(A,X)135–22
CSPH*3612A**	1.01	0.93	58CV(A,X)135–22
CSPH*4212A**	1.02	0.91	58CV(A,X)135–22
CAP**4224A**	1.01	0.90	58CV(A,X)155–22
CNPH*3617A**	0.99	0.92	58CV(A,X)155–22
CNPH*4221A**	1.01	0.92	58CV(A,X)155–22
CNPH*4321A**	1.02	0.91	58CV(A,X)155–22
CNPV*4324A**	1.02	0.91	58CV(A,X)155–22
CSPH*3612A**	1.02	0.91	58CV(A,X)155–22

Cooling Indoor Model	Capacity	Power	Furnace Model
CSPH*4212A**	1.02	0.91	58CV(A,X)155–22
CAP**3619A**	0.98	0.96	58HDV040––12
CNPH*3617A**	0.98	0.95	58HDV040––12
CNPH*4221A**	0.99	0.96	58HDV040––12
CNPH*4321A**	1.02	1.00	58HDV040––12
CNPV*3617A**	0.98	0.95	58HDV040––12
CNPV*3621A**	0.98	0.95	58HDV040––12
CNPV*3717A**	1.02	0.99	58HDV040––12
CNPV*4217A**	1.00	0.97	58HDV040––12
CNPV*4221A**	0.99	0.96	58HDV040––12
CSPH*3612A**	1.01	0.98	58HDV040––12
CSPH*4212A**	1.01	0.98	58HDV040––12
CAP**3619A**	0.99	0.97	58HDV060––12
CNPH*3617A**	0.98	0.96	58HDV060––12
CNPH*4221A**	1.00	0.97	58HDV060––12
CNPH*4321A**	1.02	0.95	58HDV060––12
CNPV*3617A**	0.98	0.96	58HDV060––12
CNPV*3621A**	0.98	0.96	58HDV060––12
CNPV*3717A**	1.03	0.96	58HDV060––12
CNPV*4217A**	1.01	0.98	58HDV060––12
CNPV*4221A**	1.00	0.97	58HDV060––12
CSPH*3612A**	1.01	0.94	58HDV060––12
CSPH*4212A**	1.01	0.94	58HDV060––12
CAP**4823A**	1.02	0.95	58HDV080––20
CNPH*3617A**	0.99	0.97	58HDV080––20
CNPH*4221A**	1.01	0.94	58HDV080––20
CNPH*4321A**	1.02	0.95	58HDV080––20
CNPV*3621A**	0.99	0.97	58HDV080––20
CNPV*4221A**	1.01	0.94	58HDV080––20
CNPV*4324A**	1.05	0.93	58HDV080––20
CSPH*3612A**	1.01	0.94	58HDV080––20
CSPH*4212A**	1.01	0.94	58HDV080––20
CNPH*3617A**	0.99	0.96	58HDV100––20
CNPH*4221A**	1.01	0.92	58HDV100––20
CNPH*4321A**	1.02	0.95	58HDV100––20
CNPV*4324A**	1.04	0.93	58HDV100––20
CNPV*4324A**	1.04	0.93	58HDV100––20
CSPH*3612A**	1.01	0.94	58HDV100––20
CSPH*4212A**	1.01	0.90	58HDV100––20
CAP**3617A**	1.00	0.91	58ME(B,C)060–12
CNPH*3617A**	0.99	0.90	58ME(B,C)060–12
CNPH*4221A**	1.00	0.91	58ME(B,C)060–12
CNPV*3617A**	0.99	0.90	58ME(B,C)060–12

DETAILED COOLING CAPACITIES# (CONT.)

24ABB336C30 Outdoor Section With CAP3617A** Indoor Section**

Cooling Indoor Model	Capacity	Power	Furnace Model
CNPV*4217A**	1.00	0.91	58ME(B,C)060–12
CSPH*3612A**	1.00	0.91	58ME(B,C)060–12
CSPH*4212A**	1.00	0.91	58ME(B,C)060–12
CAP**3617A**	0.99	0.90	58ME(B,C)080–12
CNPH*3617A**	0.99	0.90	58ME(B,C)080–12
CNPH*4221A**	1.00	0.91	58ME(B,C)080–12
CNPV*3617A**	0.99	0.90	58ME(B,C)080–12
CNPV*4217A**	1.00	0.91	58ME(B,C)080–12
CSPH*3612A**	1.00	0.91	58ME(B,C)080–12
CSPH*4212A**	1.00	0.91	58ME(B,C)080–12
CAP**3617A**	1.00	0.91	58ME(B,C)080–16
CNPH*3617A**	0.99	0.90	58ME(B,C)080–16
CNPH*4221A**	1.00	0.91	58ME(B,C)080–16
CNPV*3617A**	0.99	0.90	58ME(B,C)080–16
CNPV*4217A**	1.00	0.91	58ME(B,C)080–16
CSPH*3612A**	1.00	0.91	58ME(B,C)080–16
CSPH*4212A**	1.00	0.89	58ME(B,C)080–16
CAP**3621A**	1.00	0.89	58ME(B,C)100–20
CAP**4221A**	1.00	0.89	58ME(B,C)100–20
CNPH*3617A**	0.99	0.90	58ME(B,C)100–20
CNPH*4221A**	1.00	0.89	58ME(B,C)100–20
CNPV*3621A**	0.99	0.90	58ME(B,C)100–20
CNPV*4221A**	1.00	0.89	58ME(B,C)100–20
CSPH*3612A**	1.00	0.91	58ME(B,C)100–20
CSPH*4212A**	1.00	0.89	58ME(B,C)100–20
CAP**3617A**	1.00	0.91	58MEB040–12
CAP**3617A**	1.00	0.91	58MEB040–12
CNPH*3617A**	0.99	0.90	58MEB040–12
CNPH*3617A**	0.99	0.90	58MEB040–12
CNPH*4221A**	1.00	0.91	58MEB040–12
CNPH*4221A**	1.00	0.91	58MEB040–12
CNPH*4321A**	1.02	0.91	58MEB040–12
CNPV*3617A**	0.99	0.90	58MEB040–12
CNPV*3617A**	0.99	0.90	58MEB040–12
CNPV*3717A**	1.02	0.91	58MEB040–12
CNPV*4217A**	1.00	0.91	58MEB040–12
CNPV*4217A**	1.00	0.91	58MEB040–12
CSPH*3612A**	1.00	0.89	58MEB040–12
CSPH*3612A**	1.00	0.89	58MEB040–12
CSPH*4212A**	1.00	0.91	58MEB040–12
CSPH*4212A**	1.00	0.91	58MEB040–12
CNPH*4321A**	1.02	0.91	58MEC060–12
CNPV*3717A**	1.02	0.91	58MEC060–12
CNPH*4321A**	1.02	0.91	58MEC080–12
CNPV*3717A**	1.02	0.91	58MEC080–12
CNPH*4321A**	1.02	0.91	58MEC080–16
CNPV*3717A**	1.02	0.91	58MEC080–16
CNPH*4321A**	1.02	0.91	58MEC100–20
CAP**4224A**	0.99	0.93	58MV(B,C)040–14
CNPH*3617A**	0.98	0.93	58MV(B,C)040–14
CNPH*4221A**	0.99	0.94	58MV(B,C)040–14
CSPH*3612A**	1.01	0.94	58MV(B,C)040–14
CSPH*4212A**	1.01	0.93	58MV(B,C)040–14
CAP**3617A**	0.99	0.91	58MV(B,C)060–14
CNPH*3617A**	0.99	0.94	58MV(B,C)060–14
CNPH*4221A**	1.01	0.94	58MV(B,C)060–14
CNPH*4321A**	1.02	0.91	58MV(B,C)060–14
CNPV*3617A**	0.99	0.94	58MV(B,C)060–14
CNPV*3717A**	1.02	0.91	58MV(B,C)060–14
CNPV*4217A**	1.00	0.91	58MV(B,C)060–14

Cooling Indoor Model	Capacity	Power	Furnace Model
CSPH*3612A**	1.02	0.93	58MV(B,C)060–14
CSPH*4212A**	1.02	0.94	58MV(B,C)060–14
CAP**3621A**	0.99	0.91	58MV(B,C)080–14
CAP**4221A**	1.00	0.91	58MV(B,C)080–14
CNPH*3617A**	0.99	0.94	58MV(B,C)080–14
CNPH*4221A**	1.00	0.93	58MV(B,C)080–14
CNPH*4321A**	1.02	0.91	58MV(B,C)080–14
CNPV*3621A**	0.99	0.94	58MV(B,C)080–14
CNPV*4221A**	1.00	0.93	58MV(B,C)080–14
CSPH*3612A**	1.01	0.94	58MV(B,C)080–14
CSPH*4212A**	1.02	0.93	58MV(B,C)080–14
CAP**3621A**	0.99	0.90	58MV(B,C)080–20
CAP**4221A**	1.00	0.91	58MV(B,C)080–20
CNPH*3617A**	0.99	0.94	58MV(B,C)080–20
CNPH*4221A**	1.00	0.93	58MV(B,C)080–20
CNPH*4321A**	1.02	0.91	58MV(B,C)080–20
CNPV*3621A**	0.99	0.94	58MV(B,C)080–20
CNPV*4221A**	1.00	0.93	58MV(B,C)080–20
CSPH*3612A**	1.01	0.93	58MV(B,C)080–20
CSPH*4212A**	1.02	0.93	58MV(B,C)080–20
CAP**3621A**	0.99	0.91	58MV(B,C)100–20
CAP**4221A**	1.00	0.91	58MV(B,C)100–20
CNPH*3617A**	0.99	0.94	58MV(B,C)100–20
CNPH*4221A**	1.00	0.93	58MV(B,C)100–20
CNPH*4321A**	1.02	0.91	58MV(B,C)100–20
CNPV*3621A**	0.99	0.93	58MV(B,C)100–20
CNPV*4221A**	1.00	0.93	58MV(B,C)100–20
CSPH*3612A**	1.02	0.93	58MV(B,C)100–20
CSPH*4212A**	1.02	0.94	58MV(B,C)100–20
CAP**4224A**	1.00	0.91	58MV(B,C)120–20
CNPH*3617A**	0.99	0.92	58MV(B,C)120–20
CNPH*4221A**	1.00	0.91	58MV(B,C)120–20
CNPH*4321A**	1.02	0.91	58MV(B,C)120–20
CNPV*4324A**	1.02	0.91	58MV(B,C)120–20
CSPH*3612A**	1.01	0.93	58MV(B,C)120–20
CSPH*4212A**	1.02	0.93	58MV(B,C)120–20
CNPH*4321A**	1.02	0.91	58MVB040–14
CNPV*4324A**	1.02	0.91	58MVB040–14
CNPH*4321A**	1.02	0.95	58PH*045–08
CAP**3617A**	0.99	0.93	58PH*070–16
CNPH*3617A**	0.99	0.94	58PH*070–16
CNPH*4221A**	1.00	0.95	58PH*070–16
CNPH*4321A**	1.02	0.95	58PH*070–16
CNPV*3617A**	0.99	0.94	58PH*070–16
CNPV*3717A**	1.02	0.95	58PH*070–16
CNPV*4217A**	1.00	0.91	58PH*070–16
CSPH*3612A**	1.01	0.94	58PH*070–16
CSPH*4212A**	1.02	0.95	58PH*070–16
CAP**3621A**	1.00	0.91	58PH*090–16
CAP**4221A**	1.01	0.93	58PH*090–16
CNPH*3617A**	0.99	0.93	58PH*090–16
CNPH*4221A**	1.01	0.92	58PH*090–16
CNPH*4321A**	1.02	0.91	58PH*090–16
CNPV*3621A**	0.99	0.93	58PH*090–16
CNPV*4221A**	1.01	0.92	58PH*090–16
CSPH*3612A**	1.02	0.93	58PH*090–16
CSPH*4212A**	1.03	0.92	58PH*090–16
CAP**3621A**	1.01	0.90	58PH*110–20
CAP**4221A**	1.01	0.93	58PH*110–20
CNPH*3617A**	0.99	0.93	58PH*110–20

Cooling Indoor Model	Capacity	Power	Furnace Model
CNPH*4221A**	1.01	0.93	58PH*110–20
CNPH*4321A**	1.02	0.91	58PH*110–20
CNPV*3621A**	1.00	0.91	58PH*110–20
CNPV*4221A**	1.01	0.93	58PH*110–20
CSPH*3612A**	1.02	0.91	58PH*110–20
CSPH*4212A**	1.03	0.92	58PH*110–20
CAP**4224A**	0.99	0.93	58UVB040–14
CAP**4224A**	0.99	0.93	58UVB040–14
CAP**3617A**	0.99	0.91	58UVB060–14
CAP**3617A**	0.99	0.91	58UVB060–14
CAP**3617A**	0.99	0.91	58UVB060–14
CNPV*3617A**	0.99	0.94	58UVB060–14
CNPV*3617A**	0.99	0.94	58UVB060–14
CNPV*3717A**	1.02	0.91	58UVB060–14
CNPV*3717A**	1.02	0.91	58UVB060–14
CNPV*3717A**	1.02	0.91	58UVB060–14
CNPV*4217A**	1.00	0.91	58UVB060–14
CNPV*4217A**	1.00	0.91	58UVB060–14
CNPV*4217A**	1.00	0.91	58UVB060–14
CAP**3621A**	0.99	0.91	58UVB080–14
CAP**3621A**	0.99	0.91	58UVB080–14
CAP**3621A**	0.99	0.91	58UVB080–14
CAP**4221A**	1.00	0.91	58UVB080–14
CAP**4221A**	1.00	0.91	58UVB080–14
CAP**4221A**	1.00	0.91	58UVB080–14
CNPV*3621A**	0.99	0.94	58UVB080–14
CNPV*3621A**	0.99	0.94	58UVB080–14
CNPV*4221A**	1.00	0.93	58UVB080–14
CNPV*4221A**	1.00	0.93	58UVB080–14
CAP**3621A**	0.99	0.90	58UVB080–20
CAP**3621A**	0.99	0.90	58UVB080–20
CAP**3621A**	0.99	0.90	58UVB080–20
CAP**4221A**	1.00	0.91	58UVB080–20
CAP**4221A**	1.00	0.91	58UVB080–20
CAP**4221A**	1.00	0.91	58UVB080–20
CNPV*3621A**	0.99	0.94	58UVB080–20
CNPV*3621A**	0.99	0.94	58UVB080–20
CNPV*4221A**	1.00	0.93	58UVB080–20
CNPV*4221A**	1.00	0.93	58UVB080–20
CAP**3621A**	0.99	0.91	58UVB100–20
CAP**3621A**	0.99	0.91	58UVB100–20
CAP**3621A**	0.99	0.91	58UVB100–20
CAP**4221A**	1.00	0.91	58UVB100–20
CAP**4221A**	1.00	0.91	58UVB100–20
CAP**4221A**	1.00	0.91	58UVB100–20
CNPV*3621A**	0.99	0.93	58UVB100–20
CNPV*3621A**	0.99	0.93	58UVB100–20
CNPV*4221A**	1.00	0.93	58UVB100–20
CNPV*4221A**	1.00	0.93	58UVB100–20
CAP**4224A**	1.00	0.91	58UVB120–20
CAP**4224A**	1.00	0.91	58UVB120–20
CNPV*4324A**	1.02	0.91	58UVB120–20
CNPV*4324A**	1.02	0.91	58UVB120–20
CAP**3617A**	0.99	0.92	58VLR105–12
CNPH*3617A**	0.98	0.96	58VLR105–12
CNPH*4321A**	1.03	0.94	58VLR105–12
CNPV*3617A**	0.98	0.96	58VLR105–12
CNPV*3717A**	1.03	0.94	58VLR105–12
CNPV*4217A**	1.01	0.94	58VLR105–12
CSPH*3612A**	1.01	0.93	58VLR105–12

DETAILED COOLING CAPACITIES# (CONT.)

24ABB336C30 Outdoor Section With CAP3617A** Indoor Section**

Cooling Indoor Model	Capacity	Power	Furnace Model
CSPH*4212A**	1.02	0.93	58VLR105–12
CAP**3621A**	0.99	0.90	58VLR120–20
CNPH*3617A**	0.98	0.90	58VLR120–20
CNPH*4221A**	0.99	0.91	58VLR120–20
CNPH*4321A**	1.02	0.91	58VLR120–20
CNPV*3621A**	0.98	0.90	58VLR120–20
CNPV*4221A**	0.99	0.91	58VLR120–20
CSPH*3612A**	1.01	0.90	58VLR120–20
CSPH*4212A**	1.01	0.90	58VLR120–20
CAP**3617A**	0.98	0.91	58VMR105–12
CNPH*3617A**	0.98	0.95	58VMR105–12
CNPH*4321A**	1.02	0.93	58VMR105–12
CNPV*3617A**	0.98	0.95	58VMR105–12
CNPV*3717A**	1.01	0.93	58VMR105–12
CNPV*4217A**	0.99	0.93	58VMR105–12
CSPH*3612A**	1.00	0.91	58VMR105–12
CSPH*4212A**	1.01	0.92	58VMR105–12
CAP**3621A**	0.98	0.90	58VMR120–20
CNPH*3617A**	0.98	0.95	58VMR120–20
CNPH*4221A**	0.99	0.91	58VMR120–20
CNPH*4321A**	1.02	0.91	58VMR120–20
CNPV*3621A**	0.98	0.91	58VMR120–20
CNPV*4221A**	0.99	0.91	58VMR120–20
CSPH*3612A**	1.01	0.92	58VMR120–20
CSPH*4212A**	1.01	0.93	58VMR120–20
CAP**3617A**	0.97	0.91	59*N*A060V17**14
CAP**3619A**	0.97	0.91	59*N*A060V17**14
CAP**3621A**	0.97	0.90	59*N*A060V17**14
CAP**4221A**	0.98	0.91	59*N*A060V17**14
CNPH*3617A**	0.97	0.92	59*N*A060V17**14
CNPH*4221A**	0.98	0.91	59*N*A060V17**14
CNPH*4321A**	1.01	0.90	59*N*A060V17**14
CNPV*3617A**	0.97	0.92	59*N*A060V17**14
CNPV*3621A**	0.97	0.91	59*N*A060V17**14
CNPV*3717A**	1.01	0.91	59*N*A060V17**14
CNPV*4217A**	0.99	0.92	59*N*A060V17**14
CNPV*4221A**	0.98	0.91	59*N*A060V17**14
CSPH*3612A**	0.99	0.91	59*N*A060V17**14
CSPH*4212A**	1.00	0.91	59*N*A060V17**14
CAP**3617A**	0.98	0.91	59*N*A080V17**14
CAP**3619A**	0.98	0.91	59*N*A080V17**14
CAP**3621A**	0.98	0.90	59*N*A080V17**14
CAP**4221A**	0.98	0.90	59*N*A080V17**14
CNPH*3617A**	0.97	0.90	59*N*A080V17**14
CNPH*4221A**	0.98	0.90	59*N*A080V17**14
CNPH*4321A**	1.01	0.90	59*N*A080V17**14
CNPV*3617A**	0.97	0.90	59*N*A080V17**14
CNPV*3621A**	0.98	0.91	59*N*A080V17**14
CNPV*3717A**	1.01	0.90	59*N*A080V17**14
CNPV*4217A**	0.99	0.91	59*N*A080V17**14
CNPV*4221A**	0.98	0.90	59*N*A080V17**14
CSPH*3612A**	1.00	0.91	59*N*A080V17**14
CSPH*4212A**	1.01	0.90	59*N*A080V17**14
CAP**3619A**	0.98	0.90	59*N*A100V21**20
CAP**3621A**	0.98	0.89	59*N*A100V21**20
CAP**4221A**	0.99	0.90	59*N*A100V21**20
CAP**4224A**	0.99	0.90	59*N*A100V21**20
CNPH*3617A**	0.98	0.91	59*N*A100V21**20
CNPH*4221A**	0.99	0.90	59*N*A100V21**20
CNPH*4321A**	1.02	0.91	59*N*A100V21**20

Cooling Indoor Model	Capacity	Power	Furnace Model
CNPV*3621A**	0.98	0.91	59*N*A100V21**20
CNPV*4221A**	0.99	0.90	59*N*A100V21**20
CNPV*4324A**	1.02	0.91	59*N*A100V21**20
CSPH*3612A**	1.00	0.90	59*N*A100V21**20
CSPH*4212A**	1.01	0.90	59*N*A100V21**20
CAP**4224A**	0.99	0.88	59*N*A120V24**22
CNPH*3617A**	0.98	0.89	59*N*A120V24**22
CNPH*4221A**	0.99	0.89	59*N*A120V24**22
CNPH*4321A**	1.02	0.91	59*N*A120V24**22
CNPV*4324A**	1.02	0.89	59*N*A120V24**22
CSPH*3612A**	1.00	0.89	59*N*A120V24**22
CSPH*4212A**	1.01	0.90	59*N*A120V24**22
CAP**3617A**	0.98	0.92	59*P5A060E17**14
CAP**3619A**	0.98	0.92	59*P5A060E17**14
CAP**3621A**	0.99	0.92	59*P5A060E17**14
CAP**4221A**	0.99	0.93	59*P5A060E17**14
CNPH*3617A**	0.98	0.92	59*P5A060E17**14
CNPH*4221A**	0.99	0.93	59*P5A060E17**14
CNPH*4321A**	1.02	0.93	59*P5A060E17**14
CNPV*3617A**	0.98	0.92	59*P5A060E17**14
CNPV*3621A**	0.98	0.92	59*P5A060E17**14
CNPV*3717A**	1.02	0.93	59*P5A060E17**14
CNPV*4217A**	1.00	0.93	59*P5A060E17**14
CNPV*4221A**	0.99	0.93	59*P5A060E17**14
CSPH*3612A**	1.01	0.92	59*P5A060E17**14
CSPH*4212A**	1.01	0.92	59*P5A060E17**14
CAP**3617A**	0.98	0.91	59*P5A080E17**16
CAP**3619A**	0.98	0.91	59*P5A080E17**16
CAP**3621A**	0.99	0.92	59*P5A080E17**16
CAP**4221A**	0.99	0.91	59*P5A080E17**16
CNPH*3617A**	0.98	0.92	59*P5A080E17**16
CNPH*4221A**	0.99	0.93	59*P5A080E17**16
CNPH*4321A**	1.02	0.91	59*P5A080E17**16
CNPV*3617A**	0.98	0.92	59*P5A080E17**16
CNPV*3621A**	0.98	0.91	59*P5A080E17**16
CNPV*3717A**	1.02	0.92	59*P5A080E17**16
CNPV*4217A**	1.00	0.91	59*P5A080E17**16
CNPV*4221A**	0.99	0.93	59*P5A080E17**16
CSPH*3612A**	1.01	0.92	59*P5A080E17**16
CSPH*4212A**	1.01	0.92	59*P5A080E17**16
CAP**3617A**	0.98	0.95	OVLAAB036098
CNPH*3617A**	0.98	0.95	OVLAAB036098
CNPH*4221A**	0.99	0.96	OVLAAB036098
CNPH*4321A**	1.02	0.93	OVLAAB036098
CNPV*3617A**	0.98	0.95	OVLAAB036098
CNPV*3717A**	1.02	0.95	OVLAAB036098
CNPV*4217A**	0.99	0.97	OVLAAB036098
CSPH*3612A**	1.00	0.97	OVLAAB036098
CSPH*4212A**	1.01	0.98	OVLAAB036098
CAP**3621A**	0.99	0.92	OVLAAB048112
CAP**4221A**	1.00	0.93	OVLAAB048112
CNPH*3617A**	0.99	0.96	OVLAAB048112
CNPH*4221A**	1.00	0.97	OVLAAB048112
CNPH*4321A**	1.03	0.94	OVLAAB048112
CNPV*3621A**	0.99	0.96	OVLAAB048112
CNPV*4221A**	1.00	0.97	OVLAAB048112
CNPV*4324A**	1.01	0.90	OVLAAB048112
CSPH*3612A**	1.01	0.98	OVLAAB048112
CSPH*4212A**	1.02	0.93	OVLAAB048112
CNPH*3617A**	1.01	0.98	OVLAAB060154

Cooling Indoor Model	Capacity	Power	Furnace Model
CNPH*4221A**	1.02	0.93	OVLAAB060154
CNPH*4321A**	1.05	0.94	OVLAAB060154
CNPV*4324A**	1.01	0.90	OVLAAB060154
CSPH*3612A**	1.03	0.95	OVLAAB060154
CSPH*4212A**	1.04	0.93	OVLAAB060154
CAP**3617A**	0.98	0.96	OVMAAB036098
CNPH*3617A**	0.98	0.95	OVMAAB036098
CNPH*4221A**	0.99	0.96	OVMAAB036098
CNPH*4321A**	1.02	0.93	OVMAAB036098
CNPV*3617A**	0.98	0.95	OVMAAB036098
CNPV*3717A**	1.02	0.95	OVMAAB036098
CNPV*4217A**	1.00	0.97	OVMAAB036098
CSPH*3612A**	1.01	0.98	OVMAAB036098
CSPH*4212A**	1.01	0.98	OVMAAB036098
CAP**3617A**	0.98	0.96	OVMAAB042112
CNPH*3617A**	0.98	0.96	OVMAAB042112
CNPH*4221A**	0.99	0.93	OVMAAB042112
CNPH*4321A**	1.02	0.94	OVMAAB042112
CNPV*3617A**	0.98	0.96	OVMAAB042112
CNPV*3717A**	1.02	0.94	OVMAAB042112
CNPV*4217A**	1.00	0.93	OVMAAB042112
CSPH*3612A**	1.01	0.92	OVMAAB042112
CSPH*4212A**	1.01	0.93	OVMAAB042112

See notes on pg. 53

DETAILED COOLING CAPACITIES# (CONT.)

EVAPORATOR AIR		CONDENSER ENTERING AIR TEMPERATURES °F (°C)																	
		75 (23.9)			85 (29.4)			95 (35)			105 (40.6)			115 (46.1)			125 (51.7)		
CFM	EWB °F (°C)	Capacity MBtuh		Total System KW**	Capacity MBtuh		Total System KW**	Capacity MBtuh		Total System KW**	Capacity MBtuh		Total System KW**	Capacity MBtuh		Total System KW**	Capacity MBtuh		Total System KW**
		Total	Sens‡		Total	Sens‡		Total	Sens‡		Total	Sens‡		Total	Sens‡		Total	Sens‡	
24ABB342C30 Outdoor Section With CAP**4221A** Indoor Section																			
1225	72 (22.2)	48.03	22.78	2.97	45.91	22.03	3.36	43.70	21.26	3.76	41.38	20.47	4.18	38.88	19.62	4.61	36.11	18.69	5.06
	67 (19.4)	43.90	27.84	3.03	41.94	27.08	3.41	39.90	26.29	3.80	37.77	25.49	4.20	35.48	24.63	4.62	32.97	23.71	5.05
	62 (16.7)	40.17	32.88	3.09	38.41	32.10	3.45	36.58	31.30	3.82	34.70	30.46	4.22	32.74	32.41	4.62	30.81	30.81	5.04
	57 (13.9)	38.87	38.87	3.10	37.45	37.45	3.46	35.96	35.96	3.83	34.39	34.39	4.22	32.70	32.70	4.62	30.81	30.81	5.04
1400	72 (22.2)	48.83	23.79	3.02	46.62	23.03	3.41	44.32	22.24	3.82	41.92	21.44	4.24	39.33	20.57	4.67	36.46	19.63	5.12
	67 (19.4)	44.67	29.46	3.08	42.62	28.69	3.46	40.50	27.89	3.86	38.28	27.07	4.27	35.92	26.21	4.69	33.33	25.27	5.12
	62 (16.7)	41.06	35.14	3.14	39.25	34.33	3.50	37.41	33.46	3.88	35.61	35.61	4.28	33.82	33.82	4.69	31.80	31.80	5.11
	57 (13.9)	40.44	40.44	3.14	38.91	38.91	3.51	37.32	37.32	3.88	35.64	35.64	4.28	33.82	33.82	4.69	31.80	31.80	5.11
1575	72 (22.2)	49.45	24.75	3.07	47.16	23.98	3.46	44.79	23.19	3.87	42.32	22.37	4.30	39.65	21.50	4.74	36.70	20.54	5.18
	67 (19.4)	45.26	31.04	3.14	43.15	30.25	3.52	40.96	29.45	3.91	38.69	28.63	4.33	36.27	27.75	4.75	33.61	26.79	5.18
	62 (16.7)	41.87	37.25	3.19	40.04	40.04	3.56	38.42	38.42	3.94	36.64	36.64	4.34	34.72	34.72	4.75	32.58	32.58	5.18
	57 (13.9)	41.72	41.72	3.19	40.11	40.11	3.55	38.42	38.42	3.94	36.65	36.65	4.34	34.73	34.73	4.75	32.59	32.59	5.18

Cooling Indoor Model	Capacity	Power	Furnace Model
*CAP**4221A**	1.00	1.00	
CAP**4224A**	1.00	1.00	
CAP**4817A**	1.00	0.98	
CAP**4821A**	1.02	1.01	
CAP**4823A**	1.01	0.98	
CAP**4824A**	1.02	1.01	
CAP**6025A**	1.04	0.99	
CNPF*4818A**	1.00	0.98	
CNPH*4221A**	1.00	1.00	
CNPH*4321A**	1.02	0.98	
CNPH*4821A**	1.02	1.01	
CNPV*4217A**	1.00	1.00	
CNPV*4221A**	1.00	1.00	
CNPV*4324A**	1.02	0.98	
CNPV*4821A**	1.02	1.01	
CNPV*4824A**	1.02	1.01	
CSPH*4212A**	1.00	1.00	
CSPH*4812A**	1.02	1.01	
FB4CNF042	0.99	0.94	
FB4CNF042	0.99	0.94	
FB4CNF048	0.99	0.94	
FB4CNF048	0.99	0.94	
FE4AN(B,F)003	1.00	0.94	
FE4AN(B,F)005	1.04	0.91	
FE4ANB006	1.04	0.89	
FE5ANB004	1.04	0.89	
FV4BN(B,F)003	1.00	0.94	
FV4BN(B,F)005	1.04	0.91	
FV4BNB006	1.04	0.89	
FV4CN(B,F)003	1.00	0.94	
FV4CN(B,F)005	1.04	0.91	
FV4CNB006	1.04	0.89	
FX4CN(B,F)042	1.02	0.96	
FX4CN(B,F)048	1.04	0.93	
FX4DN(B,F)043	1.01	0.93	
FX4DN(B,F)049	1.02	0.94	
FX4DN(B,F)061	1.04	0.91	
FY4ANF042	1.00	1.00	
FY4ANF048	1.04	1.02	
FY5BNF042	0.99	0.94	
FY5BNF042	0.99	0.94	
FY5BNF048	0.99	0.94	
FY5BNF048	0.99	0.94	

Cooling Indoor Model	Capacity	Power	Furnace Model
CNPH*4221A**	0.99	0.94	58CV(A,X)070–12
CNPH*4321A**	1.02	0.94	58CV(A,X)070–12
CNPH*4821A**	1.01	0.95	58CV(A,X)070–12
CSPH*4212A**	1.00	0.94	58CV(A,X)070–12
CSPH*4812A**	1.01	0.95	58CV(A,X)070–12
CAP**4817A**	1.02	0.94	58CV(A,X)090–16
CNPH*4221A**	1.00	0.94	58CV(A,X)090–16
CNPH*4321A**	1.02	0.94	58CV(A,X)090–16
CNPH*4821A**	1.01	0.92	58CV(A,X)090–16
CNPV*4217A**	1.00	0.95	58CV(A,X)090–16
CSPH*4212A**	1.00	0.91	58CV(A,X)090–16
CSPH*4812A**	1.01	0.92	58CV(A,X)090–16
CAP**4221A**	1.00	0.94	58CV(A,X)110–20
CAP**4821A**	1.01	0.92	58CV(A,X)110–20
CNPH*4221A**	0.99	0.93	58CV(A,X)110–20
CNPH*4321A**	1.02	0.94	58CV(A,X)110–20
CNPH*4821A**	1.01	0.92	58CV(A,X)110–20
CNPV*4221A**	0.99	0.93	58CV(A,X)110–20
CNPV*4821A**	1.01	0.92	58CV(A,X)110–20
CSPH*4212A**	1.00	0.94	58CV(A,X)110–20
CSPH*4812A**	1.01	0.92	58CV(A,X)110–20
CAP**4224A**	1.00	0.91	58CV(A,X)135–22
CAP**4824A**	1.01	0.91	58CV(A,X)135–22
CNPH*4221A**	1.00	0.94	58CV(A,X)135–22
CNPH*4321A**	1.02	0.98	58CV(A,X)135–22
CNPH*4821A**	1.01	0.91	58CV(A,X)135–22
CNPV*4324A**	1.02	0.90	58CV(A,X)135–22
CNPV*4824A**	1.01	0.91	58CV(A,X)135–22
CSPH*4212A**	1.00	0.90	58CV(A,X)135–22
CSPH*4812A**	1.01	0.91	58CV(A,X)135–22
CAP**4224A**	1.00	0.91	58CV(A,X)155–22
CAP**4824A**	1.01	0.91	58CV(A,X)155–22
CNPH*4221A**	1.00	0.94	58CV(A,X)155–22
CNPH*4321A**	1.02	0.90	58CV(A,X)155–22
CNPH*4821A**	1.01	0.91	58CV(A,X)155–22
CNPV*4324A**	1.02	0.90	58CV(A,X)155–22
CNPV*4824A**	1.01	0.91	58CV(A,X)155–22
CSPH*4212A**	1.00	0.90	58CV(A,X)155–22
CSPH*4812A**	1.01	0.91	58CV(A,X)155–22
CNPH*4221A**	0.99	0.98	58HDV060––12
CNPH*4321A**	1.02	0.98	58HDV060––12
CNPH*4821A**	1.01	0.99	58HDV060––12
CNPV*4217A**	1.00	0.98	58HDV060––12

Cooling Indoor Model	Capacity	Power	Furnace Model
CNPV*4221A**	0.99	0.98	58HDV060––12
CNPV*4821A**	1.01	0.97	58HDV060––12
CSPH*4212A**	1.02	0.98	58HDV060––12
CSPH*4812A**	1.04	0.99	58HDV060––12
CAP**4823A**	1.01	0.97	58HDV080––20
CNPH*4221A**	1.00	0.98	58HDV080––20
CNPH*4321A**	1.02	0.94	58HDV080––20
CNPH*4821A**	1.02	0.98	58HDV080––20
CNPV*4221A**	1.00	0.98	58HDV080––20
CNPV*4324A**	1.02	0.94	58HDV080––20
CNPV*4821A**	1.02	0.98	58HDV080––20
CNPV*4824A**	1.02	0.98	58HDV080––20
CSPH*4212A**	1.02	0.98	58HDV080––20
CSPH*4812A**	1.04	0.95	58HDV080––20
CAP**6025A**	1.04	0.95	58HDV100––20
CNPH*4221A**	1.00	0.95	58HDV100––20
CNPH*4821A**	1.01	0.97	58HDV100––20
CNPV*4324A**	1.02	0.94	58HDV100––20
CNPV*4324A**	1.02	0.94	58HDV100––20
CNPV*4824A**	1.01	0.97	58HDV100––20
CSPH*4212A**	1.02	0.94	58HDV100––20
CSPH*4812A**	1.04	0.95	58HDV100––20
CAP**4817A**	1.00	0.91	58ME(B,C)060–12
CNPH*4221A**	1.00	0.95	58ME(B,C)060–12
CNPH*4821A**	1.00	0.95	58ME(B,C)060–12
CNPV*4217A**	1.00	0.95	58ME(B,C)060–12
CSPH*4212A**	1.00	0.95	58ME(B,C)060–12
CSPH*4812A**	1.00	0.95	58ME(B,C)060–12
CAP**4817A**	1.00	0.91	58ME(B,C)080–12
CNPH*4221A**	1.00	0.95	58ME(B,C)080–12
CNPH*4821A**	1.00	0.91	58ME(B,C)080–12
CNPV*4217A**	1.00	0.95	58ME(B,C)080–12
CSPH*4212A**	1.00	0.95	58ME(B,C)080–12
CSPH*4812A**	1.00	0.95	58ME(B,C)080–12
CAP**4817A**	1.00	0.91	58ME(B,C)080–16
CNPH*4221A**	1.00	0.95	58ME(B,C)080–16
CNPH*4821A**	1.00	0.91	58ME(B,C)080–16
CNPV*4217A**	1.00	0.95	58ME(B,C)080–16
CSPH*4212A**	1.00	0.95	58ME(B,C)080–16
CSPH*4812A**	1.00	0.95	58ME(B,C)080–16
CAP**4221A**	1.00	0.91	58ME(B,C)100–20
CAP**4821A**	1.00	0.91	58ME(B,C)100–20
CNPH*4221A**	1.00	0.95	58ME(B,C)100–20

DETAILED COOLING CAPACITIES# (CONT.)

24ABB342C30 Outdoor Section With CAP4221A** Indoor Section**

Cooling Indoor Model	Capacity	Power	Furnace Model
CNPH*4821A**	1.00	0.91	58ME(B,C)100–20
CNPV*4221A**	1.00	0.95	58ME(B,C)100–20
CNPV*4821A**	1.00	0.95	58ME(B,C)100–20
CSPH*4212A**	1.00	0.95	58ME(B,C)100–20
CSPH*4812A**	1.00	0.95	58ME(B,C)100–20
CAP**4224A**	1.00	0.91	58ME(B,C)120–20
CAP**4824A**	1.00	0.91	58ME(B,C)120–20
CNPH*4221A**	1.00	0.95	58ME(B,C)120–20
CNPH*4821A**	1.00	0.91	58ME(B,C)120–20
CNPV*4824A**	1.00	0.95	58ME(B,C)120–20
CSPH*4212A**	1.00	0.95	58ME(B,C)120–20
CSPH*4812A**	1.00	0.95	58ME(B,C)120–20
CAP**4817A**	1.00	0.91	58MEB040–12
CAP**4817A**	1.00	0.91	58MEB040–12
CNPH*4221A**	1.00	0.95	58MEB040–12
CNPH*4221A**	1.00	0.95	58MEB040–12
CNPH*4321A**	1.02	0.94	58MEB040–12
CNPH*4821A**	1.00	0.91	58MEB040–12
CNPH*4821A**	1.00	0.92	58MEB040–12
CNPV*4217A**	1.00	0.95	58MEB040–12
CNPV*4217A**	1.00	0.95	58MEB040–12
CSPH*4212A**	1.00	0.91	58MEB040–12
CSPH*4212A**	1.00	0.92	58MEB040–12
CSPH*4812A**	1.00	0.95	58MEB040–12
CSPH*4812A**	1.00	0.95	58MEB040–12
CNPH*4321A**	1.02	0.94	58MEC060–12
CNPH*4321A**	1.04	0.96	58MEC060–12
CNPH*4321A**	1.02	0.94	58MEC080–12
CNPH*4321A**	1.02	0.94	58MEC080–12
CNPH*4321A**	1.02	0.94	58MEC080–16
CNPH*4321A**	1.02	0.94	58MEC080–16
CNPH*4321A**	1.02	0.94	58MEC100–20
CNPH*4321A**	1.04	0.95	58MEC100–20
CNPH*4321A**	1.02	0.94	58MEC120–20
CNPH*4321A**	1.04	0.93	58MEC120–20
CNPV*4324A**	1.02	0.90	58MEC120–20
CNPV*4324A**	1.04	0.93	58MEC120–20
CAP**4224A**	0.99	0.94	58MV(B,C)040–14
CAP**4824A**	1.00	0.94	58MV(B,C)040–14
CNPH*4221A**	0.99	0.94	58MV(B,C)040–14
CNPH*4821A**	1.01	0.95	58MV(B,C)040–14
CNPV*4824A**	1.00	0.94	58MV(B,C)040–14
CSPH*4212A**	1.00	0.94	58MV(B,C)040–14
CSPH*4812A**	1.01	0.95	58MV(B,C)040–14
CAP**4817A**	1.02	0.96	58MV(B,C)060–14
CNPH*4221A**	1.00	0.94	58MV(B,C)060–14
CNPH*4321A**	1.02	0.94	58MV(B,C)060–14
CNPH*4821A**	1.02	0.94	58MV(B,C)060–14
CNPV*4217A**	1.00	0.95	58MV(B,C)060–14
CSPH*4212A**	1.00	0.94	58MV(B,C)060–14
CSPH*4812A**	1.01	0.92	58MV(B,C)060–14
CAP**4221A**	0.99	0.94	58MV(B,C)080–14
CAP**4821A**	1.01	0.95	58MV(B,C)080–14
CNPH*4221A**	0.99	0.94	58MV(B,C)080–14
CNPH*4321A**	1.02	0.94	58MV(B,C)080–14
CNPH*4821A**	1.01	0.95	58MV(B,C)080–14
CNPV*4221A**	0.99	0.94	58MV(B,C)080–14
CNPV*4821A**	1.01	0.95	58MV(B,C)080–14
CSPH*4212A**	0.99	0.94	58MV(B,C)080–14
CSPH*4812A**	1.01	0.95	58MV(B,C)080–14

Cooling Indoor Model	Capacity	Power	Furnace Model
CAP**4221A**	1.00	0.95	58MV(B,C)080–20
CAP**4821A**	1.01	0.95	58MV(B,C)080–20
CNPH*4221A**	1.00	0.95	58MV(B,C)080–20
CNPH*4321A**	1.02	0.94	58MV(B,C)080–20
CNPH*4821A**	1.01	0.95	58MV(B,C)080–20
CNPV*4221A**	1.00	0.95	58MV(B,C)080–20
CNPV*4821A**	1.01	0.95	58MV(B,C)080–20
CSPH*4212A**	1.00	0.95	58MV(B,C)080–20
CSPH*4812A**	1.01	0.95	58MV(B,C)080–20
CAP**4221A**	0.99	0.93	58MV(B,C)100–20
CAP**4821A**	1.00	0.94	58MV(B,C)100–20
CNPH*4221A**	0.99	0.94	58MV(B,C)100–20
CNPH*4321A**	1.02	0.94	58MV(B,C)100–20
CNPH*4821A**	1.00	0.94	58MV(B,C)100–20
CNPV*4221A**	0.99	0.94	58MV(B,C)100–20
CNPV*4821A**	1.00	0.94	58MV(B,C)100–20
CSPH*4212A**	0.99	0.93	58MV(B,C)100–20
CSPH*4812A**	1.00	0.94	58MV(B,C)100–20
CAP**4224A**	1.00	0.94	58MV(B,C)120–20
CAP**4824A**	1.01	0.92	58MV(B,C)120–20
CNPH*4221A**	1.00	0.94	58MV(B,C)120–20
CNPH*4321A**	1.02	0.94	58MV(B,C)120–20
CNPH*4821A**	1.01	0.92	58MV(B,C)120–20
CNPV*4324A**	1.02	0.94	58MV(B,C)120–20
CNPV*4824A**	1.01	0.92	58MV(B,C)120–20
CSPH*4212A**	1.00	0.91	58MV(B,C)120–20
CSPH*4812A**	1.01	0.92	58MV(B,C)120–20
CNPH*4321A**	1.02	0.94	58MVB040–14
CNPV*4324A**	1.02	0.94	58MVB040–14
CAP**4817A**	1.02	0.98	58PH*070–16
CNPH*4221A**	1.00	0.98	58PH*070–16
CNPH*4321A**	1.02	0.98	58PH*070–16
CNPH*4821A**	1.01	0.97	58PH*070–16
CNPV*4217A**	1.00	0.98	58PH*070–16
CSPH*4212A**	1.00	0.98	58PH*070–16
CSPH*4812A**	1.01	0.97	58PH*070–16
CAP**4221A**	1.00	0.94	58PH*090–16
CAP**4821A**	1.01	0.92	58PH*090–16
CNPH*4221A**	1.00	0.94	58PH*090–16
CNPH*4321A**	1.02	0.94	58PH*090–16
CNPH*4821A**	1.01	0.92	58PH*090–16
CNPV*4221A**	1.00	0.94	58PH*090–16
CNPV*4821A**	1.01	0.92	58PH*090–16
CSPH*4212A**	1.00	0.94	58PH*090–16
CSPH*4812A**	1.01	0.92	58PH*090–16
CAP**4221A**	1.00	0.94	58PH*110–20
CAP**4821A**	1.02	0.94	58PH*110–20
CNPH*4221A**	1.00	0.94	58PH*110–20
CNPH*4321A**	1.02	0.94	58PH*110–20
CNPH*4821A**	1.02	0.94	58PH*110–20
CNPV*4221A**	1.00	0.94	58PH*110–20
CNPV*4821A**	1.02	0.94	58PH*110–20
CSPH*4212A**	1.00	0.94	58PH*110–20
CSPH*4812A**	1.02	0.94	58PH*110–20
CAP**4224A**	1.00	0.94	58PH*135–20
CAP**4824A**	1.02	0.94	58PH*135–20
CNPH*4221A**	1.00	0.94	58PH*135–20
CNPH*4321A**	1.02	0.94	58PH*135–20
CNPH*4821A**	1.02	0.94	58PH*135–20
CNPV*4324A**	1.02	0.94	58PH*135–20

Cooling Indoor Model	Capacity	Power	Furnace Model
CNPV*4824A**	1.02	0.94	58PH*135–20
CSPH*4212A**	1.00	0.94	58PH*135–20
CSPH*4812A**	1.02	0.94	58PH*135–20
CAP**4224A**	0.99	0.94	58UVB040–14
CAP**4224A**	0.99	0.94	58UVB040–14
CAP**4824A**	1.00	0.94	58UVB040–14
CAP**4824A**	1.00	0.94	58UVB040–14
CNPV*4824A**	1.01	0.95	58UVB040–14
CNPV*4824A**	1.01	0.95	58UVB040–14
CAP**4817A**	1.02	0.96	58UVB060–14
CAP**4817A**	1.02	0.96	58UVB060–14
CAP**4817A**	1.02	0.96	58UVB060–14
CNPV*4217A**	1.00	0.95	58UVB060–14
CNPV*4217A**	1.00	0.95	58UVB060–14
CNPV*4217A**	1.00	0.95	58UVB060–14
CAP**4221A**	0.99	0.94	58UVB080–14
CAP**4221A**	0.99	0.94	58UVB080–14
CAP**4221A**	0.99	0.94	58UVB080–14
CAP**4821A**	1.01	0.95	58UVB080–14
CAP**4821A**	1.01	0.95	58UVB080–14
CAP**4821A**	1.01	0.95	58UVB080–14
CNPV*4221A**	0.99	0.95	58UVB080–14
CNPV*4221A**	0.99	0.94	58UVB080–14
CNPV*4221A**	0.99	0.94	58UVB080–14
CNPV*4821A**	1.01	0.95	58UVB080–14
CNPV*4821A**	1.01	0.95	58UVB080–14
CNPV*4821A**	1.01	0.95	58UVB080–14
CAP**4221A**	1.00	0.95	58UVB080–20
CAP**4221A**	1.00	0.95	58UVB080–20
CAP**4221A**	1.00	0.95	58UVB080–20
CAP**4821A**	1.01	0.95	58UVB080–20
CAP**4821A**	1.01	0.95	58UVB080–20
CAP**4821A**	1.01	0.95	58UVB080–20
CNPV*4221A**	1.00	0.95	58UVB080–20
CNPV*4221A**	1.00	0.95	58UVB080–20
CNPV*4221A**	1.00	0.95	58UVB080–20
CNPV*4821A**	1.01	0.95	58UVB080–20
CNPV*4821A**	1.01	0.95	58UVB080–20
CNPV*4821A**	1.01	0.95	58UVB080–20
CAP**4221A**	0.99	0.93	58UVB100–20
CAP**4221A**	0.99	0.93	58UVB100–20
CAP**4221A**	0.99	0.93	58UVB100–20
CAP**4821A**	1.00	0.94	58UVB100–20
CAP**4821A**	1.00	0.94	58UVB100–20
CAP**4821A**	1.00	0.94	58UVB100–20
CNPV*4221A**	0.99	0.94	58UVB100–20
CNPV*4221A**	0.99	0.94	58UVB100–20
CNPV*4221A**	0.99	0.94	58UVB100–20
CNPV*4821A**	1.00	0.94	58UVB100–20
CNPV*4821A**	1.00	0.94	58UVB100–20
CNPV*4821A**	1.00	0.94	58UVB100–20
CAP**4224A**	1.00	0.94	58UVB120–20
CAP**4224A**	1.00	0.94	58UVB120–20
CAP**4224A**	1.00	0.94	58UVB120–20
CAP**4824A**	1.01	0.92	58UVB120–20
CAP**4824A**	1.01	0.92	58UVB120–20
CAP**4824A**	1.01	0.92	58UVB120–20
CNPV*4324A**	1.02	0.94	58UVB120–20
CNPV*4324A**	1.02	0.94	58UVB120–20
CNPV*4324A**	1.02	0.94	58UVB120–20

DETAILED COOLING CAPACITIES# (CONT.)

24ABB342C30 Outdoor Section With CAP4221A** Indoor Section**

Cooling Indoor Model	Capacity	Power	Furnace Model
CNPV*4824A**	1.01	0.92	58UVB120–20
CNPV*4824A**	1.01	0.92	58UVB120–20
CNPV*4824A**	1.01	0.92	58UVB120–20
CAP**4221A**	0.99	0.94	58VLR120–20
CAP**4821A**	1.01	0.97	58VLR120–20
CNPH*4221A**	0.99	0.94	58VLR120–20
CNPH*4321A**	1.02	0.94	58VLR120–20
CNPH*4821A**	1.01	0.92	58VLR120–20
CNPV*4221A**	0.99	0.94	58VLR120–20
CNPV*4821A**	1.01	0.92	58VLR120–20
CSPH*4212A**	1.01	0.92	58VLR120–20
CSPH*4812A**	1.01	0.97	58VLR120–20
CAP**4221A**	0.99	0.94	58VMR120–20
CAP**4821A**	1.00	0.95	58VMR120–20
CNPH*4221A**	0.99	0.94	58VMR120–20
CNPH*4321A**	1.02	0.94	58VMR120–20
CNPH*4821A**	1.01	0.97	58VMR120–20
CNPV*4221A**	0.99	0.94	58VMR120–20
CNPV*4821A**	1.01	0.97	58VMR120–20
CSPH*4212A**	1.01	0.97	58VMR120–20
CSPH*4812A**	1.01	0.97	58VMR120–20
CAP**4221A**	0.98	0.94	59*N*A060V17**14
CAP**4817A**	1.00	0.95	59*N*A060V17**14
CAP**4821A**	0.99	0.94	59*N*A060V17**14
CNPH*4221A**	0.98	0.94	59*N*A060V17**14
CNPH*4321A**	1.01	0.94	59*N*A060V17**14
CNPH*4821A**	1.00	0.94	59*N*A060V17**14
CNPV*4217A**	0.99	0.95	59*N*A060V17**14
CNPV*4221A**	0.98	0.94	59*N*A060V17**14
CNPV*4821A**	1.00	0.94	59*N*A060V17**14
CSPH*4212A**	1.00	0.95	59*N*A060V17**14
CSPH*4812A**	1.00	0.94	59*N*A060V17**14
CAP**4221A**	0.98	0.93	59*N*A080V17**14
CAP**4817A**	1.00	0.93	59*N*A080V17**14
CAP**4821A**	1.00	0.94	59*N*A080V17**14
CNPH*4221A**	0.98	0.93	59*N*A080V17**14
CNPH*4321A**	1.01	0.93	59*N*A080V17**14
CNPH*4821A**	1.00	0.93	59*N*A080V17**14
CNPV*4217A**	0.99	0.94	59*N*A080V17**14
CNPV*4221A**	0.98	0.93	59*N*A080V17**14
CNPV*4821A**	1.00	0.93	59*N*A080V17**14
CSPH*4212A**	1.00	0.93	59*N*A080V17**14
CSPH*4812A**	1.01	0.94	59*N*A080V17**14
CAP**4221A**	0.99	0.93	59*N*A100V21**20
CAP**4224A**	0.99	0.93	59*N*A100V21**20
CAP**4821A**	1.00	0.93	59*N*A100V21**20
CAP**4823A**	1.00	0.93	59*N*A100V21**20
CAP**4824A**	1.00	0.92	59*N*A100V21**20
CNPH*4221A**	0.99	0.93	59*N*A100V21**20
CNPH*4321A**	1.01	0.92	59*N*A100V21**20
CNPH*4821A**	1.00	0.92	59*N*A100V21**20
CNPV*4221A**	0.99	0.93	59*N*A100V21**20
CNPV*4324A**	1.01	0.92	59*N*A100V21**20
CNPV*4821A**	1.00	0.92	59*N*A100V21**20
CNPV*4824A**	1.00	0.92	59*N*A100V21**20
CSPH*4212A**	1.01	0.93	59*N*A100V21**20
CSPH*4812A**	1.01	0.93	59*N*A100V21**20
CAP**4224A**	0.99	0.92	59*N*A120V24**22
CAP**4823A**	1.00	0.92	59*N*A120V24**22
CAP**4824A**	1.00	0.91	59*N*A120V24**22

Cooling Indoor Model	Capacity	Power	Furnace Model
CNPH*4221A**	0.99	0.92	59*N*A120V24**22
CNPH*4321A**	1.01	0.91	59*N*A120V24**22
CNPH*4821A**	1.00	0.91	59*N*A120V24**22
CNPV*4324A**	1.01	0.90	59*N*A120V24**22
CNPV*4824A**	1.00	0.91	59*N*A120V24**22
CSPH*4212A**	1.01	0.92	59*N*A120V24**22
CSPH*4812A**	1.01	0.92	59*N*A120V24**22
CAP**4221A**	0.98	0.93	59*P5A060E17**14
CAP**4817A**	1.01	0.95	59*P5A060E17**14
CAP**4821A**	1.00	0.95	59*P5A060E17**14
CNPH*4221A**	0.99	0.96	59*P5A060E17**14
CNPH*4321A**	1.02	0.95	59*P5A060E17**14
CNPH*4821A**	1.01	0.95	59*P5A060E17**14
CNPV*4217A**	1.00	0.96	59*P5A060E17**14
CNPV*4221A**	0.99	0.96	59*P5A060E17**14
CNPV*4821A**	1.01	0.95	59*P5A060E17**14
CSPH*4212A**	1.01	0.95	59*P5A060E17**14
CSPH*4812A**	1.01	0.95	59*P5A060E17**14
CAP**4221A**	0.99	0.95	59*P5A080E17**16
CAP**4817A**	1.01	0.95	59*P5A080E17**16
CAP**4821A**	1.01	0.96	59*P5A080E17**16
CNPH*4221A**	0.99	0.95	59*P5A080E17**16
CNPH*4321A**	1.02	0.95	59*P5A080E17**16
CNPH*4821A**	1.01	0.95	59*P5A080E17**16
CNPV*4217A**	1.00	0.95	59*P5A080E17**16
CNPV*4221A**	0.99	0.95	59*P5A080E17**16
CNPV*4821A**	1.01	0.95	59*P5A080E17**16
CSPH*4212A**	1.01	0.95	59*P5A080E17**16
CSPH*4812A**	1.01	0.94	59*P5A080E17**16
CAP**4221A**	0.99	0.93	59*P5A100E21**16
CAP**4224A**	0.99	0.93	59*P5A100E21**16
CAP**4821A**	1.00	0.93	59*P5A100E21**16
CAP**4823A**	1.00	0.93	59*P5A100E21**16
CAP**4824A**	1.01	0.94	59*P5A100E21**16
CNPH*4221A**	0.99	0.94	59*P5A100E21**16
CNPH*4321A**	1.02	0.94	59*P5A100E21**16
CNPH*4821A**	1.01	0.94	59*P5A100E21**16
CNPV*4221A**	0.99	0.94	59*P5A100E21**16
CNPV*4324A**	1.02	0.93	59*P5A100E21**16
CNPV*4821A**	1.01	0.94	59*P5A100E21**16
CNPV*4824A**	1.01	0.94	59*P5A100E21**16
CSPH*4212A**	1.01	0.94	59*P5A100E21**16
CSPH*4812A**	1.01	0.93	59*P5A100E21**16
CAP**4224A**	1.00	0.93	59*P5A120E24**22
CAP**4823A**	1.01	0.93	59*P5A120E24**22
CAP**4824A**	1.02	0.94	59*P5A120E24**22
CNPH*4221A**	1.00	0.93	59*P5A120E24**22
CNPH*4321A**	1.04	0.93	59*P5A120E24**22
CNPH*4821A**	1.02	0.93	59*P5A120E24**22
CNPV*4324A**	1.04	0.93	59*P5A120E24**22
CNPV*4824A**	1.02	0.93	59*P5A120E24**22
CSPH*4212A**	1.02	0.94	59*P5A120E24**22
CSPH*4812A**	1.02	0.93	59*P5A120E24**22
CAP**4221A**	1.00	0.98	OVLAAB048112
CAP**4821A**	1.01	0.99	OVLAAB048112
CNPH*4221A**	1.00	0.98	OVLAAB048112
CNPH*4321A**	1.02	0.98	OVLAAB048112
CNPH*4821A**	1.01	0.97	OVLAAB048112
CNPV*4221A**	1.00	0.98	OVLAAB048112
CNPV*4821A**	1.01	0.97	OVLAAB048112

Cooling Indoor Model	Capacity	Power	Furnace Model
CSPH*4212A**	1.02	1.01	OVLAAB048112
CSPH*4812A**	1.02	0.98	OVLAAB048112
CNPH*4221A**	1.01	0.97	OVLAAB060154
CNPH*4321A**	1.02	0.94	OVLAAB060154
CNPH*4821A**	1.02	0.98	OVLAAB060154
CSPH*4212A**	1.02	0.98	OVLAAB060154
CSPH*4812A**	1.02	0.98	OVLAAB060154
CAP**4817A**	1.01	0.97	OVMAAB042112
CNPH*4221A**	0.99	0.97	OVMAAB042112
CNPH*4321A**	1.02	0.98	OVMAAB042112
CNPH*4821A**	1.01	0.97	OVMAAB042112
CNPV*4217A**	1.00	0.98	OVMAAB042112
CSPH*4212A**	1.01	0.97	OVMAAB042112
CSPH*4812A**	1.01	0.97	OVMAAB042112

See notes on pg. 53

DETAILED COOLING CAPACITIES# (CONT.)

EVAPORATOR AIR		CONDENSER ENTERING AIR TEMPERATURES °F (°C)																	
		75 (23.9)			85 (29.4)			95 (35)			105 (40.6)			115 (46.1)			125 (51.7)		
CFM	EWB °F (°C)	Capacity MBtuh		Total System KW**	Capacity MBtuh		Total System KW**	Capacity MBtuh		Total System KW**	Capacity MBtuh		Total System KW**	Capacity MBtuh		Total System KW**	Capacity MBtuh		Total System KW**
		Total	Sens‡		Total	Sens‡		Total	Sens‡		Total	Sens‡		Total	Sens‡		Total	Sens‡	
24ABB348C30 Outdoor Section With CAP**4821A** Indoor Section																			
1400	72 (22.2)	55.06	27.63	3.38	52.58	26.72	3.81	49.99	25.77	4.27	47.31	24.81	4.77	44.41	23.79	5.30	41.17	22.66	5.87
	67 (19.4)	50.55	33.95	3.39	48.26	33.02	3.81	45.85	32.05	4.27	43.36	31.06	4.76	40.68	30.02	5.29	37.71	28.88	5.86
	62 (16.7)	46.40	40.21	3.40	44.30	39.26	3.81	42.13	38.26	4.26	39.90	37.21	4.75	37.58	37.58	5.28	35.36	35.36	5.85
	57 (13.9)	44.94	44.94	3.40	43.26	43.26	3.81	41.49	41.49	4.26	39.63	39.63	4.75	37.61	37.61	5.28	35.36	35.36	5.85
1600	72 (22.2)	55.93	28.89	3.46	53.34	27.96	3.89	50.65	27.01	4.35	47.88	26.04	4.85	44.88	25.00	5.38	41.53	23.85	5.95
	67 (19.4)	51.40	36.00	3.47	49.01	35.05	3.89	46.50	34.07	4.35	43.92	33.07	4.84	41.15	32.02	5.37	38.09	30.86	5.94
	62 (16.7)	47.37	43.03	3.47	45.22	42.02	3.89	43.04	42.66	4.34	41.00	41.00	4.83	38.85	38.85	5.36	36.45	36.45	5.93
	57 (13.9)	46.69	46.69	3.47	44.88	44.88	3.89	42.99	42.99	4.34	41.01	41.01	4.83	38.86	38.86	5.36	36.45	36.45	5.93
1800	72 (22.2)	56.55	30.07	3.53	53.88	29.14	3.96	51.12	28.17	4.43	48.27	27.19	4.93	45.19	26.14	5.46	41.76	24.99	6.02
	67 (19.4)	52.01	37.94	3.54	49.54	36.98	3.97	46.96	35.99	4.42	44.32	34.99	4.92	41.49	33.92	5.45	38.36	32.73	6.01
	62 (16.7)	48.22	45.57	3.55	46.18	46.18	3.97	44.19	44.19	4.42	42.10	42.10	4.91	39.84	39.84	5.44	37.30	37.30	6.01
	57 (13.9)	48.10	48.10	3.55	46.20	46.20	3.97	44.19	44.19	4.42	42.11	42.11	4.91	39.84	39.84	5.44	37.31	37.31	6.01

Cooling Indoor Model	Capacity	Power	Furnace Model
*CAP**4821A**	1.00	1.00	
CAP**4817A**	0.97	0.97	
CAP**4823A**	1.00	0.97	
CAP**4824A**	1.00	1.00	
CAP**6021A**	1.00	0.97	
CAP**6024A**	1.02	0.99	
CAP**6025A**	1.02	0.99	
CNPF*4818A**	0.98	0.98	
CNPH*4821A**	1.00	1.00	
CNPH*6024A**	1.02	0.99	
CNPH*6124A**	1.02	0.99	
CNPV*4821A**	1.00	1.00	
CNPV*4824A**	1.00	1.00	
CNPV*6024A**	1.02	0.99	
CSPH*4812A**	1.00	1.00	
CSPH*6012A**	1.02	0.99	
FB4CNF048	1.01	0.98	
FB4CNF048	1.01	0.98	
FB4CNF060	1.01	0.98	
FE4AN(B,F)005	1.01	0.92	
FE4ANB006	1.02	0.90	
FV4BN(B,F)005	1.01	0.92	
FV4BNB006	1.02	0.90	
FV4CN(B,F)005	1.01	0.92	
FV4CNB006	1.02	0.90	
FX4CN(B,F)048	1.02	0.99	
FX4CN(B,F)060	1.03	0.92	
FX4DN(B,F)049	1.01	0.94	
FX4DN(B,F)061	1.02	0.94	
FY4ANB060	1.03	1.00	
FY4ANF048	1.00	0.97	
FY5BNB060	1.01	0.98	
FY5BNF048	1.02	0.99	
FY5BNF048	1.02	0.99	
CAP**4817A**	0.97	0.92	58CV(A,X)090–16
CNPH*4821A**	0.99	0.95	58CV(A,X)090–16
CNPH*6024A**	1.00	0.93	58CV(A,X)090–16
CNPH*6124A**	1.01	0.94	58CV(A,X)090–16
CSPH*4812A**	0.99	0.95	58CV(A,X)090–16
CSPH*6012A**	1.01	0.92	58CV(A,X)090–16
CAP**4821A**	0.99	0.95	58CV(A,X)110–20
CAP**6021A**	0.99	0.90	58CV(A,X)110–20
CNPH*4821A**	0.99	0.95	58CV(A,X)110–20

Cooling Indoor Model	Capacity	Power	Furnace Model
CNPH*6024A**	1.01	0.92	58CV(A,X)110–20
CNPH*6124A**	1.02	0.95	58CV(A,X)110–20
CNPV*4821A**	0.99	0.95	58CV(A,X)110–20
CSPH*4812A**	0.99	0.95	58CV(A,X)110–20
CSPH*6012A**	1.01	0.92	58CV(A,X)110–20
CAP**4824A**	0.99	0.92	58CV(A,X)135–22
CAP**6024A**	1.01	0.92	58CV(A,X)135–22
CNPH*4821A**	0.99	0.92	58CV(A,X)135–22
CNPH*6024A**	1.01	0.92	58CV(A,X)135–22
CNPH*6124A**	1.02	0.95	58CV(A,X)135–22
CNPV*4824A**	0.99	0.92	58CV(A,X)135–22
CNPV*6024A**	1.01	0.92	58CV(A,X)135–22
CNPV*6124A**	1.02	0.99	58CV(A,X)135–22
CSPH*4812A**	0.99	0.92	58CV(A,X)135–22
CSPH*6012A**	1.01	0.92	58CV(A,X)135–22
CAP**4824A**	0.99	0.92	58CV(A,X)155–22
CAP**6024A**	1.01	0.92	58CV(A,X)155–22
CNPH*4821A**	0.99	0.90	58CV(A,X)155–22
CNPH*6024A**	1.01	0.92	58CV(A,X)155–22
CNPH*6124A**	1.02	0.91	58CV(A,X)155–22
CNPV*4824A**	0.99	0.92	58CV(A,X)155–22
CNPV*6024A**	1.01	0.92	58CV(A,X)155–22
CNPV*6124A**	1.02	0.99	58CV(A,X)155–22
CSPH*4812A**	0.99	0.90	58CV(A,X)155–22
CSPH*6012A**	1.01	0.92	58CV(A,X)155–22
CAP**4823A**	1.00	0.97	58HDV080––20
CNPH*4821A**	0.99	0.96	58HDV080––20
CNPH*6024A**	1.01	0.98	58HDV080––20
CNPH*6124A**	1.02	0.99	58HDV080––20
CNPV*4821A**	0.99	0.96	58HDV080––20
CNPV*4824A**	0.99	0.96	58HDV080––20
CNPV*6024A**	1.01	0.98	58HDV080––20
CNPV*6124A**	1.02	0.99	58HDV080––20
CSPH*4812A**	1.00	0.97	58HDV080––20
CSPH*6012A**	1.02	0.99	58HDV080––20
CAP**6025A**	1.02	0.99	58HDV100––20
CNPH*4821A**	0.99	0.96	58HDV100––20
CNPH*6024A**	1.01	0.98	58HDV100––20
CNPH*6124A**	1.02	0.99	58HDV100––20
CNPV*4824A**	0.99	0.96	58HDV100––20
CNPV*6024A**	1.01	0.98	58HDV100––20
CNPV*6124A**	1.01	0.94	58HDV100––20
CNPV*6124A**	1.01	0.94	58HDV100––20

Cooling Indoor Model	Capacity	Power	Furnace Model
CSPH*4812A**	1.00	0.97	58HDV100––20
CSPH*6012A**	1.02	0.99	58HDV100––20
CAP**4817A**	1.00	0.97	58ME(B,C)080–16
CNPH*4821A**	0.99	0.96	58ME(B,C)080–16
CNPH*6024A**	1.00	0.97	58ME(B,C)080–16
CSPH*4812A**	1.00	0.97	58ME(B,C)080–16
CSPH*6012A**	1.00	0.93	58ME(B,C)080–16
CAP**4821A**	1.00	0.97	58ME(B,C)100–20
CAP**6021A**	1.00	0.93	58ME(B,C)100–20
CNPH*4821A**	1.00	0.97	58ME(B,C)100–20
CNPH*6024A**	1.00	0.93	58ME(B,C)100–20
CNPV*4821A**	1.00	0.93	58ME(B,C)100–20
CSPH*4812A**	1.00	0.93	58ME(B,C)100–20
CSPH*6012A**	1.00	0.93	58ME(B,C)100–20
CAP**4824A**	1.00	0.93	58ME(B,C)120–20
CAP**6024A**	1.00	0.93	58ME(B,C)120–20
CNPH*4821A**	1.00	0.93	58ME(B,C)120–20
CNPH*6024A**	1.00	0.93	58ME(B,C)120–20
CNPV*4824A**	1.00	0.93	58ME(B,C)120–20
CNPV*6024A**	1.00	0.93	58ME(B,C)120–20
CSPH*4812A**	1.00	0.93	58ME(B,C)120–20
CSPH*6012A**	1.00	0.93	58ME(B,C)120–20
CNPH*6124A**	1.02	0.99	58MEC080–16
CNPH*6124A**	1.02	0.95	58MEC100–20
CNPH*6124A**	1.02	0.95	58MEC120–20
CNPV*6124A**	1.02	0.99	58MEC120–20
CAP**4821A**	0.98	0.93	58MV(B,C)080–20
CAP**6021A**	0.99	0.92	58MV(B,C)080–20
CNPH*4821A**	0.98	0.93	58MV(B,C)080–20
CNPH*6024A**	1.00	0.93	58MV(B,C)080–20
CNPH*6124A**	1.01	0.98	58MV(B,C)080–20
CNPV*4821A**	0.98	0.93	58MV(B,C)080–20
CSPH*4812A**	0.98	0.93	58MV(B,C)080–20
CSPH*6012A**	1.00	0.93	58MV(B,C)080–20
CAP**4821A**	0.99	0.95	58MV(B,C)100–20
CAP**6021A**	0.99	0.92	58MV(B,C)100–20
CNPH*4821A**	0.99	0.95	58MV(B,C)100–20
CNPH*6024A**	1.01	0.97	58MV(B,C)100–20
CNPH*6124A**	1.02	0.99	58MV(B,C)100–20
CNPV*4821A**	0.99	0.95	58MV(B,C)100–20
CSPH*4812A**	0.99	0.95	58MV(B,C)100–20
CSPH*6012A**	1.01	0.94	58MV(B,C)100–20
CAP**4824A**	0.99	0.95	58MV(B,C)120–20

DETAILED COOLING CAPACITIES# (CONT.)

24ABB348C30 Outdoor Section With CAP4821A** Indoor Section**

Cooling Indoor Model	Capacity	Power	Furnace Model
CAP**6024A**	1.01	0.94	58MV(B,C)120–20
CNPH*4821A**	0.99	0.95	58MV(B,C)120–20
CNPH*6024A**	1.01	0.94	58MV(B,C)120–20
CNPH*6124A**	1.02	0.95	58MV(B,C)120–20
CNPV*4824A**	0.99	0.95	58MV(B,C)120–20
CNPV*6024A**	1.01	0.94	58MV(B,C)120–20
CNPV*6124A**	1.02	0.99	58MV(B,C)120–20
CSPH*4812A**	0.99	0.95	58MV(B,C)120–20
CSPH*6012A**	1.01	0.94	58MV(B,C)120–20
CNPH*6124A**	1.01	0.98	58PH*070–16
CAP**4821A**	0.99	0.95	58PH*090–16
CAP**6021A**	1.01	0.92	58PH*090–16
CNPH*4821A**	0.99	0.95	58PH*090–16
CNPH*6024A**	1.01	0.94	58PH*090–16
CNPH*6124A**	1.02	0.95	58PH*090–16
CNPV*4821A**	0.99	0.95	58PH*090–16
CSPH*4812A**	0.99	0.95	58PH*090–16
CSPH*6012A**	1.01	0.94	58PH*090–16
CAP**4821A**	0.99	0.92	58PH*110–20
CAP**6021A**	1.01	0.92	58PH*110–20
CNPH*4821A**	0.99	0.92	58PH*110–20
CNPH*6024A**	1.01	0.92	58PH*110–20
CNPH*6124A**	1.02	0.95	58PH*110–20
CNPV*4821A**	0.99	0.92	58PH*110–20
CSPH*4812A**	0.99	0.92	58PH*110–20
CSPH*6012A**	1.01	0.92	58PH*110–20
CAP**4824A**	0.99	0.92	58PH*135–20
CAP**6024A**	1.01	0.92	58PH*135–20
CNPH*4821A**	0.99	0.92	58PH*135–20
CNPH*6024A**	1.01	0.92	58PH*135–20
CNPH*6124A**	1.02	0.95	58PH*135–20
CNPV*4824A**	0.99	0.92	58PH*135–20
CNPV*6024A**	1.01	0.92	58PH*135–20
CNPV*6124A**	1.02	0.99	58PH*135–20
CSPH*4812A**	0.99	0.92	58PH*135–20
CSPH*6012A**	1.01	0.92	58PH*135–20
CAP**4821A**	0.98	0.93	58UVB080–20
CAP**4821A**	0.98	0.93	58UVB080–20
CAP**4821A**	0.98	0.93	58UVB080–20
CAP**6021A**	0.99	0.92	58UVB080–20
CAP**6021A**	0.99	0.92	58UVB080–20
CAP**6021A**	0.99	0.92	58UVB080–20
CNPV*4821A**	0.98	0.93	58UVB080–20
CNPV*4821A**	0.98	0.93	58UVB080–20
CNPV*4821A**	0.98	0.93	58UVB080–20
CAP**4821A**	0.99	0.95	58UVB100–20
CAP**4821A**	0.99	0.95	58UVB100–20
CAP**4821A**	0.99	0.95	58UVB100–20
CAP**6021A**	0.99	0.92	58UVB100–20
CAP**6021A**	0.99	0.92	58UVB100–20
CAP**6021A**	0.99	0.92	58UVB100–20
CNPV*4821A**	0.99	0.95	58UVB100–20
CNPV*4821A**	0.99	0.95	58UVB100–20
CNPV*4821A**	0.99	0.95	58UVB100–20
CNPV*4824A**	0.99	0.95	58UVB100–20
CAP**4824A**	0.99	0.95	58UVB120–20
CAP**4824A**	0.99	0.95	58UVB120–20
CAP**4824A**	0.99	0.95	58UVB120–20
CAP**6024A**	1.01	0.94	58UVB120–20
CAP**6024A**	1.01	0.94	58UVB120–20

Cooling Indoor Model	Capacity	Power	Furnace Model
CAP**6024A**	1.01	0.94	58UVB120–20
CNPV*4824A**	0.99	0.95	58UVB120–20
CNPV*4824A**	0.99	0.95	58UVB120–20
CNPV*6024A**	1.01	0.94	58UVB120–20
CNPV*6024A**	1.01	0.94	58UVB120–20
CNPV*6024A**	1.01	0.94	58UVB120–20
CNPV*6124A**	1.02	0.99	58UVB120–20
CNPV*6124A**	1.02	0.99	58UVB120–20
CNPV*6124A**	1.02	0.99	58UVB120–20
CAP**4821A**	0.98	0.95	58VLR120–20
CAP**6021A**	1.00	0.93	58VLR120–20
CNPH*4821A**	0.98	0.95	58VLR120–20
CNPH*6024A**	1.00	0.93	58VLR120–20
CNPH*6124A**	1.01	0.94	58VLR120–20
CNPV*4821A**	0.98	0.95	58VLR120–20
CSPH*4812A**	0.99	0.96	58VLR120–20
CSPH*6012A**	1.01	0.94	58VLR120–20
CAP**4821A**	0.98	0.95	58VMR120–20
CAP**6021A**	1.00	0.97	58VMR120–20
CNPH*4821A**	0.98	0.95	58VMR120–20
CNPH*6024A**	1.00	0.97	58VMR120–20
CNPH*6124A**	1.00	0.97	58VMR120–20
CNPV*4821A**	0.98	0.95	58VMR120–20
CSPH*4812A**	0.99	0.96	58VMR120–20
CSPH*6012A**	1.00	0.93	58VMR120–20
CAP**4821A**	0.97	0.94	59*N*A100V21**20
CAP**4823A**	0.97	0.94	59*N*A100V21**20
CAP**4824A**	0.98	0.93	59*N*A100V21**20
CAP**6021A**	1.00	0.94	59*N*A100V21**20
CAP**6024A**	1.00	0.94	59*N*A100V21**20
CAP**6025A**	1.00	0.94	59*N*A100V21**20
CNPH*4821A**	0.98	0.93	59*N*A100V21**20
CNPH*6024A**	0.99	0.93	59*N*A100V21**20
CNPH*6124A**	1.00	0.94	59*N*A100V21**20
CNPV*4821A**	0.98	0.93	59*N*A100V21**20
CNPV*4824A**	0.98	0.93	59*N*A100V21**20
CNPV*6024A**	0.99	0.93	59*N*A100V21**20
CNPV*6124A**	1.01	0.94	59*N*A100V21**20
CSPH*4812A**	0.98	0.93	59*N*A100V21**20
CSPH*6012A**	1.00	0.94	59*N*A100V21**20
CAP**4823A**	0.97	0.91	59*N*A120V24**22
CAP**4824A**	0.98	0.92	59*N*A120V24**22
CAP**6024A**	1.00	0.93	59*N*A120V24**22
CAP**6025A**	1.00	0.93	59*N*A120V24**22
CNPH*4821A**	0.98	0.92	59*N*A120V24**22
CNPH*6024A**	0.99	0.92	59*N*A120V24**22
CNPH*6124A**	1.00	0.93	59*N*A120V24**22
CNPV*4824A**	0.98	0.92	59*N*A120V24**22
CNPV*6024A**	0.99	0.92	59*N*A120V24**22
CNPV*6124A**	1.01	0.92	59*N*A120V24**22
CSPH*4812A**	0.99	0.93	59*N*A120V24**22
CSPH*6012A**	1.00	0.91	59*N*A120V24**22
CNPH*4821A**	0.98	0.95	59*P5A080E17**16
CNPH*6024A**	1.00	0.97	59*P5A080E17**16
CNPV*4821A**	0.98	0.95	59*P5A080E17**16
CSPH*6012A**	1.00	0.96	59*P5A080E17**16
CAP**4821A**	0.98	0.95	59*P5A100E21**16
CAP**4823A**	0.98	0.95	59*P5A100E21**16
CAP**4824A**	0.98	0.95	59*P5A100E21**16
CAP**6021A**	1.00	0.96	59*P5A100E21**16

Cooling Indoor Model	Capacity	Power	Furnace Model
CAP**6024A**	1.00	0.96	59*P5A100E21**16
CAP**6025A**	1.00	0.96	59*P5A100E21**16
CNPH*4821A**	0.98	0.95	59*P5A100E21**16
CNPH*6024A**	1.00	0.94	59*P5A100E21**16
CNPH*6124A**	1.00	0.94	59*P5A100E21**16
CNPV*4821A**	0.98	0.95	59*P5A100E21**16
CNPV*4824A**	0.98	0.95	59*P5A100E21**16
CNPV*6024A**	1.00	0.94	59*P5A100E21**16
CNPV*6124A**	1.01	0.95	59*P5A100E21**16
CSPH*4812A**	0.99	0.95	59*P5A100E21**16
CSPH*6012A**	1.01	0.95	59*P5A100E21**16
CAP**4823A**	0.98	0.93	59*P5A120E24**22
CAP**4824A**	0.99	0.93	59*P5A120E24**22
CAP**6024A**	1.01	0.94	59*P5A120E24**22
CAP**6025A**	1.01	0.94	59*P5A120E24**22
CNPH*4821A**	0.99	0.93	59*P5A120E24**22
CNPH*6024A**	1.01	0.94	59*P5A120E24**22
CNPH*6124A**	1.01	0.94	59*P5A120E24**22
CNPV*4824A**	0.99	0.93	59*P5A120E24**22
CNPV*6024A**	1.01	0.94	59*P5A120E24**22
CNPV*6124A**	1.02	0.93	59*P5A120E24**22
CSPH*4812A**	0.99	0.93	59*P5A120E24**22
CSPH*6012A**	1.01	0.94	59*P5A120E24**22
CAP**4821A**	0.98	0.98	OVLAAB048112
CAP**6021A**	1.00	0.97	OVLAAB048112
CNPH*4821A**	0.98	0.97	OVLAAB048112
CNPH*6024A**	1.00	0.97	OVLAAB048112
CNPH*6124A**	1.01	0.98	OVLAAB048112
CNPV*4821A**	0.98	0.97	OVLAAB048112
CSPH*4812A**	0.99	0.98	OVLAAB048112
CSPH*6012A**	1.01	0.98	OVLAAB048112
CNPH*4821A**	1.00	0.97	OVLAAB060154
CNPH*6024A**	1.01	0.98	OVLAAB060154
CNPH*6124A**	1.03	1.00	OVLAAB060154
CSPH*4812A**	1.01	0.98	OVLAAB060154
CSPH*6012A**	1.03	1.00	OVLAAB060154

See notes on pg. 53

DETAILED COOLING CAPACITIES# (CONT.)

EVAPORATOR AIR		CONDENSER ENTERING AIR TEMPERATURES °F (°C)																	
		75 (23.9)			85 (29.4)			95 (35)			105 (40.6)			115 (46.1)			125 (51.7)		
CFM	EWB °F (°C)	Capacity MBtuh		Total System KW**	Capacity MBtuh		Total System KW**	Capacity MBtuh		Total System KW**	Capacity MBtuh		Total System KW**	Capacity MBtuh		Total System KW**	Capacity MBtuh		Total System KW**
		Total	Sens‡		Total	Sens‡		Total	Sens‡		Total	Sens‡		Total	Sens‡		Total	Sens‡	
24ABB360C31 Outdoor Section With CAP**6024A** Indoor Section																			
1750	72 (22.2)	70.46	35.93	4.33	67.31	34.74	4.78	63.92	33.47	5.27	60.32	32.15	5.81	56.39	30.72	6.39	52.01	29.16	7.01
	67 (19.4)	64.68	44.05	4.27	61.75	42.83	4.72	58.63	41.54	5.21	55.32	40.20	5.74	51.73	38.76	6.33	47.76	37.20	6.95
	62 (16.7)	59.39	52.12	4.21	56.74	50.88	4.66	53.92	49.56	5.15	50.97	48.16	5.69	47.86	47.65	6.28	44.83	44.83	6.91
	57 (13.9)	57.39	57.39	4.19	55.26	55.26	4.64	52.97	52.97	5.14	50.52	50.52	5.68	47.85	47.85	6.28	44.83	44.83	6.91
2000	72 (22.2)	71.67	37.60	4.44	68.36	36.38	4.88	64.83	35.09	5.38	61.09	33.75	5.91	57.02	32.30	6.49	52.47	30.71	7.11
	67 (19.4)	65.82	46.74	4.37	62.76	45.50	4.82	59.50	44.19	5.31	56.06	42.82	5.85	52.35	41.37	6.43	48.23	39.77	7.05
	62 (16.7)	60.66	55.81	4.32	57.92	54.51	4.77	55.06	53.07	5.26	52.29	52.29	5.80	49.42	49.42	6.39	46.19	46.19	7.03
	57 (13.9)	59.65	59.65	4.31	57.36	57.36	4.76	54.91	54.91	5.26	52.29	52.29	5.80	49.42	49.42	6.39	46.19	46.19	7.03
2250	72 (22.2)	72.54	39.16	4.54	69.12	37.93	4.99	65.48	36.63	5.48	61.62	35.26	6.02	57.43	33.80	6.59	52.76	32.19	7.21
	67 (19.4)	66.64	49.29	4.48	63.48	48.03	4.92	60.13	46.72	5.42	56.59	45.34	5.95	52.78	43.85	6.53	48.57	42.20	7.15
	62 (16.7)	61.76	59.17	4.43	59.03	59.03	4.88	56.48	56.48	5.37	53.71	53.71	5.92	50.67	50.67	6.50	47.25	47.25	7.14
	57 (13.9)	61.50	61.50	4.42	59.08	59.08	4.88	56.48	56.48	5.37	53.71	53.71	5.92	50.67	50.67	6.51	47.26	47.26	7.14

Cooling Indoor Model	Capacity	Power	Furnace Model
*CAP**6024A**	1.00	1.00	
CAP**6021A**	0.98	0.98	
CAP**6025A**	1.00	1.02	
CNPH*6024A**	1.00	1.00	
CNPH*6124A**	0.99	1.01	
CNPV*6024A**	1.00	1.00	
CNPV*6124A**	1.00	1.02	
CSPH*6012A**	1.00	1.00	
FB4CNF060	0.98	1.00	
FE4ANB006	1.00	0.96	
FV4BNB006	1.00	0.96	
FV4CNB006	1.00	0.96	
FX4CN(B,F)060	1.01	0.97	
FX4DN(B,F)061	1.00	0.97	
FY4ANB060	0.98	1.01	
FY5BNB060	1.00	1.03	
CAP**6021A**	0.98	0.98	58CV(A,X)110–20
CNPH*6024A**	0.97	0.97	58CV(A,X)110–20
CNPH*6124A**	0.99	1.01	58CV(A,X)110–20
CSPH*6012A**	0.98	0.98	58CV(A,X)110–20
CAP**6024A**	0.98	0.96	58CV(A,X)135–22
CNPH*6024A**	0.98	0.96	58CV(A,X)135–22
CNPH*6124A**	0.99	1.01	58CV(A,X)135–22
CNPV*6024A**	0.98	0.96	58CV(A,X)135–22
CNPV*6124A**	1.00	1.02	58CV(A,X)135–22
CSPH*6012A**	0.98	0.96	58CV(A,X)135–22
CAP**6024A**	0.98	0.96	58CV(A,X)155–22
CNPH*6024A**	0.98	0.96	58CV(A,X)155–22
CNPH*6124A**	0.99	1.01	58CV(A,X)155–22
CNPV*6024A**	0.98	0.96	58CV(A,X)155–22
CNPV*6124A**	1.00	1.02	58CV(A,X)155–22
CSPH*6012A**	0.98	0.96	58CV(A,X)155–22
CNPH*6024A**	0.97	1.02	58HDV080––20
CNPH*6124A**	0.98	1.02	58HDV080––20
CNPV*6024A**	0.97	1.02	58HDV080––20
CNPV*6124A**	0.99	1.01	58HDV080––20
CNPH*6024A**	0.97	0.99	58HDV100––20
CNPH*6124A**	0.98	1.00	58HDV100––20

Cooling Indoor Model	Capacity	Power	Furnace Model
CNPV*6024A**	0.97	0.99	58HDV100––20
CNPV*6124A**	0.99	0.99	58HDV100––20
CSPH*6012A**	0.99	1.01	58HDV100––20
CNPH*6024A**	0.97	0.98	58ME(B,C)080–16
CSPH*6012A**	0.97	0.99	58ME(B,C)080–16
CAP**6021A**	0.97	0.99	58ME(B,C)100–20
CNPH*6024A**	0.97	0.99	58ME(B,C)100–20
CSPH*6012A**	0.98	1.00	58ME(B,C)100–20
CAP**6024A**	0.97	0.99	58ME(B,C)120–20
CNPH*6024A**	0.97	0.99	58ME(B,C)120–20
CNPV*6024A**	0.97	0.99	58ME(B,C)120–20
CSPH*6012A**	0.98	1.00	58ME(B,C)120–20
CNPH*6124A**	0.97	0.99	58MEC080–16
CNPH*6124A**	0.98	1.00	58MEC100–20
CNPH*6124A**	0.98	1.00	58MEC120–20
CNPV*6124A**	1.00	1.02	58MEC120–20
CAP**6021A**	0.97	1.02	58MV(B,C)080–20
CNPH*6024A**	0.97	1.02	58MV(B,C)080–20
CSPH*6012A**	0.97	1.01	58MV(B,C)080–20
CAP**6021A**	0.97	0.99	58MV(B,C)100–20
CNPH*6024A**	0.97	0.98	58MV(B,C)100–20
CSPH*6012A**	0.97	0.99	58MV(B,C)100–20
CAP**6024A**	0.97	0.97	58MV(B,C)120–20
CAP**6025A**	0.98	1.00	58MV(B,C)120–20
CNPH*6024A**	0.97	0.97	58MV(B,C)120–20
CNPH*6124A**	0.98	1.00	58MV(B,C)120–20
CNPV*6024A**	0.97	0.97	58MV(B,C)120–20
CNPV*6124A**	0.99	1.01	58MV(B,C)120–20
CSPH*6012A**	0.97	0.97	58MV(B,C)120–20
CAP**6021A**	0.98	0.96	58PH*110–20
CNPH*6024A**	0.98	0.96	58PH*110–20
CSPH*6012A**	0.98	0.96	58PH*110–20
CAP**6024A**	0.97	0.95	58PH*135–20
CNPH*6024A**	0.97	0.95	58PH*135–20
CNPH*6124A**	0.98	1.00	58PH*135–20
CNPV*6024A**	0.97	0.95	58PH*135–20
CNPV*6124A**	1.00	1.02	58PH*135–20
CSPH*6012A**	0.97	0.95	58PH*135–20

Cooling Indoor Model	Capacity	Power	Furnace Model
CAP**6021A**	0.97	1.02	58UVB080–20
CAP**6021A**	0.97	1.02	58UVB080–20
CAP**6021A**	0.97	0.99	58UVB100–20
CAP**6021A**	0.97	0.99	58UVB100–20
CAP**6024A**	0.97	0.97	58UVB120–20
CAP**6024A**	0.97	0.97	58UVB120–20
CAP**6024A**	0.97	0.97	58UVB120–20
CAP**6025A**	0.98	1.00	58UVB120–20
CAP**6025A**	0.98	1.00	58UVB120–20
CAP**6025A**	0.98	1.00	58UVB120–20
CNPV*6024A**	0.97	0.97	58UVB120–20
CNPV*6024A**	0.97	0.97	58UVB120–20
CNPV*6024A**	0.97	0.97	58UVB120–20
CNPV*6124A**	0.99	1.01	58UVB120–20
CNPV*6124A**	0.99	1.01	58UVB120–20
CNPV*6124A**	0.99	1.01	58UVB120–20
CAP**6021A**	0.97	0.97	58VLR120–20
CNPH*6024A**	0.97	0.97	58VLR120–20
CNPH*6124A**	0.98	0.98	58VLR120–20
CSPH*6012A**	0.98	0.98	58VLR120–20
CAP**6021A**	0.97	1.01	58VMR120–20
CNPH*6024A**	0.97	1.01	58VMR120–20
CNPH*6124A**	0.97	1.01	58VMR120–20
CSPH*6012A**	0.97	0.99	58VMR120–20
CAP**6024A**	0.97	0.99	59*N*A120V24**22
CAP**6025A**	0.97	0.99	59*N*A120V24**22
CNPH*6024A**	0.97	0.97	59*N*A120V24**22
CNPH*6124A**	0.97	0.99	59*N*A120V24**22
CNPV*6024A**	0.97	0.97	59*N*A120V24**22
CNPV*6124A**	0.98	0.98	59*N*A120V24**22
CSPH*6012A**	0.97	0.97	59*N*A120V24**22
CAP**6024A**	0.97	0.99	59*P5A120E24**22
CAP**6025A**	0.97	0.99	59*P5A120E24**22
CNPH*6024A**	0.97	0.98	59*P5A120E24**22
CNPH*6124A**	0.97	0.97	59*P5A120E24**22
CNPV*6024A**	0.97	0.98	59*P5A120E24**22
CNPV*6124A**	0.98	0.98	59*P5A120E24**22
CSPH*6012A**	0.97	0.97	59*P5A120E24**22

DETAILED COOLING CAPACITIES# (CONT.)

24ABB360C31 Outdoor Section With CAP6024A** Indoor Section**

Cooling Indoor Model	Capacity	Power	Furnace Model
CNPH*6024A**	0.98	1.05	OVLAAB060154
CNPH*6124A**	0.99	1.05	OVLAAB060154
CSPH*6012A**	0.99	1.05	OVLAAB060154

* Tested combination.

† Total and sensible capacities are net capacities. Blower motor heat has been subtracted.

‡ Sensible capacities shown are based on 80°F (27°C) entering air at the indoor coil. For sensible capacities at other than 80°F (27°C), deduct 835 Btuh (245 kW) per 1000 CFM (480 L/S) of indoor coil air for each degree below 80°F (27°C), or add 835 Btuh (245 kW) per 1000 CFM (480 L/S) of indoor coil air per degree above 80°F (27°C).

Detailed cooling capacities are based on indoor and outdoor unit at the same elevation per AHRI standard 210/240–94. If additional tubing length and/or indoor unit is located above outdoor unit, a slight variation in capacity may occur.

** System kw is total of indoor and outdoor unit kilowatts.

†† At TVA rating indoor condition (75°F edb/63°F ewb). All other indoor air temperatures are at 80°F edb.

NOTE: When the required data falls between the published data, interpolation may be performed. Extrapolation is not an acceptable practice.

EWB — Entering Wet Bulb

NOTE: When the required data fall between the published data, interpolation may be performed. Extrapolation is not an acceptable practice.

CONDENSER ONLY RATINGS*

SST °F (°C)		CONDENSER ENTERING AIR TEMPERATURES °F (°C)							
		55 (12.78)	65 (18.33)	75 (23.89)	85 (29.44)	95 (35.0)	105 (40.56)	115 (46.11)	125 (51.67)
24ABB318C30									
30 (−1.11)	TCG	16.90	15.90	15.00	14.00	12.90	11.90	10.80	9.70
	SDT	68.50	77.80	87.20	96.60	106.10	115.50	125.00	134.40
	KW	0.83	0.95	1.08	1.23	1.39	1.56	1.74	1.93
35 (1.67)	TCG	18.60	17.60	16.50	15.50	14.40	13.20	12.10	10.80
	SDT	69.60	78.90	88.30	97.60	107.00	116.40	125.80	135.20
	KW	0.83	0.95	1.08	1.23	1.39	1.56	1.75	1.94
40 (4.44)	TCG	20.50	19.40	18.20	17.10	15.90	14.70	13.40	12.10
	SDT	70.80	80.10	89.30	98.60	107.90	117.20	126.60	135.90
	KW	0.83	0.95	1.08	1.23	1.39	1.57	1.75	1.96
45 (7.22)	TCG	22.40	21.20	20.00	18.70	17.50	16.20	14.80	13.40
	SDT	72.10	81.30	90.50	99.70	108.90	118.20	127.40	136.70
	KW	0.83	0.95	1.08	1.23	1.39	1.57	1.76	1.96
50 (10.0)	TCG	24.40	23.10	21.80	20.50	19.10	17.70	16.20	14.70
	SDT	73.40	82.50	91.60	100.80	109.90	119.10	128.30	137.40
	KW	0.83	0.95	1.08	1.23	1.39	1.57	1.76	1.97
55 (12.78)	TCG	26.50	25.10	23.70	22.20	20.70	19.20	17.70	16.10
	SDT	74.80	83.80	92.90	101.90	111.00	120.10	129.20	138.20
	KW	0.83	0.95	1.08	1.23	1.39	1.57	1.76	1.97
24ABB324C30									
30 (−1.11)	TCG	20.60	19.40	18.30	17.10	16.00	14.70	13.50	12.20
	SDT	71.70	80.80	90.10	99.30	108.60	118.00	127.40	136.90
	KW	1.07	1.22	1.39	1.58	1.78	2.01	2.25	2.52
35 (1.67)	TCG	22.70	21.40	20.20	18.90	17.70	16.40	15.00	13.60
	SDT	73.10	82.20	91.30	100.50	109.70	119.00	128.40	137.70
	KW	1.08	1.23	1.40	1.58	1.79	2.02	2.27	2.54
40 (4.44)	TCG	24.90	23.60	22.20	20.90	19.50	18.10	16.60	15.10
	SDT	74.60	83.60	92.60	101.70	110.90	120.10	129.30	138.60
	KW	1.09	1.24	1.41	1.59	1.80	2.03	2.28	2.55
45 (7.22)	TCG	27.30	25.90	24.40	23.00	21.50	19.90	18.30	16.70
	SDT	76.20	85.00	94.00	103.00	112.00	121.20	130.30	139.50
	KW	1.10	1.25	1.42	1.60	1.81	2.04	2.29	2.56
50 (10.0)	TCG	29.80	28.30	26.70	25.10	23.50	21.90	20.20	18.30
	SDT	77.90	86.60	95.40	104.30	113.30	122.30	131.30	140.40
	KW	1.11	1.26	1.43	1.61	1.82	2.05	2.30	2.57
55 (12.78)	TCG	32.50	30.80	29.10	27.40	25.70	23.90	22.00	20.10
	SDT	79.60	88.20	97.00	105.80	114.60	123.50	132.40	141.30
	KW	1.12	1.27	1.44	1.62	1.83	2.06	2.31	2.58
24ABB330C30									
30 (−1.11)	TCG	26.90	25.50	24.00	22.50	21.00	19.40	17.70	15.90
	SDT	71.30	80.30	89.40	98.50	107.70	117.00	126.30	135.60
	KW	1.42	1.59	1.78	2.00	2.23	2.48	2.76	3.04
35 (1.67)	TCG	29.60	28.10	26.50	24.90	23.20	21.50	19.70	17.80
	SDT	72.70	81.60	90.60	99.70	108.80	118.00	127.20	136.40
	KW	1.42	1.60	1.79	2.00	2.24	2.50	2.78	3.07
40 (4.44)	TCG	32.50	30.90	29.20	27.40	25.70	23.80	21.90	19.80
	SDT	74.30	83.00	91.90	100.90	109.90	119.00	128.10	137.30
	KW	1.43	1.61	1.80	2.01	2.25	2.51	2.79	3.10
45 (7.22)	TCG	35.60	33.80	32.00	30.20	28.20	26.20	24.20	21.90
	SDT	75.90	84.50	93.30	102.10	111.10	120.10	129.10	138.20
	KW	1.45	1.62	1.81	2.02	2.26	2.52	2.81	3.12
50 (10.0)	TCG	38.90	37.00	35.00	33.00	31.00	28.80	26.60	24.20
	SDT	77.60	86.10	94.70	103.50	112.30	121.20	130.10	139.10
	KW	1.46	1.63	1.82	2.04	2.27	2.54	2.82	3.13
55 (12.78)	TCG	42.50	40.40	38.20	36.10	33.80	31.50	29.10	26.50
	SDT	79.50	87.80	96.30	104.90	113.60	122.40	131.20	140.00
	KW	1.48	1.65	1.84	2.05	2.29	2.55	2.84	3.15
24ABB336C30									
30 (−1.11)	TCG	33.30	31.50	29.70	27.80	25.90	23.90	21.80	19.50
	SDT	71.60	80.70	89.90	99.10	108.30	117.50	126.70	135.90
	KW	1.69	1.91	2.15	2.42	2.71	3.02	3.36	3.70
35 (1.67)	TCG	36.70	34.70	32.80	30.80	28.70	26.50	24.20	21.80
	SDT	73.10	82.10	91.20	100.30	109.40	118.60	127.70	136.80
	KW	1.70	1.92	2.16	2.43	2.73	3.05	3.39	3.75
40 (4.44)	TCG	40.20	38.10	36.00	33.80	31.60	29.30	26.80	24.20
	SDT	74.60	83.50	92.50	101.60	110.60	119.70	128.80	137.80
	KW	1.72	1.94	2.18	2.45	2.75	3.07	3.42	3.79
45 (7.22)	TCG	44.00	41.70	39.40	37.10	34.60	32.10	29.50	26.70
	SDT	76.30	85.10	94.00	102.90	111.90	120.90	129.90	138.80
	KW	1.74	1.95	2.20	2.47	2.77	3.10	3.45	3.82
50 (10.0)	TCG	47.90	45.50	43.00	40.40	37.80	35.10	32.30	29.20
	SDT	78.00	86.70	95.50	104.30	113.20	122.10	131.00	139.70
	KW	1.75	1.97	2.22	2.49	2.79	3.12	3.47	3.85
55 (12.78)	TCG	52.10	49.40	46.70	43.90	41.10	38.20	35.10	31.80
	SDT	79.80	88.40	97.00	105.80	114.60	123.30	132.10	140.70
	KW	1.78	1.99	2.24	2.51	2.81	3.14	3.49	3.87

See notes on pg. 55

CONDENSER ONLY RATINGS* (CONT.)

SST °F (°C)		CONDENSER ENTERING AIR TEMPERATURES °F (°C)							
		55 (12.78)	65 (18.33)	75 (23.89)	85 (29.44)	95 (35.0)	105 (40.56)	115 (46.11)	125 (51.67)
24ABB342C30									
30 (−1.11)	TCG	38.30	36.20	34.00	31.90	29.80	27.70	25.50	23.20
	SDT	75.60	84.60	93.70	102.80	111.90	121.10	130.40	139.60
	KW	2.07	2.36	2.67	2.98	3.29	3.61	3.94	4.27
35 (1.67)	TCG	42.20	39.90	37.60	35.30	33.00	30.60	28.20	25.70
	SDT	77.30	86.10	95.10	104.10	113.10	122.30	131.40	140.60
	KW	2.01	2.33	2.64	2.97	3.30	3.64	3.98	4.33
40 (4.44)	TCG	46.40	43.90	41.30	38.80	36.30	33.80	31.10	28.40
	SDT	79.00	87.70	96.50	105.40	114.40	123.40	132.50	141.50
	KW	1.95	2.28	2.61	2.95	3.30	3.65	4.01	4.38
45 (7.22)	TCG	50.90	48.10	45.40	42.60	39.90	37.10	34.20	31.20
	SDT	80.80	89.40	98.10	106.90	115.70	124.60	133.50	142.40
	KW	1.88	2.22	2.57	2.93	3.29	3.66	4.03	4.41
50 (10.0)	TCG	55.60	52.60	49.60	46.60	43.60	40.50	37.40	34.10
	SDT	82.70	91.20	99.70	108.40	117.10	125.90	134.60	143.40
	KW	1.80	2.15	2.52	2.89	3.27	3.65	4.04	4.44
55 (12.78)	TCG	60.50	57.20	54.00	50.70	47.40	44.10	40.70	37.00
	SDT	84.70	93.00	101.40	109.90	118.50	127.20	135.80	144.30
	KW	1.71	2.08	2.45	2.84	3.23	3.64	4.04	4.45
24ABB348C30									
30 (−1.11)	TCG	43.60	41.10	38.60	36.20	33.70	31.20	28.70	26.10
	SDT	75.50	84.50	93.60	102.70	111.80	121.00	130.20	139.50
	KW	2.19	2.52	2.88	3.27	3.68	4.12	4.60	5.11
35 (1.67)	TCG	48.10	45.30	42.60	39.90	37.20	34.50	31.70	28.80
	SDT	77.20	86.10	95.00	104.00	113.10	122.20	131.30	140.40
	KW	2.19	2.53	2.89	3.29	3.71	4.16	4.64	5.16
40 (4.44)	TCG	52.80	49.80	46.80	43.90	40.90	38.00	34.90	31.70
	SDT	78.90	87.70	96.60	105.40	114.40	123.40	132.40	141.40
	KW	2.19	2.53	2.90	3.30	3.73	4.19	4.68	5.20
45 (7.22)	TCG	57.80	54.50	51.30	48.00	44.80	41.50	38.20	34.70
	SDT	80.80	89.40	98.10	106.90	115.70	124.60	133.50	142.30
	KW	2.18	2.53	2.91	3.31	3.75	4.21	4.71	5.24
50 (10.0)	TCG	63.00	59.40	55.90	52.30	48.80	45.20	41.60	37.70
	SDT	82.70	91.20	99.80	108.50	117.10	125.90	134.60	143.30
	KW	2.17	2.53	2.91	3.32	3.76	4.24	4.74	5.26
55 (12.78)	TCG	68.40	64.50	60.60	56.70	52.80	49.00	45.00	40.70
	SDT	84.80	93.10	101.50	110.00	118.60	127.20	135.80	144.20
	KW	2.17	2.53	2.91	3.33	3.78	4.25	4.76	5.29
24ABB360C31									
30 (−1.11)	TCG	57.70	54.50	51.30	48.00	44.70	41.20	37.70	33.90
	SDT	74.10	83.20	92.30	101.50	110.60	119.70	128.80	137.80
	KW	2.74	3.09	3.48	3.90	4.37	4.88	5.43	6.01
35 (1.67)	TCG	63.40	59.90	56.40	52.90	49.20	45.50	41.60	37.50
	SDT	75.80	84.80	93.80	102.90	111.90	120.90	129.90	138.80
	KW	2.79	3.14	3.53	3.96	4.43	4.94	5.49	6.08
40 (4.44)	TCG	69.40	65.70	61.90	58.00	54.00	49.90	45.70	41.20
	SDT	77.60	86.50	95.40	104.40	113.30	122.20	131.10	139.90
	KW	2.85	3.19	3.58	4.01	4.48	5.00	5.55	6.15
45 (7.22)	TCG	75.80	71.70	67.50	63.30	59.00	54.60	49.90	45.00
	SDT	79.40	88.20	97.10	105.90	114.80	123.60	132.30	140.90
	KW	2.90	3.25	3.64	4.07	4.55	5.06	5.62	6.21
50 (10.0)	TCG	82.50	78.00	73.50	68.90	64.20	59.30	54.30	48.90
	SDT	81.40	90.10	98.80	107.50	116.30	124.90	133.60	142.00
	KW	2.97	3.32	3.71	4.14	4.61	5.12	5.68	6.27
55 (12.78)	TCG	89.40	84.60	79.70	74.70	69.50	64.30	58.70	52.80
	SDT	83.40	92.00	100.60	109.20	117.80	126.40	134.80	143.10
	KW	3.03	3.38	3.78	4.21	4.68	5.19	5.74	6.33

* AHRI listing applies only to systems shown in Combination Ratings table.

KW – Outdoor Unit Kilowatts Only.

SDT – Saturated Temperature Leaving Compressor (°F/°C)

SST – Saturated Temperature Entering Compressor (°F/°C)

TCG – Gross Cooling Capacity (1000 Btuh)

GUIDE SPECIFICATIONS
GENERAL

System Description

Outdoor-mounted, air-cooled, split-system air conditioner unit suitable for ground or rooftop installation. Unit consists of a hermetic compressor, an air-cooled coil, propeller-type condenser fan, and a control box. Unit will discharge supply air upward as shown on contract drawings. Unit will be used in a refrigeration circuit to match up to a packaged fan coil or coil unit.

Quality Assurance

— Unit will be rated in accordance with the latest edition of AHRI Standard 210.

— Unit will be certified for capacity and efficiency, and listed in the latest AHRI directory.

— Unit construction will comply with latest edition of ANSI/ ASHRAE and with NEC.

— Unit will be constructed in accordance with UL standards and will carry the UL label of approval. Unit will have c-UL approval.

— Unit cabinet will be capable of withstanding Federal Test
Method Standard No. 141 (Method 6061) 500-hr salt spray test.

— Air-cooled condenser coils will be leak tested at 150 psig and pressure tested at 450 psig.

— Unit constructed in ISO9001 approved facility.

Delivery, Storage, and Handling

— Unit will be shipped as single package only and is stored and handled per unit manufacturer's recommendations.

Warranty (for inclusion by specifying engineer)

— U.S. and Canada only.

PRODUCTS

Equipment

Factory assembled, single piece, air-cooled air conditioner unit. Contained within the unit enclosure is all factory wiring, piping, controls, compressor, refrigerant charge Puron® (R-410A), and special features required prior to field start-up.

Unit Cabinet

— Unit cabinet will be constructed of galvanized steel, bonderized, and coated with a powder coat paint.

Fans

— Condenser fan will be direct-drive propeller type, discharging air upward.

— Condenser fan motors will be totally enclosed, 1-phase type with class B insulation and permanently lubricated bearings. Shafts will be corrosion resistant.

— Fan blades will be statically and dynamically balanced.

— Condenser fan openings will be equipped with coated steel wire safety guards.

Compressor

— Compressor will be hermetically sealed.

— Compressor will be mounted on rubber vibration isolators.

Condenser Coil

— Condenser coil will be air cooled.

— Coil will be constructed of aluminum fins mechanically bonded to copper tubes which are then cleaned, dehydrated, and sealed.

— ArmorPlate coating - Aluminum fin material is pre-coated on both sides with a corrosion protective epoxy phenolic coating.

Refrigeration Components

— Refrigeration circuit components will include liquid-line shutoff valve with sweat connections, vapor-line shutoff valve with sweat connections, system charge of Puron® (R-410A) refrigerant, and compressor oil.

— Unit will be equipped with high-pressure switch, low pressure switch and filter drier for Puron refrigerant.

Operating Characteristics

— The capacity of the unit will meet or exceed _____ Btuh at a suction temperature of _____ °F/°C. The power consumption at full load will not exceed _____ kW.

— Combination of the unit and the evaporator or fan coil unit will have a total net cooling capacity of _____ Btuh or greater at conditions of _____ CFM entering air temperature at the evaporator at _____ °F/°C wet bulb and _____ °F/°C dry bulb, and air entering the unit at _____ °F/°C.

— The system will have a SEER of _____ Btuh/watt or greater at DOE conditions.

Electrical Requirements

— Nominal unit electrical characteristics will be _____ v, single phase, 60 hz. The unit will be capable of satisfactory operation within voltage limits of _____ v to _____ v.

— Unit electrical power will be single point connection.

— Control circuit will be 24v.

Special Features

— Refer to section of this literature identifying accessories and descriptions for specific features and available enhancements.

Copyright 2011 Carrier Corp. • 7310 W. Morris St. • Indianapolis, IN 46231 Printed in U.S.A. Edition Date: 08/11 Catalog No: 24ABB3C-4PD

Manufacturer reserves the right to change, at any time, specifications and designs without notice and without obligations.

Replaces: 24ABB3C-3PD