24ACB3
Performance™ 13 Series Air Conditioner with Puron® Refrigerant
1–1/2 To 5 Nominal Tons (Size 18 To 60)

Carrier
turn to the experts™

Product Data

Puron

Performance™ SERIES

Carrier's Air Conditioners with non-ozone depleting Puron® refrigerant provide a collection of features unmatched by any other family of equipment.

NOTE: Ratings contained in this document are subject to change at any time. Always refer to the AHRI directory (www.ahridirectory.org) for the most up-to-date ratings information.

INDUSTRY LEADING FEATURES / BENEFITS

EFFICIENCY

- 13 SEER/11 EER
- Microtube Technology™ refrigeration system
- Indoor air quality accessories available

SOUND

- Sound level as low as 70 dBA

COMFORT

- System supports Thermidistat™ Control or standard thermostat

RELIABILITY

- Non-ozone depleting Puron® refrigerant
- Front-seating service valves
- Scroll compressor
- Internal pressure-relief valve
- Internal thermal overload
- Low-pressure switch
- High-pressure switch
- Filter drier
- Balanced refrigeration system for maximum reliability

DURABILITY

WeatherArmor Ultra™ protection package:

- Solid, durable sheet metal construction
- Steel louver coil guard
- Baked-on, complete outer coverage, powder paint

APPLICATIONS

- Long-line - up to 250 feet (76.20 m) total equivalent length, up to 200 feet (60.96 m) condenser above evaporator, or up to 80 ft. (24.38 m) evaporator above condenser (See Longline Guide for more information.)
- Low ambient (down to -20°F/-28.9°C) with accessory kit

MODEL NUMBER NOMENCLATURE

1	2	3	4	5	6	7	8	9	10	11	12	13
N	N	A	A	A/N	N	N	N	A/N	A/N	A/N	N	N
2	**4**	**A**	**C**	**B**	**3**	**3**	**6**	**A**	**0**	**0**	**3**	1
Product Series		Product Family	Tier	Major Series	SEER	Cooling Capacity		Variations	Open	Open	Voltage	Minor Series
24 = AC		A= RES AC	C=Performance	B = Puron	3=13 SEER			A = Standard	0=Not Defined	0=Not Defined	3=208/230–1	0, 1, 2...

Puron

AHRI CERTIFIED™ www.ahridirectory.org

Use of the AHRI Certified TM Mark indicates a manufacturer's participation in the program For verification of certification for individual products, go to www.ahridirectory.org.

Certified System ™

ISO 9001
QMI-SAI Global

c UL US

ENERGY STAR

This product has been designed and manufactured to meet Energy Star® criteria for energy efficiency when matched with appropriate coil components. However, proper refrigerant charge and proper air flow are critical to achieve rated capacity and efficiency. Installation of this product should follow all manufacturing refrigerant charging and air flow instructions. **Failure to confirm proper charge and air flow may reduce energy efficiency and shorten equipment life.**

STANDARD FEATURES

Feature	**18**	**24**	**30**	**36**	**42**	**48**	**60**
Puron Refrigerant	X	X	X	X	X	X	X
13 SEER / 11 EER	X	X	X	X	X	X	X
Scroll Compressor	X	X	X	X	X	X	X
Louvered Coil Guard	X	X	X	X	X	X	X
Field–Installed Filter Drier	X	X	X	X	X	X	X
Front–Seating Service Valves	X	X	X	X	X	X	X
Internal Pressure–Relief Valve	X	X	X	X	X	X	X
Internal Thermal Overload	X	X	X	X	X	X	X
Long Line capability	X	X	X	X	X	X	X
Low Ambient capability with Kit	X	X	X	X	X	X	X
Low–Pressure Switch	X	X	X	X	X	X	X
High–Pressure Switch	X	X	X	X	X	X	X
Compressor Sound Blanket	X	X	X	X	X	X	X

X = Standard

PHYSICAL DATA

UNIT SIZE SERIES	18–32	24–32	30–32	36–32	42–30	48–30	60–31
Compressor Type	Scroll						
REFRIGERANT	Puron® (R–410A)						
Control	TXV (Puron® Hard Shutoff)						
Factory Charge lb (kg)	3.15 (1.43)	4.40 (2.00)	5.12 (2.32)	5.32 (2.41)	5.84 (2.65)	8.00 (3.63)	8.44 (3.83)
Required Charge lb (kg)‡	4.20 (1.91)	– –	– –	– –	– –	– –	– –
COND FAN	Propeller Type, Direct Drive						
Air Discharge	Vertical						
Air Qty (CFM)	1792	2196	2196	3700	3170	3365	4050
Motor HP	1/12	1/10	1/10	1/4	1/5	1/4	1/4
Motor RPM	1100	1100	1100	1100	825	825	825
COND COIL							
Face Area (Sq. ft.)	8.40	9.85	11.49	15.09	17.25	21.56	25.15
Fins per In.	20	25	25	25	25	25	25
Rows	1	1	1	1	1	1	1
Circuits	3	5	3	4	4	5	5
VALVE CONNECT. (In. ID)							
Vapor	3/4	3/4	3/4	7/8	7/8	7/8	7/8
Liquid	3/8						
REFRIGERANT TUBES (In. OD)							
Rated Vapor*	3/4	3/4	3/4	7/8	7/8	7/8	1–1/8
Liquid	3/8						

‡ For 15 ft. Line set

"– –" = Factory charge and required charge values are equal

*Units are rated with 25 ft (7.6 m) of lineset length. See *Vapor Line Sizing and Cooling Capacity Loss* table when using other sizes and lengths of lineset.

Note: See unit Installation Instruction for proper installation.

OUTDOOR UNIT CONNECTED TO A FACTORY APPROVED INDOOR UNIT

Check piston size shipped with indoor unit to see if it matches required indoor piston size. If it does not match, replace indoor piston with correct piston size in table below:

OUTDOOR UNIT SIZE – SERIES	FAN COIL	PISTON SIZE BY OUTDOOR MODEL
018–32	FB4CNF*	49
024–32	FB4CNF*	55
030–32	FB4CNF*	61
036–32	FB4CNF*	70
042–30	FB4CNF*	76
048–31	FB4CNF*	78

* Ratings contained in this document are subject to change at any time. Always refer to the AHRI directory (www.ahridirectory.org) for the most up–to–date ratings information.

NOTE: Pistons shipped with outdoor units are only qualified and approved with the above listed fan coils. The piston included with the FFMANP* and FPMAN* fan coils are unique to those products and CANNOT be replaced with the piston shipped with outdoor unit. Refer to the AHRI directory (www.ahridirectory.org) to check if your combination can use a piston or requires an accessory TXV.

REFRIGERANT PIPING LENGTH LIMITATIONS

Liquid Line Sizing and Maximum Total Equivalent Lengths† for Cooling Only Systems with Puron® Refrigerant:

The maximum allowable length of a residential split system depends on the liquid line diameter and vertical separation between indoor and outdoor units.

See Table below for liquid line sizing and maximum lengths :

Maximum Total Equivalent Length
Outdoor Unit BELOW Indoor Unit

Size	Liquid Line Connection	Liquid Line Diam. w/ TXV	AC with Puron Refrigerant Maximum Total Equivalent Length†: Outdoor unit BELOW Indoor Vertical Separation ft (m)								
			0–5 (0–1.5)	6–10 (1.8–3.0)	11–20 (3.4–6.1)	21–30 (6.4–9.1)	31–40 (9.4–12.2)	41–50 (12.5–15.2)	51–60 (15.5–18.3)	61–70 (18.6–21.3)	71–80 (21.6–24.4)
18	3/8	1/4	150	150	125	100	100	75	– –	– –	– –
		5/16	250*	250*	250*	250*	250*	250*	250*	225*	150
		3/8	250*	250*	250*	250*	250*	250*	250*	250*	250*
24	3/8	1/4	75	75	75	50	50	– –	– –	– –	– –
		5/16	250*	250*	250*	250*	250*	225*	175	125	100
		3/8	250*	250*	250*	250*	250*	250*	250*	250*	250*
30	3/8	1/4	30	– –	– –	– –	– –	– –	– –	– –	– –
		5/16	175	225*	200	175	125	100	75	– –	– –
		3/8	250*	250*	250*	250*	250*	250*	250*	250*	250*
36	3/8	5/16	175	150	150	100	100	100	75	– –	– –
		3//8	250*	250*	250*	250*	250*	250*	250*	250*	250*
42	3/8	5/16	125	100	100	75	75	50	– –	– –	– –
		3/8	250*	250*	250*	250*	250*	250*	250*	250*	150
48	3/8	3/8	250*	250*	250*	250*	250*	250*	230	160	– –
60	3/8	3/8	250*	250*	250*	225*	190	150	110	– –	– –

*** Maximum actual length not to exceed 200 ft (61 m)**

† Total equivalent length accounts for losses due to elbows or fitting. See the Long Line Guideline for details.

– – = outside acceptable range

Maximum Total Equivalent Length
Outdoor Unit ABOVE Indoor Unit

Size	Liquid Line Connection	Liquid Line Diam. w/ TXV	AC with Puron Refrigerant Maximum Total Equivalent Length†: Outdoor unit ABOVE Indoor Vertical Separation ft (m)							
			25 (7.6)	26–50 (7.9–15.2)	51–75 (15.5–22.9)	76–100 (23.2–30.5)	101–125 (30.8–38.1)	126–150 (38.4–45.7)	151–175 (46.0–53.3)	176–200 (53.6–61.0)
18	3/8	1/4	175	250*	250*	250*	250*	250*	250*	250*
		5/16	250*	250*	250*	250*	250*	250*	250*	250*
		3/8	250*	250*	250*	250*	250*	250*	250*	250*
24	3/8	1/4	100	125	175	200	225*	250*	250*	250*
		5/16	250*	250*	250*	250*	250*	250*	250*	250*
		3/8	250*	250*	250*	250*	250*	250*	250*	250*
30	3/8	1/4	30	– –	– –	– –	– –	– –	– –	– –
		5/16	250*	250*	250*	250*	250*	250*	250*	250*
		3/8	250*	250*	250*	250*	250*	250*	250*	250*
36	3/8	5/16	225*	250*	250*	250*	250*	250*	250*	250*
		3/8	250*	250*	250*	250*	250*	250*	250*	250*
42	3/8	5/16	175	200	250*	250*	250*	250*	250*	250*
		3/8	250*	250*	250*	250*	250*	250*	250*	250*
48	3/8	3/8	250*	250*	250*	250*	250*	250*	250*	250*
60	3/8	3/8	250*	250*	250*	250*	250*	250*	250*	250*

*** Maximum actual length not to exceed 200 ft (61 m)**

† Total equivalent length accounts for losses due to elbows or fitting. See the Long Line Guideline for details.

– – = outside acceptable range

REFRIGERANT CHARGE ADJUSTMENTS

Liquid Line Size	Puron Charge oz/ft (g/m)
3/8	0.60 (17.74) (Factory charge for lineset = 9 oz / 266.16 g)
5/16	0.40 (11.83)
1/4	0.27 (7.98)

Units are factory charged for 15 ft (4.6 m) of 3/8" liquid line*. The factory charge for 3/8" lineset 9 oz. When using other length or diameter liquid lines, charge adjustments are required per the chart above.

Charging Formula:

[(Lineset oz/ft x total length) – (factory charge for lineset)] = charge adjustment

Example 1: System has 15 ft of line set* using existing 1/4" liquid line. What charge adjustment is required?

Formula: (.27 oz/ft x 15ft) – (9 oz) = (-4.95) oz.

Net result is to remove 4.95 oz of refrigerant from the system

Example 2: System has 45 ft of existing 5/16" liquid line. What is the charge adjustment?

Formula: (.40 oz/ft. x 45ft) – (9 oz.) = 9 oz.

Net result is to add 9 oz of refrigerant to the system

NOTE: Conditions must be favorable for charging by subcooling method. Indoor temperature must be 70°F to 80°F (21.1°C to 26.7°C), and outdoor temperature must be 70°F to 100°F (21.1°C to 37.8°C). If outside these conditions, adjust charge for long line sets by weigh-in method.

* When applicable. Refer to Physical Data Table in this PD and to the Installation Instructions for more information.

LONG LINE APPLICATIONS

An application is considered Long Line, when the refrigerant level in the system requires the use of accessories to maintain acceptable refrigerant management for systems reliability. See Accessory Usage Guideline table for required accessories. Defining a system as long line depends on the liquid line diameter, actual length of the tubing, and vertical separation between the indoor and outdoor units.

For Air Conditioner systems, the chart below shows when an application is considered Long Line.

AC with Puron® Refrigerant Long Line Description ft (m) Beyond these lengths, a TXV is required

Total Length	Outdoor Unit Above or Below Indoor Unit
TXV required beyond 50 ft. (15.2 m)	TXV required beyond 20 ft. (6.1 m)

AC with Puron® Refrigerant Long Line Description ft (m) (Beyond these lengths, long line accessories are required)

Liquid Line Size	Units On Same Level	Outdoor Below Indoor	Outdoor Above Indoor
1/4 + TXV	No accessories needed within allowed lengths	No accessories needed within allowed lengths	175 (53.3)
5/16 + TXV	120 (36.6)	50 (15.2) vertical or 120 (36.6) total	120 (36.6)
3/8 + TXV	80 (24.4)	35 (10.7) vertical or 80 (24.4) total	80 (24.4)

Note: See Residential Piping and Long Line Guideline for details

VAPOR LINE SIZING AND COOLING CAPACITY LOSS

Acceptable vapor line diameters provide adequate oil return to the compressor while avoiding excessive capacity loss. The suction line diameters shown in the chart below are acceptable for AC systems with Puron refrigerant:

Vapor Line Sizing and Cooling Capacity Losses — Puron® Refrigerant 1-Stage Air Conditioner Applications

Unit Nominal Size (Btuh)	Maximum Liquid Line Diameters (In. OD)	Vapor Line Diameters (In. OD)	Cooling Capacity Loss (%) Total Equivalent Line Length ft. (m) 1-Stage AC with Puron								
			26–50 (7.9–15.2)	51–80 (15.5–24.4)	81–100 (24.7–30.5)	101–125 (30.8–38.1)	126–150 (38.4–45.7)	151–175 (46.0–53.3)	176–200 (53.6–61.0)	201–225 (61.3–68.6)	226–250 (68.9–76.2)
18	3/8	1/2	1	2	3	5	6	7	8	9	11
		5/8	0	1	1	1	2	2	2	3	3
		3/4	0	0	0	0	1	1	1	1	1
24	3/8	5/8	0	1	2	2	3	3	4	5	5
		3/4	0	0	1	1	1	1	1	2	2
		7/8	0	0	0	0	0	1	1	1	1
30	3/8	5/8	1	2	3	3	4	5	6	7	8
		3/4	0	0	1	1	1	2	2	2	3
		7/8	0	0	0	0	1	1	1	1	1
36	3/8	5/8	1	2	4	5	6	8	9	10	12
		3/4	0	1	1	2	2	3	3	4	4
		7/8	0	0	0	1	1	1	1	2	2
42	3/8	3/4	0	1	2	2	3	4	4	5	6
		7/8	0	0	1	1	1	2	2	2	3
		1 1/8	0	0	0	0	0	0	0	0	0
48	3/8	3/4	0	1	2	3	4	5	5	6	7
		7/8	0	0	1	1	2	2	2	3	3
		1 1/8	0	0	0	0	0	0	0	1	1
60	3/8	3/4	1	2	4	5	6	7	9	10	11
		7/8	0	1	2	2	3	4	4	5	5
		1 1/8	0	0	0	1	1	1	1	1	1

Applications in this area may be long line and may have height restrictions. See the *Residential Piping and Long Line Guideline*.

ACCESSORIES

KIT NUMBER	KIT NAME	18–32	24–32	30–32	36–32	42–30	48–30	60–31
KAACH1401AAA	CRANKCASE HEATER	X	X	X	X			
KAACH1201AAA	CRANKCASE HEATER					X	X	X
KSACY0101AAA	CYCLE PROTECTOR	X	X	X	X	X	X	X
KAAFT0101AAA	FREEZE THERMOSTAT	X	X	X	X	X	X	X
KSAHS1501AAA	HARD START (CAP / RELAY)	X	X	X	X	X	X	X
KSALA0301410	LOW AMBIENT KIT	X	X	X	X	X	X	X
HC40GE228	MOTOR, FAN BALL BEARING						X	X
KSALA0601AAA	MOTORMASTER 230V	X	X	X	X	X	X	X
KAALS0201LLS	SOLENOID VALVE	X	X	X	X	X	X	X
KSASF0201AAA	SUPPORT FEET KIT	X	X	X				
KSASF0101AAA	SUPPORT FEET KIT				X	X	X	X
KAATD0101TDR	TIME DELAY RELAY	X	X	X	X	X	X	X
KSATX0201PUR	TXV PURON	X	X					
KSATX0301PUR	TXV PURON			X	X	X		
KSATX0401PUR	TXV PURON						X	
KSATX0501PUR	TXV PURON							X
KSBTX0201PUR	TXV PURON	X	X					
KSBTX0301PUR	TXV PURON			X	X	X		
KSBTX0401PUR	TXV PURON						X	X
KAAWS0101AAA	WINTER START	X	X	X	X	X	X	X

x = Accessory

ACCESSORY THERMOSTATS

THERMOSTAT / SUBBASE PKG.	DESCRIPTION
TP–WEM01	Côr™ Thermostat
TP–PRH01–A	edge™ Programmable Relative Humidity Thermostat
TP–PAC01	edge™ Programmable Thermostat
TP–NRH01	edge™ Non–Programmable Relative Humidity Thermostat
TP–NAC01	edge™ Non–Programmable Thermostat
TC–WHS01	Wi–Fi® Thermostat
TC–PAC01	Programmable Thermostat
TC–NAC01	Non–Programmable Thermostat
TCSNAC01	Non–Programmable Standard Screen Thermostat

THERMOSTAT ACCESSORIES		
PART NUMBER	**DESCRIPTION**	**THERMOSTATS USED WITH**
TP–EXP	edge™ EXP® Card	Programmable edge™ thermostats
TSTATCCSEN01–B	Outdoor Air Temperature Sensor	TP–Pxx, TP–Nxx
TSTATXXCNV10	Thermostat Conversion Kit (4 to 5 wire)–10 pack	All Carrier® branded thermostats
TX–MBP01	Medium Decorative Backplate	TC–Nxx
TX–LBP01	Large Decorative Backplate	TP–Pxx, TP–Nxx, TC–Pxx

ACCESSORY USAGE GUIDELINE

ACCESSORY	REQUIRED FOR LOW–AMBIENT COOLING APPLICATIONS (Below 55°F/12.8°C)	REQUIRED FOR LONG LINE APPLICATIONS* (Over 80 ft./24.38 m)	REQUIRED FOR SEA COAST APPLICATIONS (Within 2 miles/3.22 km)
Ball Bearing Fan Motor	Yes†	No	No
Compressor Start Assist Capacitor and Relay	Yes	Yes	No
Crankcase Heater	Yes	Yes	No
Evaporator Freeze Thermostat	Yes	No	No
Hard Shut–Off TXV	Yes	Yes	Yes
Liquid Line Solenoid Valve	No	No	No
Motor Master® Control or Low–ambient Pressure Switch	Yes	No	No
Support Feet	Recommended	No	Recommended
Winter Start Control	Yes	No	No

* For tubing line sets between 80 and 200 ft. (24.38 and 60.96 m) and/or 35 ft. (10.67 m) vertical differential, refer to Residential Split–System Longline Application Guideline.

† Required for Low–Ambient Controller (full modulation feature) MotorMaster® Control.

ACCESSORY DESCRIPTION AND USAGE (LISTED ALPHABETICALLY)

1. Ball-Bearing Fan Motor

A fan motor with ball bearings which permits speed reduction while maintaining bearing lubrication.

Usage Guideline:

Required on all units when using MotorMaster®

2. Compressor Start Assist - Capacitor and Relay

Start capacitor and relay gives a ”hard” boost to compressor motor at each start up.

Usage Guideline:

Required for single-phase scroll compressors in the following applications:

Long line

Low-ambient cooling

Suggested for all compressors in areas with a history of low voltage problems.

3. Crankcase Heater

An electric resistance heater which mounts to the base of the compressor to keep the lubricant warm during off cycles. Improves compressor lubrication on restart and minimizes the chance of liquid slugging.

Usage Guideline:

Required in Low-ambient cooling applications.

Required in long line applications.

Suggested in all commercial applications.

4. Cycle Protector

The cycle protector is designed to prevent compressor short cycling. This control provides an approximate 5-minute delay after power to the compressor has been interrupted for any reason, including power outage, protector control trip, thermostat jiggling, or normal cycling.

5. Evaporator Freeze Thermostat

An SPST temperature-actuated switch that stops unit operation when evaporator reaches freeze-up conditions.

Usage Guideline:

Required when Low-ambient kit has been added.

6. Low-Ambient Pressure Switch Kit

A long life pressure switch which is mounted to outdoor unit service valve. It is designed to cycle the outdoor fan motor in order to maintain head pressure within normal operating limits. The control will maintain working head pressure at low-ambient temperatures down to 0°F (-17.8°C)when properly installed.

Usage Guideline:

A Low-Ambient Pressure Switch must be used when cooling operation is at outdoor temperatures below 55°F (12.8°C) to a minimum of 0°F (-17.8°C).

Suggested for all commercial applications.

7. MotorMaster® Low-Ambient Controller

A fan-speed control device activated by a temperature sensor, designed to control condenser fan motor speed in response to the saturated, condensing temperature during operation in cooling mode only. For outdoor temperatures down to -20°F (-28.9°C), it maintains condensing temperature at 100°F ±10°F (37.8°C ± 6.5°C).

Usage Guideline:

A MotorMaster® Low Ambient Controller or Low-Ambient Pressure Switch must be used when cooling operation is used at outdoor temperatures below 55°F (12.8°C).

Suggested for all commercial applications.

8. Outdoor Air Temperature Sensor

Designed for use with Carrier Thermostats listed in this publication. This device enables the thermostat to display the outdoor temperature. This device also

is required to enable special thermostat features such as auxiliary heat lock out.

Usage Guideline:

Suggested for all Carrier thermostats listed in this publication.

9. Support Feet

Four or five astick-on plastic feet that raise the unit 4 in. (101.6 mm) above the mounting pad. This allows sand, dirt, and other debris to be flushed from the unit base, minimizing corrosion.

Usage Guideline:

Suggested in the following applications:

Coastal installations.

Windy areas or where debris is normally circulating.

Rooftop installations.

For improved sound ratings.

10. Thermostatic Expansion Valve (TXV)

A modulating flow-control valve which meters refrigerant liquid flow rate into the evaporator in response to the superheat of the refrigerant gas leaving the evaporator.

Kit includes valve, adapter tubes, and external equalizer tube. Hard shutoff types are available.

NOTE: When using a hard shutoff TXV with single phase reciprocating compressors, a Compressor Start Assist Capacitor and Relay is required.

Usage Guideline:

Accessory required to meet AHRI rating and system reliability, where indoor not equipped.

Hard shutoff TXV or LLS required in air conditioner long line applications.

Required for use on all zoning systems.

11. Time-Delay Relay

An SPST delay relay which briefly continues operation of indoor blower motor to provide additional cooling after the compressor cycles off.

NOTE: Most indoor unit controls include this feature. For those that do not, use the guideline below.

Usage Guideline:

Accessory required to meet AHRI rating, where indoor not equipped.

12. Winter Start Control

This control is designed to alleviate nuisance opening of the low-pressure switch by bypassing it for the first 3 minutes of operation.

AHRI RATINGS

For AHRI ratings certificates, please refer to the AHRI directory **www.ahridirectory.org**
Additional ratings and system combinations can be accessed via the Carrier database at: **www.MyCarrierRatings.com**

For performance data at specific application &/or design conditions with various indoor unit combinations, the equipment performance calculator can be accessed at : **http://rpmob.wrightsoft.com/**

ELECTRICAL DATA

UNIT SIZE – VOLTAGE, SERIES	V/PH	OPER VOLTS*		COMPR		FAN	MCA	MAX FUSE** or CKT BRK AMPS
		MAX	MIN.	LRA	RLA	FLA		
18–32	208/230/1	253	197	47.5	9.0	0.5	11.8	20
24–32				62.9	10.9	0.7	14.3	25
30–32				67.8	12.8	0.6	16.6	25
36–32				75.0	14.7	1.4	19.8	30
42–30				112.0	17.9	1.2	23.6	40
48–30				109.0	19.9	1.2	26.2	40
60–31				134.0	26.4	1.20	34.2	50

* Permissible limits of the voltage range at which the unit will operate satisfactorily.
** Time–Delay fuse.
FLA – Full Load Amps
LRA – Locked Rotor Amps
MCA – Minimum Circuit Amps
RLA – Rated Load Amps
NOTE: Control circuit is 24–V on all units and requires external power source. Copper wire must be used from service disconnect to unit. All motors/compressors contain internal overload protection.
Complies with 2007 requirements of ASHRAE Standards 90.1

A-WEIGHTED SOUND POWER (dBA)

UNIT SIZE – VOLTAGE, SERIES	STANDARD RATING (dBA)	TYPICAL OCTAVE BAND SPECTRUM (dBA, without tone adjustment)						
		125	250	500	1000	2000	4000	8000
18–32	70	50.1	55.6	61.3	67.4	63.2	60.4	52.8
24–32	72	52.9	62.3	65.0	67.8	64.0	61.9	55.3
30–32	74	52.8	62.4	65.0	69.2	68.6	63.0	55.7
36–32	72	58.7	65.1	66.4	65.6	62.6	60.0	52.3
42–30	74	55.0	64.0	68.0	68.5	64.5	60.0	54.0
48–30	74	52.5	62.5	65.5	69.0	63.5	60.5	56.0
60–31	74	54.0	59.0	65.5	67.5	63.5	60.0	55.5

NOTE: Tested in accordance with AHRI Standard 270–2008 (not listed in AHRI).

CHARGING SUBCOOLING (TXV-TYPE EXPANSION DEVICE)

UNIT SIZE–VOLTAGE, SERIES	REQUIRED SUBCOOLING °F (°C)
18–32	15 (8.33)
24–32	13 (7.22)
30–32	14 (7.78)
36–32	10 (5.56)
42–30	10 (5.56)
48–30	17 (9.44)
60–31	11 (6.11)

DIMENSIONS

UNIT	SERIES	ELECTRICAL CHARACTERISTICS				A		B		C		D		E		F		G		H		I		J		K		OPERATING WEIGHT		SHIPPING WEIGHT		SHIPPING LENGTH / WIDTH (Sq.)		SHIPPING HEIGHT	
		208-230-1-60	208/230-3-60	460-3-60	575-3-60	INCH	MM	INCH	MM	INCH	MM	INCH	MM	INCH	MM	INCH	MM	INCH	MM	INCH	MM	INCH	MM	INCH	MM	INCH	MM	Lbs	Kgs	Lbs	Kgs	INCH	MM	INCH	MM
24ACB318A	2	Y	N	N	N	23 1/8	587.3	25 5/16	642.9	3/4	19.1	4 7/16	113.0	18 1/16	459.0	7 13/16	197.9	5/16	7.9	3	76.2	11 1/2	292.1	13	330.2	12 1/2	317.5	117	53.1	130	59.0	25 1/4	641.5	29 3/4	755.8
24ACB324A	2	Y	N	N	N	25 3/4	654.0	25 5/16	642.4	3/4	19.1	4 7/16	113.0	21 1/4	539.9	9 1/8	231.3	5/16	7.9	3	76.2	14	355.6	15	381.0	11 1/2	292.1	127	57.6	150	68.0	27 7/8	708.2	29 3/4	755.8
24ACB330A	2	Y	N	N	N	25 3/4	654.0	28 11/16	728.7	3/4	19.1	4 7/16	113.0	21 1/4	539.9	9 1/8	231.3	5/16	7.9	3	76.2	13	330.2	13 1/2	342.9	13	330.2	138	62.6	162	73.5	27 7/8	708.2	33 3/16	843.1
24ACB336A	2	Y	N	N	N	31 3/16	792.5	28 11/16	728.7	7/8	22.2	6 9/16	166.1	24 11/16	626.3	9 1/8	231.3	5/16	7.9	3	76.2	15 1/2	393.7	16	406.4	14	355.6	169	76.7	194	88.0	33 5/16	846.6	33 3/16	843.1
24ACB342A	0	Y	N	N	N	31 3/16	792.5	32 1/16	815.1	7/8	22.2	6 9/16	166.1	24 11/16	626.3	9 1/8	231.3	5/16	7.9	3	76.2	15 3/4	400.1	16 1/4	412.8	13 3/4	349.3	210	95.3	238	108.0	33 5/16	846.6	36 5/8	929.5
24ACB348A	0	Y	N	N	N	31 3/16	792.5	38 7/8	987.8	7/8	22.2	6 9/16	166.1	24 11/16	626.3	9 1/8	231.3	5/16	7.9	3	76.2	14 1/4	362.0	17 1/4	438.2	19 1/4	489.0	236	107.0	264	119.7	33 5/16	846.6	43 3/8	1102.2
24ACB360A	1	Y	N	N	N	35	889.0	38 7/8	987.8	7/8	22.2	6 9/16	166.1	28 7/16	722.8	9 1/8	231.3	5/16	7.9	3	76.2	20 5/8	523.9	19 3/4	501.7	18 3/8	466.7	261	118.4	295	133.8	37 1/8	943.1	43 3/8	1102.2

Y=YES
N=NO

NOTES:

1. ALLOW 24" (609.6) CLEARANCE TO SERVICE SIDE OF UNIT, 48" (1219.2) ABOVE UNIT, 6" (152.4) ON ONE SIDE, 12" (304.8) ON REMAINING SIDE, AND 24" (609.6) BETWEEN UNITS FOR PROPER AIRFLOW.
2. CENTER OF GRAVITY .
3. SERIES DESIGNATION IS THE 13TH POSITION OF THE UNIT MODEL NUMBER.

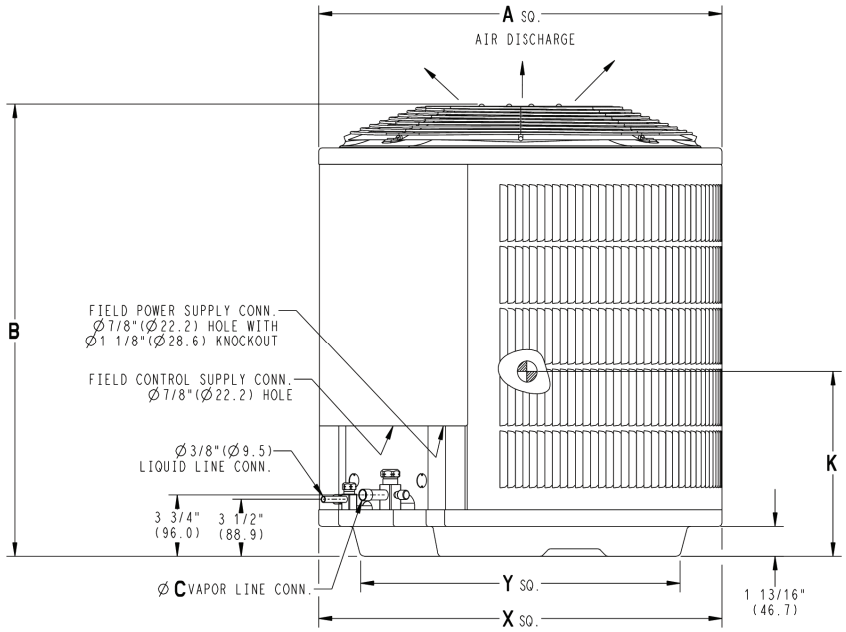

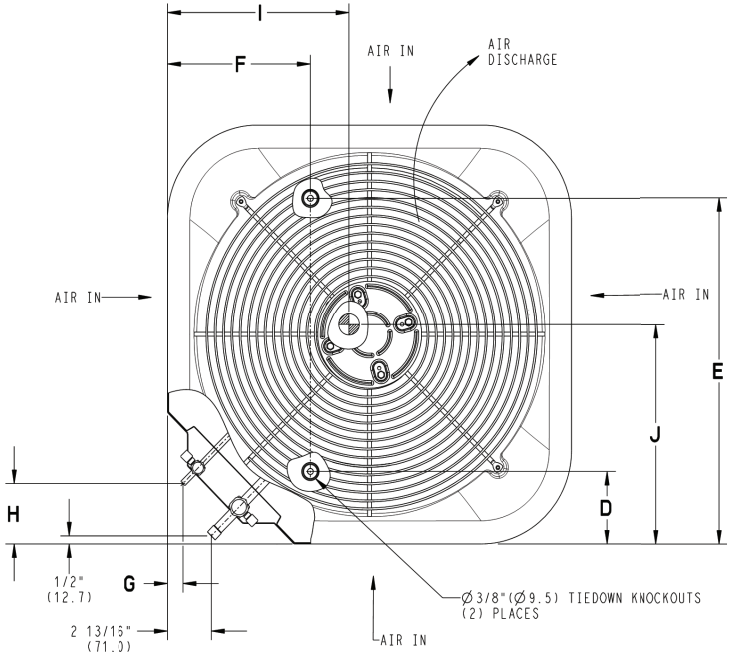

UNIT SIZE	"X" MINIMUM GROUND MOUNTING PAD APPLICATION DIMENSIONS		"Y" MINIMUM ROOF-TOP MOUNTING PAD APPLICATION DIMENSIONS	
18	23 1/8	587.3	17 7/8	454.6
24,30	25 3/4	654.0	20 7/16	518.5
36,42,48	31 3/16	792.5	22 15/16	583.2
60	35	889.0	26 3/4	679.7

NOTE: ALL DIMENSIONS IN INCH (MM)

U.S. EXPORT CLASSIFICATION: EAR99

SD5420-4 REV. D

CLEARANCES

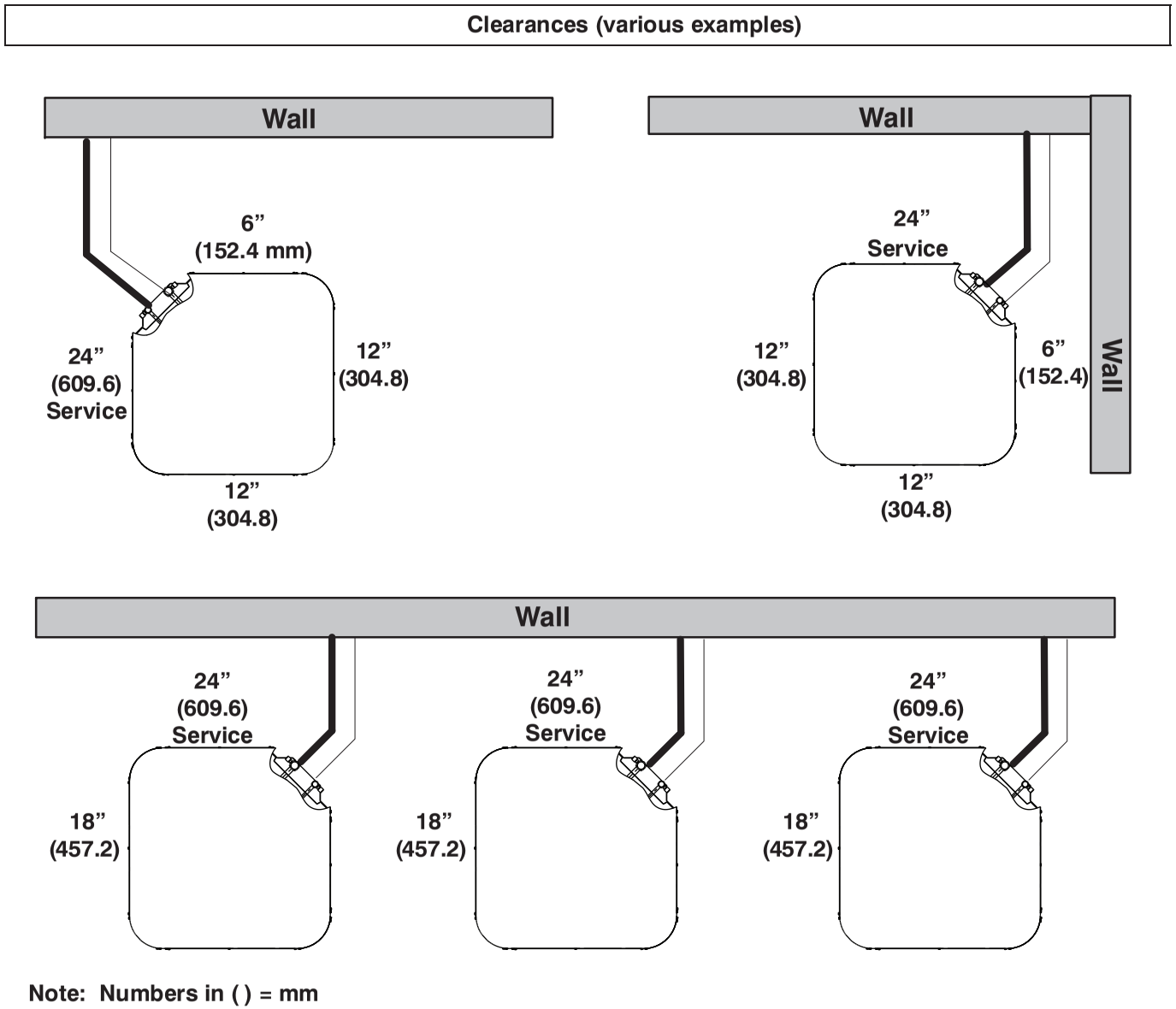

IMPORTANT: When installing multiple units in an alcove, roof well, or partially enclosed area, ensure there is adequate ventilation to prevent re-circulation of discharge air.

A07833

DETAILED COOLING CAPACITIES#

EVAPORATOR AIR		CONDENSER ENTERING AIR TEMPERATURES °F (°C)														
		75 (23.9)			85 (29.4)			95 (35)			105 (40.6)			115 (46.1)		
CFM	EWB °F (°C)	Capacity MBtuh Total	Capacity MBtuh Sens‡	Total Sys. KW**	Capacity MBtuh Total	Capacity MBtuh Sens‡	Total Sys. KW**	Capacity MBtuh Total	Capacity MBtuh Sens‡	Total Sys. KW**	Capacity MBtuh Total	Capacity MBtuh Sens‡	Total Sys. KW**	Capacity MBtuh Total	Capacity MBtuh Sens‡	Total Sys. KW**
24ACB318ABN32 Outdoor Section With CNPV*2414AL* Indoor Section																
525	72 (22.2)	20.77	10.24	1.24	19.95	9.96	1.39	19.07	9.66	1.56	18.09	9.33	1.76	17.01	8.96	1.98
	67 (19.4)	19.01	12.71	1.25	18.21	12.41	1.40	17.37	12.09	1.57	16.44	11.75	1.77	15.41	11.39	1.99
	63 (17.2)††	17.69	12.24	1.26	16.91	11.92	1.41	16.09	11.59	1.58	15.20	11.24	1.77	14.20	10.87	1.99
	62 (16.7)	17.46	15.15	1.26	16.72	14.80	1.41	15.94	14.49	1.58	15.21	15.08	1.77	14.37	14.37	1.99
	57 (13.9)	17.10	17.10	1.26	16.48	16.48	1.41	15.83	15.83	1.58	15.13	15.13	1.77	14.35	14.35	1.99
600	72 (22.2)	21.08	10.74	1.27	20.25	10.46	1.42	19.34	10.15	1.59	18.33	9.82	1.79	17.21	9.44	2.01
	67 (19.4)	19.30	13.54	1.28	18.49	13.23	1.43	17.60	12.93	1.60	16.62	12.61	1.80	15.59	12.26	2.02
	63 (17.2)††	17.98	13.01	1.29	17.17	12.69	1.44	16.30	12.38	1.61	15.39	12.06	1.80	14.41	11.65	2.02
	62 (16.7)	17.85	16.29	1.29	17.23	15.65	1.43	16.51	16.37	1.60	15.71	15.71	1.80	14.88	14.88	2.02
	57 (13.9)	17.75	17.75	1.29	17.10	17.10	1.44	16.42	16.42	1.61	15.68	15.68	1.80	14.86	14.86	2.02
675	72 (22.2)	21.29	11.21	1.29	20.45	10.93	1.45	19.53	10.62	1.62	18.50	10.28	1.82	17.36	9.89	2.04
	67 (19.4)	19.50	14.36	1.31	18.65	14.08	1.46	17.76	13.80	1.63	16.82	13.42	1.83	15.78	13.00	2.05
	63 (17.2)††	18.17	13.78	1.32	17.33	13.50	1.47	16.49	13.17	1.64	15.59	12.76	1.83	14.61	12.32	2.05
	62 (16.7)	18.39	16.74	1.31	17.64	17.64	1.46	16.93	16.93	1.63	16.16	16.16	1.83	15.30	15.30	2.05
	57 (13.9)	18.28	18.28	1.31	17.61	17.61	1.46	16.90	16.90	1.63	16.14	16.14	1.83	15.28	15.28	2.05

EVAPORATOR AIR		CONDENSER ENTERING AIR TEMPERATURES °F (°C)														
		75 (23.9)			85 (29.4)			95 (35)			105 (40.6)			115 (46.1)		
CFM	EWB °F (°C)	Capacity MBtuh Total	Capacity MBtuh Sens‡	Total Sys. KW**	Capacity MBtuh Total	Capacity MBtuh Sens‡	Total Sys. KW**	Capacity MBtuh Total	Capacity MBtuh Sens‡	Total Sys. KW**	Capacity MBtuh Total	Capacity MBtuh Sens‡	Total Sys. KW**	Capacity MBtuh Total	Capacity MBtuh Sens‡	Total Sys. KW**
24ACB324ABN32 Outdoor Section With CNPV*2414AL* Indoor Section																
700	72 (22.2)	27.25	13.68	1.65	26.06	13.26	1.83	25.42	13.04	2.09	23.78	12.47	2.31	22.10	11.90	2.56
	67 (19.4)	24.87	16.90	1.65	23.80	16.48	1.84	22.68	16.05	2.05	21.79	15.71	2.37	20.31	15.15	2.59
	63 (17.2)††	23.14	16.27	1.66	22.14	15.85	1.85	21.09	15.42	2.06	20.07	15.00	2.32	18.78	14.48	2.60
	62 (16.7)	22.83	20.07	1.66	21.87	19.64	1.85	20.88	19.17	2.06	20.02	19.86	2.32	18.95	18.95	2.59
	57 (13.9)	22.38	22.38	1.66	21.60	21.60	1.85	20.77	20.77	2.06	20.01	20.01	2.36	18.91	18.91	2.59
800	72 (22.2)	27.61	14.35	1.68	26.41	13.93	1.87	25.79	13.72	2.13	24.06	13.14	2.34	22.56	12.63	2.62
	67 (19.4)	25.26	18.00	1.69	24.16	17.58	1.88	23.00	17.15	2.09	22.12	16.82	2.40	20.57	16.24	2.63
	63 (17.2)††	23.54	17.31	1.70	22.50	16.88	1.88	21.41	16.44	2.10	20.42	16.03	2.36	19.07	15.49	2.63
	62 (16.7)	23.36	21.53	1.70	22.54	20.81	1.88	21.55	21.55	2.10	20.72	20.72	2.36	19.62	19.62	2.63
	57 (13.9)	23.27	23.27	1.70	22.42	22.42	1.88	21.55	21.55	2.10	20.76	20.76	2.41	19.59	19.59	2.63
900	72 (22.2)	27.98	15.02	1.72	26.66	14.57	1.91	26.05	14.37	2.16	24.33	13.79	2.39	22.71	13.26	2.66
	67 (19.4)	25.55	19.06	1.73	24.42	18.64	1.92	23.24	18.20	2.13	22.16	17.79	2.39	20.75	17.25	2.66
	63 (17.2)††	23.83	18.29	1.74	22.83	17.88	1.92	21.66	17.41	2.13	20.62	16.99	2.40	19.28	16.44	2.67
	62 (16.7)	24.00	24.00	1.73	23.11	23.11	1.92	22.19	22.19	2.13	21.34	21.34	2.40	20.14	20.14	2.67
	57 (13.9)	23.97	23.97	1.73	23.08	23.08	1.92	22.13	22.13	2.13	21.30	21.30	2.39	20.13	20.13	2.67

See notes on page 15

DETAILED COOLING CAPACITIES# CONTINUED

EVAPORATOR AIR		CONDENSER ENTERING AIR TEMPERATURES °F (°C)														
		75 (23.9)			85 (29.4)			95 (35)			105 (40.6)			115 (46.1)		
CFM	EWB °F (°C)	Capacity MBtuh Total	Capacity MBtuh Sens‡	Total Sys. KW**	Capacity MBtuh Total	Capacity MBtuh Sens‡	Total Sys. KW**	Capacity MBtuh Total	Capacity MBtuh Sens‡	Total Sys. KW**	Capacity MBtuh Total	Capacity MBtuh Sens‡	Total Sys. KW**	Capacity MBtuh Total	Capacity MBtuh Sens‡	Total Sys. KW**
24ACB330ABN32 Outdoor Section With CNPV*3117AL* Indoor Section																
875	72 (22.2)	33.50	16.91	2.08	32.19	16.46	2.29	30.70	15.95	2.54	29.03	15.39	2.82	27.46	14.86	3.17
	67 (19.4)	30.64	21.05	2.08	29.42	20.59	2.29	28.01	20.05	2.53	26.45	19.47	2.81	24.75	18.84	3.13
	63 (17.2)††	28.61	20.29	2.07	27.42	19.80	2.29	26.06	19.25	2.53	24.61	18.66	2.81	23.01	18.03	3.13
	62 (16.7)	28.25	25.13	2.07	27.13	24.61	2.29	25.89	25.89	2.53	24.71	24.71	2.81	23.39	23.39	3.13
	57 (13.9)	27.91	27.91	2.07	26.95	26.95	2.28	25.86	25.86	2.53	24.67	24.67	2.81	23.36	23.36	3.13
1000	72 (22.2)	33.97	17.81	2.13	32.58	17.34	2.35	31.07	16.84	2.59	29.34	16.27	2.87	27.74	15.75	3.22
	67 (19.4)	31.09	22.51	2.13	29.82	22.03	2.34	28.40	21.50	2.58	26.78	20.90	2.86	25.05	20.28	3.19
	63 (17.2)††	29.06	21.64	2.13	27.84	21.15	2.34	26.45	20.59	2.58	24.94	19.99	2.86	23.30	19.34	3.18
	62 (16.7)	28.99	28.99	2.12	28.00	28.00	2.34	26.84	26.83	2.58	25.57	25.57	2.86	24.17	24.17	3.18
	57 (13.9)	29.00	29.00	2.12	27.96	27.96	2.34	26.80	26.80	2.58	25.53	25.53	2.86	24.13	24.13	3.18
1125	72 (22.2)	34.31	18.68	2.18	32.86	18.20	2.40	31.31	17.69	2.64	29.56	17.13	2.92	27.93	16.60	3.27
	67 (19.4)	31.50	23.94	2.18	30.12	23.42	2.39	28.67	22.89	2.63	27.04	22.28	2.91	25.28	21.64	3.25
	63 (17.2)††	29.40	22.94	2.18	28.16	22.44	2.39	26.73	21.87	2.63	25.20	21.25	2.91	23.53	20.57	3.23
	62 (16.7)	29.90	29.90	2.18	28.79	28.79	2.39	27.60	27.60	2.63	26.26	26.26	2.91	24.79	24.79	3.24
	57 (13.9)	29.86	29.86	2.18	28.76	28.76	2.39	27.56	27.56	2.63	26.22	26.22	2.91	24.75	24.75	3.24

EVAPORATOR AIR		CONDENSER ENTERING AIR TEMPERATURES °F (°C)														
		75 (23.9)			85 (29.4)			95 (35)			105 (40.6)			115 (46.1)		
CFM	EWB °F (°C)	Capacity MBtuh Total	Capacity MBtuh Sens‡	Total Sys. KW**	Capacity MBtuh Total	Capacity MBtuh Sens‡	Total Sys. KW**	Capacity MBtuh Total	Capacity MBtuh Sens‡	Total Sys. KW**	Capacity MBtuh Total	Capacity MBtuh Sens‡	Total Sys. KW**	Capacity MBtuh Total	Capacity MBtuh Sens‡	Total Sys. KW**
24ACB336ABN32 Outdoor Section With CNPV*3617AL* Indoor Section																
1050	72 (22.2)	45.00	21.31	2.82	42.27	20.46	2.93	39.43	19.58	3.06	36.45	18.68	3.21	33.29	17.73	3.37
	67 (19.4)	39.66	26.49	2.80	37.23	25.64	2.91	34.72	24.76	3.04	32.11	23.84	3.18	29.33	22.84	3.36
	63 (17.2)††	35.73	24.94	2.78	33.45	24.08	2.90	31.18	23.22	3.03	28.80	22.30	3.17	26.25	21.28	3.34
	62 (16.7)	36.27	36.27	2.78	34.49	34.49	2.90	32.64	32.64	3.03	30.67	30.67	3.18	28.50	28.50	3.35
	57 (13.9)	36.21	36.21	2.78	34.44	34.44	2.90	32.59	32.59	3.03	30.62	30.62	3.18	28.46	28.46	3.35
1200	72 (22.2)	44.13	21.83	3.08	41.23	20.95	3.20	38.29	20.06	3.32	35.19	19.14	3.47	31.92	18.16	3.64
	67 (19.4)	38.86	27.67	3.06	36.32	26.77	3.18	33.75	25.84	3.30	31.08	24.84	3.45	28.32	23.68	3.62
	63 (17.2)††	34.85	25.91	3.04	32.54	25.02	3.16	30.20	24.08	3.29	27.79	23.05	3.43	25.60	21.29	3.61
	62 (16.7)	36.56	36.56	3.05	34.64	34.64	3.17	32.64	32.64	3.30	30.50	30.50	3.44	28.17	28.17	3.62
	57 (13.9)	36.51	36.51	3.05	34.60	34.60	3.17	32.59	32.59	3.30	30.46	30.46	3.44	28.14	28.14	3.62
1350	72 (22.2)	42.95	22.22	3.34	39.98	21.33	3.46	36.93	20.42	3.58	33.75	19.48	3.73	30.38	18.48	3.90
	67 (19.4)	37.85	28.64	3.32	35.28	27.68	3.44	32.72	26.65	3.56	30.22	25.21	3.71	27.63	27.62	3.88
	63 (17.2)††	33.87	26.69	3.30	31.51	25.70	3.42	29.29	24.42	3.55	26.98	26.98	3.70	24.61	24.61	3.87
	62 (16.7)	36.50	36.50	3.31	34.44	34.44	3.43	32.30	32.30	3.56	30.02	30.02	3.71	27.54	27.54	3.88
	57 (13.9)	36.46	36.46	3.31	34.41	34.41	3.43	32.26	32.26	3.56	29.99	29.99	3.71	27.52	27.52	3.88

See notes on page 15

DETAILED COOLING CAPACITIES# CONTINUED

EVAPORATOR AIR		CONDENSER ENTERING AIR TEMPERATURES °F (°C)														
		75 (23.9)			85 (29.4)			95 (35)			105 (40.6)			115 (46.1)		
CFM	EWB °F (°C)	Capacity MBtuh Total	Capacity MBtuh Sens‡	Total Sys. KW**	Capacity MBtuh Total	Capacity MBtuh Sens‡	Total Sys. KW**	Capacity MBtuh Total	Capacity MBtuh Sens‡	Total Sys. KW**	Capacity MBtuh Total	Capacity MBtuh Sens‡	Total Sys. KW**	Capacity MBtuh Total	Capacity MBtuh Sens‡	Total Sys. KW**
24ACB342A*N30 Outdoor Section With CAP**4221AL* Indoor Section																
1225	72 (22.2)	48.93	25.83	3.05	46.69	24.96	3.36	44.35	24.08	3.73	41.90	23.16	4.17	39.33	22.20	4.68
	67 (19.4)	44.63	31.68	2.97	42.59	30.82	3.28	40.45	29.92	3.64	38.19	28.99	4.07	35.83	28.03	4.57
	63 (17.2)††	41.46	30.51	2.93	39.58	29.65	3.23	37.58	28.76	3.59	35.48	27.82	4.00	33.28	26.86	4.49
	62 (16.7)	40.87	37.50	2.92	39.07	36.62	3.22	37.20	35.70	3.58	35.25	34.67	4.00	33.36	33.36	4.50
	57 (13.9)	39.83	39.83	2.91	38.36	38.36	3.21	36.79	36.79	3.57	35.10	35.10	4.00	33.31	33.31	4.50
1400	72 (22.2)	49.71	26.98	3.13	47.35	26.09	3.45	44.94	25.19	3.82	42.39	24.26	4.26	39.73	23.29	4.77
	67 (19.4)	45.42	33.57	3.06	43.22	32.66	3.36	41.00	31.75	3.73	38.68	30.82	4.16	36.25	29.84	4.65
	63 (17.2)††	42.17	32.25	3.01	40.19	31.36	3.31	38.13	30.46	3.67	35.96	29.52	4.09	33.69	28.53	4.58
	62 (16.7)	41.78	40.06	3.00	39.96	39.11	3.31	38.09	38.09	3.67	36.34	36.34	4.10	34.43	34.43	4.60
	57 (13.9)	41.35	41.35	3.00	39.77	39.77	3.31	38.10	38.10	3.67	36.29	36.29	4.10	34.39	34.39	4.60
1575	72 (22.2)	50.30	28.09	3.21	47.88	27.19	3.53	45.37	26.27	3.91	42.75	25.32	4.35	40.03	24.34	4.86
	67 (19.4)	45.99	35.38	3.14	43.72	34.46	3.44	41.44	33.55	3.81	39.05	32.60	4.24	36.58	31.60	4.74
	63 (17.2)††	42.76	33.94	3.09	40.69	33.04	3.39	38.56	32.12	3.75	36.34	31.16	4.17	34.03	30.15	4.66
	62 (16.7)	42.58	42.58	3.08	40.97	40.97	3.40	39.19	39.17	3.76	37.30	37.30	4.19	35.30	35.30	4.70
	57 (13.9)	42.60	42.60	3.08	40.92	40.92	3.40	39.15	39.15	3.76	37.26	37.26	4.19	35.26	35.26	4.70

EVAPORATOR AIR		CONDENSER ENTERING AIR TEMPERATURES °F (°C)														
		75 (23.9)			85 (29.4)			95 (35)			105 (40.6)			115 (46.1)		
CFM	EWB °F (°C)	Capacity MBtuh Total	Capacity MBtuh Sens‡	Total Sys. KW**	Capacity MBtuh Total	Capacity MBtuh Sens‡	Total Sys. KW**	Capacity MBtuh Total	Capacity MBtuh Sens‡	Total Sys. KW**	Capacity MBtuh Total	Capacity MBtuh Sens‡	Total Sys. KW**	Capacity MBtuh Total	Capacity MBtuh Sens‡	Total Sys. KW**
24ACB348A*N30 Outdoor Section With CAP**4821AL* Indoor Section																
1400	72 (22.2)	54.80	28.81	3.36	52.36	27.89	3.71	49.81	26.94	4.11	47.12	25.95	4.56	44.29	24.93	5.06
	67 (19.4)	49.76	35.37	3.33	47.53	34.45	3.68	45.17	33.48	4.08	42.70	32.48	4.53	40.10	31.44	5.03
	63 (17.2)††	46.11	33.99	3.31	44.03	33.06	3.66	41.83	32.09	4.06	39.51	31.08	4.51	37.07	30.04	5.01
	62 (16.7)	45.39	41.86	3.31	43.42	40.91	3.66	41.35	39.87	4.05	39.18	39.18	4.50	37.29	37.29	5.01
	57 (13.9)	44.38	44.38	3.30	42.77	42.77	3.65	41.04	41.04	4.05	39.20	39.20	4.50	37.24	37.24	5.01
1650	72 (22.2)	55.95	30.53	3.46	53.38	29.59	3.81	50.68	28.61	4.21	47.88	27.60	4.66	44.93	26.56	5.16
	67 (19.4)	50.81	38.12	3.43	48.46	37.17	3.78	46.00	36.19	4.18	43.42	35.17	4.63	40.74	34.11	5.13
	63 (17.2)††	47.13	36.55	3.42	44.92	35.59	3.76	42.62	34.60	4.16	40.21	33.58	4.61	37.69	32.50	5.11
	62 (16.7)	46.71	45.46	3.41	44.79	44.79	3.76	42.93	42.93	4.16	40.95	40.95	4.61	38.84	38.84	5.12
	57 (13.9)	46.50	46.50	3.41	44.75	44.75	3.76	42.88	42.88	4.16	40.90	40.90	4.61	38.80	38.80	5.12
1800	72 (22.2)	56.45	31.49	3.52	53.81	30.54	3.87	51.07	29.55	4.27	48.20	28.54	4.72	45.19	27.47	5.22
	67 (19.4)	51.28	39.68	3.49	48.88	38.73	3.84	46.37	37.73	4.24	43.75	36.70	4.69	41.02	35.61	5.19
	63 (17.2)††	47.58	37.99	3.48	45.32	37.03	3.82	42.98	36.03	4.22	40.53	34.98	4.67	37.96	33.87	5.17
	62 (16.7)	47.62	47.62	3.47	45.78	45.78	3.82	43.84	43.84	4.22	41.78	41.78	4.68	39.59	39.59	5.18
	57 (13.9)	47.56	47.56	3.47	45.73	45.73	3.82	43.79	43.79	4.22	41.73	41.73	4.68	39.55	39.55	5.18

See notes on page 15

DETAILED COOLING CAPACITIES# CONTINUED

EVAPORATOR AIR		CONDENSER ENTERING AIR TEMPERATURES °F (°C)														
		75 (23.9)			85 (29.4)			95 (35)			105 (40.6)			115 (46.1)		
CFM	EWB °F (°C)	Capacity MBtuh Total	Capacity MBtuh Sens‡	Total Sys. KW**	Capacity MBtuh Total	Capacity MBtuh Sens‡	Total Sys. KW**	Capacity MBtuh Total	Capacity MBtuh Sens‡	Total Sys. KW**	Capacity MBtuh Total	Capacity MBtuh Sens‡	Total Sys. KW**	Capacity MBtuh Total	Capacity MBtuh Sens‡	Total Sys. KW**
24ACB360A*N31 Outdoor Section With CAP**6024AL* Indoor Section																
1750	72 (22.2)	68.36	36.10	4.29	65.33	34.94	4.72	62.14	33.73	5.20	58.75	32.46	5.75	55.15	31.13	6.37
	67 (19.4)	62.33	44.29	4.21	59.57	43.11	4.64	56.65	41.89	5.12	53.55	40.62	5.67	50.25	39.28	6.30
	63 (17.2)††	57.90	42.64	4.16	55.34	41.48	4.58	52.62	40.25	5.06	49.73	38.98	5.61	46.65	37.62	6.25
	62 (16.7)	57.03	52.36	4.16	54.56	51.17	4.57	51.97	49.89	5.05	49.29	48.49	5.60	46.62	46.62	6.25
	57 (13.9)	55.44	55.44	4.13	53.46	53.46	4.56	51.33	51.33	5.05	49.04	49.04	5.60	46.55	46.55	6.24
2000	72 (22.2)	69.50	37.80	4.40	66.35	36.63	4.83	63.02	35.39	5.31	59.50	34.10	5.86	55.77	32.75	6.48
	67 (19.4)	63.42	47.04	4.32	60.53	45.85	4.75	57.50	44.61	5.23	54.29	43.31	5.78	50.88	41.95	6.40
	63 (17.2)††	58.95	45.21	4.27	56.28	44.02	4.69	53.46	42.78	5.17	50.46	41.49	5.72	47.29	40.10	6.36
	62 (16.7)	58.29	56.06	4.26	55.81	54.75	4.69	53.26	53.26	5.17	50.84	50.84	5.73	48.18	48.18	6.37
	57 (13.9)	57.63	57.63	4.26	55.50	55.50	4.68	53.22	53.22	5.17	50.77	50.77	5.72	48.13	48.13	6.37
2250	72 (22.2)	70.34	39.41	4.51	67.07	38.20	4.94	63.64	36.95	5.42	60.02	35.64	5.97	56.18	34.27	6.59
	67 (19.4)	64.22	49.65	4.43	61.25	48.45	4.86	58.12	47.19	5.34	54.83	45.87	5.88	51.34	44.46	6.51
	63 (17.2)††	59.74	47.64	4.38	56.98	46.44	4.80	54.07	45.17	5.28	51.01	43.84	5.83	47.75	42.41	6.46
	62 (16.7)	59.46	59.46	4.37	57.24	57.24	4.80	54.82	54.82	5.29	52.23	52.23	5.84	49.44	49.44	6.48
	57 (13.9)	59.43	59.43	4.37	57.17	57.17	4.80	54.76	54.76	5.29	52.15	52.15	5.85	49.39	49.39	6.48

* Tested combination.

† Total and sensible capacities are net capacities. Blower motor heat has been subtracted.

‡ Sensible capacities shown are based on 80°F (27°C) entering air at the indoor coil. For sensible capacities at other than 80°F (27°C), deduct 835 Btuh (245 kW) per 1000 CFM (480 L/S) of indoor coil air for each degree below 80°F (27°C), or add 835 Btuh (245 kW) per 1000 CFM (480 L/S) of indoor coil air per degree above 80°F (27°C).

Detailed cooling capacities are based on indoor and outdoor unit at the same elevation per AHRI standard 210/240–2008. If additional tubing length and/or indoor unit is located above outdoor unit, a slight variation in capacity may occur.

** System kw is total of indoor and outdoor unit kilowatts.

†† At TVA rating indoor condition (75°F edb/63°F ewb). All other indoor air temperatures are at 80°F edb.

EWB — Entering Wet Bulb

NOTE: When the required data fall between the published data, interpolation may be performed. Extrapolation is not an acceptable practice.1.

CONDENSER ONLY RATINGS*

SST °F (°C)		CONDENSER ENTERING AIR TEMPERATURES °F (°C)						
		55 (12.78)	65 (18.33)	75 (23.89)	85 (29.44)	95 (35.0)	105 (40.56)	115 (46.11)
24ACB318ABN32								
30 (−1.11)	TCG	15.90	14.80	13.70	12.80	11.90	10.90	9.90
	SDT	69.60	78.90	88.30	97.70	107.10	116.40	125.80
	KW	0.85	0.96	1.09	1.22	1.38	1.55	1.75
35 (1.67)	TCG	17.40	16.30	15.20	14.20	13.20	12.20	11.10
	SDT	70.70	80.00	89.30	98.70	108.00	117.30	126.60
	KW	0.84	0.96	1.09	1.22	1.38	1.56	1.76
40 (4.44)	TCG	19.10	17.90	16.80	15.70	14.60	13.50	12.30
	SDT	71.80	81.10	90.40	99.70	109.00	118.30	127.50
	KW	0.83	0.95	1.08	1.22	1.38	1.56	1.76
45 (7.22)	TCG	20.80	19.50	18.40	17.30	16.10	14.90	13.60
	SDT	72.90	82.20	91.50	100.80	110.10	119.30	128.40
	KW	0.82	0.95	1.08	1.22	1.38	1.56	1.77
50 (10.0)	TCG	22.60	21.30	20.10	18.90	17.70	16.40	15.00
	SDT	74.10	83.40	92.60	101.90	111.10	120.30	129.40
	KW	0.81	0.94	1.07	1.22	1.38	1.56	1.77
55 (12.78)	TCG	24.40	23.10	21.90	20.60	19.30	18.00	16.50
	SDT	75.40	84.60	93.80	103.10	112.30	121.40	130.40
	KW	0.80	0.93	1.06	1.21	1.38	1.56	1.77
24ACB324ABN32								
30 (−1.11)	TCG	20.90	19.70	18.60	17.50	16.30	15.10	13.80
	SDT	70.60	79.20	88.70	98.20	107.70	117.90	129.70
	KW	1.13	1.26	1.41	1.59	1.80	2.05	2.39
35 (1.67)	TCG	23.10	21.80	20.60	19.30	18.10	16.80	15.40
	SDT	71.90	80.40	89.70	99.10	108.60	119.00	127.90
	KW	1.13	1.26	1.41	1.59	1.80	2.06	2.32
40 (4.44)	TCG	25.50	24.10	22.70	21.30	19.90	18.60	17.10
	SDT	73.60	82.00	90.80	100.10	109.60	119.60	128.80
	KW	1.13	1.26	1.41	1.59	1.80	2.06	2.32
45 (7.22)	TCG	27.90	26.30	24.90	23.40	22.00	20.60	18.90
	SDT	73.20	82.40	91.80	101.20	110.70	120.80	129.70
	KW	1.11	1.25	1.41	1.59	1.80	2.06	2.32
50 (10.0)	TCG	30.40	28.80	27.20	25.60	24.00	22.60	20.80
	SDT	74.40	83.70	93.00	102.30	111.70	121.70	130.50
	KW	1.10	1.24	1.40	1.59	1.80	2.06	2.32
55 (12.78)	TCG	33.10	31.30	29.60	27.90	26.20	24.70	22.40
	SDT	75.60	84.80	94.20	103.40	112.80	122.60	130.90
	KW	1.09	1.23	1.40	1.58	1.80	2.06	2.30
24ACB330ABN32								
30 (−1.11)	TCG	25.50	24.20	22.80	21.50	20.00	18.50	16.90
	SDT	71.50	80.80	89.50	98.90	108.20	117.50	126.70
	KW	1.41	1.58	1.75	1.96	2.18	2.45	2.74
35 (1.67)	TCG	28.20	26.70	25.20	23.70	22.10	20.50	18.70
	SDT	73.60	82.10	90.70	100.00	109.30	118.50	127.70
	KW	1.43	1.59	1.76	1.96	2.19	2.46	2.76
40 (4.44)	TCG	30.90	29.30	27.70	26.00	24.30	22.50	20.60
	SDT	73.80	83.10	92.20	101.20	110.40	119.50	128.80
	KW	1.41	1.58	1.76	1.97	2.20	2.46	2.78
45 (7.22)	TCG	33.70	32.10	30.30	28.60	26.70	24.70	22.60
	SDT	75.10	84.50	93.40	102.50	111.60	120.70	129.90
	KW	1.41	1.58	1.76	1.97	2.21	2.47	2.79
50 (10.0)	TCG	36.90	35.10	33.20	31.20	29.20	27.00	24.70
	SDT	76.70	85.80	94.80	103.90	112.90	121.90	131.00
	KW	1.42	1.59	1.77	1.98	2.22	2.48	2.80
55 (12.78)	TCG	40.30	38.30	36.20	34.00	31.80	29.50	27.40
	SDT	78.40	87.40	96.30	105.30	114.20	123.10	132.60
	KW	1.43	1.59	1.78	1.99	2.22	2.50	2.83

See notes on page 18

CONDENSER ONLY RATINGS CONTINUED

SST °F (°C)		CONDENSER ENTERING AIR TEMPERATURES °F (°C)						
		55 (12.78)	65 (18.33)	75 (23.89)	85 (29.44)	95 (35.0)	105 (40.56)	115 (46.11)
24ACB336ABN32								
30 (−1.11)	TCG	32.60	30.50	28.70	27.00	25.20	23.40	21.50
	SDT	73.10	82.60	91.10	100.30	109.70	119.00	128.30
	KW	1.61	1.88	2.11	2.36	2.63	2.95	3.32
35 (1.67)	TCG	36.10	33.90	31.80	29.90	27.90	26.00	23.90
	SDT	74.30	83.90	92.40	101.60	110.80	120.00	129.20
	KW	1.61	1.90	2.13	2.38	2.65	2.96	3.34
40 (4.44)	TCG	40.10	37.60	35.30	33.10	30.90	28.70	26.40
	SDT	76.00	85.10	93.90	102.90	112.10	121.20	130.30
	KW	1.64	1.91	2.16	2.41	2.68	2.99	3.36
45 (7.22)	TCG	44.50	41.70	39.20	36.70	34.30	31.80	29.30
	SDT	77.80	86.60	95.60	104.40	113.40	122.40	131.40
	KW	1.69	1.95	2.19	2.44	2.71	3.02	3.38
50 (10.0)	TCG	49.40	46.30	43.50	40.70	38.00	35.20	32.40
	SDT	79.70	88.50	97.30	106.10	114.90	123.80	132.70
	KW	1.74	2.00	2.24	2.48	2.75	3.06	3.42
55 (12.78)	TCG	54.80	51.40	48.20	45.10	42.00	39.00	35.80
	SDT	82.20	90.70	99.20	107.90	116.60	125.30	134.00
	KW	1.81	2.06	2.30	2.54	2.81	3.11	3.46
24ACB342A*N30								
30 (−1.11)	TCG	37.60	35.70	33.80	31.70	29.60	27.30	25.00
	SDT	72.60	81.80	91.10	100.30	109.50	118.70	127.90
	KW	1.92	2.15	2.40	2.69	3.02	3.40	3.84
35 (1.67)	TCG	41.50	39.40	37.30	35.00	32.70	30.30	27.70
	SDT	74.10	83.30	92.40	101.60	110.70	119.80	129.00
	KW	1.94	2.17	2.43	2.72	3.05	3.44	3.89
40 (4.44)	TCG	45.70	43.30	40.90	38.50	36.00	33.40	30.60
	SDT	75.70	84.80	93.80	102.90	112.00	121.00	130.10
	KW	1.98	2.21	2.46	2.76	3.09	3.49	3.94
45 (7.22)	TCG	50.10	47.50	44.90	42.20	39.40	36.60	33.70
	SDT	77.40	86.30	95.30	104.30	113.30	122.20	131.30
	KW	2.03	2.25	2.51	2.81	3.15	3.55	4.01
50 (10.0)	TCG	54.80	51.90	49.00	46.10	43.10	40.00	36.90
	SDT	79.20	88.00	96.90	105.80	114.70	123.60	132.50
	KW	2.09	2.32	2.58	2.87	3.22	3.63	4.10
55 (12.78)	TCG	59.70	56.50	53.30	50.10	46.90	43.60	40.20
	SDT	81.10	89.80	98.50	107.30	116.10	125.00	133.80
	KW	2.17	2.39	2.66	2.96	3.32	3.73	4.21
24ACB348A*N30								
30 (−1.11)	TCG	41.30	39.40	37.20	35.00	32.70	30.20	27.60
	SDT	74.10	84.20	92.90	102.10	111.40	120.70	129.90
	KW	2.19	2.46	2.74	3.06	3.44	3.86	4.32
35 (1.67)	TCG	45.50	43.40	41.10	38.60	36.10	33.50	30.70
	SDT	75.60	85.20	94.20	103.40	112.70	121.90	131.00
	KW	2.22	2.48	2.76	3.10	3.48	3.90	4.37
40 (4.44)	TCG	50.10	47.70	45.20	42.50	39.80	37.00	34.00
	SDT	78.10	86.50	96.00	104.90	114.00	123.10	132.20
	KW	2.27	2.50	2.81	3.13	3.51	3.94	4.41
45 (7.22)	TCG	55.10	52.40	49.60	46.70	43.80	40.70	37.60
	SDT	79.00	88.10	97.20	106.30	115.40	124.40	133.50
	KW	2.28	2.53	2.83	3.17	3.55	3.98	4.45
50 (10.0)	TCG	60.40	57.40	54.40	51.20	48.10	44.70	41.40
	SDT	81.00	90.00	98.90	107.90	117.10	125.80	134.80
	KW	2.31	2.57	2.86	3.20	3.60	4.02	4.50
55 (12.78)	TCG	66.20	62.80	59.50	56.10	52.60	49.00	45.40
	SDT	84.00	91.90	100.70	109.70	118.40	127.30	136.10
	KW	2.37	2.60	2.90	3.24	3.63	4.06	4.54

See notes on page 18

CONDENSER ONLY RATINGS CONTINUED

SST °F (°C)		CONDENSER ENTERING AIR TEMPERATURES °F (°C)						
		55 (12.78)	65 (18.33)	75 (23.89)	85 (29.44)	95 (35.0)	105 (40.56)	115 (46.11)
24ACB360A*N31								
30 (–1.11)	TCG	52.10	49.70	47.10	44.30	41.40	38.40	35.20
	SDT	75.20	84.80	93.60	102.70	111.90	121.00	130.10
	KW	2.70	3.04	3.39	3.79	4.25	4.78	5.40
35 (1.67)	TCG	57.50	54.80	51.90	48.90	45.70	42.40	39.00
	SDT	77.00	86.80	95.10	104.20	113.20	122.20	131.30
	KW	2.74	3.11	3.44	3.84	4.30	4.83	5.45
40 (4.44)	TCG	63.20	60.10	57.00	53.70	50.30	46.70	43.00
	SDT	78.70	87.70	96.70	105.60	114.60	123.60	132.50
	KW	2.79	3.13	3.49	3.90	4.36	4.89	5.51
45 (7.22)	TCG	69.30	65.90	62.40	58.80	55.10	51.30	47.30
	SDT	80.60	89.50	98.30	107.20	116.10	124.90	133.70
	KW	2.85	3.19	3.56	3.97	4.43	4.96	5.57
50 (10.0)	TCG	75.80	72.00	68.20	64.30	60.20	56.10	51.80
	SDT	82.60	91.30	100.10	108.80	117.60	126.30	135.10
	KW	2.92	3.26	3.63	4.04	4.50	5.03	5.63
55 (12.78)	TCG	82.80	78.50	74.30	70.00	65.60	61.10	56.40
	SDT	85.70	93.40	101.90	110.50	119.20	127.80	136.40
	KW	3.04	3.34	3.71	4.12	4.58	5.11	5.71

* AHRI listing applies only to systems shown in Combination Ratings table.

KW – Outdoor Unit Kilowatts Only.

SDT – Saturated Temperature Leaving Compressor (°F)

SST – Saturated Temperature Entering Compressor (°F/°C)

TCG – Gross Cooling Capacity (1000 Btuh)

GUIDE SPECIFICATIONS
GENERAL

System Description

Outdoor-mounted, air-cooled, split-system air conditioner unit suitable for ground or rooftop installation. Unit consists of a hermetic compressor, an air-cooled coil, propeller-type condenser fan, and a control box. Unit will discharge supply air upward as shown on contract drawings. Unit will be used in a refrigeration circuit to match up to a packaged fan coil or coil unit.

Quality Assurance

— Unit will be rated in accordance with the latest edition of AHRI Standard 210.

— Unit will be certified for capacity and efficiency, and listed in the latest AHRI directory.

— Unit construction will comply with latest edition of ANSI/ ASHRAE and with NEC.

— Unit will be constructed in accordance with UL standards and will carry the UL label of approval. Unit will have c-UL-us approval.

— Unit cabinet will be capable of withstanding Federal Test Method Standard No. 141 (Method 6061) 500-hr salt spray test.

— Air-cooled condenser coils will be leak tested at 150 psig and pressure tested at 450 psig.

— Unit constructed in ISO9001 approved facility.

Delivery, Storage, and Handling

— Unit will be shipped as single package only and is stored and handled per unit manufacturer's recommendations.

Warranty (for inclusion by specifying engineer)

— U.S. and Canada only.

PRODUCTS

Equipment

Factory assembled, single piece, air-cooled air conditioner unit. Contained within the unit enclosure is all factory wiring, piping, controls, compressor, refrigerant charge Puron® (R-410A), and special features required prior to field start-up.

Unit Cabinet

— Unit cabinet will be constructed of galvanized steel, bonderized, and coated with a powder coat paint.

Fans

— Condenser fan will be direct-drive propeller type, discharging air upward.

— Condenser fan motors will be totally enclosed, 1-phase type with class B insulation and permanently lubricated bearings. Shafts will be corrosion resistant.

— Fan blades will be statically and dynamically balanced.

— Condenser fan openings will be equipped with coated steel wire safety guards.

Compressor

— Compressor will be hermetically sealed.

— Compressor will be mounted on rubber vibration isolators.

Condenser Coil

— Condenser coil will be air cooled.

— Coil will be constructed of aluminum fins mechanically bonded to copper tubes which are then cleaned, dehydrated, and sealed.

Refrigeration Components

— Refrigeration circuit components will include liquid-line shutoff valve with sweat connections, vapor-line shutoff valve with sweat connections, system charge of Puron® (R-410A) refrigerant, and compressor oil.

— Unit will be equipped with filter drier for Puron refrigerant.

Operating Characteristics

— The capacity of the unit will meet or exceed _____ Btuh at a suction temperature of _____ °F/°C. The power consumption at full load will not exceed _____ kW.

— Combination of the unit and the evaporator or fan coil unit will have a total net cooling capacity of _____ Btuh or greater at conditions of _____ CFM entering air temperature at the evaporator at _____ °F/°C wet bulb and _____ °F/°C dry bulb, and air entering the unit at _____ °F/°C.

— The system will have a SEER of _____ Btuh/watt or greater at DOE conditions.

Electrical Requirements

— Nominal unit electrical characteristics will be _____ v, single phase, 60 hz. The unit will be capable of satisfactory operation within voltage limits of _____ v to _____ v.

— Unit electrical power will be single point connection.

— Control circuit will be 24v.

Special Features

— Refer to section of this literature identifying accessories and descriptions for specific features and available enhancements.

Copyright 2019 Carrier Corp. • 7310 W. Morris St. • Indianapolis, IN 46231

Edition Date: 05/19

Catalog No. 24ACB3–11PD

Manufacturer reserves the right to change, at any time, specifications and designs without notice and without obligations.

Replaces: 24ACB3–10PD