25HPA5
Performance™ 15 Series Heat Pump with Puron® Refrigerant
1–1/2 to 5 Nominal Tons (Sizes 18 to 60)

Carrier®
Turn to the Experts.℠

Product Data

Performance™ SERIES

Puron™
the environmentally sound refrigerant

Carrier's heat pumps with Puron® refrigerant provide a collection of features unmatched by any other family of equipment. The 25HPA has been designed utilizing Carrier's Puron refrigerant. The environmentally sound refrigerant allows consumers to make a responsible decision in the protection of the earth's ozone layer.

As an Energy Star® Partner, Carrier Corporation has determined that this product meets the Energy Star® guidelines for energy efficiency. Refer to the combination ratings in the Product Data for system combinations that meet Energy Star® guidelines.

NOTE: Ratings contained in this document are subject to change at any time. Always refer to the AHRI directory (www.ahridirectory.org) for the most up-to-date ratings information.

LIMITED WARRANTY

- Standard 10-year limited warranty on the compressor
- Standard 5-year limited warranty on all parts

INDUSTRY LEADING FEATURES / BENEFITS

ENERGY EFFICIENCY

- 15 SEER/11.5 EER/8 HSPF (Nominal)

NEW AESTHETIC DESIGN

- WeatherArmor Ultra™
- Baked-on powder paint
- Steel louver coil guard
- Color matched cabinet screws

EXTRA QUIET OPERATION

- Silencer System II™ for sound as low as 69 dBA
  - — Quiet mount split post compressor grommets
  - — External silencer muffler
  - — Exclusive Silencer top design
  - — 8 Pole PSC ball-bearing condenser fan motor
  - — Forward-swept condenser fan blade
  - — Compressor blanket
  - — Quiet shift defrost

RELIABILITY AND QUALITY

- Scroll compressor
- Field-installed 16 cu. in. filter drier
- Back-seating service valves
- High-pressure switch
- Loss-of-charge switch
- Internal pressure-relief valve
- Internal thermal overload
- Suction line accumulator
- Vapor fog eliminator

CONTROLS AND DIAGNOSTICS

- Infinity™ Control compatible
- On-board Carrier diagnostics
- Up to 14 point diagnostic capability
- Long line accessory connections

APPLICATIONS

- Long-line - up to 250 feet (76.20 m) total equivalent length, up to 200 feet (60.96 m) condenser above evaporator, or up to 80 ft. (24.38 m) evaporator above condenser (See Longline Guide for more information.)
- Low ambient (down to -20°F/-28.9°C) with accessory kit

MODEL NUMBER NOMENCLATURE

1	2	3	4	5	6	7	8	9	10	11	12	13
N	N	A	A	A/N	N	N	N	A/N	A/N	A/N	N	N
2	**5**	**H**	**P**	**A**	**5**	**3**	**6**	**A**	**0**	**0**	**3**	0
Product Series		Product Family	Tier	Major Series	SEER	Cooling Capacity		Variations	Open	Open	Voltage	Minor Series
25 = HP		H = RES HP	P= Perfor-mance	A = Puron	5=15 SEER			A = Standard	0=Not Defined	0=Not Defined	3=208/230–1	0, 1, 2...

Puron™ the environmentally sound refrigerant

ARI PERFORMANCE CERTIFIED™ ARI Standard 210/240 Unitary Air Conditioners

ISO 9001:2000 QMI REGISTERED

energy ENERGY STAR PARTNER

This product has been designed and manufactured to meet Energy Star® criteria for energy efficiency when matched with appropriate coil components. However, proper refrigerant charge and proper air flow are critical to achieve rated capacity and efficiency. Installation of this product should follow all manufacturing refrigerant charging and air flow instructions. **Failure to confirm proper charge and air flow may reduce energy efficiency and shorten equipment life.**

25HPA5

STANDARD FEATURES

Feature	18	24	30	36	42	48	60
Puron® Refrigerant	X	X	X	X	X	X	X
15 SEER	X	X	X	X	X	X	
Scroll Compressor	X	X	X	X	X	X	X
Louvered Coil Guard	X	X	X	X	X	X	X
Field–Installed Filter Drier	X	X	X	X	X	X	X
Back–Seating Service Valves	X	X	X	X	X	X	X
Internal Pressure–Relief Valve	X	X	X	X	X	X	X
Internal Thermal Overload	X	X	X	X	X	X	X
Long Line capability	X	X	X	X	X	X	X
Low–ambient capability with Kit or Infinity™ Control	X	X	X	X	X	X	X
Suction Line Accumulator	X	X	X	X	X	X	X
High–Pressure Switch	X	X	X	X	X	X	X
Loss–of–Charge Switch	X	X	X	X	X	X	X

PHYSICAL DATA

UNIT SIZE SERIES	18–30	24–30	30–30	36–30	42–30	48–30	60–30
Operating Weight lb (kg)	210 (95.2)	252 (114.3)	289 (131.1)	292 (132.4)	309 (140.2)	315 (142.9)	326 (147.9)
Shipping Weight lb (kg)	244 (110.7)	292 (132.4)	323 (146.5)	328 (148.8)	345 (156.5)	352 (159.7)	362 (164.2)
Compressor Type	Scroll						
REFRIGERANT	Puron® (R–410A)						
Control	TXV (Puron Hard Shutoff)						
Charge lb (kg)	6.19 (2.81)	10.25 (4.65)	11.77 (5.34)	14.63 (6.64)	13.97 (6.34)	12.39 (5.62)	12.38 (5.62)
Outdoor Piston no.	42	49	55	57	63	67	73
COND FAN	Propeller Type, Direct Drive						
Air Discharge	Vertical						
Air Qty. (CFM)	2595	2595	3265	3265	3265	3673	3673
Motor HP	1/10	1/10	1/5	1/5	1/5	1/4	1/4
Motor RPM	800	800	800	800	800	800	800
COND COIL							
Face Area (Sq. ft.)	16.26	18.3	20.33	24.4	24.4	24.4	24.4
Fins per In.	20	20	20	20	20	20	20
Rows	1	1	1	2	2	2	2
Circuits	4	5	6	7	8	8	9
VALVE CONNECT. (In. ID)							
Vapor	5/8	5/8	3/4	3/4	7/8	7/8	7/8
Liquid	3/8”						
REFRIGERANT TUBES (In. OD)							
Rated Vapor*	5/8	5/8	3/4	3/4	7/8	7/8	1–1/8
Liquid	3/8”						

*Units are rated with 25 ft (7.6 m) of lineset length. See *Vapor Line Sizing and Cooling Capacity Loss* table when using other sizes and lengths of lineset.

Note: See unit Installation Instruction for proper installation.

25HPA5

VAPOR LINE SIZING AND COOLING CAPACITY LOSS

LONG LINE APPLICATION: An application is considered ”Long line” when the total equivalent tubing length exceeds 80 ft. (24.38 m) or when there is more than 20 ft. (6.09 m) vertical separation between indoor and outdoor units. These applications require additional accessories and system modifications for reliable system operation. The maximum allowable total equivalent length is up to 250 ft. (76.2 m). The maximum vertical separation is 200 ft. (60.96 m) when outdoor unit is above indoor unit, and up to 80 ft. (24.38 m) when the outdoor unit is below the indoor unit. Refer to Accessory Usage Guideline below for required accessories. See Longline Application Guideline for required piping and system modifications. Also, refer to the table below for vapor tube diameters based on the total length to minimize the cooling capacity loss.

Unit Nominal Size (Btuh)	Maximum Liquid Line Diameters (In.) OD	Vapor Line Diameters (In.) OD	Cooling Capacity Loss (%) Total Equivalent Line Length ft. (m)								
			Standard Application		Long Line Application Requires Accessories						
			26–50 (7.9–15.2)	51–80 (15.5–24.4)	81–100 (24.7–30.5)	101–125 (30.8–38.1)	126–150 (38.4–45.7)	151–175 (46.0–50.3)	176–200 (53.6–60.0)	201–225 (61.3–68.6)	226–250 (68.9–76.2)
18,000 1–Stage Puron HP	3/8	1/2	1	2	3	4	6	7	8	9	10
		5/8	0	0	1	1	1	2	2	3	3
24,000 1–Stage Puron HP		5/8	0	1	1	2	3	3	4	4	5
		3/4	0	0	0	0	1	1	1	1	1
30,000 1–Stage Puron HP		5/8	1	2	3	3	4	5	6	7	8
		3/4	0	0	1	1	1	2	2	2	3
		7/8	0	0	0	0	1	1	1	1	1
36,000 1–Stage Puron HP		5/8	1	2	4	5	6	7	9	10	11
		3/4	0	0	1	1	2	2	3	3	4
		7/8	0	0	0	0	1	1	1	1	2
42,000 1–Stage Puron HP		3/4	0	1	2	2	3	4	4	5	6
		7/8	0	0	1	1	1	2	2	2	3
48,000 1–Stage Puron HP		3/4	0	1	2	3	4	5	5	6	7
		7/8	0	0	1	1	2	2	2	3	3
60,000 1–Stage Puron HP		3/4	1	2	4	5	6	7	9	10	11
		7/8	0	1	2	2	3	4	4	5	5
		1–1/8	0	0	0	1	1	1	1	1	1

Applications in this area are long line. Accessories are required as shown recommended on Long Line Application Guidelines

Applications in this area may have height restrictions that limit allowable total equivalent length, when outdoor unit is below indoor unit See Long Line Application Guidelines

ACCESSORIES

KIT NUMBER	KIT NAME	18–30	24–30	30–30	36–30	42–30	48–30	60–30
KAACH1201AAA	CRANKCASE HEATER				S	S	S	S
KAACH1401AAA	CRANKCASE HEATER	S	S	S				
KAAFT0101AAA	FREEZE THERMOSTAT	X	X	X	X	X	X	X
KSAHS1701AAA	HARD START (CAP/RELAY)	X	X	X	X	X	X	X
KHAIR0101AAA	ISOLATION RELAY	X	X	X	X	X	X	X
KSALA0301410	LOW–AMBIENT SWITCH	X	X	X	X	X	X	X
KHAOT0201SEC	OUTDOOR THERMOSTAT	X	X	X	X	X	X	X
KHAOT0301FST	OUTDOOR THERMOSTAT	X	X	X	X	X	X	X
KAACS0201PTC	PTC START ASSIST	X	X	X	X	X	X	X
KHALS0401LLS	SOLENOID VALVE	X	X	X	X	X	X	X
KSASF0101AAA	SUPPORT FEET	X	X	X	X	X	X	X
KAATD0101TDR	TIME DELAY RELAY	X	X	X	X	X	X	X
KSATX0201PUR	TXV (HSO)	X	X	X				
KSATX0301PUR	TXV (HSO)				X	X		
KSATX0401PUR	TXV (HSO)						X	
KSATX0501PUR	TXV (HSO)							X
KSASF0101AAA	SUPPORT FEET	X	X	X	X	X	X	X
KHASS0706MPK*	SNOW STAND	X	X	X	X	X	X	X

x = Accessory S = Standard

* Order through RCD–Totaline, part number KHASS0706MPK (qty 6).

ACCESSORY THERMOSTATS

THERMOSTAT / SUBBASE PKG.	DESCRIPTION
TP–PRH–01	Programmable Thermidistat
TP–NRH–01	Non–programmable Thermidistat
TP–PHP–01	Performance Series Programmable HP Stat
TP–NHP–01	Performance Series Non–programmable HP Stat
TSTATCCPRH01–B*	Thermidistat™ Control — Non–Programmable/Programmable Thermostat with Humidity Control (For use in Dual Fuel, AC, HP, and 2S applications. Includes Outdoor Air Temperature Sensor.)
TSTATCCPHH01–B*	HybridHeat™ (Dual Fuel) Thermostat — Auto Changeover, 7–Day Programmable, °F/°C, Includes Outdoor Sensor (TSTATXXSEN01–B)
TSTATCCPHP01–B	Thermostat — Auto Changeover, 7–Day Programmable, °F/°C, 2–Stage Heat, 1–Stage Cool
TSTATCCNHP01–C	Thermostat — Auto Changeover, Non–Programmable, °F/°C, 2–Stage Heat, 1–Stage Cool
TSTATCCSHP01	Standard Programmable Thermostat—Manual Changeover, 5–2 Day Programmable, °F/°C, 1–Stage Heat/ 1–Stage Cool
TSTATCCBHP01*–B	Builder's Thermostat — Heat Pump, Non–Programmable, °F/°C, 2–Stage Heat, 1–Stage Cool, Manual Changeover
TSTATXXSEN01–B**	Outdoor Air Temperature Sensor
TSTATXXNBP01	Backplate for Non–Programmable Thermostat
TSTATXXPBP01	Backplate for Programmable Thermostat and Thermidistat™ Control
TSTATXXSBP01	Backplate for Standard Programmable Thermostat
TSTATXXBBP01	Backplate for Builder's Thermostat
TSTATXXCNV10†	Thermostat Conversion Kit (4 to 5 Wire) — 10 Pack

* Do not use in zoning heat pump applications.

** Outdoor temperature sensor is an accessory for all Carrier electronic thermostats, except the non–programmable air conditioner version and builder;s thermostats. It allows the temperature at a remote location (outdoors) to be displayed on the thermostat. The outdoor air temperature sensor must be used with the HybridHeat™ (dual fuel) thermostat.

† Thermostat conversion kit is a 24–vac accessory that can turn a 4–wire thermostat application into a 5–wire application. This kit can also be used to replace a broken thermostat wire, or add an extra wire when needed.

The outdoor air temperature sensor is included with the Thermidistat Control and HybridHeat™ (dual fuel) thermostat.

INFINITY* CONTROLS	DESCRIPTION
SYSTXCCUID01–A*	Infinity Control Deluxe 7–Day Programmable (Wall–mounted system control.)
SYSTXCCUIZ01–A*	Infinity Control Deluxe Zoning 7–Day Programmable (Wall–mounted control for a multi–zone system.)
SYSTXCC4ZC01	Infinity 4–Zone Damper Control Module (Wall–mounted control for a four–zone system.)
SYSTXCCSMS01	Infinity Smart Sensor (Optional wall control used to monitor temperature and/or fan control in an individual zone.)
SYSTXCCRRS01	Infinity Remote Room Sensor (Monitors temperature in an individual zone.)
SYSTXCCSAM01	Infinity System Access Module (Hardware for wireless access and control via phone or internet.)
SYSTXCCNIM01	Infinity Network Interface Module (Connects Heat Recovery and Energy Recovery Ventilators on non–zoning applications.)
SYSTXXXBPU01	Decorative Back Plate for Infinity Control (Decorative wall plate.)

* These Performance series units must use "–A" revision or later to operate properly.

ACCESSORY USAGE GUIDELINE

Accessory	REQUIRED FOR LOW–AMBIENT COOLING APPLICATIONS (Below 55°F / 12.8°C)	REQUIRED FOR LONG LINE APPLICATIONS* (Over 80 ft. / 24.38 m)	REQUIRED FOR SEA COAST APPLICATIONS (Within 2 miles / 3.22 km)
Accumulator	Standard	Standard	Standard
Ball Bearing Fan Motor	Yes†	No	No
Compressor Start Assist Capacitor and Relay	Yes	Yes	No
Crankcase Heater	Yes	Yes	No
Evaporator Freeze Thermostat	Yes	No	No
Hard Shutoff TXV	Yes	Yes	Yes
Isolation Relay	Yes	No	No
Liquid Line Solenoid Valve	No	See Long–Line Application Guideline	No
Motor Master® Control or Low Ambient Switch	Yes	No	No
Support Feet	Recommended	No	Recommended

* For tubing line sets between 80 and 200 ft. (24.38 and 60.96 m) and/or 20 ft. (6.09 m) vertical differential, refer to Residential Split–System Longline Application Guideline.

† Additional requirement for Low–Ambient Controller (full modulation feature) MotorMaster® Control.

25HPA5

Accessory Description and Usage (Listed Alphabetically)

1. Ball-Bearing Fan Motor

A fan motor with ball bearings which permits speed reduction while maintaining bearing lubrication.

Usage Guideline:

Required on all units when using MotorMaster®

2. Compressor Start Assist - Capacitor and Relay

Start capacitor and relay gives a ”hard” boost to compressor motor at each start up.

Usage Guideline:

Required for reciprocating compressors in the following applications:

Long line

Low ambient cooling

Hard shut off expansion valve on indoor coil

Liquid line solenoid on indoor coil

Required for single-phase scroll compressors in the following applications:

Long line

Low ambient cooling

Suggested for all compressors in areas with a history of low voltage problems.

3. Compressor Start Assist — PTC Type

Solid state electrical device which gives a ”soft” boost to the compressor at each start-up.

Usage Guideline:

Suggested in installations with marginal power supply.

4. Crankcase Heater

An electric resistance heater which mounts to the base of the compressor to keep the lubricant warm during off cycles. Improves compressor lubrication on restart and minimizes the chance of liquid slugging.

Usage Guideline:

Required in low ambient cooling applications.

Required in long line applications.

Suggested in all commercial applications.

5. Evaporator Freeze Thermostat

An SPST temperature-actuated switch that stops unit operation when evaporator reaches freeze-up conditions.

Usage Guideline:

Required when low ambient kit has been added.

6. Isolation Relay

An SPDT relay which switches the low-ambient controller out of the outdoor fan motor circuit when the heat pump switches to heating mode.

Usage Guideline:

Required in all heat pumps where low ambient kit has been added.

7. Liquid-Line Solenoid Valve (LLS)

An electrically operated shutoff valve which stops and starts refrigerant liquid flow in response to compressor operation. It is to be installed at the outdoor unit to control refrigerant off cycle migration in the heating mode.

Usage Guideline:

An LLS is required in all long line heat pump applications to control refrigerant off cycle migration in the heating mode. See Long Line Guideline.

8. Low-Ambient Pressure Switch Kit

A long life pressure switch which is mounted to outdoor unit service valve. It is designed to cycle the outdoor fan motor in order to maintain head pressure within normal operating limits. The control will maintain working head pressure at low-ambient temperatures down to 0°F (-17.8°C)when properly installed.

Usage Guideline:

A Low-Ambient Pressure Switch or MotorMaster® Low-Ambient Controller must be used when cooling operation is used at outdoor temperatures below 55°F (12.8°C).

9. MotorMaster® Low-Ambient Controller

A fan-speed control device activated by a temperature sensor, designed to control condenser fan motor speed in response to the saturated, condensing temperature during operation in cooling mode only. For outdoor temperatures down to -20°F (-28.9°C), it maintains condensing temperature at 100°F ±10°F (37.8°C ± 6.5°C).

Usage Guideline:

A MotorMaster® Low Ambient Controller or Low-Ambient Pressure Switch must be used when cooling operation is used at outdoor temperatures below 55°F (12.8°C).

Suggested for all commercial applications.

10. Outdoor Air Temperature Sensor

Designed for use with Carrier Thermostats listed in this publication. This device enables the thermostat to display the outdoor temperature. This device also is required to enable special thermostat features such as auxiliary heat lock out.

Usage Guideline:

Suggested for all Carrier thermostats listed in this publication.

11. Outdoor Thermostat

An SPDT temperature-actuated switch which turns on supplemental electric heaters when outdoor air temperature drops below a user-selected set point.

Usage Guideline:

Electric supplemental heat applications in non-variable speed indoor units when electric heat staging is desired.

12. Secondary Outdoor Thermostat

An SPDT temperature-actuated switch which turns on third-stage of supplemental electric heaters when outdoor air temperature drops below the second-stage set point.

Usage Guideline:

Outdoor thermostat applications where electric heater is capable of three-stage operation.

13. Snow Stand

Coated wire rack which supports unit 18 in. (457.2 mm) above mounting pad to allow for drainage from unit base.

Usage Guideline:

Suggested in the following applications:

Heat pump installations in heavy snowfall areas.

Heat pump installations in snow drift locations.

Heat pump installations in areas of prolonged subfreezing temperatures.

All commercial installations.

14. Sound Hood

Wraparound sound reducing cover for the compressor. Reduces the sound level by about 2 dBA.

Usage Guideline:

Suggested when unit is installed closer than 15 ft. (4.577 m) to quiet areas, bedrooms, etc.

Suggested when unit is installed between two houses less than 10 ft. (3.05 m) apart.

15. Thermostatic Expansion Valve (TXV) Bi-Flow

A modulating flow-control valve which meters refrigerant liquid flow rate into the evaporator in response to the superheat of the refrigerant gas leaving the evaporator.

Usage Guideline:

Accessory required to meet ARI rating and system reliability, where indoor not equipped.

Required in all heat pump applications designed with Puron refrigerant.

16. Time-Delay Relay

An SPST delay relay which briefly continues operation of indoor blower motor to provide additional cooling after the compressor cycles off.

Note: Most indoor unit controls include this feature. For those that do not, use the guideline below.

Usage Guideline:

Accessory required to meet ARI rating, where indoor not equipped.

ELECTRICAL DATA

UNIT SIZE – SERIES	V/PH	OPER VOLTS*		COMPR		FAN	MCA	MIN WIRE SIZE†	MIN WIRE SIZE†	MAX LENGTH ft (m)‡	MAX LENGTH ft (m)‡	MAX FUSE** or CKT BRK AMPS
		MAX	MIN	LRA	RLA	FLA		60° C	75° C	60° C	75° C	
18–30	208/230/1	253	197	48.0	9.0	0.7	12.0	14	14	66 (20.1)	62 (18.9)	20
24–30				58.3	12.8	0.7	16.7	14	14	46 (14.0)	44 (13.4)	25
30–30				73.0	14.1	1.1	18.7	14	14	41 (12.5)	39 (11.9)	30
36–30				79.0	17.9	1.1	23.4	12	12	55 (16.8)	52 (15.9)	35
42–30				109.0	21.3	1.1	27.7	10	10	71 (21.6)	68 (20.7)	40
48–30				117.0	21.8	1.3	28.5	10	10	69 (21.0)	66 (20.1)	40
60–30				134.0	26.4	1.3	34.3	8	10	91 (27.7)	56 (17.1)	50

* Permissible limits of the voltage range at which the unit will operate satisfactorily

† If wire is applied at ambient greater than 30°C, consult table 310–16 of the NEC (ANSI/NFPA 70). The ampacity of non–metallic–sheathed cable (NM), trade name ROMEX, shall be that of 60°C conditions, per the NEC (ANSI/NFPA 70) Article 336–26. If other than uncoated (no–plated), 60 or 75°C insulation, copper wire (solid wire for 10 AWG or smaller, stranded wire for larger than 10 AWG) is used, consult applicable tables of the NEC (ANSI/NFPA 70).

‡ Length shown is as measured 1 way along wire path between unit and service panel for voltage drop not to exceed 2%.

** Time–Delay fuse.

FLA – Full Load Amps

LRA – Locked Rotor Amps

MCA – Minimum Circuit Amps

RLA – Rated Load Amps

NOTE: Control circuit is 24–V on all units and requires external power source. Copper wire must be used from service disconnect to unit.
All motors/compressors contain internal overload protection.
Complies with 2001 requirements of ASHRAE Standards 90.1

A-WEIGHTED SOUND LEVEL (dBA)

UNIT SIZE – SERIES	STANDARD RATING	TYPICAL OCTAVE BAND SPECTRUM (without tone adjustment)						
		125	250	500	1000	2000	4000	8000
18–30	70	57	57	63	62.5	61	56.5	47.5
24–30	69	56.5	57.5	63.5	61.5	61.5	57	48.5
30–30	71	59.5	60	65	64.5	61.5	58	55.5
36–30	71	60	62	66	65	63	58	51.5
42–30	71	60.5	59.5	63	64	62	58.5	50.5
48–30	72	58.5	62.5	64.5	67	65	61	54.5
60–30	75	59	61	67	69.5	64	59	54.5

NOTE: Tested in accordance with ARI Standard 270–95 (not listed in ARI).

CHARGING SUBCOOLING (TXV-TYPE EXPANSION DEVICE)

UNIT SIZE–SERIES	REQUIRED SUBCOOLING °F (°C)
18–30	12 (6.67)
24–30	11 (6.11)
30–30	11 (6.11)
36–30	11 (6.11)
42–30	10 (5.56)
48–30	10 (5.56)
60–30	11 (6.11)

DIMENSIONS - ENGLISH

UNIT	SERIES	ELECTRICAL CHARACTERISTICS				A	B	C	D	E	F	G	K	L	M	N	P	R	OPERATING WEIGHT (lbs)	SHIPPING WEIGHT (lbs)	SHIPPING DIMENSIONS (L x W x H)
25HPA518	0	X	0	0	0	35 1/2"	33 11/16"	6 1/16"	5/8"	6 13/16"	28 3/4"	11 5/8"	4 3/16"	1 1/8"	19 1/2"	18"	16 3/4"	40"	210	244	37 1/8" X 43 5/16" X 39 3/8"
25HPA524	0	X	0	0	0	35 1/2"	37 1/8"	6 1/16"	5/8"	6 13/16"	28 3/4"	11 5/8"	4 3/16"	1 1/8"	20"	17"	16 1/2"	40"	252	292	37 1/8" X 43 5/16" X 42 3/4"
25HPA530	0	X	0	0	0	35 1/2"	40 1/2"	6 5/16"	3/4"	6 13/16"	28 3/4"	11 5/8"	4"	1 1/8"	20"	17"	18"	40"	289	323	37 1/8" X 43 5/16" X 46 3/16"
25HPA536	0	X	0	0	0	35 1/2"	47 5/16"	6 5/16"	3/4"	6 13/16"	28 3/4"	11 5/8"	4"	1 1/8"	18 1/2"	17 1/2"	20"	40"	292	328	37 1/8" X 43 5/16" X 50 13/16"
25HPA542	0	X	0	0	0	35 1/2"	47 5/16"	6 1/4"	7/8"	6 13/16"	28 3/4"	11 5/8"	4 1/16"	1 1/8"	18 1/2"	17 1/2"	21"	40"	309	345	37 1/8" X 43 5/16" X 50 13/16"
25HPA548	0	X	0	0	0	35 1/2"	47 5/16"	6 1/4"	7/8"	6 13/16"	28 3/4"	11 5/8"	4 1/16"	1 1/8"	19 1/2"	17"	20 1/2"	40"	315	352	37 1/8" X 43 5/16" X 50 13/16"
25HPA560	0	X	0	0	0	35 1/2"	43 7/8"	6 1/4"	7/8"	6 13/16"	28 3/4"	11 5/8"	4 1/16"	1 1/8"	19 1/2"	17"	18 1/2"	40"	326	362	37 1/8" X 43 5/16" X 49 9/16"
		208-230-1-60	230-1-60	208/230-3-60	460-3-60																

X = YES
O = NO

NOTES:

1. ALLOW 30" CLEARANCE TO SERVICE SIDE OF UNIT, 48" ABOVE UNIT, 6" ON ONE SIDE, 12" ON REMAINING SIDE, AND 24" BETWEEN UNITS FOR PROPER AIRFLOW.
2. MINIMUM OUTDOOR OPERATING AMBIENT IN COOLING MODE IS 55°F, MAX. 125°F.
3. SERIES DESIGNATION IS THE 10TH POSITION OF THE UNIT MODEL NUMBER.
4. CENTER OF GRAVITY ⊕.
5. ALL DIMENSIONS ARE IN "INCHES" UNLESS NOTED.

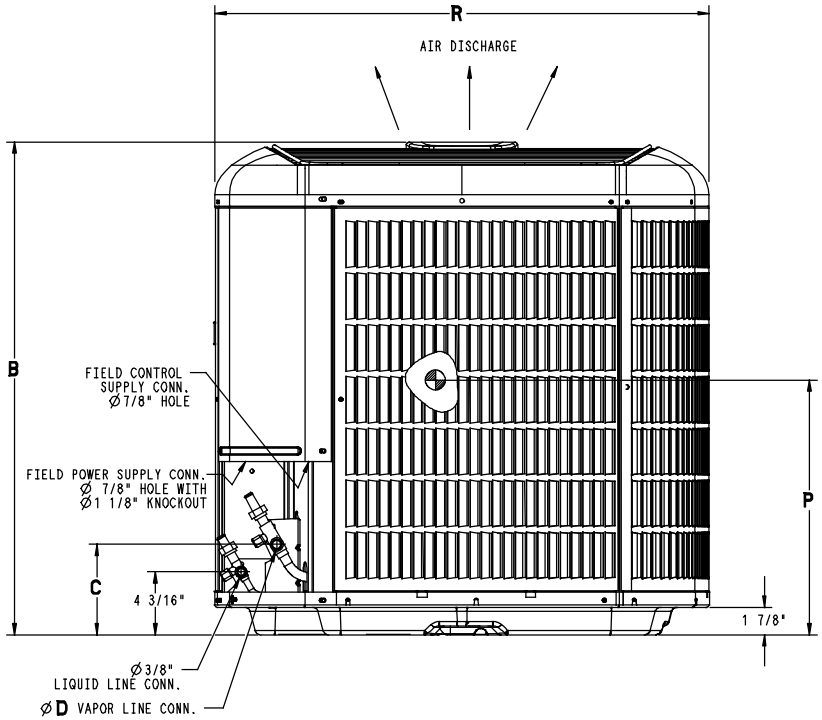

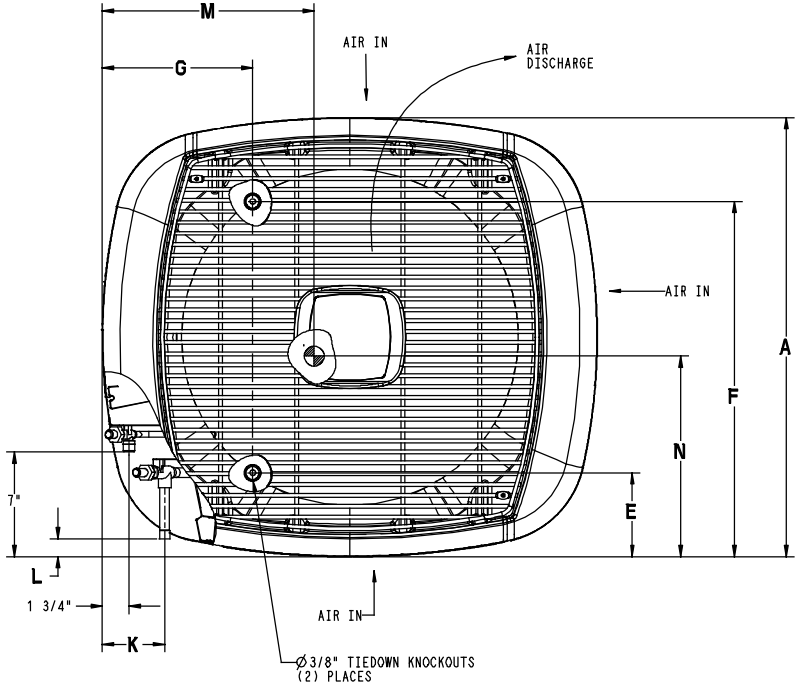

UNIT SIZE	MINIMUM MOUNTING PAD DIMENSIONS
-	29 1/2" X 33"
18 THRU 60	36 1/2" X 40"

DIMENSIONS - SI

UNIT	SERIES	ELECTRICAL CHARACTERISTICS				A	B	C	D	E	F	G	K	L	M	N	P	R	OPERATING WEIGHT (Kgs)	SHIPPING WEIGHT (Kgs)	SHIPPING DIMENSIONS (L x W x H)
25HPA518	0	X	0	0	0	901.7	855.7	154.0	15.9	173.0	730.2	295.3	106.4	28.6	495.3	457.2	425.4	1016.0	95.2	110.7	943.0 X 1100.2 X 1000.1
25HPA524	0	X	0	0	0	901.7	943.0	154.0	15.9	173.0	730.2	295.3	106.4	28.6	508.0	431.8	419.1	1016.0	114.3	132.4	943.0 X 1100.2 X 1085.8
25HPA530	0	X	0	0	0	901.7	1028.7	160.4	19.0	173.0	730.2	295.3	101.6	28.6	508.0	431.8	457.2	1016.0	131.1	146.5	943.0 X 1100.2 X 1173.2
25HPA536	0	X	0	0	0	901.7	1201.8	160.4	19.0	173.0	730.2	295.3	101.6	28.6	469.9	444.5	508.0	1016.0	132.4	148.8	943.0 X 1100.2 X 1290.6
25HPA542	0	X	0	0	0	901.7	1201.8	158.8	22.2	173.0	730.2	295.3	103.2	28.6	469.9	444.5	533.4	1016.0	140.2	156.5	943.0 X 1100.2 X 1290.6
25HPA548	0	X	0	0	0	901.7	1201.8	158.8	22.2	173.0	730.2	295.3	103.2	28.6	495.3	431.8	520.7	1016.0	142.9	159.7	943.0 X 1100.2 X 1290.6
25HPA560	0	X	0	0	0	901.7	1114.4	158.8	22.2	173.0	730.2	295.3	103.2	28.6	495.3	431.8	469.9	1016.0	147.9	164.2	943.0 X 1100.2 X 1258.9
		208-230-1-60	230-1-60	208/230-3-60	460-3-60																

X = YES
O = NO

NOTES:

1. ALLOW 762.0 CLEARANCE TO SERVICE SIDE OF UNIT, 1219.2 ABOVE UNIT, 152.4 ON ONE SIDE, 304.8 ON REMAINING SIDE, AND 609.6 BETWEEN UNITS FOR PROPER AIRFLOW.
2. MINIMUM OUTDOOR OPERATING AMBIENT IN COOLING MODE IS 13°C, MAX. 52°C.
3. SERIES DESIGNATION IS THE 10TH POSITION OF THE UNIT MODEL NUMBER.
4. CENTER OF GRAVITY ⊕.
5. ALL DIMENSIONS ARE IN "MM" UNLESS NOTED.

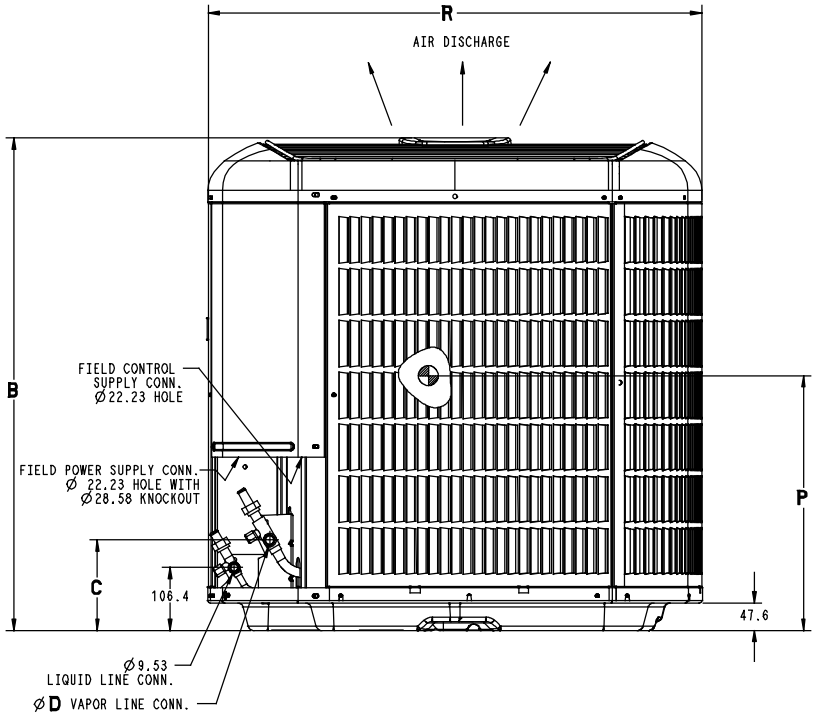

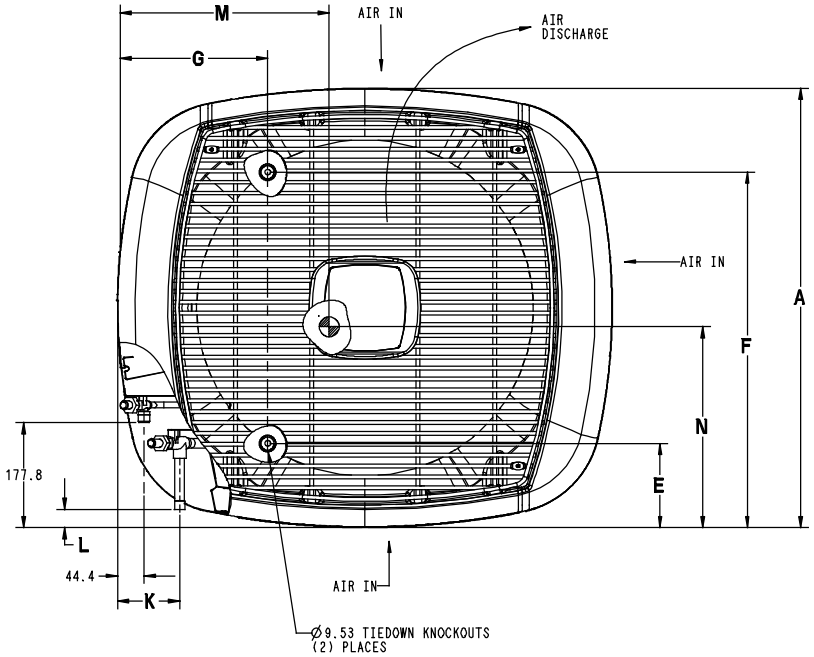

UNIT SIZE	MINIMUM MOUNTING PAD DIMENSIONS
-	749.3 X 838.2
18 THRU 60	927.1 X 1016.0

25HPA5 BLANCE POINT WORKSHEET

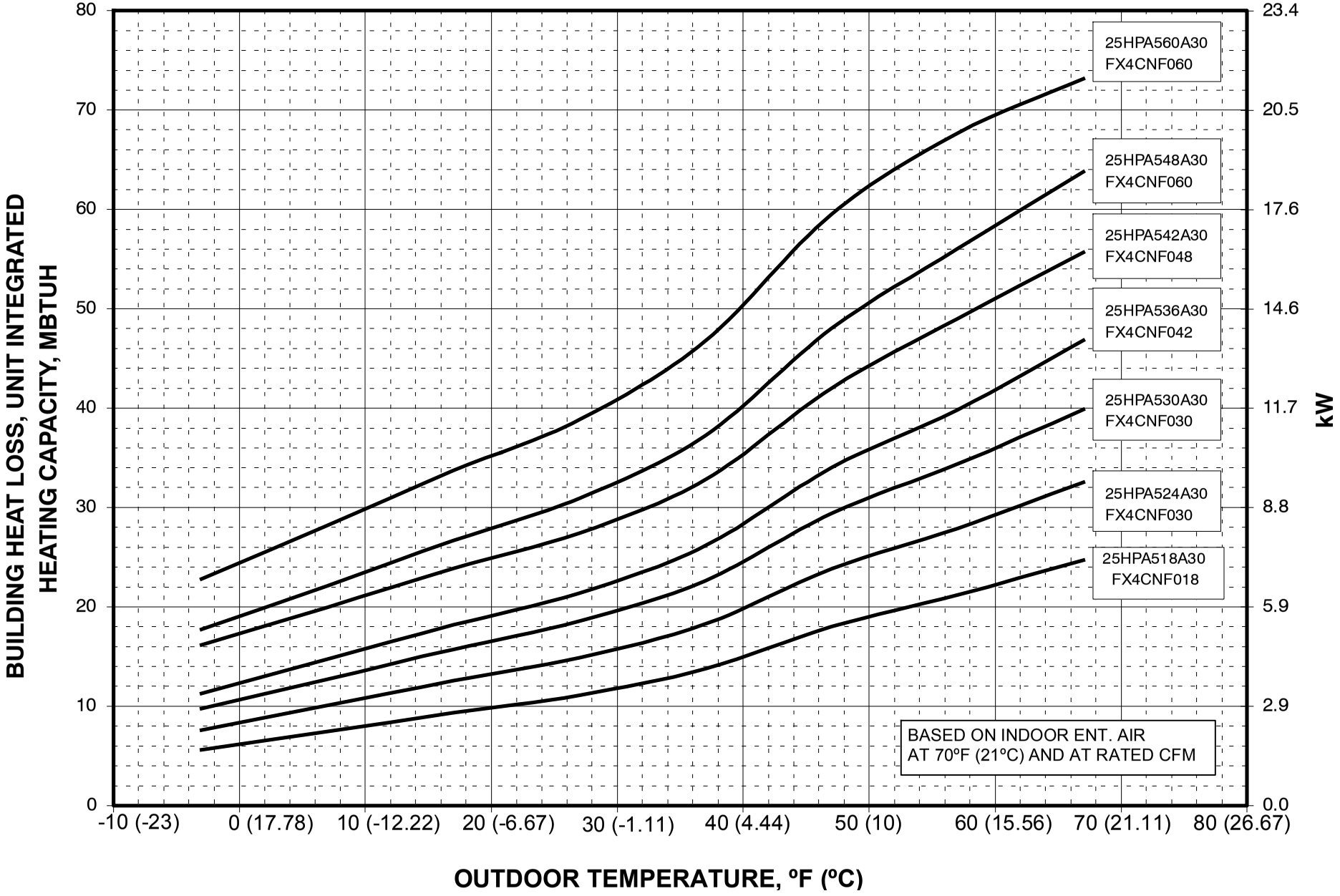

CLEARANCES

Clearances (various examples)

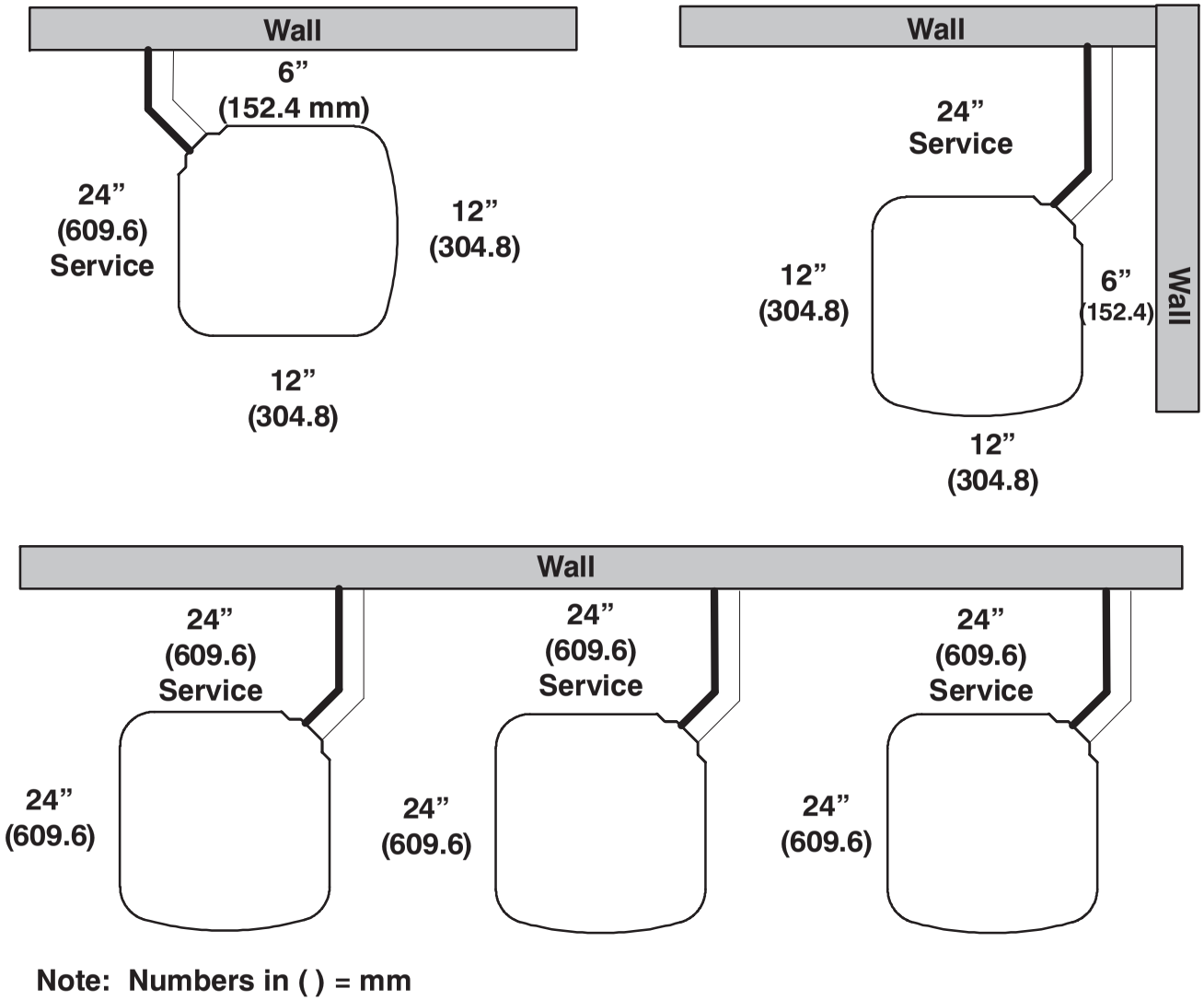

Note: Numbers in ( ) = mm

A07833

COMBINATION RATINGS

ARI Ref. No.	Model Number	Coil Model Number	Furnace Model Number	Cooling Capacity	EER	SEER	High Temp		HSPF	Low Temp	
							E Capacity	E COP		H Capacity	H COP
904121	25HPA518A30	†FX4CNF018		17800	12.0	15.0	18000	3.62	8.2	10400	2.34
1258705	25HPA518A30	FE4ANF002+UI		18000	12.5	15.5	17800	3.68	8.3	10300	2.38
904145	25HPA518A30	FF1ENP018		17400	10.9	13.2	18000	3.40	7.9	10800	2.22
905951	25HPA518A30	FF1ENP024		17700	11.1	13.5	18000	3.46	8.0	10900	2.24
905172	25HPA518A30	FV4BNF002		18000	12.5	15.5	17800	3.68	8.3	10300	2.38
905541	25HPA518A30	FX4CNF024		18000	12.4	15.0	18000	3.66	8.3	10400	2.38
903994	25HPA518A30	FY4ANF018		17400	10.8	13.0	18000	3.40	8.0	10800	2.20
904525	25HPA518A30	FY4ANF024		17600	10.9	13.2	18000	3.40	8.0	10900	2.22
903221	25HPA518A30	CAP**1814A**	58CV(A,X)070–12	17300	12.0	14.5	17400	3.38	7.8	10100	2.26
3015928	25HPA518A30	CAP**1814A**	58PH*045–08	17600	12.0	14.5	17700	3.50	8.0	10300	2.32
905833	25HPA518A30	CAP**1814A**+TDR		17400	10.8	13.0	18000	3.36	7.8	10800	2.20
904270	25HPA518A30	CAP**2414A**	58CV(A,X)070–12	17600	12.0	15.0	17600	3.52	8.0	10200	2.32
3015929	25HPA518A30	CAP**2414A**	58PH*045–08	18000	12.0	15.3	17900	3.66	8.2	10400	2.38
904368	25HPA518A30	CAP**2414A**+TDR		17800	11.0	13.5	18000	3.50	8.0	10900	2.26
905048	25HPA518A30	CAP**2417A**	58CV(A,X)090–16	17700	12.0	15.0	17600	3.56	8.1	10200	2.34
3106968	25HPA518A30	CAP**2417A**	58MEB040–12	18000	12.5	15.5	18000	3.82	8.5	10400	2.44
3106969	25HPA518A30	CAP**2417A**	58MEB060–12	18000	12.5	15.5	17900	3.74	8.4	10400	2.42
1391526	25HPA518A30	CAP**2417A**	58MV(B,C)060–14	17700	12.0	15.0	17600	3.54	8.1	10200	2.34
1116728	25HPA518A30	CAP**2417A**	58UVB060–14	17700	12.0	15.0	17600	3.54	8.1	10200	2.34
903720	25HPA518A30	CAP**2417A**+TDR		17800	11.0	13.5	18000	3.50	8.0	10900	2.26
905463	25HPA518A30	CNPF*2418A**+TDR		17700	10.8	13.5	18000	3.54	8.1	10900	2.28
905071	25HPA518A30	CNPH*2417A**	58CV(A,X)070–12	17600	12.0	15.0	17600	3.56	8.1	10300	2.34
905816	25HPA518A30	CNPH*2417A**	58CV(A,X)090–16	17700	12.0	15.0	17600	3.60	8.2	10300	2.34
3106972	25HPA518A30	CNPH*2417A**	58MEB040–12	18000	12.5	15.5	18000	3.80	8.5	10400	2.42
3106973	25HPA518A30	CNPH*2417A**	58MEB060–12	17900	12.0	15.5	17900	3.70	8.3	10300	2.38
1391581	25HPA518A30	CNPH*2417A**	58MV(B,C)060–14	17600	12.0	15.0	17600	3.58	8.2	10300	2.34
1393003	25HPA518A30	CNPH*2417A**	58MV(B,C)080–14	17700	12.0	15.0	17600	3.60	8.2	10300	2.34
3015932	25HPA518A30	CNPH*2417A**	58PH*045–08	17900	12.0	15.3	18000	3.68	8.2	10400	2.38
905633	25HPA518A30	CNPH*2417A**+TDR		17700	10.8	13.5	18000	3.54	8.1	10900	2.28
906278	25HPA518A30	CNPV*1814A**	58CV(A,X)070–12	17300	12.0	15.0	17400	3.50	8.0	10200	2.30
3015930	25HPA518A30	CNPV*1814A**	58PH*045–08	17700	12.0	14.5	17800	3.58	8.0	10300	2.34
905539	25HPA518A30	CNPV*1814A**+TDR		17400	10.8	13.0	18000	3.50	8.0	10900	2.26
904490	25HPA518A30	CNPV*2414A**	58CV(A,X)070–12	17600	12.0	15.0	17600	3.56	8.1	10300	2.34
3015931	25HPA518A30	CNPV*2414A**	58PH*045–08	17900	12.0	15.3	18000	3.68	8.2	10400	2.38
904095	25HPA518A30	CNPV*2414A**+TDR		17700	10.8	13.5	18000	3.54	8.1	10900	2.28
904588	25HPA518A30	CNPV*2417A**	58CV(A,X)090–16	17700	12.0	15.0	17600	3.60	8.2	10300	2.34
3106970	25HPA518A30	CNPV*2417A**	58MEB040–12	18000	12.5	15.5	18000	3.80	8.5	10400	2.42
3106971	25HPA518A30	CNPV*2417A**	58MEB060–12	17900	12.0	15.5	17900	3.70	8.3	10300	2.38
1391752	25HPA518A30	CNPV*2417A**	58MV(B,C)060–14	17700	12.0	15.0	17600	3.58	8.2	10300	2.34
1116731	25HPA518A30	CNPV*2417A**	58UVB060–14	17700	12.0	15.0	17600	3.58	8.2	10300	2.34
906289	25HPA518A30	CNPV*2417A**+TDR		17700	10.8	13.5	18000	3.54	8.1	10900	2.28
905220	25HPA518A30	CSPH*2412A**	58CV(A,X)070–12	17600	12.0	15.0	17600	3.54	8.1	10300	2.34
904011	25HPA518A30	CSPH*2412A**	58CV(A,X)090–16	17700	12.0	15.0	17600	3.58	8.2	10300	2.34
3106974	25HPA518A30	CSPH*2412A**	58MEB040–12	18000	12.5	15.5	18000	3.74	8.4	10400	2.40
3106975	25HPA518A30	CSPH*2412A**	58MEB060–12	17900	12.0	15.5	17700	3.60	8.2	10200	2.36
1391948	25HPA518A30	CSPH*2412A**	58MV(B,C)060–14	17600	12.0	15.0	17600	3.56	8.1	10300	2.34
1393371	25HPA518A30	CSPH*2412A**	58MV(B,C)080–14	17700	12.0	15.0	17600	3.58	8.2	10300	2.34
3015933	25HPA518A30	CSPH*2412A**	58PH*045–08	18000	12.0	15.3	17900	3.66	8.2	10400	2.36
904844	25HPA518A30	CSPH*2412A**+TDR		17700	10.8	13.5	18000	3.54	8.1	11000	2.28
906395	25HPA524A30	†FX4CNF030		23600	12.5	15.5	23800	3.78	8.5	14000	2.52
1258699	25HPA524A30	FE4AN(B,F)003+UI		23400	13.0	16.0	23400	3.72	8.5	13700	2.52
1258702	25HPA524A30	FE4ANF002+UI		23400	12.5	15.5	23400	3.72	8.5	13800	2.50
906096	25HPA524A30	FE5ANB004		24000	13.5	16.0	23800	3.98	9.0	13800	2.62
1258708	25HPA524A30	FE5ANB004+UI		24000	13.5	16.0	23800	3.98	9.0	13800	2.62
903885	25HPA524A30	FF1ENP024		23000	11.2	13.5	24000	3.48	8.1	14600	2.34
906323	25HPA524A30	FF1ENP030		23000	11.2	13.5	24000	3.50	8.1	14500	2.34
905063	25HPA524A30	FV4BNF002		23400	12.5	15.5	23400	3.72	8.5	13800	2.50
905144	25HPA524A30	FV4BNF003		23400	13.0	16.0	23400	3.72	8.5	13700	2.52
904063	25HPA524A30	FX4CNF024		23200	12.4	15.0	23600	3.66	8.4	14000	2.46
905259	25HPA524A30	FY4ANF024		22800	11.4	13.5	24000	3.48	8.0	14400	2.34
904332	25HPA524A30	FY4ANF030		23000	11.5	14.0	24000	3.58	8.2	14500	2.38
904098	25HPA524A30	CAP**2414A**	58CV(A,X)070–12	22800	12.5	15.0	23200	3.56	8.2	13700	2.44
3015934	25HPA524A30	CAP**2414A**	58PH*045–08	23000	12.0	14.5	23200	3.62	8.2	13900	2.46
904073	25HPA524A30	CAP**2414A**+TDR		23000	11.2	14.0	24000	3.54	8.2	14600	2.36
903061	25HPA524A30	CAP**2417A**	58CV(A,X)090–16	23000	12.5	15.5	23200	3.60	8.3	13700	2.46
3106976	25HPA524A30	CAP**2417A**	58MEB040–12	23400	12.5	15.5	23600	3.76	8.5	13900	2.52
3106977	25HPA524A30	CAP**2417A**	58MEB060–12	23400	12.5	15.5	23600	3.78	8.5	13900	2.52
3106978	25HPA524A30	CAP**2417A**	58MEB080–12	23400	12.5	15.5	23600	3.74	8.5	13900	2.50
1391523	25HPA524A30	CAP**2417A**	58MV(B,C)060–14	23000	12.5	15.0	23200	3.58	8.2	13700	2.44
1116734	25HPA524A30	CAP**2417A**	58UVB060–14	23000	12.5	15.0	23200	3.58	8.2	13700	2.44
905879	25HPA524A30	CAP**2417A**+TDR		23000	11.2	14.0	24000	3.54	8.2	14600	2.36
903975	25HPA524A30	CAP**3014A**	58CV(A,X)070–12	23200	12.5	15.5	23200	3.58	8.2	13700	2.46
3015935	25HPA524A30	CAP**3014A**	58PH*045–08	23000	12.5	15.5	23400	3.66	8.2	13900	2.48
905712	25HPA524A30	CAP**3014A**+TDR		23200	11.5	14.0	24000	3.56	8.2	14600	2.38
904026	25HPA524A30	CAP**3017A**	58CV(A,X)090–16	23200	12.5	15.5	23200	3.64	8.3	13700	2.48
3106979	25HPA524A30	CAP**3017A**	58MEB040–12	23800	12.5	15.5	23600	3.82	8.6	14000	2.56

See notes on page 22

COMBINATION RATINGS CONTINUED

ARI Ref. No.	Model Number	Coil Model Number	Furnace Model Number	Cooling Capacity	EER	SEER	High Temp		HSPF	Low Temp	
							E Capacity	E COP		H Capacity	H COP
3106980	25HPA524A30	CAP**3017A**	58MEB060–12	23800	12.5	15.5	23800	3.82	8.6	14000	2.56
3106981	25HPA524A30	CAP**3017A**	58MEB080–12	23600	12.5	15.5	23600	3.78	8.5	13900	2.54
1391487	25HPA524A30	CAP**3017A**	58MV(B,C)060–14	23200	12.5	15.5	23200	3.62	8.3	13700	2.46
1116737	25HPA524A30	CAP**3017A**	58UVB060–14	23200	12.5	15.5	23200	3.62	8.3	13700	2.46
903251	25HPA524A30	CAP**3017A**+TDR		23200	11.5	14.0	24000	3.56	8.2	14600	2.38
905526	25HPA524A30	CNPF*2418A**+TDR		23000	11.2	13.5	24000	3.60	8.3	14600	2.38
903095	25HPA524A30	CNPH*2417A**	58CV(A,X)070–12	22800	12.5	15.0	23200	3.60	8.3	13800	2.44
904261	25HPA524A30	CNPH*2417A**	58CV(A,X)090–16	23000	12.5	15.0	23200	3.64	8.3	13800	2.46
904640	25HPA524A30	CNPH*2417A**	58CV(A,X)110–20	23000	12.5	15.0	23200	3.64	8.3	13800	2.46
903443	25HPA524A30	CNPH*2417A**	58CV(A,X)135–22	23000	12.5	15.0	23200	3.64	8.3	13800	2.46
903440	25HPA524A30	CNPH*2417A**	58CV(A,X)155–22	23000	12.5	15.0	23200	3.64	8.3	13800	2.46
3106988	25HPA524A30	CNPH*2417A**	58MEB040–12	23200	12.5	15.5	23600	3.74	8.5	13900	2.50
3106989	25HPA524A30	CNPH*2417A**	58MEB060–12	23200	12.5	15.5	23600	3.76	8.5	13900	2.50
3106990	25HPA524A30	CNPH*2417A**	58MEB080–12	23200	12.5	15.5	23600	3.72	8.5	13900	2.50
1391584	25HPA524A30	CNPH*2417A**	58MV(B,C)060–14	22800	12.5	15.0	23200	3.62	8.3	13800	2.46
1393006	25HPA524A30	CNPH*2417A**	58MV(B,C)080–14	23000	12.5	15.0	23200	3.64	8.3	13800	2.46
1394435	25HPA524A30	CNPH*2417A**	58MV(B,C)080–20	22800	12.5	15.0	23200	3.64	8.3	13800	2.46
1396171	25HPA524A30	CNPH*2417A**	58MV(B,C)100–20	23000	12.5	15.0	23200	3.66	8.3	13800	2.46
1397908	25HPA524A30	CNPH*2417A**	58MV(B,C)120–20	22800	12.0	15.0	23200	3.60	8.3	13800	2.44
904201	25HPA524A30	CNPH*2417A**	58MVB040–14	23000	12.0	15.0	23200	3.64	8.3	13800	2.46
3015938	25HPA524A30	CNPH*2417A**	58PH*045–08	22800	12.0	14.5	23400	3.66	8.2	13900	2.46
904197	25HPA524A30	CNPH*2417A**+TDR		23000	11.5	14.0	24000	3.60	8.3	14600	2.38
904215	25HPA524A30	CNPH*3017A**	58CV(A,X)070–12	23200	12.5	15.5	23200	3.60	8.3	13700	2.46
906445	25HPA524A30	CNPH*3017A**	58CV(A,X)090–16	23200	12.5	15.5	23200	3.64	8.3	13700	2.48
906130	25HPA524A30	CNPH*3017A**	58CV(A,X)110–20	23200	12.5	15.5	23200	3.64	8.3	13700	2.48
905832	25HPA524A30	CNPH*3017A**	58CV(A,X)135–22	23200	12.5	15.5	23200	3.64	8.3	13700	2.48
903111	25HPA524A30	CNPH*3017A**	58CV(A,X)155–22	23200	12.5	15.5	23200	3.64	8.4	13700	2.48
3106991	25HPA524A30	CNPH*3017A**	58MEB040–12	23800	12.5	15.5	23600	3.80	8.6	14000	2.56
3106992	25HPA524A30	CNPH*3017A**	58MEB060–12	23800	12.5	15.5	23800	3.82	8.6	14000	2.56
3106993	25HPA524A30	CNPH*3017A**	58MEB080–12	23600	12.5	15.5	23600	3.78	8.5	13900	2.54
1391617	25HPA524A30	CNPH*3017A**	58MV(B,C)060–14	23200	12.5	15.5	23200	3.62	8.3	13700	2.48
1393039	25HPA524A30	CNPH*3017A**	58MV(B,C)080–14	23200	12.5	15.5	23200	3.62	8.3	13800	2.48
1394468	25HPA524A30	CNPH*3017A**	58MV(B,C)080–20	23200	12.5	15.5	23200	3.62	8.3	13700	2.48
1396204	25HPA524A30	CNPH*3017A**	58MV(B,C)100–20	23200	12.5	15.5	23200	3.64	8.4	13800	2.48
1397941	25HPA524A30	CNPH*3017A**	58MV(B,C)120–20	23200	12.5	15.5	23200	3.60	8.3	13700	2.46
904382	25HPA524A30	CNPH*3017A**	58MVB040–14	23200	12.5	15.5	23200	3.62	8.3	13800	2.48
3015939	25HPA524A30	CNPH*3017A**	58PH*045–08	23200	12.5	15.5	23400	3.70	8.3	14000	2.50
906260	25HPA524A30	CNPH*3017A**+TDR		23200	11.5	14.0	24000	3.58	8.2	14600	2.38
906625	25HPA524A30	CNPV*2414A**	58CV(A,X)070–12	22800	12.5	15.0	23200	3.60	8.3	13800	2.44
3015936	25HPA524A30	CNPV*2414A**	58PH*045–08	22800	12.0	15.0	23200	3.66	8.2	13900	2.46
903872	25HPA524A30	CNPV*2414A**+TDR		23000	11.5	14.0	24000	3.60	8.3	14600	2.38
905799	25HPA524A30	CNPV*2417A**	58CV(A,X)090–16	23000	12.5	15.0	23200	3.64	8.3	13800	2.46
3106982	25HPA524A30	CNPV*2417A**	58MEB040–12	23200	12.5	15.5	23600	3.74	8.5	13900	2.50
3106983	25HPA524A30	CNPV*2417A**	58MEB060–12	23200	12.5	15.5	23600	3.76	8.5	13900	2.50
3106984	25HPA524A30	CNPV*2417A**	58MEB080–12	23200	12.5	15.5	23600	3.72	8.5	13900	2.50
1391755	25HPA524A30	CNPV*2417A**	58MV(B,C)060–14	22800	12.5	15.0	23200	3.62	8.3	13800	2.46
1116740	25HPA524A30	CNPV*2417A**	58UVB060–14	22800	12.5	15.0	23200	3.62	8.3	13800	2.46
903104	25HPA524A30	CNPV*2417A**+TDR		23000	11.2	14.0	24000	3.60	8.3	14600	2.38
904598	25HPA524A30	CNPV*3014A**	58CV(A,X)070–12	23200	12.5	15.5	23200	3.60	8.3	13700	2.46
3015937	25HPA524A30	CNPV*3014A**	58PH*045–08	23200	12.5	15.0	23200	3.64	8.2	13900	2.46
905133	25HPA524A30	CNPV*3014A**+TDR		23200	11.5	14.0	24000	3.58	8.2	14600	2.38
904075	25HPA524A30	CNPV*3017A**	58CV(A,X)090–16	23200	12.5	15.5	23200	3.64	8.3	13700	2.48
3106985	25HPA524A30	CNPV*3017A**	58MEB040–12	23800	12.5	15.5	23600	3.80	8.6	14000	2.56
3106986	25HPA524A30	CNPV*3017A**	58MEB060–12	23800	12.5	15.5	23800	3.82	8.6	14000	2.56
3106987	25HPA524A30	CNPV*3017A**	58MEB080–12	23600	12.5	15.5	23600	3.78	8.5	13900	2.54
1391788	25HPA524A30	CNPV*3017A**	58MV(B,C)060–14	23200	12.5	15.5	23200	3.62	8.3	13700	2.48
1116743	25HPA524A30	CNPV*3017A**	58UVB060–14	23200	12.5	15.5	23200	3.62	8.3	13700	2.48
904031	25HPA524A30	CNPV*3017A**+TDR		23200	11.5	14.0	24000	3.58	8.2	14600	2.38
905354	25HPA524A30	CSPH*2412A**	58CV(A,X)070–12	23000	12.5	15.0	23200	3.62	8.3	13800	2.46
904692	25HPA524A30	CSPH*2412A**	58CV(A,X)090–16	23000	12.5	15.5	23200	3.66	8.4	13800	2.48
904124	25HPA524A30	CSPH*2412A**	58CV(A,X)110–20	23000	12.5	15.0	23200	3.64	8.3	13900	2.46
903498	25HPA524A30	CSPH*2412A**	58CV(A,X)135–22	23000	12.5	15.0	23200	3.64	8.4	13800	2.46
904866	25HPA524A30	CSPH*2412A**	58CV(A,X)155–22	23000	12.5	15.0	23200	3.66	8.4	13800	2.46
3106994	25HPA524A30	CSPH*2412A**	58MEB040–12	23400	12.5	15.5	23600	3.74	8.5	13900	2.50
3106995	25HPA524A30	CSPH*2412A**	58MEB060–12	23600	12.5	15.5	23600	3.76	8.5	13900	2.50
3106996	25HPA524A30	CSPH*2412A**	58MEB080–12	23400	12.5	15.5	23600	3.72	8.5	13900	2.50
1391951	25HPA524A30	CSPH*2412A**	58MV(B,C)060–14	23000	12.5	15.5	23200	3.64	8.3	13800	2.46
1393374	25HPA524A30	CSPH*2412A**	58MV(B,C)080–14	23000	12.5	15.0	23200	3.64	8.3	13900	2.46
1394871	25HPA524A30	CSPH*2412A**	58MV(B,C)080–20	23000	12.5	15.0	23200	3.64	8.3	13800	2.46
1396607	25HPA524A30	CSPH*2412A**	58MV(B,C)100–20	23000	12.5	15.5	23200	3.66	8.4	13900	2.46
1398261	25HPA524A30	CSPH*2412A**	58MV(B,C)120–20	23000	12.5	15.0	23200	3.60	8.3	13800	2.44
903607	25HPA524A30	CSPH*2412A**	58MVB040–14	23000	12.0	15.0	23200	3.64	8.3	13900	2.46
3015940	25HPA524A30	CSPH*2412A**	58PH*045–08	23000	12.5	15.0	23400	3.64	8.2	13900	2.46
903543	25HPA524A30	CSPH*2412A**+TDR		23000	11.5	14.0	24000	3.64	8.3	14600	2.40
905677	25HPA524A30	CSPH*3012A**	58CV(A,X)070–12	23200	12.5	15.5	23200	3.60	8.3	13700	2.46
902998	25HPA524A30	CSPH*3012A**	58CV(A,X)090–16	23200	12.5	15.5	23200	3.64	8.3	13700	2.48
905404	25HPA524A30	CSPH*3012A**	58CV(A,X)110–20	23200	12.5	15.5	23200	3.62	8.3	13800	2.46
906646	25HPA524A30	CSPH*3012A**	58CV(A,X)135–22	23200	12.5	15.5	23200	3.64	8.3	13800	2.48

See notes on page 22

COMBINATION RATINGS CONTINUED

ARI Ref. No.	Model Number	Coil Model Number	Furnace Model Number	Cooling Capacity	EER	SEER	High Temp		HSPF	Low Temp	
							E Capacity	E COP		H Capacity	H COP
905262	25HPA524A30	CSPH*3012A**	58CV(A,X)155–22	23200	12.5	15.5	23200	3.64	8.3	13800	2.48
3106997	25HPA524A30	CSPH*3012A**	58MEB040–12	23800	12.5	15.5	23600	3.78	8.5	13900	2.54
3106998	25HPA524A30	CSPH*3012A**	58MEB060–12	23800	12.5	15.5	23600	3.80	8.5	14000	2.54
3106999	25HPA524A30	CSPH*3012A**	58MEB080–12	23600	12.5	15.5	23600	3.74	8.5	13900	2.52
1391984	25HPA524A30	CSPH*3012A**	58MV(B,C)060–14	23200	12.5	15.5	23200	3.60	8.3	13700	2.46
1393407	25HPA524A30	CSPH*3012A**	58MV(B,C)080–14	23200	12.5	15.5	23200	3.62	8.3	13800	2.46
1394904	25HPA524A30	CSPH*3012A**	58MV(B,C)080–20	23200	12.5	15.5	23200	3.62	8.3	13800	2.46
1396640	25HPA524A30	CSPH*3012A**	58MV(B,C)100–20	23200	12.5	15.5	23200	3.64	8.3	13800	2.48
1398294	25HPA524A30	CSPH*3012A**	58MV(B,C)120–20	23200	12.5	15.5	23200	3.60	8.3	13800	2.46
903968	25HPA524A30	CSPH*3012A**	58MVB040–14	23200	12.5	15.5	23200	3.62	8.3	13800	2.46
3015941	25HPA524A30	CSPH*3012A**	58PH*045–08	23400	12.5	15.5	23400	3.68	8.2	13900	2.48
905012	25HPA524A30	CSPH*3012A**+TDR		23200	11.5	14.0	24000	3.58	8.3	14600	2.38
904689	25HPA530A30	†FX4CNF030		29200	12.5	15.5	29400	3.80	8.5	17200	2.50
1258714	25HPA530A30	FE4AN(B,F)003+UI		29000	13.2	16.0	28800	3.80	8.5	16700	2.52
1258717	25HPA530A30	FE4AN(B,F)005+UI		30000	13.5	16.0	29200	3.98	9.0	16900	2.60
1258711	25HPA530A30	FE4ANF002+UI		29000	13.0	15.5	29000	3.78	8.5	16900	2.50
904812	25HPA530A30	FE5ANB004		30000	13.5	16.0	29200	4.10	9.0	16900	2.64
1258720	25HPA530A30	FE5ANB004+UI		30000	13.5	16.0	29200	4.10	9.0	16900	2.64
905013	25HPA530A30	FF1ENP030		28600	11.5	14.0	29800	3.60	8.1	17600	2.38
906470	25HPA530A30	FF1ENP036		29000	11.5	14.0	30000	3.66	8.3	17700	2.42
3017912	25HPA530A30	FV4BN(B,F)003		29200	13.0	16.0	28800	3.80	8.5	16700	2.52
3017913	25HPA530A30	FV4BN(B,F)005		30000	13.5	16.0	28800	3.98	8.5	16900	2.60
904012	25HPA530A30	FV4BNF002		29000	13.0	15.5	29000	3.78	8.5	16900	2.50
903572	25HPA530A30	FX4CN(B,F)036		29400	12.5	15.5	29600	3.84	8.6	17300	2.52
903657	25HPA530A30	FY4ANF030		28800	11.5	14.0	30000	3.68	8.4	17700	2.40
905018	25HPA530A30	FY4ANF036		28800	11.5	13.5	30000	3.64	8.2	17800	2.40
903067	25HPA530A30	CAP**3014A**	58CV(A,X)070–12	28800	12.5	15.5	28800	3.66	8.2	16900	2.46
903533	25HPA530A30	CAP**3014A**+TDR		29000	11.5	14.0	30000	3.64	8.2	17700	2.40
905896	25HPA530A30	CAP**3017A**	58CV(A,X)090–16	28800	13.0	15.5	28800	3.70	8.3	16700	2.48
3107000	25HPA530A30	CAP**3017A**	58MEB040–12	29200	13.0	15.5	29000	3.80	8.4	16900	2.52
3107001	25HPA530A30	CAP**3017A**	58MEB060–12	29200	13.0	15.5	29200	3.80	8.4	17000	2.52
3107002	25HPA530A30	CAP**3017A**	58MEB080–12	29200	13.0	15.5	29000	3.78	8.4	16900	2.50
3107003	25HPA530A30	CAP**3017A**	58MEB080–16	29400	13.0	15.5	29200	3.82	8.5	17100	2.52
1391490	25HPA530A30	CAP**3017A**	58MV(B,C)060–14	28800	13.0	15.5	28800	3.66	8.3	16800	2.46
3015942	25HPA530A30	CAP**3017A**	58PH*070–16	29000	12.5	15.5	29200	3.72	8.2	17100	2.46
1116746	25HPA530A30	CAP**3017A**	58UVB060–14	28800	13.0	15.5	28800	3.66	8.3	16800	2.46
905440	25HPA530A30	CAP**3017A**+TDR		29000	11.5	14.0	30000	3.64	8.2	17700	2.40
905113	25HPA530A30	CAP**3614A**	58CV(A,X)070–12	27800	12.5	15.0	28000	3.68	8.2	16900	2.46
904209	25HPA530A30	CAP**3614A**+TDR		28000	12.0	14.0	29000	3.68	8.2	17800	2.42
905177	25HPA530A30	CAP**3617A**	58CV(A,X)090–16	29000	13.0	15.5	28800	3.72	8.4	16700	2.50
3107004	25HPA530A30	CAP**3617A**	58MEB040–12	29400	13.0	15.5	29200	3.84	8.5	17000	2.54
3107005	25HPA530A30	CAP**3617A**	58MEB060–12	29400	13.0	15.5	29200	3.84	8.5	17000	2.54
3107006	25HPA530A30	CAP**3617A**	58MEB080–12	29200	13.0	15.5	29000	3.82	8.4	16900	2.52
3107007	25HPA530A30	CAP**3617A**	58MEB080–16	29400	13.0	15.5	29400	3.86	8.5	17100	2.54
1391450	25HPA530A30	CAP**3617A**	58MV(B,C)060–14	28800	13.0	15.5	28800	3.70	8.3	16800	2.48
3015943	25HPA530A30	CAP**3617A**	58PH*070–16	29000	12.5	15.5	29200	3.74	8.3	17100	2.48
1116749	25HPA530A30	CAP**3617A**	58UVB060–14	28800	13.0	15.5	28800	3.70	8.3	16800	2.48
903501	25HPA530A30	CAP**3617A**+TDR		29000	12.0	14.0	30000	3.68	8.3	17800	2.42
903048	25HPA530A30	CAP**3621A**	58CV(A,X)110–20	29000	13.0	15.5	28800	3.76	8.4	16800	2.50
1392940	25HPA530A30	CAP**3621A**	58MV(B,C)080–14	29000	13.0	15.5	28800	3.72	8.3	16800	2.48
1394384	25HPA530A30	CAP**3621A**	58MV(B,C)080–20	29000	13.0	15.5	28800	3.72	8.3	16800	2.48
1396120	25HPA530A30	CAP**3621A**	58MV(B,C)100–20	29000	13.0	15.5	28800	3.72	8.4	16800	2.50
3015944	25HPA530A30	CAP**3621A**	58PH*090–16	29200	13.0	15.5	29200	3.84	8.4	17000	2.52
1116752	25HPA530A30	CAP**3621A**	58UVB080–14	29000	13.0	15.5	28800	3.72	8.3	16800	2.48
1116755	25HPA530A30	CAP**3621A**	58UVB080–20	29000	13.0	15.5	28800	3.72	8.3	16800	2.48
1116758	25HPA530A30	CAP**3621A**	58UVB100–20	29000	13.0	15.5	28800	3.72	8.4	16800	2.50
905242	25HPA530A30	CAP**3621A**+TDR		29000	12.0	14.0	30000	3.68	8.2	17800	2.42
904438	25HPA530A30	CNPF*3618A**+TDR		29000	12.0	14.0	30000	3.66	8.2	17800	2.40
904774	25HPA530A30	CNPH*3017A**	58CV(A,X)070–12	28800	12.5	15.5	28800	3.68	8.3	16900	2.46
903436	25HPA530A30	CNPH*3017A**	58CV(A,X)090–16	28800	13.0	15.5	28800	3.70	8.3	16800	2.48
903665	25HPA530A30	CNPH*3017A**	58CV(A,X)110–20	29000	13.0	15.5	28800	3.72	8.3	16800	2.48
903324	25HPA530A30	CNPH*3017A**	58CV(A,X)135–22	29000	13.0	15.5	28800	3.72	8.4	16800	2.48
905272	25HPA530A30	CNPH*3017A**	58CV(A,X)155–22	29000	13.0	15.5	28800	3.72	8.4	16800	2.50
3107016	25HPA530A30	CNPH*3017A**	58MEB040–12	29200	13.0	15.5	29000	3.80	8.4	16900	2.52
3107017	25HPA530A30	CNPH*3017A**	58MEB060–12	29200	13.0	15.5	29200	3.80	8.4	17000	2.52
3107018	25HPA530A30	CNPH*3017A**	58MEB080–12	29200	13.0	15.5	29000	3.78	8.4	16900	2.50
3107019	25HPA530A30	CNPH*3017A**	58MEB080–16	29400	13.0	15.5	29200	3.82	8.4	17100	2.52
1391620	25HPA530A30	CNPH*3017A**	58MV(B,C)060–14	28800	13.0	15.5	28800	3.68	8.3	16800	2.46
1393042	25HPA530A30	CNPH*3017A**	58MV(B,C)080–14	28800	12.5	15.5	28800	3.68	8.3	16900	2.46
1394471	25HPA530A30	CNPH*3017A**	58MV(B,C)080–20	28800	13.0	15.5	28800	3.68	8.3	16800	2.46
1396207	25HPA530A30	CNPH*3017A**	58MV(B,C)100–20	28800	13.0	15.5	28800	3.70	8.3	16800	2.48
1397944	25HPA530A30	CNPH*3017A**	58MV(B,C)120–20	28800	13.0	15.5	28800	3.68	8.3	16700	2.46
906371	25HPA530A30	CNPH*3017A**	58MVB040–14	28800	12.5	15.0	28800	3.68	8.3	16800	2.46
3015948	25HPA530A30	CNPH*3017A**	58PH*070–16	29000	12.5	15.3	29200	3.72	8.2	17100	2.46
3015949	25HPA530A30	CNPH*3017A**	58PH*090–16	29000	13.0	15.5	29000	3.74	8.3	17000	2.48
905993	25HPA530A30	CNPH*3017A**+TDR		29000	12.0	14.0	30000	3.66	8.2	17800	2.40
904304	25HPA530A30	CNPH*3617A**	58CV(A,X)070–12	28800	12.5	15.5	28800	3.68	8.3	16900	2.46

See notes on page 22

COMBINATION RATINGS CONTINUED

ARI Ref. No.	Model Number	Coil Model Number	Furnace Model Number	Cooling Capacity	EER	SEER	High Temp		HSPF	Low Temp	
							E Capacity	E COP		H Capacity	H COP
905415	25HPA530A30	CNPH*3617A**	58CV(A,X)090–16	28800	13.0	15.5	28800	3.70	8.3	16800	2.48
904634	25HPA530A30	CNPH*3617A**	58CV(A,X)110–20	29000	13.0	15.5	28800	3.72	8.3	16800	2.48
905969	25HPA530A30	CNPH*3617A**	58CV(A,X)135–22	29000	13.0	15.5	28800	3.72	8.4	16800	2.48
905810	25HPA530A30	CNPH*3617A**	58CV(A,X)155–22	29000	13.0	15.5	28800	3.72	8.4	16800	2.50
3107020	25HPA530A30	CNPH*3617A**	58MEB040–12	29200	13.0	15.5	29000	3.80	8.4	16900	2.52
3107021	25HPA530A30	CNPH*3617A**	58MEB060–12	29200	13.0	15.5	29200	3.80	8.4	17000	2.52
3107022	25HPA530A30	CNPH*3617A**	58MEB080–12	29200	13.0	15.5	29000	3.78	8.4	16900	2.50
3107023	25HPA530A30	CNPH*3617A**	58MEB080–16	29400	13.0	15.5	29200	3.82	8.4	17100	2.52
1391657	25HPA530A30	CNPH*3617A**	58MV(B,C)060–14	28800	13.0	15.5	28800	3.68	8.3	16800	2.46
1393079	25HPA530A30	CNPH*3617A**	58MV(B,C)080–14	28800	12.5	15.5	28800	3.68	8.3	16900	2.46
1394508	25HPA530A30	CNPH*3617A**	58MV(B,C)080–20	28800	13.0	15.5	28800	3.68	8.3	16800	2.46
1396244	25HPA530A30	CNPH*3617A**	58MV(B,C)100–20	28800	13.0	15.5	28800	3.70	8.3	16800	2.48
1397981	25HPA530A30	CNPH*3617A**	58MV(B,C)120–20	28800	13.0	15.5	28800	3.68	8.3	16700	2.46
903128	25HPA530A30	CNPH*3617A**	58MVB040–14	28800	12.5	15.0	28800	3.68	8.3	16800	2.46
3015950	25HPA530A30	CNPH*3617A**	58PH*070–16	29000	12.5	15.3	29200	3.72	8.2	17100	2.46
3015951	25HPA530A30	CNPH*3617A**	58PH*090–16	29000	13.0	15.5	29000	3.74	8.3	17000	2.48
903345	25HPA530A30	CNPH*3617A**+TDR		29000	12.0	14.0	30000	3.66	8.2	17800	2.40
904323	25HPA530A30	CNPV*3014A**	58CV(A,X)070–12	28800	12.5	15.0	28800	3.66	8.2	16900	2.44
902969	25HPA530A30	CNPV*3014A**+TDR		29000	12.0	14.0	30000	3.66	8.2	17800	2.40
905648	25HPA530A30	CNPV*3017A**	58CV(A,X)090–16	28800	13.0	15.5	28800	3.70	8.3	16800	2.48
3107008	25HPA530A30	CNPV*3017A**	58MEB040–12	29200	13.0	15.5	29000	3.80	8.4	16900	2.52
3107009	25HPA530A30	CNPV*3017A**	58MEB060–12	29200	13.0	15.5	29200	3.80	8.4	17000	2.52
3107010	25HPA530A30	CNPV*3017A**	58MEB080–12	29200	13.0	15.5	29000	3.78	8.4	16900	2.50
3107011	25HPA530A30	CNPV*3017A**	58MEB080–16	29400	13.0	15.5	29200	3.82	8.4	17100	2.52
1391791	25HPA530A30	CNPV*3017A**	58MV(B,C)060–14	28800	13.0	15.5	28800	3.68	8.3	16800	2.46
3015945	25HPA530A30	CNPV*3017A**	58PH*070–16	29000	12.5	15.5	29200	3.72	8.2	17100	2.46
1116761	25HPA530A30	CNPV*3017A**	58UVB060–14	28800	13.0	15.5	28800	3.68	8.3	16800	2.46
903646	25HPA530A30	CNPV*3017A**+TDR		29000	12.0	14.0	30000	3.66	8.2	17800	2.40
904883	25HPA530A30	CNPV*3617A**	58CV(A,X)090–16	28800	13.0	15.5	28800	3.70	8.3	16800	2.48
3107012	25HPA530A30	CNPV*3617A**	58MEB040–12	29200	13.0	15.5	29000	3.80	8.4	16900	2.52
3107013	25HPA530A30	CNPV*3617A**	58MEB060–12	29200	13.0	15.5	29200	3.80	8.4	17000	2.52
3107014	25HPA530A30	CNPV*3617A**	58MEB080–12	29200	13.0	15.5	29000	3.78	8.4	16900	2.50
3107015	25HPA530A30	CNPV*3617A**	58MEB080–16	29400	13.0	15.5	29200	3.82	8.4	17100	2.52
1391828	25HPA530A30	CNPV*3617A**	58MV(B,C)060–14	28800	13.0	15.5	28800	3.68	8.3	16800	2.46
3015946	25HPA530A30	CNPV*3617A**	58PH*070–16	29000	12.5	15.5	29200	3.72	8.2	17100	2.46
1116764	25HPA530A30	CNPV*3617A**	58UVB060–14	28800	13.0	15.5	28800	3.68	8.3	16800	2.46
903989	25HPA530A30	CNPV*3617A**+TDR		29000	12.0	14.0	30000	3.66	8.2	17800	2.40
903187	25HPA530A30	CNPV*3621A**	58CV(A,X)110–20	29000	13.0	15.5	28800	3.72	8.3	16800	2.48
1393182	25HPA530A30	CNPV*3621A**	58MV(B,C)080–14	28800	12.5	15.5	28800	3.68	8.3	16900	2.46
1394653	25HPA530A30	CNPV*3621A**	58MV(B,C)080–20	28800	13.0	15.5	28800	3.68	8.3	16800	2.46
1396389	25HPA530A30	CNPV*3621A**	58MV(B,C)100–20	28800	13.0	15.5	28800	3.70	8.3	16800	2.48
3015947	25HPA530A30	CNPV*3621A**	58PH*090–16	29000	13.0	15.8	29000	3.74	8.3	17000	2.50
1116767	25HPA530A30	CNPV*3621A**	58UVB080–14	28800	12.5	15.5	28800	3.68	8.3	16900	2.46
1116770	25HPA530A30	CNPV*3621A**	58UVB080–20	28800	13.0	15.5	28800	3.68	8.3	16800	2.46
1116773	25HPA530A30	CNPV*3621A**	58UVB100–20	28800	13.0	15.5	28800	3.70	8.3	16800	2.48
3006301	25HPA530A30	CNPV*3621A**		28000	12.5	15.0	27800	3.80	8.3	16900	2.62
903869	25HPA530A30	CNPV*3621A**+TDR		29000	12.0	14.0	30000	3.66	8.2	17800	2.40
906016	25HPA530A30	CSPH*3012A**	58CV(A,X)070–12	28800	12.9	15.5	28800	3.68	8.3	16900	2.46
905405	25HPA530A30	CSPH*3012A**	58CV(A,X)090–16	28800	13.0	15.5	28800	3.70	8.3	16800	2.48
906108	25HPA530A30	CSPH*3012A**	58CV(A,X)110–20	29000	13.0	15.5	28800	3.72	8.4	16900	2.48
906332	25HPA530A30	CSPH*3012A**	58CV(A,X)135–22	29000	13.0	15.5	28800	3.72	8.3	16800	2.48
905527	25HPA530A30	CSPH*3012A**	58CV(A,X)155–22	29000	13.0	15.5	28800	3.74	8.4	16800	2.50
3107024	25HPA530A30	CSPH*3012A**	58MEB040–12	29200	13.0	15.5	29000	3.78	8.4	16900	2.50
3107025	25HPA530A30	CSPH*3012A**	58MEB060–12	29200	13.0	15.5	29200	3.78	8.4	17000	2.50
3107026	25HPA530A30	CSPH*3012A**	58MEB080–12	29200	13.0	15.5	29000	3.76	8.3	16900	2.50
3107027	25HPA530A30	CSPH*3012A**	58MEB080–16	29400	13.0	15.5	29200	3.80	8.4	17100	2.52
1391987	25HPA530A30	CSPH*3012A**	58MV(B,C)060–14	28800	12.5	15.5	28800	3.68	8.3	16900	2.46
1393410	25HPA530A30	CSPH*3012A**	58MV(B,C)080–14	28800	12.5	15.5	28800	3.68	8.3	16900	2.46
1394907	25HPA530A30	CSPH*3012A**	58MV(B,C)080–20	28800	13.0	15.5	28800	3.70	8.3	16900	2.46
1396643	25HPA530A30	CSPH*3012A**	58MV(B,C)100–20	28800	13.0	15.5	28800	3.70	8.3	16900	2.48
1398297	25HPA530A30	CSPH*3012A**	58MV(B,C)120–20	28800	13.0	15.5	28800	3.68	8.3	16800	2.46
905726	25HPA530A30	CSPH*3012A**	58MVB040–14	28800	12.5	15.0	28800	3.68	8.3	16900	2.46
3015952	25HPA530A30	CSPH*3012A**	58PH*070–16	29000	12.5	15.3	29200	3.70	8.2	17100	2.46
3015953	25HPA530A30	CSPH*3012A**	58PH*090–16	29000	13.0	15.5	29000	3.72	8.3	16900	2.48
903696	25HPA530A30	CSPH*3012A**+TDR		29000	12.0	14.0	30000	3.68	8.2	17800	2.42
903554	25HPA530A30	CSPH*3612A**	58CV(A,X)070–12	28800	13.0	15.5	28800	3.80	8.4	17000	2.52
906114	25HPA530A30	CSPH*3612A**	58CV(A,X)090–16	28800	13.0	15.5	28800	3.82	8.4	16900	2.54
904471	25HPA530A30	CSPH*3612A**	58CV(A,X)110–20	29000	13.0	15.5	28800	3.84	8.4	16900	2.54
904758	25HPA530A30	CSPH*3612A**	58CV(A,X)135–22	29000	13.0	15.5	28800	3.84	8.4	16900	2.54
906122	25HPA530A30	CSPH*3612A**	58CV(A,X)155–22	29000	13.0	15.5	28800	3.86	8.4	16900	2.54
3107028	25HPA530A30	CSPH*3612A**	58MEB040–12	29800	13.0	16.0	29400	3.94	8.7	17100	2.58
3107029	25HPA530A30	CSPH*3612A**	58MEB060–12	30000	13.0	16.0	29400	3.96	8.7	17100	2.58
3107030	25HPA530A30	CSPH*3612A**	58MEB080–12	29800	13.0	16.0	29400	3.92	8.6	17000	2.56
3107031	25HPA530A30	CSPH*3612A**	58MEB080–16	30000	13.0	16.0	29600	3.98	8.7	17200	2.58
1392024	25HPA530A30	CSPH*3612A**	58MV(B,C)060–14	28800	13.0	15.5	28800	3.80	8.4	16900	2.52
1393447	25HPA530A30	CSPH*3612A**	58MV(B,C)080–14	28800	13.0	15.5	28800	3.80	8.3	17000	2.52
1394938	25HPA530A30	CSPH*3612A**	58MV(B,C)080–20	28800	13.0	15.5	28800	3.80	8.4	17000	2.52
1396680	25HPA530A30	CSPH*3612A**	58MV(B,C)100–20	29000	13.0	15.5	28800	3.82	8.4	16900	2.52

See notes on page 22

COMBINATION RATINGS CONTINUED

ARI Ref. No.	Model Number	Coil Model Number	Furnace Model Number	Cooling Capacity	EER	SEER	High Temp		HSPF	Low Temp	
							E Capacity	E COP		H Capacity	H COP
1398334	25HPA530A30	CSPH*3612A**	58MV(B,C)120–20	29000	13.0	15.5	28800	3.80	8.4	16900	2.52
904079	25HPA530A30	CSPH*3612A**	58MVB040–14	28800	12.5	15.0	28800	3.80	8.3	17000	2.50
3015954	25HPA530A30	CSPH*3612A**	58PH*070–16	29600	13.0	15.8	29400	3.84	8.5	17200	2.52
3015955	25HPA530A30	CSPH*3612A**	58PH*090–16	29800	13.0	15.8	29400	3.90	8.5	17100	2.54
903523	25HPA530A30	CSPH*3612A**+TDR		29000	12.0	14.0	30000	3.78	8.3	17900	2.46
905622	25HPA536A30	†FX4CN(B,F)042		36000	12.5	15.5	34000	3.74	8.4	19800	2.46
1258726	25HPA536A30	FE4AN(B,F)003+UI		34800	12.5	15.5	33000	3.58	7.8	19200	2.42
1258732	25HPA536A30	FE4AN(B,F)005+UI		36000	13.0	16.0	33400	3.80	8.2	19400	2.52
1258723	25HPA536A30	FE4ANB006+UI		36000	13.0	16.0	33600	3.90	8.4	19400	2.56
1258729	25HPA536A30	FE4ANF002+UI		34600	12.5	15.0	33200	3.56	7.8	19400	2.38
904386	25HPA536A30	FE5ANB004		36000	13.0	16.0	33600	3.92	8.4	19400	2.56
1258735	25HPA536A30	FE5ANB004+UI		36000	13.0	16.0	33600	3.92	8.4	19400	2.56
904165	25HPA536A30	FF1ENP036		34600	11.2	13.5	34200	3.44	7.7	20200	2.30
3017919	25HPA536A30	FV4BN(B,F)003		34800	12.5	15.0	33000	3.58	7.8	19200	2.42
3017920	25HPA536A30	FV4BN(B,F)005		36000	13.0	16.0	33400	3.80	8.2	19400	2.52
906535	25HPA536A30	FV4BNB006		36000	13.0	16.0	33600	3.90	8.4	19400	2.56
905260	25HPA536A30	FV4BNF002		34600	12.5	15.0	33200	3.56	7.8	19400	2.38
904151	25HPA536A30	FX4CN(B,F)036		35200	12.5	15.0	33600	3.64	8.0	19700	2.42
906056	25HPA536A30	FY4ANF036		34600	11.2	13.5	34400	3.46	7.7	20400	2.30
904187	25HPA536A30	FY4ANF042		35000	11.5	14.0	34600	3.56	8.0	20400	2.34
906555	25HPA536A30	CAP**3614A**	58CV(A,X)070–12	33400	12.0	14.5	33200	3.46	7.7	19400	2.36
3015956	25HPA536A30	CAP**3614A**	58PH*045–08	34200	11.5	14.0	33600	3.42	7.7	19800	2.32
906565	25HPA536A30	CAP**3614A**+TDR		33600	11.5	14.0	33200	3.44	7.7	20000	2.30
904983	25HPA536A30	CAP**3617A**	58CV(A,X)090–16	34600	12.5	15.0	33000	3.52	7.7	19200	2.38
3107036	25HPA536A30	CAP**3617A**	58MEB040–12	34800	12.5	15.0	33000	3.56	7.7	19400	2.40
3107037	25HPA536A30	CAP**3617A**	58MEB060–12	34800	12.5	15.0	33000	3.56	7.7	19500	2.40
3107038	25HPA536A30	CAP**3617A**	58MEB080–12	34600	12.5	15.0	33000	3.56	7.7	19400	2.40
3107039	25HPA536A30	CAP**3617A**	58MEB080–16	34800	12.5	15.0	33000	3.56	7.7	19500	2.40
1391447	25HPA536A30	CAP**3617A**	58MV(B,C)060–14	34400	12.5	15.0	33000	3.50	7.7	19300	2.38
3015957	25HPA536A30	CAP**3617A**	58PH*070–16	34400	12.0	14.5	33400	3.50	7.7	19600	2.36
1116776	25HPA536A30	CAP**3617A**	58UVB060–14	34400	12.5	15.0	33000	3.50	7.7	19300	2.38
905156	25HPA536A30	CAP**3617A**+TDR		34600	11.5	14.0	34200	3.48	7.7	20200	2.32
903429	25HPA536A30	CAP**3621A**	58CV(A,X)110–20	34600	12.5	15.0	33000	3.54	7.8	19200	2.40
3107040	25HPA536A30	CAP**3621A**	58MEB100–20	34800	12.5	15.0	32800	3.58	7.7	19200	2.42
1392937	25HPA536A30	CAP**3621A**	58MV(B,C)080–14	34400	12.0	14.5	33000	3.48	7.7	19300	2.36
1394381	25HPA536A30	CAP**3621A**	58MV(B,C)080–20	34400	12.5	15.0	33000	3.50	7.7	19300	2.38
1396117	25HPA536A30	CAP**3621A**	58MV(B,C)100–20	34600	12.5	15.0	33000	3.52	7.7	19200	2.38
3015958	25HPA536A30	CAP**3621A**	58PH*090–16	35000	12.5	15.0	33200	3.60	7.8	19400	2.42
3015959	25HPA536A30	CAP**3621A**	58PH*110–20	35000	12.5	15.0	33200	3.64	7.8	19400	2.44
1116779	25HPA536A30	CAP**3621A**	58UVB080–14	34400	12.0	14.5	33000	3.48	7.7	19300	2.36
1116782	25HPA536A30	CAP**3621A**	58UVB080–20	34400	12.5	15.0	33000	3.50	7.7	19300	2.38
1116785	25HPA536A30	CAP**3621A**	58UVB100–20	34600	12.5	15.0	33000	3.52	7.7	19200	2.38
903281	25HPA536A30	CAP**3621A**+TDR		34600	11.5	14.0	34200	3.48	7.7	20200	2.32
904942	25HPA536A30	CAP**4221A**	58CV(A,X)110–20	34800	12.5	15.0	33000	3.58	7.8	19300	2.42
3107041	25HPA536A30	CAP**4221A**	58MEB100–20	35000	12.5	15.5	32800	3.64	7.7	19200	2.44
1392898	25HPA536A30	CAP**4221A**	58MV(B,C)080–14	34600	12.5	15.0	33200	3.52	7.7	19400	2.38
1394339	25HPA536A30	CAP**4221A**	58MV(B,C)080–20	34800	12.5	15.0	33200	3.54	7.8	19300	2.40
1396078	25HPA536A30	CAP**4221A**	58MV(B,C)100–20	34800	12.5	15.0	33200	3.56	7.8	19300	2.40
3015960	25HPA536A30	CAP**4221A**	58PH*090–16	35200	12.5	15.0	33400	3.66	7.8	19400	2.44
3015961	25HPA536A30	CAP**4221A**	58PH*110–20	35200	12.5	15.0	33400	3.68	8.0	19400	2.46
1116788	25HPA536A30	CAP**4221A**	58UVB080–14	34600	12.5	15.0	33200	3.52	7.7	19400	2.38
1116791	25HPA536A30	CAP**4221A**	58UVB080–20	34800	12.5	15.0	33200	3.54	7.8	19300	2.40
1116794	25HPA536A30	CAP**4221A**	58UVB100–20	34800	12.5	15.0	33200	3.56	7.8	19300	2.40
905495	25HPA536A30	CAP**4221A**+TDR		35000	11.5	14.0	34400	3.52	7.7	20400	2.34
903772	25HPA536A30	CAP**4224A**	58CV(A,X)135–22	34800	12.5	15.5	33000	3.60	7.9	19200	2.42
903995	25HPA536A30	CAP**4224A**	58CV(A,X)155–22	35000	13.0	15.5	33000	3.62	7.9	19100	2.44
1397855	25HPA536A30	CAP**4224A**	58MV(B,C)120–20	34800	12.5	15.0	33000	3.56	7.8	19200	2.40
1116800	25HPA536A30	CAP**4224A**	58UVB120–20	34800	12.5	15.0	33000	3.56	7.8	19200	2.40
905784	25HPA536A30	CAP**4224A**+TDR		35000	11.5	14.0	34400	3.52	7.7	20400	2.34
904166	25HPA536A30	CNPF*3618A**+TDR		34600	11.2	13.5	34200	3.46	7.7	20200	2.32
903475	25HPA536A30	CNPH*3617A**	58CV(A,X)070–12	34200	12.0	14.5	33000	3.46	7.7	19400	2.34
906517	25HPA536A30	CNPH*3617A**	58CV(A,X)090–16	34400	12.5	15.0	33000	3.50	7.7	19200	2.38
903713	25HPA536A30	CNPH*3617A**	58CV(A,X)110–20	34400	12.5	15.0	33000	3.50	7.7	19300	2.38
905288	25HPA536A30	CNPH*3617A**	58CV(A,X)135–22	34400	12.5	15.0	33000	3.50	7.7	19200	2.38
903945	25HPA536A30	CNPH*3617A**	58CV(A,X)155–22	34600	12.5	15.0	33000	3.52	7.7	19200	2.40
3107052	25HPA536A30	CNPH*3617A**	58MEB040–12	34600	12.5	15.0	33000	3.52	7.7	19300	2.38
3107053	25HPA536A30	CNPH*3617A**	58MEB060–12	34600	12.0	15.0	33000	3.52	7.7	19400	2.38
3107054	25HPA536A30	CNPH*3617A**	58MEB080–12	34600	12.0	15.0	32800	3.52	7.7	19300	2.38
3107055	25HPA536A30	CNPH*3617A**	58MEB080–16	34600	12.0	15.0	33000	3.52	7.7	19400	2.38
3107056	25HPA536A30	CNPH*3617A**	58MEB100–20	34400	12.5	15.0	32600	3.50	7.7	19100	2.38
1391660	25HPA536A30	CNPH*3617A**	58MV(B,C)060–14	34400	12.0	15.0	33000	3.46	7.7	19300	2.36
1393082	25HPA536A30	CNPH*3617A**	58MV(B,C)080–14	34200	12.0	14.5	33000	3.42	7.7	19400	2.34
1394511	25HPA536A30	CNPH*3617A**	58MV(B,C)080–20	34400	12.0	15.0	33000	3.46	7.7	19300	2.36
1396247	25HPA536A30	CNPH*3617A**	58MV(B,C)100–20	34400	12.0	15.0	33000	3.48	7.7	19300	2.36
1397984	25HPA536A30	CNPH*3617A**	58MV(B,C)120–20	34400	12.5	15.0	33000	3.48	7.7	19200	2.36
3015967	25HPA536A30	CNPH*3617A**	58PH*045–08	34200	11.5	14.0	33600	3.42	7.7	19800	2.32
3015968	25HPA536A30	CNPH*3617A**	58PH*070–16	34400	12.0	14.5	33200	3.46	7.7	19500	2.34
3015969	25HPA536A30	CNPH*3617A**	58PH*090–16	34600	12.5	15.0	33000	3.52	7.7	19300	2.40

See notes on page 22

COMBINATION RATINGS CONTINUED

ARI Ref. No.	Model Number	Coil Model Number	Furnace Model Number	Cooling Capacity	EER	SEER	High Temp		HSPF	Low Temp	
							E Capacity	E COP		H Capacity	H COP
3015970	25HPA536A30	CNPH*3617A**	58PH*110–20	34600	12.5	15.0	33000	3.56	7.7	19300	2.40
903904	25HPA536A30	CNPH*3617A**+TDR		34600	11.5	14.0	34200	3.46	7.7	20200	2.32
904421	25HPA536A30	CNPH*4221A**	58CV(A,X)070–12	34600	12.5	15.0	33200	3.58	7.8	19300	2.40
903419	25HPA536A30	CNPH*4221A**	58CV(A,X)090–16	34800	13.0	15.5	33000	3.62	7.8	19100	2.44
903158	25HPA536A30	CNPH*4221A**	58CV(A,X)110–20	34800	13.0	15.5	33000	3.64	7.8	19200	2.44
905709	25HPA536A30	CNPH*4221A**	58CV(A,X)135–22	34800	13.0	15.5	32800	3.64	8.0	19100	2.46
905409	25HPA536A30	CNPH*4221A**	58CV(A,X)155–22	34800	13.0	15.5	32800	3.66	7.9	19000	2.46
3107057	25HPA536A30	CNPH*4221A**	58MEB040–12	35000	12.5	15.3	33200	3.62	7.8	19500	2.44
3107058	25HPA536A30	CNPH*4221A**	58MEB060–12	35200	12.5	15.3	33200	3.62	7.8	19500	2.42
3107059	25HPA536A30	CNPH*4221A**	58MEB080–12	35000	12.5	15.3	33200	3.62	7.8	19400	2.42
3107060	25HPA536A30	CNPH*4221A**	58MEB080–16	35000	12.5	15.3	33200	3.62	7.8	19500	2.42
3107061	25HPA536A30	CNPH*4221A**	58MEB100–20	35000	12.5	15.3	32800	3.60	7.8	19200	2.44
1391699	25HPA536A30	CNPH*4221A**	58MV(B,C)060–14	34800	12.5	15.0	33000	3.60	7.8	19200	2.42
1393121	25HPA536A30	CNPH*4221A**	58MV(B,C)080–14	34800	12.5	15.0	33000	3.56	7.7	19300	2.40
1394550	25HPA536A30	CNPH*4221A**	58MV(B,C)080–20	34800	12.5	15.0	33000	3.58	7.8	19300	2.42
1396286	25HPA536A30	CNPH*4221A**	58MV(B,C)100–20	34800	12.5	15.0	33000	3.60	7.8	19200	2.42
1398023	25HPA536A30	CNPH*4221A**	58MV(B,C)120–20	34800	12.5	15.0	33000	3.60	7.8	19100	2.44
3015971	25HPA536A30	CNPH*4221A**	58PH*045–08	34600	11.5	14.0	33800	3.50	7.7	19900	2.36
3015972	25HPA536A30	CNPH*4221A**	58PH*070–16	34800	12.0	14.5	33000	3.54	7.7	19600	2.38
3015973	25HPA536A30	CNPH*4221A**	58PH*090–16	35000	12.5	15.0	33200	3.62	7.8	19400	2.44
3015974	25HPA536A30	CNPH*4221A**	58PH*110–20	35200	12.5	15.0	33400	3.66	7.8	19400	2.44
903907	25HPA536A30	CNPH*4221A**+TDR		35000	11.5	14.0	34400	3.54	7.7	20400	2.34
905545	25HPA536A30	CNPV*3617A**	58CV(A,X)090–16	34400	12.5	15.0	33000	3.50	7.7	19200	2.38
3107042	25HPA536A30	CNPV*3617A**	58MEB040–12	34600	12.5	15.0	33000	3.52	7.7	19300	2.38
3107043	25HPA536A30	CNPV*3617A**	58MEB060–12	34600	12.0	15.0	33000	3.52	7.7	19400	2.38
3107044	25HPA536A30	CNPV*3617A**	58MEB080–12	34600	12.5	15.0	32800	3.52	7.7	19300	2.38
3107045	25HPA536A30	CNPV*3617A**	58MEB080–16	34600	12.0	15.0	33000	3.52	7.7	19400	2.38
1391831	25HPA536A30	CNPV*3617A**	58MV(B,C)060–14	34400	12.0	15.0	33000	3.46	7.7	19300	2.36
3015962	25HPA536A30	CNPV*3617A**	58PH*070–16	34400	12.0	14.5	33200	3.46	7.7	19500	2.34
1116803	25HPA536A30	CNPV*3617A**	58UVB060–14	34400	12.0	15.0	33000	3.46	7.7	19300	2.36
904134	25HPA536A30	CNPV*3617A**+TDR		34600	11.5	14.0	34200	3.46	7.7	20200	2.32
904053	25HPA536A30	CNPV*3621A**	58CV(A,X)110–20	34400	12.5	15.0	33000	3.50	7.7	19300	2.38
3107046	25HPA536A30	CNPV*3621A**	58MEB100–20	34400	12.5	15.0	32600	3.52	7.7	19100	2.40
1393185	25HPA536A30	CNPV*3621A**	58MV(B,C)080–14	34200	12.0	14.5	33000	3.44	7.7	19400	2.34
1394656	25HPA536A30	CNPV*3621A**	58MV(B,C)080–20	34400	12.0	14.5	33000	3.48	7.7	19300	2.36
1396392	25HPA536A30	CNPV*3621A**	58MV(B,C)100–20	34400	12.5	15.0	33000	3.48	7.7	19300	2.36
3015963	25HPA536A30	CNPV*3621A**	58PH*090–16	34600	12.5	15.0	33000	3.54	7.7	19300	2.40
3015964	25HPA536A30	CNPV*3621A**	58PH*110–20	34800	12.5	15.0	33000	3.56	7.7	19300	2.40
1116806	25HPA536A30	CNPV*3621A**	58UVB080–14	34200	12.0	14.5	33000	3.44	7.7	19400	2.34
1116809	25HPA536A30	CNPV*3621A**	58UVB080–20	34400	12.0	14.5	33000	3.48	7.7	19300	2.36
1116812	25HPA536A30	CNPV*3621A**	58UVB100–20	34400	12.5	15.0	33000	3.48	7.7	19300	2.36
903655	25HPA536A30	CNPV*3621A**+TDR		34600	11.5	14.0	34200	3.46	7.7	20200	2.32
3107034	25HPA536A30	CNPV*4217A**	58CV(A,X)090–16	35000	12.5	15.0	33200	3.62	7.8	19400	2.44
3107047	25HPA536A30	CNPV*4217A**	58MEB040–12	35400	12.5	15.3	33000	3.68	7.8	19500	2.44
3107048	25HPA536A30	CNPV*4217A**	58MEB060–12	35400	12.5	15.3	33400	3.68	7.8	19600	2.44
3107049	25HPA536A30	CNPV*4217A**	58MEB080–12	35200	12.5	15.3	33000	3.66	7.8	19500	2.44
3107050	25HPA536A30	CNPV*4217A**	58MEB080–16	35400	12.5	15.3	33000	3.68	7.8	19600	2.44
3107033	25HPA536A30	CNPV*4217A**	58MV(B,C)060–14	35200	12.5	15.0	33600	3.66	7.9	19600	2.44
3107035	25HPA536A30	CNPV*4217A**	58PH*070–16	35000	12.0	15.0	33600	3.60	7.8	19700	2.40
3107032	25HPA536A30	CNPV*4217A**+TDR		35400	11.5	14.0	34600	3.60	7.8	20400	2.36
905787	25HPA536A30	CNPV*4221A**	58CV(A,X)110–20	34800	12.5	15.0	33000	3.64	7.8	19200	2.44
3107051	25HPA536A30	CNPV*4221A**	58MEB100–20	35000	12.5	15.3	32800	3.60	7.7	19200	2.44
1393224	25HPA536A30	CNPV*4221A**	58MV(B,C)080–14	34600	12.5	15.0	33000	3.56	7.7	19300	2.40
1394695	25HPA536A30	CNPV*4221A**	58MV(B,C)080–20	34800	12.5	15.0	33000	3.58	7.8	19300	2.42
1396431	25HPA536A30	CNPV*4221A**	58MV(B,C)100–20	34800	12.5	15.0	33000	3.60	7.8	19200	2.42
3015965	25HPA536A30	CNPV*4221A**	58PH*090–16	35000	12.5	15.0	33200	3.62	7.8	19400	2.44
3015966	25HPA536A30	CNPV*4221A**	58PH*110–20	35200	12.5	15.0	33400	3.66	7.8	19400	2.44
1116815	25HPA536A30	CNPV*4221A**	58UVB080–14	34600	12.5	15.0	33000	3.56	7.7	19300	2.40
1116818	25HPA536A30	CNPV*4221A**	58UVB080–20	34800	12.5	15.0	33000	3.58	7.8	19300	2.42
1116821	25HPA536A30	CNPV*4221A**	58UVB100–20	34800	12.5	15.0	33000	3.60	7.8	19200	2.42
904861	25HPA536A30	CNPV*4221A**+TDR		35000	11.5	14.0	34400	3.54	7.7	20400	2.34
903864	25HPA536A30	CSPH*3612A**	58CV(A,X)070–12	34600	12.5	15.0	33000	3.60	7.8	19500	2.40
906203	25HPA536A30	CSPH*3612A**	58CV(A,X)090–16	34600	12.5	15.0	33000	3.64	7.8	19400	2.44
906186	25HPA536A30	CSPH*3612A**	58CV(A,X)110–20	34600	12.5	15.0	33000	3.66	7.8	19400	2.44
905660	25HPA536A30	CSPH*3612A**	58CV(A,X)135–22	34600	12.5	15.0	33000	3.66	7.9	19300	2.44
906296	25HPA536A30	CSPH*3612A**	58CV(A,X)155–22	34600	12.5	15.0	33000	3.68	8.0	19300	2.46
3107062	25HPA536A30	CSPH*3612A**	58MEB040–12	35600	12.5	15.0	33400	3.70	7.8	19500	2.46
3107063	25HPA536A30	CSPH*3612A**	58MEB060–12	35600	12.5	15.0	33400	3.70	7.8	19600	2.46
3107064	25HPA536A30	CSPH*3612A**	58MEB080–12	35400	12.5	15.0	33400	3.68	7.8	19500	2.46
3107065	25HPA536A30	CSPH*3612A**	58MEB080–16	35600	12.5	15.0	33400	3.70	7.8	19600	2.46
3107066	25HPA536A30	CSPH*3612A**	58MEB100–20	35400	12.5	15.5	33000	3.68	7.8	19300	2.46
1392027	25HPA536A30	CSPH*3612A**	58MV(B,C)060–14	34400	12.5	15.0	33000	3.62	7.7	19400	2.42
1393450	25HPA536A30	CSPH*3612A**	58MV(B,C)080–14	34400	12.5	15.0	33000	3.58	7.7	19500	2.40
1394941	25HPA536A30	CSPH*3612A**	58MV(B,C)080–20	34400	12.5	15.0	33000	3.62	7.7	19400	2.42
1396683	25HPA536A30	CSPH*3612A**	58MV(B,C)100–20	34600	12.5	15.0	33000	3.62	7.8	19400	2.42
1398337	25HPA536A30	CSPH*3612A**	58MV(B,C)120–20	34600	12.5	15.0	33000	3.62	7.8	19400	2.42
3015975	25HPA536A30	CSPH*3612A**	58PH*045–08	35200	12.0	14.5	34000	3.58	7.7	20000	2.38
3015976	25HPA536A30	CSPH*3612A**	58PH*070–16	35200	12.0	15.0	33600	3.62	7.8	19700	2.40
3015977	25HPA536A30	CSPH*3612A**	58PH*090–16	35600	12.5	15.0	33400	3.70	8.0	19500	2.46

See notes on page 22

COMBINATION RATINGS CONTINUED

ARI Ref. No.	Model Number	Coil Model Number	Furnace Model Number	Cooling Capacity	EER	SEER	High Temp		HSPF	Low Temp	
							E Capacity	E COP		H Capacity	H COP
3015978	25HPA536A30	CSPH*3612A**	58PH*110–20	35600	12.5	15.0	33600	3.74	8.0	19500	2.48
903075	25HPA536A30	CSPH*3612A**+TDR		34600	11.5	14.0	34200	3.60	7.7	20400	2.38
903753	25HPA536A30	CSPH*4212A**	58CV(A,X)070–12	34800	12.5	15.0	33200	3.64	7.8	19500	2.42
904450	25HPA536A30	CSPH*4212A**	58CV(A,X)090–16	34800	12.5	15.0	33200	3.68	7.8	19400	2.46
905231	25HPA536A30	CSPH*4212A**	58CV(A,X)110–20	34800	12.5	15.0	33200	3.70	7.8	19400	2.46
905121	25HPA536A30	CSPH*4212A**	58CV(A,X)135–22	34800	12.5	15.0	33200	3.70	7.8	19400	2.46
905174	25HPA536A30	CSPH*4212A**	58CV(A,X)155–22	35000	13.0	15.5	33200	3.72	7.8	19300	2.48
3107067	25HPA536A30	CSPH*4212A**	58MEB040–12	35800	12.5	15.5	33400	3.74	8.0	19600	2.48
3107068	25HPA536A30	CSPH*4212A**	58MEB060–12	35800	12.5	15.5	33600	3.76	8.0	19700	2.48
3107069	25HPA536A30	CSPH*4212A**	58MEB080–12	35800	12.5	15.5	33400	3.74	8.0	19600	2.48
3107070	25HPA536A30	CSPH*4212A**	58MEB080–16	35800	12.5	15.5	33600	3.74	8.0	19700	2.48
3107071	25HPA536A30	CSPH*4212A**	58MEB100–20	35600	12.5	15.5	33200	3.74	8.0	19400	2.48
1392066	25HPA536A30	CSPH*4212A**	58MV(B,C)060–14	34600	12.5	15.0	33200	3.66	7.8	19400	2.44
1393489	25HPA536A30	CSPH*4212A**	58MV(B,C)080–14	34600	12.5	15.0	33200	3.62	7.8	19500	2.42
1394980	25HPA536A30	CSPH*4212A**	58MV(B,C)080–20	34800	12.5	15.0	33200	3.66	7.8	19500	2.44
1396722	25HPA536A30	CSPH*4212A**	58MV(B,C)100–20	34800	12.5	15.0	33200	3.66	7.8	19500	2.44
1398376	25HPA536A30	CSPH*4212A**	58MV(B,C)120–20	34800	12.5	15.0	33200	3.66	7.8	19400	2.44
3015979	25HPA536A30	CSPH*4212A**	58PH*045–08	35400	12.0	14.5	34200	3.62	7.8	20000	2.40
3015980	25HPA536A30	CSPH*4212A**	58PH*070–16	35600	12.5	15.0	33800	3.66	8.0	19800	2.44
3015981	25HPA536A30	CSPH*4212A**	58PH*090–16	35800	12.5	15.5	33600	3.76	8.0	19500	2.48
3015982	25HPA536A30	CSPH*4212A**	58PH*110–20	36000	12.5	15.5	33600	3.78	8.0	19600	2.50
903224	25HPA536A30	CSPH*4212A**+TDR		35000	12.0	14.0	34400	3.64	7.7	20400	2.38
905949	25HPA542A30	†FX4CN(B,F)048		42000	12.5	15.5	42000	3.80	8.5	25400	2.64
1258741	25HPA542A30	FE4AN(B,F)003+UI		40500	12.0	14.5	40500	3.50	8.1	24800	2.52
1258744	25HPA542A30	FE4AN(B,F)005+UI		42000	12.5	15.5	41000	3.72	8.5	25000	2.62
1258738	25HPA542A30	FE4ANB006+UI		42000	13.0	16.0	41500	3.82	8.7	25000	2.66
904052	25HPA542A30	FE5ANB004		42000	13.0	16.0	41500	3.86	8.7	25000	2.68
1258747	25HPA542A30	FE5ANB004+UI		42000	13.0	16.0	41500	3.86	8.7	25000	2.68
3023305	25HPA542A30	FV4BN(B,F)003		40500	11.5	14.5	40500	3.50	8.1	24800	2.52
3023308	25HPA542A30	FV4BN(B,F)005		42000	12.5	15.5	41000	3.72	8.5	25000	2.62
904495	25HPA542A30	FV4BNB006		42000	13.0	16.0	41500	3.82	8.7	25000	2.66
906458	25HPA542A30	FX4CN(B,F)042		42000	12.0	14.5	41500	3.66	8.4	25600	2.56
903719	25HPA542A30	FY4ANF042		41500	11.2	13.5	42000	3.50	8.0	26200	2.46
903380	25HPA542A30	FY4ANF048		42000	11.5	14.0	42500	3.60	8.2	26200	2.50
904287	25HPA542A30	CAP**4221A**	58CV(A,X)110–20	41000	12.0	14.5	40500	3.50	8.1	24800	2.52
3107076	25HPA542A30	CAP**4221A**	58MEB100–20	41000	12.0	14.5	40500	3.56	8.1	25000	2.54
1392895	25HPA542A30	CAP**4221A**	58MV(B,C)080–14	40500	11.5	14.0	40500	3.42	8.0	25000	2.48
1394342	25HPA542A30	CAP**4221A**	58MV(B,C)080–20	40500	12.0	14.0	40500	3.46	8.0	25000	2.50
1396075	25HPA542A30	CAP**4221A**	58MV(B,C)100–20	40500	12.0	14.0	40500	3.48	8.0	25000	2.50
3015983	25HPA542A30	CAP**4221A**	58PH*090–16	41000	12.0	14.5	40500	3.52	8.0	25000	2.52
3015984	25HPA542A30	CAP**4221A**	58PH*110–20	41000	12.0	14.5	40500	3.54	8.1	24800	2.54
1116824	25HPA542A30	CAP**4221A**	58UVB080–14	40500	11.5	14.0	40500	3.42	8.0	25000	2.48
1116827	25HPA542A30	CAP**4221A**	58UVB080–20	40500	12.0	14.0	40500	3.46	8.0	25000	2.50
1116830	25HPA542A30	CAP**4221A**	58UVB100–20	40500	12.0	14.0	40500	3.48	8.0	25000	2.50
906155	25HPA542A30	CAP**4221A**+TDR		41000	11.2	13.5	42000	3.48	8.0	26000	2.46
906196	25HPA542A30	CAP**4224A**	58CV(A,X)135–22	41000	12.0	14.5	40500	3.52	8.2	24800	2.54
903843	25HPA542A30	CAP**4224A**	58CV(A,X)155–22	41000	12.0	14.5	40500	3.52	8.2	24600	2.54
3107077	25HPA542A30	CAP**4224A**	58MEB120–20	41000	12.0	14.5	40500	3.60	8.2	24800	2.56
1397852	25HPA542A30	CAP**4224A**	58MV(B,C)120–20	40500	12.0	14.5	40500	3.48	8.0	24800	2.50
906498	25HPA542A30	CAP**4224A**	58MVB040–14	40500	11.5	14.0	40500	3.44	8.0	25000	2.48
3015985	25HPA542A30	CAP**4224A**	58PH*135–20	41000	12.0	14.5	40500	3.56	8.1	25000	2.54
1116836	25HPA542A30	CAP**4224A**	58UVB120–20	40500	12.0	14.5	40500	3.48	8.0	24800	2.50
903687	25HPA542A30	CAP**4224A**+TDR		41000	11.2	13.5	42000	3.48	8.0	26000	2.46
904094	25HPA542A30	CAP**4817A**	58CV(A,X)090–16	40000	12.0	14.5	41000	3.64	8.3	25200	2.58
3107078	25HPA542A30	CAP**4817A**	58MEB040–12	42000	12.0	14.5	41500	3.70	8.3	25400	2.58
3107079	25HPA542A30	CAP**4817A**	58MEB060–12	42000	12.0	14.5	41500	3.68	8.3	25400	2.58
3107080	25HPA542A30	CAP**4817A**	58MEB080–12	42000	12.0	14.5	41500	3.70	8.3	25400	2.58
3107081	25HPA542A30	CAP**4817A**	58MEB080–16	42000	12.0	14.5	41500	3.66	8.3	25200	2.58
1391426	25HPA542A30	CAP**4817A**	58MV(B,C)060–14	40000	12.0	14.0	41500	3.62	8.3	25200	2.56
3015986	25HPA542A30	CAP**4817A**	58PH*070–16	41500	11.5	14.0	42000	3.60	8.2	25800	2.52
1116839	25HPA542A30	CAP**4817A**	58UVB060–14	40000	12.0	14.0	41500	3.62	8.3	25200	2.56
904170	25HPA542A30	CAP**4817A**+TDR		40500	11.5	14.0	42500	3.66	8.3	26200	2.52
905411	25HPA542A30	CAP**4821A**	58CV(A,X)110–20	41500	12.0	14.5	41000	3.62	8.3	25000	2.56
3107082	25HPA542A30	CAP**4821A**	58MEB100–20	42000	12.5	15.0	41000	3.68	8.3	25000	2.60
1392874	25HPA542A30	CAP**4821A**	58MV(B,C)080–14	41000	12.0	14.0	41000	3.54	8.2	25200	2.52
1394300	25HPA542A30	CAP**4821A**	58MV(B,C)080–20	41500	12.0	14.5	41000	3.58	8.2	25200	2.54
1396036	25HPA542A30	CAP**4821A**	58MV(B,C)100–20	41500	12.0	14.5	41000	3.60	8.3	25000	2.56
3015987	25HPA542A30	CAP**4821A**	58PH*090–16	41500	12.0	14.5	41000	3.64	8.2	25200	2.58
3015988	25HPA542A30	CAP**4821A**	58PH*110–20	41500	12.5	15.0	41000	3.68	8.2	25000	2.60
1116842	25HPA542A30	CAP**4821A**	58UVB080–14	41000	12.0	14.0	41000	3.54	8.2	25200	2.52
1116845	25HPA542A30	CAP**4821A**	58UVB080–20	41500	12.0	14.5	41000	3.58	8.2	25200	2.54
1116848	25HPA542A30	CAP**4821A**	58UVB100–20	41500	12.0	14.5	41000	3.60	8.3	25000	2.56
905337	25HPA542A30	CAP**4821A**+TDR		41500	11.5	14.0	42500	3.60	8.2	26200	2.50
904056	25HPA542A30	CAP**4824A**	58CV(A,X)135–22	41500	12.5	15.0	41000	3.64	8.4	25000	2.58
903338	25HPA542A30	CAP**4824A**	58CV(A,X)155–22	41500	12.5	15.0	41000	3.64	8.3	24800	2.58
3107083	25HPA542A30	CAP**4824A**	58MEB120–20	42000	12.5	15.0	41000	3.72	8.4	25000	2.60
1397813	25HPA542A30	CAP**4824A**	58MV(B,C)120–20	41500	12.0	14.5	41000	3.58	8.2	25000	2.56
905986	25HPA542A30	CAP**4824A**	58MVB040–14	41000	12.0	14.0	41000	3.54	8.2	25200	2.52

See notes on page 22

COMBINATION RATINGS CONTINUED

ARI Ref. No.	Model Number	Coil Model Number	Furnace Model Number	Cooling Capacity	EER	SEER	High Temp		HSPF	Low Temp	
							E Capacity	E COP		H Capacity	H COP
3015989	25HPA542A30	CAP**4824A**	58PH*135−20	41500	12.5	15.0	41000	3.66	8.2	25200	2.58
1116854	25HPA542A30	CAP**4824A**	58UVB120−20	41500	12.0	14.5	41000	3.58	8.2	25000	2.56
903802	25HPA542A30	CAP**4824A**+TDR		41500	11.5	14.0	42500	3.60	8.2	26200	2.50
903248	25HPA542A30	CNPF*4818A**+TDR		40500	11.2	13.5	41500	3.56	8.0	26000	2.48
905968	25HPA542A30	CNPH*4221A**	58CV(A,X)070−12	40500	12.0	14.0	40500	3.48	8.0	25000	2.50
905551	25HPA542A30	CNPH*4221A**	58CV(A,X)090−16	40500	12.0	14.0	40500	3.52	8.2	24800	2.54
905308	25HPA542A30	CNPH*4221A**	58CV(A,X)110−20	41000	12.0	14.5	40500	3.56	8.2	24600	2.56
903022	25HPA542A30	CNPH*4221A**	58CV(A,X)135−22	41000	12.0	14.5	40500	3.58	8.2	24600	2.56
904652	25HPA542A30	CNPH*4221A**	58CV(A,X)155−22	41000	12.0	14.5	40500	3.56	8.2	24600	2.56
3107091	25HPA542A30	CNPH*4221A**	58MEB040−12	41000	11.5	14.0	41000	3.52	8.0	25200	2.52
3107092	25HPA542A30	CNPH*4221A**	58MEB060−12	41000	11.5	14.0	41000	3.52	8.0	25200	2.52
3107093	25HPA542A30	CNPH*4221A**	58MEB080−12	41000	11.5	14.0	41000	3.52	8.0	25200	2.52
3107094	25HPA542A30	CNPH*4221A**	58MEB080−16	41000	11.5	14.0	41000	3.50	7.9	25000	2.50
3107095	25HPA542A30	CNPH*4221A**	58MEB100−20	41000	12.0	14.5	40500	3.54	8.0	24800	2.54
3107096	25HPA542A30	CNPH*4221A**	58MEB120−20	41000	12.0	14.5	40500	3.56	8.2	24800	2.54
1391702	25HPA542A30	CNPH*4221A**	58MV(B,C)060−14	40500	12.0	14.0	40500	3.50	8.0	24800	2.52
1393124	25HPA542A30	CNPH*4221A**	58MV(B,C)080−14	40500	12.0	14.0	40500	3.46	8.0	24800	2.50
1394553	25HPA542A30	CNPH*4221A**	58MV(B,C)080−20	40500	12.0	14.0	40500	3.50	8.0	24800	2.52
1396289	25HPA542A30	CNPH*4221A**	58MV(B,C)100−20	40500	12.0	14.0	40500	3.52	8.2	24800	2.54
1398026	25HPA542A30	CNPH*4221A**	58MV(B,C)120−20	40500	12.0	14.5	40500	3.52	8.2	24600	2.54
903446	25HPA542A30	CNPH*4221A**	58MVB040−14	40500	12.0	14.0	40500	3.48	8.0	24800	2.50
3015995	25HPA542A30	CNPH*4221A**	58PH*070−16	40500	11.2	13.5	41500	3.44	7.8	25600	2.46
3015996	25HPA542A30	CNPH*4221A**	58PH*090−16	41000	12.0	14.5	40500	3.50	8.0	25000	2.52
3015997	25HPA542A30	CNPH*4221A**	58PH*110−20	41000	12.0	14.5	40500	3.52	8.0	24800	2.52
3015998	25HPA542A30	CNPH*4221A**	58PH*135−20	41000	12.0	14.5	40500	3.50	8.0	25000	2.52
904868	25HPA542A30	CNPH*4221A**+TDR		41000	11.2	13.5	42000	3.50	8.0	26000	2.46
906282	25HPA542A30	CNPH*4821A**	58CV(A,X)070−12	41000	12.0	14.0	41000	3.56	8.2	25200	2.52
903610	25HPA542A30	CNPH*4821A**	58CV(A,X)090−16	41000	12.0	14.0	41000	3.62	8.3	25000	2.56
904047	25HPA542A30	CNPH*4821A**	58CV(A,X)110−20	41500	12.0	14.5	41000	3.64	8.3	25000	2.58
905695	25HPA542A30	CNPH*4821A**	58CV(A,X)135−22	41500	12.0	14.5	41000	3.66	8.4	25000	2.58
905341	25HPA542A30	CNPH*4821A**	58CV(A,X)155−22	41500	12.0	14.5	41000	3.64	8.4	24800	2.58
3107097	25HPA542A30	CNPH*4821A**	58MEB040−12	42000	12.0	14.5	41500	3.68	8.3	25400	2.58
3107098	25HPA542A30	CNPH*4821A**	58MEB060−12	42000	12.0	14.5	41500	3.66	8.3	25400	2.58
3107099	25HPA542A30	CNPH*4821A**	58MEB080−12	42000	12.0	14.5	41500	3.68	8.3	25400	2.58
3107100	25HPA542A30	CNPH*4821A**	58MEB080−16	41500	12.0	14.5	41000	3.64	8.2	25200	2.56
3107101	25HPA542A30	CNPH*4821A**	58MEB100−20	42000	12.5	15.0	41000	3.70	8.3	25200	2.60
3107102	25HPA542A30	CNPH*4821A**	58MEB120−20	42000	12.5	15.0	41000	3.72	8.4	25000	2.62
1391723	25HPA542A30	CNPH*4821A**	58MV(B,C)060−14	41000	12.0	14.0	41000	3.58	8.2	25000	2.54
1393145	25HPA542A30	CNPH*4821A**	58MV(B,C)080−14	41000	12.0	14.0	41000	3.54	8.2	25200	2.52
1394592	25HPA542A30	CNPH*4821A**	58MV(B,C)080−20	41500	12.0	14.5	41000	3.58	8.2	25200	2.54
1396328	25HPA542A30	CNPH*4821A**	58MV(B,C)100−20	41500	12.0	14.5	41000	3.60	8.3	25000	2.56
1398065	25HPA542A30	CNPH*4821A**	58MV(B,C)120−20	41500	12.0	14.5	41000	3.60	8.3	25000	2.56
904071	25HPA542A30	CNPH*4821A**	58MVB040−14	41000	12.0	14.0	41000	3.56	8.2	25200	2.52
3015999	25HPA542A30	CNPH*4821A**	58PH*070−16	41500	11.5	14.0	42000	3.58	8.1	25600	2.52
3016000	25HPA542A30	CNPH*4821A**	58PH*090−16	42000	12.5	15.0	41000	3.66	8.2	25200	2.58
3016001	25HPA542A30	CNPH*4821A**	58PH*110−20	42000	12.5	15.0	41000	3.68	8.2	25000	2.60
3016002	25HPA542A30	CNPH*4821A**	58PH*135−20	42000	12.5	15.0	41000	3.68	8.2	25200	2.58
903630	25HPA542A30	CNPH*4821A**+TDR		41500	11.5	14.0	42500	3.60	8.2	26200	2.50
3107074	25HPA542A30	CNPV*4217A**	58CV(A,X)090−16	41000	12.0	14.5	41000	3.54	8.1	25000	2.54
3107084	25HPA542A30	CNPV*4217A**	58MEB040−12	41500	12.0	14.5	41000	3.58	8.2	25200	2.54
3107085	25HPA542A30	CNPV*4217A**	58MEB060−12	41500	12.0	14.5	41500	3.58	8.2	25200	2.54
3107086	25HPA542A30	CNPV*4217A**	58MEB080−12	41500	12.0	14.5	41000	3.58	8.2	25200	2.54
3107087	25HPA542A30	CNPV*4217A**	58MEB080−16	41000	12.0	14.5	41000	3.54	8.0	25200	2.52
3107073	25HPA542A30	CNPV*4217A**	58MV(B,C)060−14	41500	12.0	14.0	41500	3.56	8.1	25400	2.52
3107075	25HPA542A30	CNPV*4217A**	58PH*070−16	41000	11.5	13.5	41500	3.50	8.0	25600	2.48
3107072	25HPA542A30	CNPV*4217A**+TDR		41500	11.5	13.5	42000	3.56	8.0	26000	2.50
904497	25HPA542A30	CNPV*4221A**	58CV(A,X)110−20	41000	12.0	14.5	40500	3.56	8.2	24600	2.56
3107088	25HPA542A30	CNPV*4221A**	58MEB100−20	41000	12.0	14.5	40500	3.54	8.0	24800	2.54
1393227	25HPA542A30	CNPV*4221A**	58MV(B,C)080−14	40500	12.0	14.0	40500	3.46	8.0	24800	2.50
1394698	25HPA542A30	CNPV*4221A**	58MV(B,C)080−20	40500	12.0	14.0	40500	3.50	8.1	24800	2.52
1396434	25HPA542A30	CNPV*4221A**	58MV(B,C)100−20	40500	12.0	14.0	40500	3.52	8.2	24800	2.54
3015990	25HPA542A30	CNPV*4221A**	58PH*090−16	41000	12.0	14.5	40500	3.50	8.0	25000	2.52
3015991	25HPA542A30	CNPV*4221A**	58PH*110−20	41000	12.0	14.5	40500	3.52	8.0	24800	2.52
1116857	25HPA542A30	CNPV*4221A**	58UVB080−14	40500	12.0	14.0	40500	3.46	8.0	24800	2.50
1116860	25HPA542A30	CNPV*4221A**	58UVB080−20	40500	12.0	14.0	40500	3.50	8.1	24800	2.52
1116863	25HPA542A30	CNPV*4221A**	58UVB100−20	40500	12.0	14.0	40500	3.52	8.2	24800	2.54
904182	25HPA542A30	CNPV*4221A**+TDR		41000	11.2	13.5	42000	3.50	8.0	26000	2.46
905732	25HPA542A30	CNPV*4821A**	58CV(A,X)110−20	41500	12.0	14.5	41000	3.64	8.3	25000	2.58
3107115	25HPA542A30	CNPV*4821A**	58MEB080−12	42000	12.0	14.5	41500	3.68	8.4	25400	2.58
3107116	25HPA542A30	CNPV*4821A**	58MEB080−16	41500	12.0	14.5	41000	3.64	8.4	25200	2.56
3107089	25HPA542A30	CNPV*4821A**	58MEB100−20	42000	12.5	15.0	41000	3.70	8.3	25200	2.60
1393248	25HPA542A30	CNPV*4821A**	58MV(B,C)080−14	41000	12.0	14.0	40500	3.54	8.2	25200	2.52
1394737	25HPA542A30	CNPV*4821A**	58MV(B,C)080−20	41500	12.0	14.5	40500	3.58	8.2	25200	2.54
1396473	25HPA542A30	CNPV*4821A**	58MV(B,C)100−20	41500	12.0	14.5	41000	3.60	8.3	25000	2.56
3015992	25HPA542A30	CNPV*4821A**	58PH*090−16	42000	12.0	15.0	41000	3.66	8.2	25200	2.58
3015993	25HPA542A30	CNPV*4821A**	58PH*110−20	42000	12.5	15.0	41000	3.68	8.2	25000	2.60
1116866	25HPA542A30	CNPV*4821A**	58UVB080−14	41000	12.0	14.0	40500	3.54	8.2	25200	2.52
1116869	25HPA542A30	CNPV*4821A**	58UVB080−20	41500	12.0	14.5	40500	3.58	8.2	25200	2.54
1116872	25HPA542A30	CNPV*4821A**	58UVB100−20	41500	12.0	14.5	41000	3.60	8.3	25000	2.56

See notes on page 22

COMBINATION RATINGS CONTINUED

ARI Ref. No.	Model Number	Coil Model Number	Furnace Model Number	Cooling Capacity	EER	SEER	High Temp		HSPF	Low Temp	
							E Capacity	E COP		H Capacity	H COP
902962	25HPA542A30	CNPV*4821A**+TDR		41500	11.5	14.0	42500	3.60	8.2	26200	2.50
903775	25HPA542A30	CNPV*4824A**	58CV(A,X)135–22	41000	12.0	14.5	41000	3.66	8.3	25000	2.58
904650	25HPA542A30	CNPV*4824A**	58CV(A,X)155–22	41000	12.0	14.5	41000	3.64	8.3	24800	2.58
3107090	25HPA542A30	CNPV*4824A**	58MEB120–20	42000	12.5	15.0	41000	3.72	8.4	25000	2.62
1398128	25HPA542A30	CNPV*4824A**	58MV(B,C)120–20	40500	12.0	14.5	41000	3.60	8.3	25000	2.56
903278	25HPA542A30	CNPV*4824A**	58MVB040–14	40500	12.0	14.0	41000	3.56	8.2	25200	2.52
3015994	25HPA542A30	CNPV*4824A**	58PH*135–20	42000	12.5	15.0	41000	3.68	8.2	25200	2.58
1116878	25HPA542A30	CNPV*4824A**	58UVB120–20	40500	12.0	14.5	41000	3.60	8.3	25000	2.56
905203	25HPA542A30	CNPV*4824A**+TDR		41500	11.5	14.0	42500	3.60	8.2	26200	2.50
905649	25HPA542A30	CSPH*4212A**	58CV(A,X)070–12	40500	12.0	14.0	40500	3.56	8.2	25400	2.52
906462	25HPA542A30	CSPH*4212A**	58CV(A,X)090–16	40500	12.0	14.5	40500	3.60	8.2	25000	2.56
904627	25HPA542A30	CSPH*4212A**	58CV(A,X)110–20	41000	12.0	14.5	40500	3.62	8.2	25200	2.56
903816	25HPA542A30	CSPH*4212A**	58CV(A,X)135–22	41000	12.0	14.5	40500	3.64	8.2	25000	2.58
906264	25HPA542A30	CSPH*4212A**	58CV(A,X)155–22	41000	12.0	14.5	40500	3.64	8.2	25000	2.58
3107103	25HPA542A30	CSPH*4212A**	58MEB040–12	42000	12.0	14.5	41500	3.66	8.3	25400	2.56
3107104	25HPA542A30	CSPH*4212A**	58MEB060–12	42000	12.0	14.5	41500	3.66	8.2	25400	2.56
3107105	25HPA542A30	CSPH*4212A**	58MEB080–12	42000	12.0	14.5	41500	3.66	8.3	25400	2.56
3107106	25HPA542A30	CSPH*4212A**	58MEB080–16	41500	12.0	14.5	41000	3.62	8.2	25200	2.56
3107107	25HPA542A30	CSPH*4212A**	58MEB100–20	42000	12.5	15.0	41000	3.68	8.3	25000	2.58
3107108	25HPA542A30	CSPH*4212A**	58MEB120–20	42000	12.5	15.0	41000	3.70	8.3	25000	2.60
1392069	25HPA542A30	CSPH*4212A**	58MV(B,C)060–14	40500	12.0	14.5	40500	3.58	8.0	25200	2.54
1393492	25HPA542A30	CSPH*4212A**	58MV(B,C)080–14	40500	12.0	14.0	40500	3.54	8.0	25200	2.52
1394983	25HPA542A30	CSPH*4212A**	58MV(B,C)080–20	40500	12.0	14.5	40500	3.58	8.2	25200	2.54
1396725	25HPA542A30	CSPH*4212A**	58MV(B,C)100–20	40500	12.0	14.5	40500	3.60	8.2	25200	2.54
1398379	25HPA542A30	CSPH*4212A**	58MV(B,C)120–20	40500	12.0	14.5	40500	3.58	8.2	25000	2.56
904570	25HPA542A30	CSPH*4212A**	58MVB040–14	40500	11.5	14.0	40500	3.54	8.0	25200	2.52
3016003	25HPA542A30	CSPH*4212A**	58PH*070–16	41500	11.5	14.0	42000	3.58	8.1	25600	2.52
3016004	25HPA542A30	CSPH*4212A**	58PH*090–16	42000	12.5	15.0	41000	3.64	8.2	25200	2.58
3016005	25HPA542A30	CSPH*4212A**	58PH*110–20	42000	12.5	15.0	41000	3.66	8.2	25000	2.58
3016006	25HPA542A30	CSPH*4212A**	58PH*135–20	42000	12.5	15.0	41000	3.64	8.2	25200	2.58
904263	25HPA542A30	CSPH*4212A**+TDR		41000	11.5	14.0	42000	3.62	8.0	26200	2.52
904137	25HPA542A30	CSPH*4812A**	58CV(A,X)070–12	41000	12.0	14.5	41000	3.58	8.2	25400	2.54
905257	25HPA542A30	CSPH*4812A**	58CV(A,X)090–16	41000	12.0	14.5	41000	3.64	8.2	25200	2.56
906273	25HPA542A30	CSPH*4812A**	58CV(A,X)110–20	41500	12.0	14.5	41000	3.64	8.3	25200	2.58
903605	25HPA542A30	CSPH*4812A**	58CV(A,X)135–22	41500	12.0	14.5	41000	3.68	8.4	25000	2.60
904511	25HPA542A30	CSPH*4812A**	58CV(A,X)155–22	41500	12.0	14.5	41000	3.66	8.4	25000	2.60
3107109	25HPA542A30	CSPH*4812A**	58MEB040–12	42000	12.0	14.5	41500	3.68	8.3	25400	2.58
3107110	25HPA542A30	CSPH*4812A**	58MEB060–12	42000	12.0	14.5	41500	3.68	8.3	25400	2.58
3107111	25HPA542A30	CSPH*4812A**	58MEB080–12	42000	12.0	14.5	41500	3.68	8.3	25400	2.58
3107112	25HPA542A30	CSPH*4812A**	58MEB080–16	42000	12.0	14.5	41500	3.66	8.2	25200	2.58
3107113	25HPA542A30	CSPH*4812A**	58MEB100–20	42000	12.5	15.0	41000	3.70	8.3	25200	2.60
3107114	25HPA542A30	CSPH*4812A**	58MEB120–20	42000	12.5	15.0	41000	3.72	8.4	25200	2.62
1392090	25HPA542A30	CSPH*4812A**	58MV(B,C)060–14	41000	12.0	14.5	41000	3.60	8.2	25200	2.56
1393513	25HPA542A30	CSPH*4812A**	58MV(B,C)080–14	41000	12.0	14.5	41000	3.56	8.2	25400	2.52
1395022	25HPA542A30	CSPH*4812A**	58MV(B,C)080–20	41500	12.0	14.5	41000	3.60	8.3	25200	2.54
1396764	25HPA542A30	CSPH*4812A**	58MV(B,C)100–20	41500	12.0	14.5	41000	3.62	8.3	25200	2.56
1398418	25HPA542A30	CSPH*4812A**	58MV(B,C)120–20	41500	12.0	14.5	41000	3.62	8.3	25000	2.56
904336	25HPA542A30	CSPH*4812A**	58MVB040–14	41000	12.0	14.0	41000	3.58	8.2	25200	2.54
3016007	25HPA542A30	CSPH*4812A**	58PH*070–16	41500	11.5	14.0	42000	3.60	8.1	25800	2.52
3016008	25HPA542A30	CSPH*4812A**	58PH*090–16	42000	12.5	15.0	41000	3.68	8.2	25200	2.58
3016009	25HPA542A30	CSPH*4812A**	58PH*110–20	42000	12.5	15.0	41000	3.68	8.2	25000	2.60
3016010	25HPA542A30	CSPH*4812A**	58PH*135–20	42000	12.5	15.0	41000	3.66	8.2	25200	2.58
905821	25HPA542A30	CSPH*4812A**+TDR		41500	11.5	14.0	42500	3.64	8.2	26200	2.52
906378	25HPA548A30	†FX4CN(B,F)060		48000	13.0	15.5	48000	3.98	9.0	30000	2.68
1258756	25HPA548A30	FE4AN(B,F)005+UI		48000	12.5	15.0	47000	3.74	8.4	29400	2.60
1258753	25HPA548A30	FE4ANB006+UI		48000	13.0	15.5	47000	3.88	8.7	29400	2.66
1483174	25HPA548A30	FV4BN(B,F)005		48000	12.5	15.0	47000	3.74	8.4	29400	2.60
903980	25HPA548A30	FV4BNB006		48000	13.0	15.5	47000	3.88	8.7	29400	2.66
903678	25HPA548A30	FX4CN(B,F)048		48000	12.5	15.0	48000	3.82	8.5	30000	2.62
905358	25HPA548A30	FY4ANB060		48000	12.0	14.0	49000	3.76	8.4	31000	2.54
903504	25HPA548A30	FY4ANF048		48000	11.2	13.5	48000	3.66	8.2	31000	2.50
903559	25HPA548A30	CAP**4817A**	58CV(A,X)090–16	46000	12.0	14.0	47000	3.66	8.2	29800	2.54
3107117	25HPA548A30	CAP**4817A**	58MEB080–16	47500	12.0	14.0	48000	3.70	8.2	30200	2.54
906455	25HPA548A30	CAP**4817A**+TDR		47000	12.0	14.0	47500	3.64	8.2	30200	2.50
903792	25HPA548A30	CAP**4821A**	58CV(A,X)110–20	47000	12.0	14.0	47000	3.64	8.2	29600	2.54
3107118	25HPA548A30	CAP**4821A**	58MEB100–20	47500	12.5	14.5	47000	3.68	8.2	29600	2.56
1394297	25HPA548A30	CAP**4821A**	58MV(B,C)080–20	47000	12.0	14.0	47000	3.58	8.1	29800	2.50
1396033	25HPA548A30	CAP**4821A**	58MV(B,C)100–20	47000	12.0	14.5	47000	3.60	8.2	29600	2.52
3016011	25HPA548A30	CAP**4821A**	58PH*090–16	47500	12.0	14.5	47000	3.66	8.2	29800	2.54
3016012	25HPA548A30	CAP**4821A**	58PH*110–20	47500	12.0	14.5	47000	3.68	8.2	29400	2.56
1116881	25HPA548A30	CAP**4821A**	58UVB080–20	47000	12.0	14.0	47000	3.58	8.1	29800	2.50
1116884	25HPA548A30	CAP**4821A**	58UVB100–20	47000	12.0	14.5	47000	3.60	8.2	29600	2.52
905446	25HPA548A30	CAP**4821A**+TDR		48000	12.0	14.0	48500	3.68	8.3	30600	2.52
906298	25HPA548A30	CAP**4824A**	58CV(A,X)135–22	47500	12.0	14.5	47000	3.66	8.2	29400	2.56
905911	25HPA548A30	CAP**4824A**	58CV(A,X)155–22	47500	12.5	15.0	47000	3.70	8.3	29400	2.58
3107119	25HPA548A30	CAP**4824A**	58MEB120–20	47500	12.5	14.5	47000	3.72	8.2	29600	2.58
1397810	25HPA548A30	CAP**4824A**	58MV(B,C)120–20	47000	12.0	14.5	47000	3.60	8.2	29600	2.52
3016013	25HPA548A30	CAP**4824A**	58PH*135–20	47500	12.0	14.5	47000	3.68	8.2	29600	2.56

See notes on page 22

COMBINATION RATINGS CONTINUED

ARI Ref. No.	Model Number	Coil Model Number	Furnace Model Number	Cooling Capacity	EER	SEER	High Temp		HSPF	Low Temp	
							E Capacity	E COP		H Capacity	H COP
1116887	25HPA548A30	CAP**4824A**	58UVB120−20	47000	12.0	14.5	47000	3.60	8.2	29600	2.52
904840	25HPA548A30	CAP**4824A**+TDR		48000	12.0	14.0	48500	3.68	8.3	30600	2.52
903222	25HPA548A30	CAP**6021A**	58CV(A,X)110−20	48000	12.5	15.0	47000	3.72	8.3	29600	2.58
3107120	25HPA548A30	CAP**6021A**	58MEB100−20	48000	12.5	15.0	47500	3.78	8.3	29800	2.62
1394276	25HPA548A30	CAP**6021A**	58MV(B,C)080−20	48000	12.0	14.5	47500	3.66	8.2	29800	2.54
1396012	25HPA548A30	CAP**6021A**	58MV(B,C)100−20	48000	12.0	14.5	47000	3.68	8.3	29800	2.56
3016014	25HPA548A30	CAP**6021A**	58PH*090−16	48000	12.5	15.0	47500	3.76	8.3	30000	2.60
3016015	25HPA548A30	CAP**6021A**	58PH*110−20	48000	12.5	15.0	47000	3.78	8.3	29600	2.62
1116890	25HPA548A30	CAP**6021A**	58UVB080−20	48000	12.0	14.5	47500	3.66	8.2	29800	2.54
1116893	25HPA548A30	CAP**6021A**	58UVB100−20	48000	12.0	14.5	47000	3.68	8.3	29800	2.56
904503	25HPA548A30	CAP**6021A**+TDR		48000	12.0	14.0	48500	3.74	8.4	30800	2.54
904846	25HPA548A30	CAP**6024A**	58CV(A,X)135−22	48000	12.5	15.0	47000	3.74	8.3	29600	2.60
904298	25HPA548A30	CAP**6024A**	58CV(A,X)155−22	48000	12.5	15.0	47000	3.76	8.4	29400	2.60
3107121	25HPA548A30	CAP**6024A**	58MEB120−20	48000	12.5	15.0	47500	3.78	8.4	29800	2.62
1397789	25HPA548A30	CAP**6024A**	58MV(B,C)120−20	48000	12.0	14.5	47000	3.66	8.2	29800	2.56
3016016	25HPA548A30	CAP**6024A**	58PH*135−20	48000	12.5	15.0	47500	3.74	8.3	29800	2.60
1116896	25HPA548A30	CAP**6024A**	58UVB120−20	48000	12.0	14.5	47000	3.66	8.2	29800	2.56
904956	25HPA548A30	CAP**6024A**+TDR		48000	12.0	14.0	48500	3.74	8.4	30800	2.54
905916	25HPA548A30	CNPF*4818A**+TDR		47000	11.5	14.0	47000	3.52	8.0	30000	2.46
903066	25HPA548A30	CNPH*4821A**	58CV(A,X)090−16	47000	12.0	14.5	47000	3.62	8.2	29600	2.52
905514	25HPA548A30	CNPH*4821A**	58CV(A,X)110−20	47000	12.0	14.5	47000	3.64	8.2	29600	2.54
904306	25HPA548A30	CNPH*4821A**	58CV(A,X)135−22	47500	12.0	14.5	47000	3.66	8.2	29400	2.56
903732	25HPA548A30	CNPH*4821A**	58CV(A,X)155−22	47500	12.5	15.0	47000	3.70	8.3	29400	2.58
3107125	25HPA548A30	CNPH*4821A**	58MEB080−16	47500	12.0	14.0	47500	3.66	8.1	30000	2.54
3107126	25HPA548A30	CNPH*4821A**	58MEB100−20	47500	12.5	14.5	47000	3.70	8.2	29600	2.56
3107127	25HPA548A30	CNPH*4821A**	58MEB120−20	48000	12.5	15.0	47000	3.72	8.2	29600	2.58
1394595	25HPA548A30	CNPH*4821A**	58MV(B,C)080−20	47000	12.0	14.0	47000	3.60	8.1	29800	2.52
1396331	25HPA548A30	CNPH*4821A**	58MV(B,C)100−20	47500	12.0	14.5	47000	3.62	8.2	29600	2.52
1398068	25HPA548A30	CNPH*4821A**	58MV(B,C)120−20	47000	12.0	14.5	47000	3.60	8.2	29600	2.52
3016021	25HPA548A30	CNPH*4821A**	58PH*090−16	47500	12.0	14.5	47000	3.68	8.2	29800	2.56
3016022	25HPA548A30	CNPH*4821A**	58PH*110−20	47500	12.5	15.0	47000	3.70	8.2	29400	2.58
3016023	25HPA548A30	CNPH*4821A**	58PH*135−20	47500	12.0	14.5	47000	3.68	8.2	29600	2.56
904185	25HPA548A30	CNPH*4821A**+TDR		48000	12.0	14.0	48500	3.68	8.3	30600	2.52
904183	25HPA548A30	CNPH*6024A**	58CV(A,X)090−16	48000	12.0	14.5	47000	3.68	8.2	29600	2.56
905980	25HPA548A30	CNPH*6024A**	58CV(A,X)110−20	48000	12.5	15.0	47000	3.70	8.3	29600	2.58
904969	25HPA548A30	CNPH*6024A**	58CV(A,X)135−22	48000	12.5	15.0	47000	3.72	8.3	29400	2.60
904982	25HPA548A30	CNPH*6024A**	58CV(A,X)155−22	48000	12.5	15.0	47000	3.76	8.4	29400	2.60
3107128	25HPA548A30	CNPH*6024A**	58MEB080−16	48000	12.5	14.5	47500	3.72	8.2	30200	2.56
3107129	25HPA548A30	CNPH*6024A**	58MEB100−20	48000	12.5	15.0	47500	3.76	8.3	29800	2.60
3107130	25HPA548A30	CNPH*6024A**	58MEB120−20	48000	12.5	15.0	47500	3.80	8.4	29600	2.62
1394616	25HPA548A30	CNPH*6024A**	58MV(B,C)080−20	48000	12.0	14.5	47000	3.66	8.2	29800	2.54
1396352	25HPA548A30	CNPH*6024A**	58MV(B,C)100−20	48000	12.0	14.5	47000	3.68	8.2	29800	2.56
1398089	25HPA548A30	CNPH*6024A**	58MV(B,C)120−20	48000	12.0	14.5	47000	3.66	8.2	29600	2.56
3016024	25HPA548A30	CNPH*6024A**	58PH*090−16	48000	12.5	15.0	47500	3.74	8.3	29800	2.58
3016025	25HPA548A30	CNPH*6024A**	58PH*110−20	48000	12.5	15.0	47000	3.76	8.3	29600	2.60
3016026	25HPA548A30	CNPH*6024A**	58PH*135−20	48000	12.5	15.0	47500	3.76	8.3	29800	2.60
904741	25HPA548A30	CNPH*6024A**+TDR		48000	12.0	14.0	48500	3.72	8.3	30800	2.54
903196	25HPA548A30	CNPV*4821A**	58CV(A,X)110−20	47000	12.0	14.5	47000	3.64	8.2	29600	2.54
3107122	25HPA548A30	CNPV*4821A**	58MEB100−20	47500	12.5	14.5	47000	3.70	8.2	29600	2.56
1394740	25HPA548A30	CNPV*4821A**	58MV(B,C)080−20	47000	12.0	14.0	47000	3.60	8.1	29800	2.52
1396476	25HPA548A30	CNPV*4821A**	58MV(B,C)100−20	47500	12.0	14.5	47000	3.62	8.2	29600	2.52
3016017	25HPA548A30	CNPV*4821A**	58PH*090−16	47500	12.0	14.5	47000	3.68	8.2	29800	2.56
3016018	25HPA548A30	CNPV*4821A**	58PH*110−20	47500	12.5	15.0	47000	3.70	8.2	29400	2.58
1116899	25HPA548A30	CNPV*4821A**	58UVB080−20	47000	12.0	14.0	47000	3.60	8.1	29800	2.52
1116902	25HPA548A30	CNPV*4821A**	58UVB100−20	47500	12.0	14.5	47000	3.62	8.2	29600	2.52
904340	25HPA548A30	CNPV*4821A**+TDR		48000	12.0	14.0	48500	3.68	8.3	30600	2.52
905387	25HPA548A30	CNPV*4824A**	58CV(A,X)135−22	47500	12.5	15.0	47000	3.66	8.2	29400	2.56
905592	25HPA548A30	CNPV*4824A**	58CV(A,X)155−22	47500	12.5	15.0	47000	3.70	8.3	29400	2.58
3107123	25HPA548A30	CNPV*4824A**	58MEB120−20	48000	12.5	15.0	47000	3.72	8.2	29600	2.58
1398131	25HPA548A30	CNPV*4824A**	58MV(B,C)120−20	47000	12.0	14.5	47000	3.60	8.2	29600	2.52
3016019	25HPA548A30	CNPV*4824A**	58PH*135−20	47500	12.0	14.5	47000	3.68	8.2	29600	2.56
1116905	25HPA548A30	CNPV*4824A**	58UVB120−20	47000	12.0	14.5	47000	3.60	8.2	29600	2.52
903627	25HPA548A30	CNPV*4824A**+TDR		48000	12.0	14.0	48500	3.68	8.3	30600	2.52
905149	25HPA548A30	CNPV*6024A**	58CV(A,X)135−22	48000	12.5	15.0	47000	3.72	8.3	29400	2.60
906118	25HPA548A30	CNPV*6024A**	58CV(A,X)155−22	48000	12.5	15.0	47000	3.76	8.4	29400	2.60
3107124	25HPA548A30	CNPV*6024A**	58MEB120−20	48000	12.5	15.0	47500	3.80	8.4	29600	2.62
1398152	25HPA548A30	CNPV*6024A**	58MV(B,C)120−20	48000	12.0	14.5	47000	3.66	8.2	29600	2.56
3016020	25HPA548A30	CNPV*6024A**	58PH*135−20	48000	12.5	15.0	47500	3.76	8.3	29800	2.60
1116908	25HPA548A30	CNPV*6024A**	58UVB120−20	48000	12.0	14.5	47000	3.66	8.2	29600	2.56
906533	25HPA548A30	CNPV*6024A**+TDR		48000	12.0	14.0	48500	3.72	8.3	30800	2.54
903093	25HPA548A30	CSPH*4812A**	58CV(A,X)090−16	47000	12.0	14.0	47000	3.66	8.2	29800	2.54
903693	25HPA548A30	CSPH*4812A**	58CV(A,X)110−20	47000	12.0	14.5	47000	3.66	8.2	29800	2.54
904039	25HPA548A30	CSPH*4812A**	58CV(A,X)135−22	47500	12.0	14.5	47000	3.70	8.2	29600	2.56
903675	25HPA548A30	CSPH*4812A**	58CV(A,X)155−22	47500	12.5	15.0	47000	3.72	8.2	29600	2.58
3107131	25HPA548A30	CSPH*4812A**	58MEB080−16	48000	12.0	14.0	47500	3.68	8.2	30000	2.54
3107132	25HPA548A30	CSPH*4812A**	58MEB100−20	48000	12.5	14.5	47000	3.72	8.2	29600	2.58
3107133	25HPA548A30	CSPH*4812A**	58MEB120−20	48000	12.5	14.5	47000	3.74	8.3	29600	2.58
1395025	25HPA548A30	CSPH*4812A**	58MV(B,C)080−20	47000	12.0	14.0	47000	3.62	8.2	29800	2.52
1396767	25HPA548A30	CSPH*4812A**	58MV(B,C)100−20	47000	12.0	14.5	47000	3.64	8.2	29800	2.52

See notes on page 22

COMBINATION RATINGS CONTINUED

ARI Ref. No.	Model Number	Coil Model Number	Furnace Model Number	Cooling Capacity	EER	SEER	High Temp		HSPF	Low Temp	
							E Capacity	E COP		H Capacity	H COP
1398421	25HPA548A30	CSPH*4812A**	58MV(B,C)120–20	47000	12.0	14.5	47000	3.64	8.2	29800	2.54
3016027	25HPA548A30	CSPH*4812A**	58PH*090–16	48000	12.0	14.5	47500	3.70	8.2	29800	2.56
3016028	25HPA548A30	CSPH*4812A**	58PH*110–20	48000	12.5	15.0	47000	3.70	8.2	29600	2.58
3016029	25HPA548A30	CSPH*4812A**	58PH*135–20	48000	12.0	14.5	47000	3.68	8.2	29600	2.56
905637	25HPA548A30	CSPH*4812A**+TDR		48000	11.5	14.0	48500	3.72	8.3	30600	2.54
904154	25HPA548A30	CSPH*6012A**	58CV(A,X)090–16	48000	12.0	14.5	47000	3.72	8.2	29800	2.58
906482	25HPA548A30	CSPH*6012A**	58CV(A,X)110–20	48000	12.0	14.5	47000	3.74	8.3	29600	2.58
903676	25HPA548A30	CSPH*6012A**	58CV(A,X)135–22	48000	12.5	15.0	47000	3.78	8.3	29600	2.60
905230	25HPA548A30	CSPH*6012A**	58CV(A,X)155–22	48000	12.5	15.0	47000	3.80	8.4	29400	2.62
3107134	25HPA548A30	CSPH*6012A**	58MEB080–16	48000	12.5	14.5	48000	3.76	8.3	30200	2.58
3107135	25HPA548A30	CSPH*6012A**	58MEB100–20	48000	12.5	15.0	47500	3.82	8.4	29800	2.62
3107136	25HPA548A30	CSPH*6012A**	58MEB120–20	48000	12.5	15.0	47500	3.84	8.4	29800	2.64
1395046	25HPA548A30	CSPH*6012A**	58MV(B,C)080–20	48000	12.0	14.5	47000	3.70	8.2	29800	2.56
1396788	25HPA548A30	CSPH*6012A**	58MV(B,C)100–20	48000	12.0	14.5	47000	3.72	8.2	29800	2.56
1398442	25HPA548A30	CSPH*6012A**	58MV(B,C)120–20	48000	12.0	14.5	47000	3.70	8.2	29800	2.56
3016030	25HPA548A30	CSPH*6012A**	58PH*090–16	48000	12.5	15.0	47500	3.78	8.4	30000	2.60
3016031	25HPA548A30	CSPH*6012A**	58PH*110–20	48000	12.5	15.0	47500	3.82	8.4	29600	2.62
3016032	25HPA548A30	CSPH*6012A**	58PH*135–20	48000	12.5	15.0	47500	3.80	8.4	29800	2.62
903361	25HPA548A30	CSPH*6012A**+TDR		48000	12.0	14.0	48500	3.78	8.3	30800	2.56
905942	25HPA560A30	†FX4CN(B,F)060		60000	11.5	14.0	59500	3.70	8.4	37000	2.60
1258750	25HPA560A30	FE4ANB006+UI		59500	11.5	14.0	59000	3.68	8.3	36000	2.62
904195	25HPA560A30	FV4BNB006		59500	11.5	14.0	59000	3.68	8.3	36000	2.62
906029	25HPA560A30	FY4ANB060		59500	10.8	13.0	60000	3.56	8.0	37800	2.50
905664	25HPA560A30	CAP**6021A**	58CV(A,X)110–20	58000	11.2	13.5	59000	3.52	8.0	36400	2.52
3107137	25HPA560A30	CAP**6021A**	58MEB100–20	58500	11.0	13.5	58500	3.52	7.8	36000	2.54
3016033	25HPA560A30	CAP**6021A**	58PH*090–16	58500	11.2	13.5	58500	3.50	7.8	36200	2.52
3016034	25HPA560A30	CAP**6021A**	58PH*110–20	59000	11.2	13.5	59000	3.56	8.0	36200	2.56
903940	25HPA560A30	CAP**6021A**+TDR		58000	11.2	13.5	59000	3.52	7.9	36600	2.52
904007	25HPA560A30	CAP**6024A**	58CV(A,X)135–22	58500	11.2	13.5	59000	3.54	8.0	36200	2.54
904553	25HPA560A30	CAP**6024A**	58CV(A,X)155–22	59000	11.2	13.5	58500	3.58	8.0	36000	2.56
3107138	25HPA560A30	CAP**6024A**	58MEB120–20	58500	11.5	13.5	58500	3.54	7.9	36000	2.54
3016035	25HPA560A30	CAP**6024A**	58PH*135–20	58500	11.2	13.5	58500	3.52	7.8	36200	2.52
905640	25HPA560A30	CAP**6024A**+TDR		59000	11.0	13.2	60000	3.58	8.0	37200	2.54
904481	25HPA560A30	CNPH*6024A**	58CV(A,X)110–20	58500	11.2	13.5	58500	3.48	7.9	36200	2.52
903255	25HPA560A30	CNPH*6024A**	58CV(A,X)135–22	58500	11.2	13.5	59000	3.52	7.9	36000	2.54
903346	25HPA560A30	CNPH*6024A**	58CV(A,X)155–22	58500	11.2	13.5	59000	3.54	8.0	36000	2.56
3107140	25HPA560A30	CNPH*6024A**	58MEB080–16	57500	11.0	13.5	59000	3.40	7.7	36200	2.48
3107141	25HPA560A30	CNPH*6024A**	58MEB100–20	58000	11.2	13.5	59000	3.48	7.8	36000	2.52
3107142	25HPA560A30	CNPH*6024A**	58MEB120–20	58500	11.5	13.5	59000	3.52	7.8	35800	2.54
3016037	25HPA560A30	CNPH*6024A**	58PH*090–16	58000	11.2	13.5	59000	3.46	7.8	36200	2.50
3016038	25HPA560A30	CNPH*6024A**	58PH*110–20	58500	11.2	13.5	59000	3.52	7.8	36000	2.54
3016039	25HPA560A30	CNPH*6024A**	58PH*135–20	58500	11.2	13.5	59000	3.50	7.8	36000	2.52
904507	25HPA560A30	CNPH*6024A**+TDR		59000	11.0	13.2	60000	3.58	8.0	37000	2.54
905025	25HPA560A30	CNPV*6024A**	58CV(A,X)135–22	58500	11.2	13.5	59000	3.52	7.9	36000	2.54
906010	25HPA560A30	CNPV*6024A**	58CV(A,X)155–22	58500	11.2	13.5	59000	3.54	8.0	36000	2.56
3107139	25HPA560A30	CNPV*6024A**	58MEB120–20	58500	11.5	13.5	59000	3.50	7.8	35800	2.54
3016036	25HPA560A30	CNPV*6024A**	58PH*135–20	58500	11.2	13.5	59000	3.50	7.8	36000	2.52
904875	25HPA560A30	CNPV*6024A**+TDR		59000	11.0	13.2	60000	3.58	8.0	37000	2.54
905944	25HPA560A30	CSPH*6012A**	58CV(A,X)110–20	58500	11.2	13.5	58500	3.58	8.0	36400	2.54
905492	25HPA560A30	CSPH*6012A**	58CV(A,X)135–22	58500	11.2	13.5	58500	3.60	8.0	36000	2.56
904906	25HPA560A30	CSPH*6012A**	58CV(A,X)155–22	59000	11.2	13.5	58500	3.64	8.0	36000	2.58
3107143	25HPA560A30	CSPH*6012A**	58MEB080–16	58000	11.0	13.5	59000	3.48	7.8	36200	2.50
3107144	25HPA560A30	CSPH*6012A**	58MEB100–20	58500	11.5	13.5	59000	3.56	7.9	36000	2.56
3107145	25HPA560A30	CSPH*6012A**	58MEB120–20	59000	11.5	14.0	59000	3.60	8.0	36000	2.58
3016040	25HPA560A30	CSPH*6012A**	58PH*090–16	58500	11.2	13.5	59500	3.54	7.9	36200	2.54
3016041	25HPA560A30	CSPH*6012A**	58PH*110–20	59000	11.2	13.5	59500	3.62	8.1	36200	2.58
3016042	25HPA560A30	CSPH*6012A**	58PH*135–20	58500	11.2	13.5	59500	3.58	8.0	36200	2.56
903364	25HPA560A30	CSPH*6012A**+TDR		58500	11.0	13.2	60000	3.64	8.0	37200	2.56

† Tested combination.

Ratings are net values reflecting the effects of circulating fan heat. Supplemental electric heat is not included. Ratings are based on:

Cooling Standard: 80°F (27°C) db 67°F (19°C) wb indoor entering air temperature and 95°F (35°C) db air entering outdoor unit.

High–Temp Heating Standard: 70°F (21°C) db indoor entering air temperature and 47°F (8°C) db 43°F (6°C) wb air entering outdoor unit.

Low–Temp Heating Standard: 70°F (21°C) db indoor entering air temperature and 17°F (±9°C) db 15°F (±10°C) wb air entering outdoor unit.

SEER — Seasonal Energy Efficiency Ratio

COP — Coefficient of Performance

TDR — Time–Delay Relay

HSPF — Heating Seasonal Performance Factor

EER — Energy Efficiency Ratio

DETAILED COOLING CAPACITIES#

EVAPORATOR AIR		CONDENSER ENTERING AIR TEMPERATURES °F (°C)																	
		75 (23.9)			85 (29.4)			95 (35)			105 (40.6)			115 (46.1)			125 (51.7)		
CFM	EWB °F (°C)	Capacity MBtuh		Total Sys. KW**	Capacity MBtuh		Total Sys. KW**	Capacity MBtuh		Total Sys. KW**	Capacity MBtuh		Total Sys. KW**	Capacity MBtuh		Total Sys. KW**	Capacity MBtuh		Total Sys. KW**
		Total	Sens‡		Total	Sens‡		Total	Sens‡		Total	Sens‡		Total	Sens‡		Total	Sens‡	
25HPA518A30 Outdoor Section With FX4CNF018 Indoor Section																			
525	72 (22.2)	21.38	11.04	1.16	20.36	10.65	1.30	19.30	10.24	1.46	18.17	9.81	1.65	16.96	9.35	1.85	15.66	8.87	2.07
	67 (19.4)	19.39	13.53	1.16	18.44	13.12	1.31	17.45	12.70	1.47	16.40	12.26	1.65	15.28	11.79	1.85	14.07	11.29	2.07
	63 (17.2)††	17.97	13.07	1.17	17.08	12.65	1.32	16.14	12.22	1.48	15.14	11.78	1.66	14.08	11.30	1.86	12.95	10.80	2.08
	62 (16.7)	17.61	16.02	1.17	16.74	15.59	1.32	15.83	15.13	1.48	14.89	14.63	1.66	13.95	13.95	1.86	13.04	13.04	2.08
	57 (13.9)	16.98	16.98	1.17	16.29	16.29	1.32	15.56	15.56	1.48	14.79	14.79	1.66	13.95	13.95	1.86	13.04	13.04	2.08
600	72 (22.2)	21.85	11.59	1.17	20.79	11.18	1.31	19.68	10.77	1.48	18.51	10.33	1.66	17.26	9.87	1.86	15.91	9.38	2.08
	67 (19.4)	19.82	14.40	1.17	18.83	13.98	1.32	17.80	13.55	1.48	16.71	13.10	1.66	15.54	12.62	1.87	14.30	12.11	2.09
	63 (17.2)††	18.37	13.88	1.18	17.44	13.46	1.33	16.47	13.02	1.49	15.43	12.56	1.67	14.34	12.08	1.87	13.16	11.56	2.09
	62 (16.7)	18.04	17.17	1.18	17.15	16.70	1.33	16.22	16.22	1.49	15.38	15.38	1.67	14.50	14.50	1.87	13.54	13.54	2.09
	57 (13.9)	17.71	17.71	1.18	16.98	16.98	1.33	16.21	16.21	1.49	15.39	15.39	1.67	14.50	14.50	1.87	13.54	13.54	2.09
675	72 (22.2)	22.22	12.10	1.18	21.12	11.69	1.32	19.98	11.27	1.49	18.77	10.83	1.67	17.48	10.37	1.87	16.10	9.87	2.09
	67 (19.4)	20.16	15.23	1.18	19.14	14.80	1.33	18.07	14.36	1.49	16.95	13.90	1.68	15.75	13.41	1.88	14.48	12.88	2.10
	63 (17.2)††	18.69	14.65	1.19	17.73	14.23	1.34	16.72	13.78	1.50	15.66	13.31	1.68	14.54	12.81	1.88	13.34	12.27	2.10
	62 (16.7)	18.42	18.18	1.19	17.56	17.56	1.34	16.75	16.75	1.50	15.89	15.89	1.68	14.96	14.96	1.88	13.96	13.96	2.10
	57 (13.9)	18.33	18.33	1.19	17.56	17.56	1.34	16.75	16.75	1.50	15.89	15.89	1.68	14.96	14.96	1.88	13.96	13.96	2.10

COOLING INDOOR MODEL	CAPACITY	POWER	FURNACE MODEL
*FX4CNF018	1.00	1.00	
FE4ANF002	1.01	0.97	
FF1ENP018	0.98	1.08	
FF1ENP024	0.99	1.08	
FV4BNF002	1.01	0.97	
FX4CNF024	1.01	0.98	
FY4ANF018	0.98	1.09	
FY4ANF024	0.99	1.09	
CAP**1814A**	0.98	1.09	
CAP**2414A**	1.00	1.09	
CAP**2417A**	1.00	1.09	
CNPF*2418A**	0.99	1.10	
CNPH*2417A**	0.99	1.10	
CNPV*1814A**	0.98	1.09	
CNPV*2414A**	0.99	1.10	
CNPV*2417A**	0.99	1.10	
CSPH*2412A**	0.99	1.10	
CAP**1814A**	0.97	0.97	58CV(A,X)070–12
CAP**2414A**	0.99	0.99	58CV(A,X)070–12
CNPH*2417A**	0.99	0.99	58CV(A,X)070–12
CNPV*1814A**	0.97	0.97	58CV(A,X)070–12
CNPV*2414A**	0.99	0.99	58CV(A,X)070–12
CSPH*2412A**	0.99	0.99	58CV(A,X)070–12
CAP**2417A**	0.99	0.99	58CV(A,X)090–16
CNPH*2417A**	0.99	0.99	58CV(A,X)090–16
CNPV*2417A**	0.99	0.99	58CV(A,X)090–16
CSPH*2412A**	0.99	0.99	58CV(A,X)090–16
CAP**2417A**	1.01	0.97	58MEB040–12
CNPH*2417A**	1.01	0.97	58MEB040–12
CNPV*2417A**	1.01	0.97	58MEB040–12
CSPH*2412A**	1.01	0.97	58MEB040–12
CAP**2417A**	1.01	0.97	58MEB060–12
CNPH*2417A**	1.01	1.01	58MEB060–12
CNPV*2417A**	1.01	1.01	58MEB060–12
CSPH*2412A**	1.01	1.01	58MEB060–12
CNPH*2417A**	0.99	0.99	58MVB040–14
CSPH*2412A**	0.99	0.99	58MVB040–14
CAP**2417A**	0.99	0.99	58MVB060–14
CNPH*2417A**	0.99	0.99	58MVB060–14

COOLING INDOOR MODEL	CAPACITY	POWER	FURNACE MODEL
CNPV*2417A**	0.99	0.99	58MVB060–14
CSPH*2412A**	0.99	0.99	58MVB060–14
CNPH*2417A**	0.99	0.99	58MVB080–14
CSPH*2412A**	0.99	0.99	58MVB080–14
CAP**1814A**	0.99	0.99	58PH*045–08
CAP**2414A**	1.01	1.01	58PH*045–08
CNPH*2417A**	1.01	1.01	58PH*045–08
CNPV*1814A**	0.99	0.99	58PH*045–08
CNPV*2414A**	1.01	1.01	58PH*045–08
CSPH*2412A**	1.01	1.01	58PH*045–08

See notes on pg. 32

DETAILED COOLING CAPACITIES# CONTINUED

EVAPORATOR AIR		CONDENSER ENTERING AIR TEMPERATURES °F (°C)																	
		75 (23.9)			85 (29.4)			95 (35)			105 (40.6)			115 (46.1)			125 (51.7)		
CFM	EWB °F (°C)	Capacity MBtuh		Total Sys. KW**	Capacity MBtuh		Total Sys. KW**	Capacity MBtuh		Total Sys. KW**	Capacity MBtuh		Total Sys. KW**	Capacity MBtuh		Total Sys. KW**	Capacity MBtuh		Total Sys. KW**
		Total	Sens‡		Total	Sens‡		Total	Sens‡		Total	Sens‡		Total	Sens‡		Total	Sens‡	
25HPA524A30 Outdoor Section With FX4CNF030 Indoor Section																			
700	72 (22.2)	28.21	14.49	1.47	26.92	13.99	1.65	25.57	13.46	1.85	24.13	12.92	2.07	22.59	12.34	2.31	20.91	11.71	2.57
	67 (19.4)	25.60	17.78	1.46	24.41	17.26	1.64	23.15	16.72	1.84	21.81	16.16	2.06	20.38	15.56	2.30	18.81	14.91	2.56
	63 (17.2)††	23.74	17.18	1.46	22.61	16.65	1.64	21.42	16.11	1.84	20.16	15.53	2.06	18.80	14.92	2.29	17.33	14.27	2.55
	62 (16.7)	23.27	21.07	1.46	22.17	20.52	1.64	21.02	19.95	1.84	19.80	19.32	2.05	18.55	18.55	2.29	17.37	17.37	2.55
	57 (13.9)	22.41	22.41	1.46	21.53	21.53	1.64	20.61	20.61	1.83	19.62	19.62	2.05	18.55	18.55	2.29	17.37	17.37	2.55
800	72 (22.2)	28.81	15.19	1.49	27.47	14.68	1.67	26.06	14.14	1.87	24.57	13.59	2.09	22.97	13.00	2.33	21.24	12.37	2.59
	67 (19.4)	26.16	18.90	1.49	24.91	18.37	1.67	23.60	17.82	1.87	22.21	17.25	2.09	20.72	16.63	2.32	19.11	15.97	2.58
	63 (17.2)††	24.26	18.23	1.48	23.08	17.69	1.66	21.84	17.14	1.86	20.53	16.55	2.08	19.12	15.93	2.32	17.60	15.26	2.57
	62 (16.7)	23.82	22.56	1.48	22.69	21.98	1.66	21.53	21.32	1.86	20.39	20.39	2.08	19.26	19.26	2.32	18.02	18.02	2.58
	57 (13.9)	23.35	23.35	1.48	22.42	22.42	1.66	21.44	21.44	1.86	20.39	20.39	2.08	19.26	19.26	2.32	18.02	18.02	2.58
900	72 (22.2)	29.28	15.85	1.51	27.90	15.33	1.70	26.44	14.79	1.90	24.91	14.22	2.12	23.26	13.63	2.36	21.48	12.99	2.62
	67 (19.4)	26.58	19.97	1.51	25.29	19.43	1.69	23.94	18.87	1.89	22.51	18.28	2.11	20.98	17.66	2.35	19.34	16.98	2.60
	63 (17.2)††	24.66	19.22	1.50	23.44	18.68	1.68	22.17	18.11	1.88	20.82	17.52	2.10	19.37	16.88	2.34	17.82	16.18	2.59
	62 (16.7)	24.30	23.89	1.50	23.18	23.18	1.68	22.14	22.14	1.88	21.05	21.05	2.10	19.86	19.86	2.34	18.56	18.56	2.60
	57 (13.9)	24.15	24.15	1.50	23.18	23.18	1.68	22.15	22.15	1.88	21.05	21.05	2.10	19.86	19.86	2.34	18.57	18.57	2.60

COOLING INDOOR MODEL	CAPACITY	POWER	FURNACE MODEL
*FX4CNF030	1.00	1.00	
FE4ANF002	0.99	0.99	
FE4ANF003	0.99	0.95	
FF1ENP024	0.97	1.09	
FF1ENP030	0.97	1.09	
FV4BNF002	0.99	0.99	
FV4BNF003	0.99	0.95	
FX4CNF024	0.98	0.99	
FY4ANF024	0.97	1.06	
FY4ANF030	0.97	1.06	
CAP**2414A**	0.97	1.09	
CAP**2417A**	0.97	1.09	
CAP**3014A**	0.98	1.07	
CAP**3017A**	0.98	1.07	
CNPF*2418A**	0.97	1.09	
CNPH*2417A**	0.97	1.06	
CNPH*3017A**	0.98	1.07	
CNPV*2414A**	0.97	1.06	
CNPV*2417A**	0.97	1.09	
CNPV*3014A**	0.98	1.07	
CNPV*3017A**	0.98	1.07	
CSPH*2412A**	0.97	1.06	
CSPH*3012A**	0.98	1.07	
CAP**2414A**	0.97	0.97	58CV(A,X)070–12
CAP**3014A**	0.98	0.98	58CV(A,X)070–12
CNPH*2417A**	0.97	0.97	58CV(A,X)070–12
CNPH*3017A**	0.98	0.96	58CV(A,X)070–12
CNPV*2414A**	0.97	0.97	58CV(A,X)070–12
CNPV*3014A**	0.98	0.98	58CV(A,X)070–12
CSPH*2412A**	0.97	0.97	58CV(A,X)070–12
CSPH*3012A**	0.98	0.98	58CV(A,X)070–12
CAP**2417A**	0.97	0.97	58CV(A,X)090–16
CAP**3017A**	0.98	0.96	58CV(A,X)090–16
CNPH*2417A**	0.97	0.97	58CV(A,X)090–16
CNPH*3017A**	0.98	0.96	58CV(A,X)090–16
CNPV*2417A**	0.97	0.97	58CV(A,X)090–16
CNPV*3017A**	0.98	0.96	58CV(A,X)090–16
CSPH*2412A**	0.97	0.97	58CV(A,X)090–16
CSPH*3012A**	0.98	0.98	58CV(A,X)090–16

COOLING INDOOR MODEL	CAPACITY	POWER	FURNACE MODEL
CNPH*2417A**	0.97	0.97	58CV(A,X)110–20
CNPH*3017A**	0.98	0.96	58CV(A,X)110–20
CSPH*2412A**	0.97	0.97	58CV(A,X)110–20
CSPH*3012A**	0.98	0.98	58CV(A,X)110–20
CNPH*2417A**	0.97	0.97	58CV(A,X)135–22
CNPH*3017A**	0.98	0.96	58CV(A,X)135–22
CSPH*2412A**	0.97	0.97	58CV(A,X)135–22
CSPH*3012A**	0.98	0.98	58CV(A,X)135–22
CNPH*2417A**	0.97	0.97	58CV(A,X)155–22
CNPH*3017A**	0.98	0.96	58CV(A,X)155–22
CSPH*2412A**	0.97	0.97	58CV(A,X)155–22
CSPH*3012A**	0.98	0.98	58CV(A,X)155–22
CAP**2417A**	0.99	0.99	58MEB040–12
CAP**3017A**	1.01	1.01	58MEB040–12
CNPH*2417A**	0.98	0.98	58MEB040–12
CNPH*3017A**	1.01	1.01	58MEB040–12
CNPV*2417A**	0.98	0.98	58MEB040–12
CNPV*3017A**	1.01	1.01	58MEB040–12
CSPH*2412A**	0.99	0.99	58MEB040–12
CSPH*3012A**	1.01	1.01	58MEB040–12
CAP**2417A**	0.99	0.99	58MEB060–12
CAP**3017A**	1.01	1.01	58MEB060–12
CNPH*2417A**	0.98	0.98	58MEB060–12
CNPH*3017A**	1.01	1.01	58MEB060–12
CNPV*2417A**	0.98	0.98	58MEB060–12
CNPV*3017A**	1.01	1.01	58MEB060–12
CSPH*2412A**	1.00	1.00	58MEB060–12
CSPH*3012A**	1.01	1.01	58MEB060–12
CAP**2417A**	0.99	0.99	58MEB080–12
CAP**3017A**	1.00	1.00	58MEB080–12
CNPH*2417A**	0.98	0.98	58MEB080–12
CNPH*3017A**	1.00	1.00	58MEB080–12
CNPV*2417A**	0.98	0.98	58MEB080–12
CNPV*3017A**	1.00	1.00	58MEB080–12
CSPH*2412A**	0.99	0.99	58MEB080–12
CSPH*3012A**	1.00	1.00	58MEB080–12
CNPH*2417A**	0.97	1.02	58MVB040–14
CNPH*3017A**	0.98	0.98	58MVB040–14
CSPH*2412A**	0.97	1.02	58MVB040–14

COOLING INDOOR MODEL	CAPACITY	POWER	FURNACE MODEL
CSPH*3012A**	0.98	0.98	58MVB040–14
CAP**2417A**	0.97	0.97	58MVB060–14
CAP**3017A**	0.98	0.98	58MVB060–14
CNPH*2417A**	0.97	0.97	58MVB060–14
CNPH*3017A**	0.98	0.96	58MVB060–14
CNPV*2417A**	0.97	0.97	58MVB060–14
CNPV*3017A**	0.98	0.96	58MVB060–14
CSPH*2412A**	0.97	0.97	58MVB060–14
CSPH*3012A**	0.98	0.98	58MVB060–14
CNPH*2417A**	0.97	0.97	58MVB080–14
CNPH*3017A**	0.98	0.96	58MVB080–14
CSPH*2412A**	0.97	0.97	58MVB080–14
CSPH*3012A**	0.98	0.98	58MVB080–14
CNPH*2417A**	0.97	0.97	58MVB080–20
CNPH*3017A**	0.98	0.96	58MVB080–20
CSPH*2412A**	0.97	0.97	58MVB080–20
CSPH*3012A**	0.98	0.98	58MVB080–20
CNPH*2417A**	0.97	0.97	58MVB100–20
CNPH*3017A**	0.98	0.96	58MVB100–20
CSPH*2412A**	0.97	0.97	58MVB100–20
CSPH*3012A**	0.98	0.98	58MVB100–20
CNPH*2417A**	0.97	1.01	58MVB120–20
CNPH*3017A**	0.98	0.96	58MVB120–20
CSPH*2412A**	0.97	0.97	58MVB120–20
CSPH*3012A**	0.98	0.98	58MVB120–20
CAP**2414A**	0.97	1.02	58PH*045–08
CAP**3014A**	0.97	0.97	58PH*045–08
CNPH*2417A**	0.97	1.01	58PH*045–08
CNPH*3017A**	0.98	0.98	58PH*045–08
CNPV*2414A**	0.97	1.01	58PH*045–08
CNPV*3014A**	0.98	0.98	58PH*045–08
CSPH*2412A**	0.97	0.97	58PH*045–08
CSPH*3012A**	0.99	0.99	58PH*045–08

See notes on pg. 32

DETAILED COOLING CAPACITIES# CONTINUED

EVAPORATOR AIR		CONDENSER ENTERING AIR TEMPERATURES °F (°C)																	
		75 (23.9)			85 (29.4)			95 (35)			105 (40.6)			115 (46.1)			125 (51.7)		
CFM	EWB °F (°C)	Capacity MBtuh		Total Sys. KW**	Capacity MBtuh		Total Sys. KW**	Capacity MBtuh		Total Sys. KW**	Capacity MBtuh		Total Sys. KW**	Capacity MBtuh		Total Sys. KW**	Capacity MBtuh		Total Sys. KW**
		Total	Sens‡		Total	Sens‡		Total	Sens‡		Total	Sens‡		Total	Sens‡		Total	Sens‡	
25HPA530A30 Outdoor Section With FX4CNF030 Indoor Section																			
875	72 (22.2)	34.91	18.12	1.82	33.33	17.51	2.03	31.67	16.87	2.26	29.90	16.20	2.52	27.99	15.49	2.79	25.91	14.73	3.10
	67 (19.4)	31.70	22.36	1.82	30.24	21.73	2.03	28.70	21.07	2.26	27.06	20.38	2.51	25.29	19.65	2.79	23.36	18.86	3.09
	63 (17.2)††	29.41	21.58	1.82	28.03	20.95	2.03	26.58	20.29	2.26	25.03	19.59	2.51	23.37	18.85	2.79	21.55	18.05	3.09
	62 (16.7)	28.84	26.56	1.82	27.51	25.89	2.03	26.12	25.17	2.26	24.66	24.35	2.51	23.21	23.21	2.79	21.75	21.75	3.09
	57 (13.9)	27.97	27.97	1.82	26.90	26.90	2.03	25.76	25.76	2.26	24.54	24.54	2.51	23.22	23.22	2.79	21.75	21.75	3.09
1000	72 (22.2)	35.59	18.98	1.85	33.96	18.36	2.06	32.23	17.71	2.29	30.39	17.04	2.54	28.42	16.32	2.82	26.26	15.54	3.12
	67 (19.4)	32.32	23.74	1.85	30.80	23.11	2.05	29.20	22.44	2.28	27.50	21.74	2.54	25.68	20.99	2.82	23.69	20.17	3.12
	63 (17.2)††	29.99	22.89	1.85	28.56	22.24	2.05	27.05	21.57	2.28	25.45	20.86	2.54	23.74	20.10	2.81	21.87	19.27	3.12
	62 (16.7)	29.49	28.37	1.85	28.14	27.62	2.05	26.75	26.75	2.28	25.44	25.44	2.54	24.05	24.05	2.81	22.51	22.51	3.12
	57 (13.9)	29.07	29.07	1.84	27.94	27.94	2.05	26.74	26.74	2.28	25.45	25.45	2.54	24.05	24.05	2.81	22.51	22.51	3.12
1125	72 (22.2)	36.14	19.81	1.88	34.45	19.17	2.08	32.66	18.52	2.31	30.77	17.84	2.57	28.74	17.11	2.85	26.53	16.32	3.15
	67 (19.4)	32.82	25.09	1.87	31.25	24.44	2.08	29.59	23.76	2.31	27.85	23.04	2.57	25.98	22.26	2.84	23.95	21.41	3.15
	63 (17.2)††	30.46	24.15	1.87	28.98	23.49	2.08	27.43	22.80	2.31	25.78	22.07	2.56	24.03	21.28	2.84	22.12	20.41	3.14
	62 (16.7)	30.05	30.05	1.87	28.81	28.81	2.08	27.55	27.55	2.31	26.20	26.20	2.56	24.74	24.74	2.84	23.13	23.13	3.14
	57 (13.9)	30.01	30.01	1.87	28.82	28.82	2.08	27.56	27.56	2.31	26.21	26.21	2.56	24.75	24.75	2.84	23.14	23.14	3.14

Cooling Indoor Model	Capacity	Power	Furnace Model
*FX4CNF030	1.00	1.00	
FE4ANF002	0.99	0.98	
FE4ANF003	0.99	0.96	
FE4ANF005	1.03	0.97	
FF1ENP030	0.98	1.09	
FF1ENP036	0.99	1.06	
FV4BNF002	0.99	0.98	
FV4BNF003	1.00	0.98	
FV4BNF005	1.03	0.97	
FX4CN(B,F)036	1.01	1.03	
FY4ANF030	0.99	1.10	
FY4ANF036	0.99	1.10	
CAP**3014A**	0.99	1.11	
CAP**3017A**	0.99	1.11	
CAP**3614A**	0.96	1.02	
CAP**3617A**	0.99	1.06	
CAP**3621A**	0.99	1.06	
CNPF*3618A**	0.99	1.06	
CNPH*3017A**	0.99	1.06	
CNPH*3617A**	0.99	1.06	
CNPV*3014A**	0.99	1.06	
CNPV*3017A**	0.99	1.06	
CNPV*3617A**	0.99	1.06	
CNPV*3621A**	0.99	1.06	
CSPH*3012A**	0.99	1.06	
CSPH*3612A**	0.99	1.06	
CAP**3014A**	0.99	1.01	58CV(A,X)070–12
CAP**3614A**	0.95	0.97	58CV(A,X)070–12
CNPH*3017A**	0.99	1.01	58CV(A,X)070–12
CNPH*3617A**	0.99	1.01	58CV(A,X)070–12
CNPV*3014A**	0.99	1.01	58CV(A,X)070–12
CSPH*3012A**	0.99	0.98	58CV(A,X)070–12
CSPH*3612A**	0.99	0.97	58CV(A,X)070–12
CAP**3017A**	0.99	0.97	58CV(A,X)090–16
CAP**3617A**	0.99	0.98	58CV(A,X)090–16
CNPH*3017A**	0.99	0.97	58CV(A,X)090–16
CNPH*3617A**	0.99	0.97	58CV(A,X)090–16
CNPV*3017A**	0.99	0.97	58CV(A,X)090–16
CNPV*3617A**	0.99	0.97	58CV(A,X)090–16

Cooling Indoor Model	Capacity	Power	Furnace Model
CSPH*3012A**	0.99	0.97	58CV(A,X)090–16
CSPH*3612A**	0.99	0.97	58CV(A,X)090–16
CAP**3621A**	0.99	0.98	58CV(A,X)110–20
CNPH*3017A**	0.99	0.98	58CV(A,X)110–20
CNPH*3617A**	0.99	0.98	58CV(A,X)110–20
CNPV*3621A**	0.99	0.98	58CV(A,X)110–20
CSPH*3012A**	0.99	0.98	58CV(A,X)110–20
CSPH*3612A**	0.99	0.98	58CV(A,X)110–20
CNPH*3017A**	0.99	0.98	58CV(A,X)135–22
CNPH*3617A**	0.99	0.98	58CV(A,X)135–22
CSPH*3012A**	0.99	0.98	58CV(A,X)135–22
CSPH*3612A**	0.99	0.98	58CV(A,X)135–22
CNPH*3017A**	0.99	0.98	58CV(A,X)155–22
CNPH*3617A**	0.99	0.98	58CV(A,X)155–22
CSPH*3012A**	0.99	0.98	58CV(A,X)155–22
CSPH*3612A**	0.99	0.98	58CV(A,X)155–22
CAP**3017A**	1.00	0.98	58MEB040–12
CAP**3617A**	1.01	0.99	58MEB040–12
CNPH*3017A**	1.00	0.98	58MEB040–12
CNPH*3617A**	1.00	0.98	58MEB040–12
CNPV*3017A**	1.00	0.98	58MEB040–12
CNPV*3617A**	1.00	0.98	58MEB040–12
CSPH*3012A**	1.00	0.98	58MEB040–12
CSPH*3612A**	1.02	1.00	58MEB040–12
CAP**3017A**	1.00	0.98	58MEB060–12
CAP**3617A**	1.01	0.99	58MEB060–12
CNPH*3017A**	1.00	0.98	58MEB060–12
CNPH*3617A**	1.00	0.98	58MEB060–12
CNPV*3017A**	1.00	0.98	58MEB060–12
CNPV*3617A**	1.00	0.98	58MEB060–12
CSPH*3012A**	1.00	0.98	58MEB060–12
CSPH*3612A**	1.03	1.01	58MEB060–12
CAP**3017A**	1.00	0.98	58MEB080–12
CAP**3617A**	1.00	0.98	58MEB080–12
CNPH*3017A**	1.00	0.98	58MEB080–12
CNPH*3617A**	1.00	0.98	58MEB080–12
CNPV*3017A**	1.00	0.98	58MEB080–12
CNPV*3617A**	1.00	0.98	58MEB080–12
CSPH*3012A**	1.00	0.98	58MEB080–12

Cooling Indoor Model	Capacity	Power	Furnace Model
CSPH*3612A**	1.02	1.00	58MEB080–12
CAP**3017A**	1.01	0.99	58MEB080–16
CAP**3617A**	1.01	0.99	58MEB080–16
CNPH*3017A**	1.01	0.99	58MEB080–16
CNPH*3617A**	1.01	0.99	58MEB080–16
CNPV*3017A**	1.01	0.99	58MEB080–16
CNPV*3617A**	1.01	0.99	58MEB080–16
CSPH*3012A**	1.01	0.99	58MEB080–16
CSPH*3612A**	1.03	1.01	58MEB080–16
CNPH*3017A**	0.99	1.01	58MVB040–14
CNPH*3617A**	0.99	1.01	58MVB040–14
CSPH*3012A**	0.99	1.01	58MVB040–14
CSPH*3612A**	0.99	1.01	58MVB040–14
CAP**3017A**	0.99	0.97	58MVB060–14
CAP**3617A**	0.99	0.97	58MVB060–14
CNPH*3017A**	0.99	0.97	58MVB060–14
CNPH*3617A**	0.99	0.97	58MVB060–14
CNPV*3017A**	0.99	0.97	58MVB060–14
CNPV*3617A**	0.99	0.97	58MVB060–14
CSPH*3012A**	0.99	1.01	58MVB060–14
CSPH*3612A**	0.99	0.97	58MVB060–14
CAP**3621A**	0.99	0.98	58MVB080–14
CNPH*3017A**	0.99	1.01	58MVB080–14
CNPH*3617A**	0.99	1.01	58MVB080–14
CNPV*3621A**	0.99	1.01	58MVB080–14
CSPH*3012A**	0.99	1.01	58MVB080–14
CSPH*3612A**	0.99	0.97	58MVB080–14
CAP**3621A**	0.99	0.98	58MVB080–20
CNPH*3017A**	0.99	0.97	58MVB080–20
CNPH*3617A**	0.99	0.97	58MVB080–20
CNPV*3621A**	0.99	0.97	58MVB080–20
CSPH*3012A**	0.99	0.97	58MVB080–20
CSPH*3612A**	0.99	0.97	58MVB080–20
CAP**3621A**	0.99	0.98	58MVB100–20
CNPH*3017A**	0.99	0.97	58MVB100–20
CNPH*3617A**	0.99	0.97	58MVB100–20
CNPV*3621A**	0.99	0.97	58MVB100–20
CSPH*3012A**	0.99	0.97	58MVB100–20
CSPH*3612A**	0.99	0.98	58MVB100–20

DETAILED COOLING CAPACITIES# CONTINUED

25HPA530A30 Outdoor Section With FX4CNF030 Indoor Section

Cooling Indoor Model	Capacity	Power	Furnace Model
CNPH*3017A**	0.99	0.97	58MVB120–20
CNPH*3617A**	0.99	0.97	58MVB120–20
CSPH*3012A**	0.99	0.97	58MVB120–20
CSPH*3612A**	0.99	0.98	58MVB120–20
CAP**3017A**	0.99	1.02	58PH*070–16
CAP**3617A**	0.99	1.02	58PH*070–16
CNPH*3017A**	0.99	1.02	58PH*070–16
CNPH*3617A**	0.99	1.02	58PH*070–16
CNPV*3017A**	0.99	1.02	58PH*070–16
CNPV*3617A**	0.99	1.02	58PH*070–16
CSPH*3012A**	0.99	1.02	58PH*070–16
CSPH*3612A**	1.01	1.00	58PH*070–16
CAP**3621A**	1.00	0.98	58PH*090–16
CNPH*3017A**	0.99	0.98	58PH*090–16
CNPH*3617A**	0.99	0.98	58PH*090–16
CNPV*3621A**	0.99	0.98	58PH*090–16
CSPH*3012A**	0.99	0.98	58PH*090–16
CSPH*3612A**	1.02	1.00	58PH*090–16

See notes on pg. 32

DETAILED COOLING CAPACITIES# CONTINUED

EVAPORATOR AIR		CONDENSER ENTERING AIR TEMPERATURES °F (°C)																	
		75 (23.9)			85 (29.4)			95 (35)			105 (40.6)			115 (46.1)			125 (51.7)		
CFM	EWB °F (°C)	Capacity MBtuh		Total Sys. KW**	Capacity MBtuh		Total Sys. KW**	Capacity MBtuh		Total Sys. KW**	Capacity MBtuh		Total Sys. KW**	Capacity MBtuh		Total Sys. KW**	Capacity MBtuh		Total Sys. KW**
		Total	Sens‡		Total	Sens‡		Total	Sens‡		Total	Sens‡		Total	Sens‡		Total	Sens‡	
25HPA536A Outdoor Section With FX4CN(F,B)042 Indoor Section																			
1050	72 (22.2)	42.80	21.81	2.30	40.87	21.06	2.55	38.83	20.29	2.84	36.68	19.48	3.16	34.36	18.62	3.50	31.83	17.70	3.87
	67 (19.4)	38.84	26.87	2.28	37.05	26.11	2.54	35.16	25.31	2.82	33.16	24.48	3.14	31.00	23.59	3.48	28.66	22.63	3.85
	63 (17.2)††	36.02	25.95	2.27	34.33	25.18	2.53	32.55	24.38	2.81	30.66	23.53	3.12	28.63	22.64	3.46	26.42	21.67	3.83
	62 (16.7)	35.31	31.94	2.27	33.67	31.13	2.52	31.95	30.27	2.81	30.15	29.33	3.12	28.34	28.34	3.46	26.57	26.57	3.83
	57 (13.9)	34.14	34.14	2.26	32.83	32.83	2.52	31.44	31.44	2.80	29.96	29.96	3.12	28.35	28.35	3.46	26.57	26.57	3.83
1200	72 (22.2)	43.67	22.86	2.34	41.65	22.10	2.60	39.54	21.31	2.88	37.31	20.49	3.20	34.91	19.62	3.54	32.29	18.68	3.91
	67 (19.4)	39.63	28.57	2.32	37.77	27.79	2.58	35.80	26.98	2.86	33.72	26.13	3.18	31.49	25.22	3.52	29.07	24.24	3.89
	63 (17.2)††	36.76	27.54	2.31	35.00	26.76	2.57	33.15	25.94	2.85	31.19	25.08	3.16	29.10	24.16	3.50	26.81	23.16	3.87
	62 (16.7)	36.12	34.19	2.31	34.43	33.30	2.56	32.69	32.69	2.85	31.10	31.10	3.16	29.40	29.40	3.51	27.52	27.52	3.88
	57 (13.9)	35.54	35.54	2.30	34.15	34.15	2.56	32.67	32.67	2.85	31.10	31.10	3.16	29.40	29.40	3.51	27.53	27.53	3.88
1350	72 (22.2)	44.35	23.85	2.38	42.26	23.08	2.64	40.08	22.28	2.92	37.78	21.45	3.24	35.31	20.57	3.58	32.62	19.62	3.96
	67 (19.4)	40.24	30.19	2.36	38.30	29.40	2.62	36.28	28.57	2.90	34.15	27.70	3.22	31.86	26.77	3.56	29.38	25.76	3.93
	63 (17.2)††	37.33	29.06	2.35	35.51	28.25	2.61	33.61	27.42	2.89	31.59	26.54	3.20	29.44	25.59	3.55	27.11	24.56	3.91
	62 (16.7)	36.84	36.54	2.35	35.25	35.25	2.61	33.71	33.71	2.89	32.06	32.06	3.21	30.27	30.27	3.55	28.31	28.31	3.92
	57 (13.9)	36.72	36.72	2.35	35.25	35.25	2.61	33.71	33.71	2.89	32.06	32.06	3.21	30.28	30.28	3.55	28.32	28.32	3.92

COOLING INDOOR MODEL	CAPACITY	POWER	FURNACE MODEL
*FX4CN(B,F)042	1.00	1.00	
FE4ANB006	1.01	0.97	
FE4ANF002	0.97	0.97	
FE4ANF003	0.97	0.96	
FE4ANF005	1.01	0.97	
FF1ENP036	0.97	1.08	
FV4BNB006	1.01	0.97	
FV4BNF002	0.97	0.97	
FV4BNF003	0.97	0.96	
FV4BNF005	1.01	0.97	
FX4CN(B,F)036	0.98	1.02	
FY4ANF036	0.97	1.08	
FY4ANF042	0.98	1.06	
CAP**3614A**	0.94	1.02	
CAP**3617A**	0.97	1.05	
CAP**3621A**	0.97	1.05	
CAP**4221A**	0.98	1.06	
CAP**4224A**	0.98	1.06	
CNPF*3618A**	0.97	1.08	
CNPH*3617A**	0.97	1.05	
CNPH*4221A**	0.98	1.06	
CNPV*3617A**	0.97	1.05	
CNPV*3621A**	0.97	1.05	
CNPV*4217A**	0.99	1.07	
CNPV*4221A**	0.98	1.06	
CSPH*3612A**	0.97	1.05	
CSPH*4212A**	0.98	1.02	
CAP**3614A**	0.93	0.97	58CV(A,X)070–12
CNPH*3617A**	0.96	1.00	58CV(A,X)070–12
CNPH*4221A**	0.97	0.95	58CV(A,X)070–12
CSPH*3612A**	0.97	0.97	58CV(A,X)070–12
CSPH*4212A**	0.97	0.97	58CV(A,X)070–12
CAP**3617A**	0.96	0.96	58CV(A,X)090–16
CNPH*3617A**	0.96	0.96	58CV(A,X)090–16
CNPH*4221A**	0.97	0.93	58CV(A,X)090–16
CNPV*3617A**	0.96	0.96	58CV(A,X)090–16
CNPV*4217A**	0.98	0.98	58CV(A,X)090–16
CSPH*3612A**	0.97	0.95	58CV(A,X)090–16
CSPH*4212A**	0.97	0.97	58CV(A,X)090–16

COOLING INDOOR MODEL	CAPACITY	POWER	FURNACE MODEL
CAP**3621A**	0.97	0.95	58CV(A,X)110–20
CAP**4221A**	0.97	0.96	58CV(A,X)110–20
CNPH*3617A**	0.96	0.96	58CV(A,X)110–20
CNPH*4221A**	0.97	0.93	58CV(A,X)110–20
CNPV*3621A**	0.96	0.96	58CV(A,X)110–20
CNPV*4221A**	0.97	0.96	58CV(A,X)110–20
CSPH*3612A**	0.97	0.95	58CV(A,X)110–20
CSPH*4212A**	0.97	0.97	58CV(A,X)110–20
CAP**4224A**	0.97	0.96	58CV(A,X)135–22
CNPH*3617A**	0.96	0.96	58CV(A,X)135–22
CNPH*4221A**	0.97	0.93	58CV(A,X)135–22
CSPH*3612A**	0.97	0.97	58CV(A,X)135–22
CSPH*4212A**	0.97	0.97	58CV(A,X)135–22
CAP**4224A**	0.98	0.94	58CV(A,X)155–22
CNPH*3617A**	0.97	0.97	58CV(A,X)155–22
CNPH*4221A**	0.97	0.93	58CV(A,X)155–22
CSPH*3612A**	0.97	0.97	58CV(A,X)155–22
CSPH*4212A**	0.98	0.94	58CV(A,X)155–22
CAP**3617A**	0.97	0.97	58MEB040–12
CNPH*3617A**	0.97	0.97	58MEB040–12
CNPH*4221A**	0.98	0.98	58MEB040–12
CNPV*3617A**	0.97	0.97	58MEB040–12
CNPV*4217A**	0.99	0.99	58MEB040–12
CSPH*3612A**	0.99	0.99	58MEB040–12
CSPH*4212A**	1.00	1.00	58MEB040–12
CAP**3617A**	0.97	0.97	58MEB060–12
CNPH*3617A**	0.97	1.01	58MEB060–12
CNPH*4221A**	0.98	0.98	58MEB060–12
CNPV*3617A**	0.97	1.01	58MEB060–12
CNPV*4217A**	0.99	0.99	58MEB060–12
CSPH*3612A**	0.99	0.99	58MEB060–12
CSPH*4212A**	1.00	1.00	58MEB060–12
CAP**3617A**	0.97	0.97	58MEB080–12
CNPH*3617A**	0.97	1.01	58MEB080–12
CNPH*4221A**	0.98	0.98	58MEB080–12
CNPV*3617A**	0.97	0.97	58MEB080–12
CNPV*4217A**	0.98	0.98	58MEB080–12
CSPH*3612A**	0.99	0.99	58MEB080–12
CSPH*4212A**	1.00	1.00	58MEB080–12

COOLING INDOOR MODEL	CAPACITY	POWER	FURNACE MODEL
CAP**3617A**	0.97	0.97	58MEB080–16
CNPH*3617A**	0.97	1.01	58MEB080–16
CNPH*4221A**	0.98	0.98	58MEB080–16
CNPV*3617A**	0.97	1.01	58MEB080–16
CNPV*4217A**	0.99	0.99	58MEB080–16
CSPH*3612A**	0.99	0.99	58MEB080–16
CSPH*4212A**	1.00	1.00	58MEB080–16
CAP**3621A**	0.97	0.97	58MEB100–20
CAP**4221A**	0.98	0.98	58MEB100–20
CNPH*3617A**	0.96	0.96	58MEB100–20
CNPH*4221A**	0.98	0.98	58MEB100–20
CNPV*3621A**	0.96	0.96	58MEB100–20
CNPV*4221A**	0.98	0.98	58MEB100–20
CSPH*3612A**	0.99	0.99	58MEB100–20
CSPH*4212A**	0.99	0.99	58MEB100–20
CNPV*4217A**	0.98	0.98	58MV(B,C)060–14
CAP**4224A**	0.97	0.97	58MVB040–14
CNPH*3617A**	0.96	1.00	58MVB040–14
CNPH*4221A**	0.97	0.95	58MVB040–14
CSPH*3612A**	0.97	0.97	58MVB040–14
CSPH*4212A**	0.97	0.97	58MVB040–14
CAP**3617A**	0.96	0.96	58MVB060–14
CNPH*3617A**	0.96	1.00	58MVB060–14
CNPH*4221A**	0.97	0.96	58MVB060–14
CNPV*3617A**	0.96	1.00	58MVB060–14
CSPH*3612A**	0.96	0.95	58MVB060–14
CSPH*4212A**	0.97	0.97	58MVB060–14
CAP**3621A**	0.96	1.00	58MVB080–14
CAP**4221A**	0.97	0.97	58MVB080–14
CNPH*3617A**	0.96	1.00	58MVB080–14
CNPH*4221A**	0.97	0.96	58MVB080–14
CNPV*3621A**	0.96	1.00	58MVB080–14
CNPV*4221A**	0.97	0.95	58MVB080–14
CSPH*3612A**	0.96	0.96	58MVB080–14
CSPH*4212A**	0.97	0.97	58MVB080–14
CAP**3621A**	0.96	0.96	58MVB080–20
CAP**4221A**	0.97	0.97	58MVB080–20
CNPH*3617A**	0.96	1.00	58MVB080–20
CNPH*4221A**	0.97	0.96	58MVB080–20

DETAILED COOLING CAPACITIES# CONTINUED

25HPA536A Outdoor Section With FX4CN(F,B)042 Indoor Section

COOLING INDOOR MODEL	CAPACITY	POWER	FURNACE MODEL
CNPV*3621A**	0.96	1.00	58MVB080–20
CNPV*4221A**	0.97	0.96	58MVB080–20
CSPH*3612A**	0.96	0.95	58MVB080–20
CSPH*4212A**	0.97	0.97	58MVB080–20
CAP**3621A**	0.96	0.96	58MVB100–20
CAP**4221A**	0.97	0.96	58MVB100–20
CNPH*3617A**	0.96	1.00	58MVB100–20
CNPH*4221A**	0.97	0.96	58MVB100–20
CNPV*3621A**	0.96	0.96	58MVB100–20
CNPV*4221A**	0.97	0.96	58MVB100–20
CSPH*3612A**	0.97	0.95	58MVB100–20
CSPH*4212A**	0.97	0.97	58MVB100–20
CAP**4224A**	0.97	0.96	58MVB120–20
CNPH*3617A**	0.96	0.96	58MVB120–20
CNPH*4221A**	0.97	0.96	58MVB120–20
CSPH*3612A**	0.97	0.95	58MVB120–20
CSPH*4212A**	0.97	0.97	58MVB120–20
CAP**3614A**	0.96	1.04	58PH*045–08
CNPH*3617A**	0.96	1.04	58PH*045–08
CNPH*4221A**	0.97	1.05	58PH*045–08
CSPH*3612A**	0.98	1.02	58PH*045–08
CSPH*4212A**	0.99	1.03	58PH*045–08
CAP**3617A**	0.96	1.00	58PH*070–16
CNPH*3617A**	0.96	1.00	58PH*070–16
CNPH*4221A**	0.97	1.01	58PH*070–16
CNPV*3617A**	0.96	1.00	58PH*070–16
CNPV*4217A**	0.98	1.02	58PH*070–16
CSPH*3612A**	0.98	1.02	58PH*070–16
CSPH*4212A**	0.99	0.99	58PH*070–16
CAP**3621A**	0.98	0.98	58PH*090–16
CAP**4221A**	0.98	0.98	58PH*090–16
CNPH*3617A**	0.97	0.97	58PH*090–16
CNPH*4221A**	0.98	0.98	58PH*090–16
CNPV*3621A**	0.97	0.97	58PH*090–16
CNPV*4221A**	0.98	0.98	58PH*090–16
CSPH*3612A**	0.99	0.99	58PH*090–16
CSPH*4212A**	1.00	1.00	58PH*090–16
CAP**3621A**	0.98	0.98	58PH*110–20
CAP**4221A**	0.98	0.98	58PH*110–20
CNPH*3617A**	0.97	0.97	58PH*110–20
CNPH*4221A**	0.98	0.98	58PH*110–20
CNPV*3621A**	0.97	0.97	58PH*110–20
CNPV*4221A**	0.98	0.98	58PH*110–20
CSPH*3612A**	0.99	0.99	58PH*110–20
CSPH*4212A**	1.01	1.01	58PH*110–20

See notes on pg. 32

DETAILED COOLING CAPACITIES# CONTINUED

EVAPORATOR AIR		CONDENSER ENTERING AIR TEMPERATURES °F (°C)																	
		75 (23.9)			85 (29.4)			95 (35)			105 (40.6)			115 (46.1)			125 (51.7)		
CFM	EWB °F (°C)	Capacity MBtuh		Total Sys. KW**	Capacity MBtuh		Total Sys. KW**	Capacity MBtuh		Total Sys. KW**	Capacity MBtuh		Total Sys. KW**	Capacity MBtuh		Total Sys. KW**	Capacity MBtuh		Total Sys. KW**
		Total	Sens‡		Total	Sens‡		Total	Sens‡		Total	Sens‡		Total	Sens‡		Total	Sens‡	
25HPA442A Outdoor Section With FX4CN(F,B)048 Indoor Section																			
1225	72 (22.2)	50.27	25.62	2.49	47.82	24.66	2.88	45.23	23.67	3.27	42.52	22.65	3.68	39.66	21.59	4.09	36.54	20.44	4.52
	67 (19.4)	45.90	31.64	2.58	43.65	30.66	2.95	41.30	29.66	3.33	38.84	28.63	3.72	36.25	27.56	4.12	33.43	26.40	4.53
	63 (17.2)††	42.67	30.61	2.63	40.58	29.65	2.99	38.41	28.66	3.36	36.14	27.63	3.74	33.74	26.57	4.13	31.15	25.42	4.53
	62 (16.7)	41.82	37.60	2.64	39.78	36.60	3.00	37.69	35.56	3.36	35.51	34.46	3.74	33.30	33.30	4.13	31.18	31.18	4.53
	57 (13.9)	40.27	40.27	2.67	38.66	38.66	3.01	36.99	36.99	3.37	35.20	35.20	3.74	33.29	33.29	4.13	31.18	31.18	4.53
1400	72 (22.2)	51.21	26.81	2.51	48.66	25.85	2.90	45.95	24.84	3.30	43.14	23.80	3.71	40.16	22.71	4.13	36.93	21.55	4.56
	67 (19.4)	46.81	33.62	2.60	44.46	32.63	2.98	42.00	31.61	3.36	39.44	30.55	3.76	36.75	29.45	4.16	33.83	28.26	4.57
	63 (17.2)††	43.57	32.49	2.66	41.38	31.50	3.02	39.10	30.49	3.40	36.74	29.44	3.78	34.24	28.34	4.17	31.55	27.17	4.57
	62 (16.7)	42.77	40.30	2.67	40.67	39.22	3.03	38.53	38.26	3.40	36.51	36.51	3.78	34.46	34.46	4.17	32.20	32.20	4.57
	57 (13.9)	41.96	41.96	2.68	40.23	40.23	3.04	38.42	38.42	3.40	36.51	36.51	3.78	34.46	34.46	4.17	32.20	32.20	4.57
1575	72 (22.2)	51.91	27.94	2.54	49.29	26.97	2.93	46.48	25.95	3.34	43.58	24.90	3.75	40.52	23.80	4.17	39.71	23.51	4.09
	67 (19.4)	47.50	35.52	2.63	45.06	34.51	3.01	42.52	33.47	3.40	39.88	32.39	3.79	37.10	31.26	4.20	34.11	30.04	4.62
	63 (17.2)††	44.25	34.28	2.69	41.97	33.27	3.06	39.62	32.23	3.43	37.18	31.15	3.82	34.61	30.03	4.22	31.85	28.81	4.62
	62 (16.7)	43.59	42.72	2.70	41.53	41.53	3.06	39.61	39.61	3.43	37.58	37.58	3.82	35.41	35.41	4.21	33.01	33.01	4.62
	57 (13.9)	43.37	43.37	2.70	41.53	41.53	3.06	39.61	39.61	3.43	37.58	37.58	3.82	35.41	35.41	4.21	33.02	33.02	4.62

COOLING INDOOR MODEL	CAPACITY	POWER	FURNACE MODEL
*FX4CN(B,F)048	1.00	1.00	
FE4ANB006	1.00	0.96	
FE4ANF003	0.96	1.00	
FE4ANF005	1.00	1.00	
FV4BNB006	1.00	0.96	
FV4BNF003	0.96	1.05	
FV4BNF005	1.00	1.00	
FX4CN(B,F)042	1.00	1.04	
FY4ANF042	0.99	1.10	
FY4ANF048	1.00	1.09	
CAP**4221A**	0.98	1.09	
CAP**4224A**	0.98	1.09	
CAP**4817A**	0.96	1.05	
CAP**4821A**	0.99	1.07	
CAP**4824A**	0.99	1.07	
CNPF*4818A**	0.96	1.08	
CNPH*4221A**	0.98	1.09	
CNPH*4821A**	0.99	1.07	
CNPV*4217A**	0.99	1.07	
CNPV*4221A**	0.98	1.09	
CNPV*4821A**	0.99	1.07	
CNPV*4824A**	0.99	1.07	
CSPH*4212A**	0.98	1.06	
CSPH*4812A**	0.99	1.07	
CNPH*4221A**	0.96	1.00	58CV(A,X)070–12
CNPH*4821A**	0.98	1.02	58CV(A,X)070–12
CSPH*4212A**	0.96	1.00	58CV(A,X)070–12
CSPH*4812A**	0.98	1.02	58CV(A,X)070–12
CAP**4817A**	0.95	0.99	58CV(A,X)090–16
CNPH*4221A**	0.96	1.00	58CV(A,X)090–16
CNPH*4821A**	0.98	1.02	58CV(A,X)090–16
CNPV*4217A**	0.98	1.02	58CV(A,X)090–16
CSPH*4212A**	0.96	1.00	58CV(A,X)090–16
CSPH*4812A**	0.98	1.02	58CV(A,X)090–16
CAP**4221A**	0.96	1.00	58CV(A,X)110–20
CAP**4821A**	0.99	1.03	58CV(A,X)110–20
CNPH*4221A**	0.98	1.02	58CV(A,X)110–20
CNPH*4821A**	0.99	1.03	58CV(A,X)110–20
CNPV*4221A**	0.98	1.02	58CV(A,X)110–20

COOLING INDOOR MODEL	CAPACITY	POWER	FURNACE MODEL
CNPV*4821A**	0.99	1.03	58CV(A,X)110–20
CSPH*4212A**	0.98	1.02	58CV(A,X)110–20
CSPH*4812A**	0.99	1.03	58CV(A,X)110–20
CAP**4224A**	0.98	1.02	58CV(A,X)135–22
CAP**4824A**	0.99	0.99	58CV(A,X)135–22
CNPH*4221A**	0.98	1.02	58CV(A,X)135–22
CNPH*4821A**	0.99	1.03	58CV(A,X)135–22
CNPV*4824A**	0.98	1.02	58CV(A,X)135–22
CSPH*4212A**	0.98	1.02	58CV(A,X)135–22
CSPH*4812A**	0.99	1.03	58CV(A,X)135–22
CAP**4224A**	0.98	1.02	58CV(A,X)155–22
CAP**4824A**	0.99	0.99	58CV(A,X)155–22
CNPH*4221A**	0.98	1.02	58CV(A,X)155–22
CNPH*4821A**	0.99	1.03	58CV(A,X)155–22
CNPV*4824A**	0.98	1.02	58CV(A,X)155–22
CSPH*4212A**	0.98	1.02	58CV(A,X)155–22
CSPH*4812A**	0.99	1.03	58CV(A,X)155–22
CAP**4817A**	1.00	1.04	58MEB040–12
CNPH*4221A**	0.98	1.06	58MEB040–12
CNPH*4821A**	1.00	1.04	58MEB040–12
CNPV*4217A**	0.99	1.03	58MEB040–12
CSPH*4212A**	1.00	1.04	58MEB040–12
CSPH*4812A**	1.00	1.04	58MEB040–12
CAP**4817A**	1.00	1.04	58MEB060–12
CNPH*4221A**	0.98	1.06	58MEB060–12
CNPH*4821A**	1.00	1.04	58MEB060–12
CNPV*4217A**	0.99	1.03	58MEB060–12
CSPH*4212A**	1.00	1.04	58MEB060–12
CSPH*4812A**	1.00	1.04	58MEB060–12
CAP**4817A**	1.00	1.04	58MEB080–12
CNPH*4221A**	0.98	1.06	58MEB080–12
CNPH*4821A**	1.00	1.04	58MEB080–12
CNPV*4217A**	0.99	1.03	58MEB080–12
CNPV*4821A**	1.00	1.04	58MEB080–12
CSPH*4212A**	1.00	1.04	58MEB080–12
CSPH*4812A**	1.00	1.04	58MEB080–12
CAP**4817A**	1.00	1.04	58MEB080–16
CNPH*4221A**	0.98	1.06	58MEB080–16
CNPH*4821A**	0.99	1.03	58MEB080–16

COOLING INDOOR MODEL	CAPACITY	POWER	FURNACE MODEL
CNPV*4217A**	0.98	1.02	58MEB080–16
CNPV*4821A**	0.99	1.03	58MEB080–16
CSPH*4212A**	0.99	1.03	58MEB080–16
CSPH*4812A**	1.00	1.04	58MEB080–16
CAP**4221A**	0.98	1.02	58MEB100–20
CAP**4821A**	1.00	1.00	58MEB100–20
CNPH*4221A**	0.98	1.02	58MEB100–20
CNPH*4821A**	1.00	1.00	58MEB100–20
CNPV*4221A**	0.98	1.02	58MEB100–20
CNPV*4821A**	1.00	1.00	58MEB100–20
CSPH*4212A**	1.00	1.00	58MEB100–20
CSPH*4812A**	1.00	1.00	58MEB100–20
CAP**4224A**	0.98	1.02	58MEB120–20
CAP**4824A**	1.00	1.00	58MEB120–20
CNPH*4221A**	0.98	1.02	58MEB120–20
CNPH*4821A**	1.00	1.00	58MEB120–20
CNPV*4824A**	1.00	1.00	58MEB120–20
CSPH*4212A**	1.00	1.00	58MEB120–20
CSPH*4812A**	1.00	1.00	58MEB120–20
CNPV*4217A**	0.99	1.03	58MV(B,C)060–14
CAP**4224A**	0.96	1.05	58MVB040–14
CAP**4824A**	0.98	1.02	58MVB040–14
CNPH*4221A**	0.96	1.00	58MVB040–14
CNPH*4821A**	0.98	1.02	58MVB040–14
CNPV*4824A**	0.96	1.00	58MVB040–14
CSPH*4212A**	0.96	1.05	58MVB040–14
CSPH*4812A**	0.98	1.02	58MVB040–14
CAP**4817A**	0.95	0.99	58MVB060–14
CNPH*4221A**	0.96	1.00	58MVB060–14
CNPH*4821A**	0.98	1.02	58MVB060–14
CSPH*4212A**	0.96	1.00	58MVB060–14
CSPH*4812A**	0.98	1.02	58MVB060–14
CAP**4221A**	0.96	1.05	58MVB080–14
CAP**4821A**	0.98	1.02	58MVB080–14
CNPH*4221A**	0.96	1.00	58MVB080–14
CNPH*4821A**	0.98	1.02	58MVB080–14
CNPV*4221A**	0.96	1.00	58MVB080–14
CNPV*4821A**	0.98	1.02	58MVB080–14
CSPH*4212A**	0.96	1.00	58MVB080–14

DETAILED COOLING CAPACITIES# CONTINUED

25HPA442A Outdoor Section With FX4CN(F,B)048 Indoor Section

COOLING INDOOR MODEL	CAPACITY	POWER	FURNACE MODEL
CSPH*4812A**	0.98	1.02	58MVB080–14
CAP**4221A**	0.96	1.00	58MVB080–20
CAP**4821A**	0.99	1.03	58MVB080–20
CNPH*4221A**	0.96	1.00	58MVB080–20
CNPH*4821A**	0.99	1.03	58MVB080–20
CNPV*4221A**	0.96	1.00	58MVB080–20
CNPV*4821A**	0.99	1.03	58MVB080–20
CSPH*4212A**	0.96	1.00	58MVB080–20
CSPH*4812A**	0.99	1.03	58MVB080–20
CAP**4221A**	0.96	1.00	58MVB100–20
CAP**4821A**	0.99	1.03	58MVB100–20
CNPH*4221A**	0.96	1.00	58MVB100–20
CNPH*4821A**	0.99	1.03	58MVB100–20
CNPV*4221A**	0.96	1.00	58MVB100–20
CNPV*4821A**	0.99	1.03	58MVB100–20
CSPH*4212A**	0.96	1.00	58MVB100–20
CSPH*4812A**	0.99	1.03	58MVB100–20
CAP**4224A**	0.96	1.00	58MVB120–20
CAP**4824A**	0.99	1.03	58MVB120–20
CNPH*4221A**	0.96	1.00	58MVB120–20
CNPH*4821A**	0.99	1.03	58MVB120–20
CNPV*4824A**	0.96	1.00	58MVB120–20
CSPH*4212A**	0.96	1.00	58MVB120–20
CSPH*4812A**	0.99	1.03	58MVB120–20
CAP**4817A**	0.99	1.07	58PH*070–16
CNPH*4221A**	0.96	1.08	58PH*070–16
CNPH*4821A**	0.99	1.07	58PH*070–16
CNPV*4217A**	0.98	1.06	58PH*070–16
CSPH*4212A**	0.99	1.07	58PH*070–16
CSPH*4812A**	0.99	1.07	58PH*070–16
CAP**4221A**	0.98	1.02	58PH*090–16
CAP**4821A**	0.99	1.03	58PH*090–16
CNPH*4221A**	0.98	1.02	58PH*090–16
CNPH*4821A**	1.00	1.00	58PH*090–16
CNPV*4221A**	0.98	1.02	58PH*090–16
CNPV*4821A**	1.00	1.04	58PH*090–16
CSPH*4212A**	1.00	1.00	58PH*090–16
CSPH*4812A**	1.00	1.00	58PH*090–16
CAP**4221A**	0.98	1.02	58PH*110–20
CAP**4821A**	0.99	0.99	58PH*110–20
CNPH*4221A**	0.98	1.02	58PH*110–20
CNPH*4821A**	1.00	1.00	58PH*110–20
CNPV*4221A**	0.98	1.02	58PH*110–20
CNPV*4821A**	1.00	1.00	58PH*110–20
CSPH*4212A**	1.00	1.00	58PH*110–20
CSPH*4812A**	1.00	1.00	58PH*110–20
CAP**4224A**	0.98	1.02	58PH*135–20
CAP**4824A**	0.99	0.99	58PH*135–20
CNPH*4221A**	0.98	1.02	58PH*135–20
CNPH*4821A**	1.00	1.00	58PH*135–20
CNPV*4824A**	1.00	1.00	58PH*135–20
CSPH*4212A**	1.00	1.00	58PH*135–20
CSPH*4812A**	1.00	1.00	58PH*135–20

See notes on pg. 32

DETAILED COOLING CAPACITIES# CONTINUED

EVAPORATOR AIR		CONDENSER ENTERING AIR TEMPERATURES °F (°C)																	
		75 (23.9)			85 (29.4)			95 (35)			105 (40.6)			115 (46.1)			125 (51.7)		
CFM	EWB °F (°C)	Capacity MBtuh		Total Sys. KW**	Capacity MBtuh		Total Sys. KW**	Capacity MBtuh		Total Sys. KW**	Capacity MBtuh		Total Sys. KW**	Capacity MBtuh		Total Sys. KW**	Capacity MBtuh		Total Sys. KW**
		Total	Sens‡		Total	Sens‡		Total	Sens‡		Total	Sens‡		Total	Sens‡		Total	Sens‡	
25HPA548 Outdoor Section With FX4CN(B,F)060 Indoor Section																			
1400	72 (22.2)	57.56	28.58	2.86	54.77	27.52	3.23	51.87	26.44	3.64	48.85	25.33	4.08	45.67	24.18	4.54	43.65	23.46	4.52
	67 (19.4)	52.39	35.28	2.87	49.82	34.20	3.24	47.16	33.10	3.64	44.39	31.97	4.07	41.48	30.80	4.53	38.34	29.55	5.02
	63 (17.2)††	48.60	34.09	2.87	46.20	33.01	3.24	43.72	31.91	3.63	41.15	30.79	4.06	38.44	29.61	4.51	35.52	28.37	5.00
	62 (16.7)	47.61	41.94	2.87	45.27	40.82	3.24	42.87	39.67	3.63	40.40	38.45	4.06	37.99	37.99	4.51	35.64	35.64	5.00
	57 (13.9)	45.94	45.94	2.88	44.09	44.09	3.24	42.16	42.16	3.63	40.14	40.14	4.06	37.99	37.99	4.51	35.64	35.64	5.00
1600	72 (22.2)	58.70	29.95	2.91	55.79	28.88	3.29	52.76	27.78	3.69	49.62	26.65	4.13	46.31	25.48	4.60	44.26	24.77	4.58
	67 (19.4)	53.47	37.54	2.92	50.78	36.44	3.29	48.00	35.32	3.69	45.12	34.16	4.12	42.09	32.96	4.58	38.84	31.68	5.07
	63 (17.2)††	49.65	36.22	2.92	47.13	35.12	3.29	44.54	34.00	3.69	41.86	32.84	4.12	39.04	31.64	4.57	36.02	30.36	5.06
	62 (16.7)	48.71	45.00	2.92	46.30	43.80	3.29	43.87	43.87	3.69	41.69	41.69	4.11	39.39	39.39	4.57	36.89	36.89	5.06
	57 (13.9)	47.89	47.89	2.93	45.91	45.91	3.29	43.85	43.85	3.69	41.69	41.69	4.11	39.39	39.39	4.57	36.89	36.89	5.06
1800	72 (22.2)	59.55	31.25	2.96	56.54	30.17	3.34	53.41	29.05	3.75	50.18	27.91	4.18	46.77	26.72	4.65	44.70	26.02	4.64
	67 (19.4)	54.28	39.70	2.97	51.49	38.58	3.34	48.62	37.44	3.75	45.66	36.25	4.18	42.54	35.03	4.64	39.20	33.71	5.13
	63 (17.2)††	50.44	38.26	2.97	47.83	37.13	3.34	45.15	35.98	3.74	42.38	34.80	4.17	39.48	33.57	4.63	36.40	32.25	5.11
	62 (16.7)	49.69	49.29	2.98	47.43	47.43	3.34	45.26	45.26	3.74	42.97	42.97	4.17	40.55	40.55	4.63	37.90	37.90	5.12
	57 (13.9)	49.53	49.53	2.98	47.44	47.44	3.34	45.26	45.26	3.74	42.98	42.98	4.17	40.55	40.55	4.63	37.90	37.90	5.12

COOLING INDOOR MODEL	CAPACITY	POWER	FURNACE MODEL
*FX4CN(B,F)060	1.00	1.00	
FE4ANB006	1.00	1.00	
FE4ANF005	1.00	1.04	
FV4BNB006	1.00	1.00	
FV4BNF005	1.00	1.04	
FX4CN(B,F)048	1.00	1.04	
FX4CN(B,F)048	1.00	1.08	
FY4ANB060	1.00	1.08	
FY4ANF048	1.00	1.16	
CAP**4817A**	0.98	1.06	
CAP**4821A**	0.99	1.07	
CAP**4824A**	0.99	1.07	
CAP**6021A**	1.00	1.08	
CAP**6024A**	1.00	1.08	
CNPF*4818A**	0.98	1.11	
CNPH*4821A**	1.00	1.08	
CNPH*6024A**	1.00	1.08	
CNPV*4821A**	1.00	1.08	
CNPV*4824A**	1.00	1.08	
CNPV*6024A**	1.00	1.08	
CSPH*4812A**	1.00	1.13	
CSPH*6012A**	1.00	1.08	
CAP**4817A**	0.96	1.04	58CV(A,X)090–16
CNPH*4821A**	0.98	1.06	58CV(A,X)090–16
CNPH*6024A**	1.00	1.08	58CV(A,X)090–16
CSPH*4812A**	0.98	1.06	58CV(A,X)090–16
CSPH*6012A**	1.00	1.08	58CV(A,X)090–16
CAP**4821A**	0.98	1.06	58CV(A,X)110–20
CAP**6021A**	1.00	1.04	58CV(A,X)110–20
CNPH*4821A**	0.98	1.06	58CV(A,X)110–20
CNPH*6024A**	1.00	1.04	58CV(A,X)110–20
CNPV*4821A**	0.98	1.06	58CV(A,X)110–20
CSPH*4812A**	0.98	1.06	58CV(A,X)110–20
CSPH*6012A**	1.00	1.08	58CV(A,X)110–20
CAP**4824A**	0.99	1.07	58CV(A,X)135–22
CAP**6024A**	1.00	1.04	58CV(A,X)135–22
CNPH*4821A**	0.99	1.07	58CV(A,X)135–22
CNPH*6024A**	1.00	1.04	58CV(A,X)135–22
CNPV*4824A**	0.99	1.03	58CV(A,X)135–22

COOLING INDOOR MODEL	CAPACITY	POWER	FURNACE MODEL
CNPV*6024A**	1.00	1.04	58CV(A,X)135–22
CSPH*4812A**	0.99	1.07	58CV(A,X)135–22
CSPH*6012A**	1.00	1.04	58CV(A,X)135–22
CAP**4824A**	0.99	1.03	58CV(A,X)155–22
CAP**6024A**	1.00	1.04	58CV(A,X)155–22
CNPH*4821A**	0.99	1.03	58CV(A,X)155–22
CNPH*6024A**	1.00	1.04	58CV(A,X)155–22
CNPV*4824A**	0.99	1.03	58CV(A,X)155–22
CNPV*6024A**	1.00	1.04	58CV(A,X)155–22
CSPH*4812A**	0.99	1.03	58CV(A,X)155–22
CSPH*6012A**	1.00	1.04	58CV(A,X)155–22
CAP**4817A**	0.99	1.07	58MEB080–16
CNPH*4821A**	0.99	1.07	58MEB080–16
CNPH*6024A**	1.00	1.04	58MEB080–16
CSPH*4812A**	1.00	1.08	58MEB080–16
CSPH*6012A**	1.00	1.04	58MEB080–16
CAP**4821A**	0.99	1.03	58MEB100–20
CAP**6021A**	1.00	1.04	58MEB100–20
CNPH*4821A**	0.99	1.03	58MEB100–20
CNPH*6024A**	1.00	1.04	58MEB100–20
CNPV*4821A**	0.99	1.03	58MEB100–20
CSPH*4812A**	1.00	1.04	58MEB100–20
CSPH*6012A**	1.00	1.04	58MEB100–20
CAP**4824A**	0.99	1.03	58MEB120–20
CAP**6024A**	1.00	1.04	58MEB120–20
CNPH*4821A**	1.00	1.04	58MEB120–20
CNPH*6024A**	1.00	1.04	58MEB120–20
CNPV*4824A**	1.00	1.04	58MEB120–20
CNPV*6024A**	1.00	1.04	58MEB120–20
CSPH*4812A**	1.00	1.04	58MEB120–20
CSPH*6012A**	1.00	1.04	58MEB120–20
CAP**4821A**	0.98	1.06	58MVB080–20
CAP**6021A**	1.00	1.08	58MVB080–20
CNPH*4821A**	0.98	1.06	58MVB080–20
CNPH*6024A**	1.00	1.08	58MVB080–20
CNPV*4821A**	0.98	1.06	58MVB080–20
CSPH*4812A**	0.98	1.06	58MVB080–20
CSPH*6012A**	1.00	1.08	58MVB080–20
CAP**4821A**	0.98	1.06	58MVB100–20

COOLING INDOOR MODEL	CAPACITY	POWER	FURNACE MODEL
CAP**6021A**	1.00	1.08	58MVB100–20
CNPH*4821A**	0.98	1.06	58MVB100–20
CNPH*6024A**	1.00	1.08	58MVB100–20
CNPV*4821A**	0.98	1.06	58MVB100–20
CSPH*4812A**	0.98	1.06	58MVB100–20
CSPH*6012A**	1.00	1.08	58MVB100–20
CAP**4824A**	0.98	1.06	58MVB120–20
CAP**6024A**	1.00	1.08	58MVB120–20
CNPH*4821A**	0.98	1.06	58MVB120–20
CNPH*6024A**	1.00	1.08	58MVB120–20
CNPV*4824A**	0.98	1.06	58MVB120–20
CNPV*6024A**	1.00	1.08	58MVB120–20
CSPH*4812A**	0.98	1.06	58MVB120–20
CSPH*6012A**	1.00	1.08	58MVB120–20
CAP**4821A**	0.99	1.07	58PH*090–16
CAP**6021A**	1.00	1.04	58PH*090–16
CNPH*4821A**	0.99	1.07	58PH*090–16
CNPH*6024A**	1.00	1.04	58PH*090–16
CNPV*4821A**	0.99	1.07	58PH*090–16
CSPH*4812A**	1.00	1.08	58PH*090–16
CSPH*6012A**	1.00	1.04	58PH*090–16
CAP**4821A**	0.99	1.07	58PH*110–20
CAP**6021A**	1.00	1.04	58PH*110–20
CNPH*4821A**	0.99	1.03	58PH*110–20
CNPH*6024A**	1.00	1.04	58PH*110–20
CNPV*4821A**	0.99	1.03	58PH*110–20
CSPH*4812A**	1.00	1.04	58PH*110–20
CSPH*6012A**	1.00	1.04	58PH*110–20
CAP**4824A**	0.99	1.07	58PH*135–20
CAP**6024A**	1.00	1.04	58PH*135–20
CNPH*4821A**	0.99	1.07	58PH*135–20
CNPH*6024A**	1.00	1.04	58PH*135–20
CNPV*4824A**	0.99	1.07	58PH*135–20
CNPV*6024A**	1.00	1.04	58PH*135–20
CSPH*4812A**	1.00	1.08	58PH*135–20
CSPH*6012A**	1.00	1.04	58PH*135–20

See notes on pg. 32

DETAILED COOLING CAPACITIES# CONTINUED

EVAPORATOR AIR		CONDENSER ENTERING AIR TEMPERATURES °F (°C)																	
		75 (23.9)			85 (29.4)			95 (35)			105 (40.6)			115 (46.1)			125 (51.7)		
CFM	EWB °F (°C)	Capacity MBtuh		Total Sys. KW**	Capacity MBtuh		Total Sys. KW**	Capacity MBtuh		Total Sys. KW**	Capacity MBtuh		Total Sys. KW**	Capacity MBtuh		Total Sys. KW**	Capacity MBtuh		Total Sys. KW**
		Total	Sens‡		Total	Sens‡		Total	Sens‡		Total	Sens‡		Total	Sens‡		Total	Sens‡	
25HPA560 Outdoor Section With FX4CN(B,F)060 Indoor Section																			
1750	72 (22.2)	71.27	35.85	4.27	67.90	34.57	4.71	64.26	33.21	5.19	60.46	31.81	5.73	56.36	30.32	6.30	51.82	28.69	6.91
	67 (19.4)	65.64	44.71	4.20	62.52	43.39	4.65	59.17	42.00	5.13	55.69	40.56	5.66	51.92	39.04	6.24	47.78	37.37	6.85
	63 (17.2)††	61.44	43.43	4.15	58.50	42.11	4.60	55.38	40.71	5.08	52.12	39.27	5.61	48.62	37.74	6.19	44.78	36.09	6.80
	62 (16.7)	60.30	53.47	4.14	57.43	52.08	4.58	54.41	50.60	5.07	51.27	49.01	5.60	48.06	48.06	6.18	46.53	46.53	6.21
	57 (13.9)	58.28	58.28	4.12	55.98	55.98	4.57	53.52	53.52	5.06	50.91	50.91	5.60	48.06	48.06	6.18	44.89	44.89	6.81
2000	72 (22.2)	72.36	37.44	4.35	68.85	36.15	4.80	65.08	34.78	5.28	61.15	33.36	5.81	56.91	31.85	6.38	52.23	30.20	6.99
	67 (19.4)	66.73	47.42	4.29	63.48	46.09	4.73	60.00	44.67	5.22	56.38	43.21	5.75	52.49	41.65	6.32	48.21	39.94	6.94
	63 (17.2)††	62.54	45.99	4.24	59.48	44.64	4.68	56.23	43.22	5.17	52.85	41.76	5.70	49.22	40.19	6.27	45.25	38.49	6.89
	62 (16.7)	61.48	57.14	4.23	58.54	55.65	4.67	55.42	55.42	5.16	52.59	52.59	5.70	49.56	49.56	6.28	46.17	46.17	6.90
	57 (13.9)	60.48	60.48	4.22	58.02	58.02	4.67	55.38	55.38	5.16	52.60	52.60	5.70	49.56	49.56	6.28	46.17	46.17	6.90
2250	72 (22.2)	73.14	38.96	4.44	69.53	37.66	4.88	65.66	36.27	5.36	61.62	34.84	5.89	57.28	33.32	6.46	52.48	31.66	7.07
	67 (19.4)	67.51	50.01	4.38	64.17	48.66	4.82	60.58	47.22	5.30	56.87	45.73	5.83	52.88	44.13	6.40	48.51	42.37	7.02
	63 (17.2)††	63.34	48.43	4.33	60.19	47.06	4.77	56.84	45.61	5.25	53.36	44.11	5.78	49.64	42.51	6.35	45.58	40.74	6.97
	62 (16.7)	62.51	60.37	4.32	59.67	59.67	4.76	56.88	56.88	5.25	53.95	53.95	5.79	50.75	50.75	6.37	47.18	47.18	7.00
	57 (13.9)	62.27	62.27	4.32	59.67	59.67	4.76	56.89	56.89	5.25	53.95	53.95	5.79	50.76	50.76	6.37	47.18	47.18	7.00

COOLING INDOOR MODEL	CAPACITY	POWER	FURNACE MODEL
*FX4CN(B,F)060	1.00	1.00	
FE4ANB006	0.99	0.99	
FV4BNB006	0.99	0.99	
FY4ANB060	0.99	1.06	
CNPV*6024A**	0.98	1.03	
CSPH*6012A**	0.98	1.02	
CAP**6021A**	0.97	0.99	58CV(A,X)110–20
CNPH*6024A**	0.98	1.00	58CV(A,X)110–20
CSPH*6012A**	0.98	1.00	58CV(A,X)110–20
CAP**6024A**	0.98	1.00	58CV(A,X)135–22
CNPH*6024A**	0.98	1.00	58CV(A,X)135–22
CNPV*6024A**	0.98	1.00	58CV(A,X)135–22

COOLING INDOOR MODEL	CAPACITY	POWER	FURNACE MODEL
CSPH*6012A**	0.98	1.00	58CV(A,X)135–22
CAP**6024A**	0.98	1.01	58CV(A,X)155–22
CNPH*6024A**	0.98	1.00	58CV(A,X)155–22
CNPV*6024A**	0.98	1.00	58CV(A,X)155–22
CSPH*6012A**	0.98	1.01	58CV(A,X)155–22
CNPH*6024A**	0.96	1.00	58MEB080–16
CSPH*6012A**	0.97	1.01	58MEB080–16
CAP**6021A**	0.98	1.02	58MEB100–20
CNPH*6024A**	0.97	0.99	58MEB100–20
CSPH*6012A**	0.98	0.98	58MEB100–20
CAP**6024A**	0.98	0.98	58MEB120–20
CNPH*6024A**	0.98	0.98	58MEB120–20

COOLING INDOOR MODEL	CAPACITY	POWER	FURNACE MODEL
CNPV*6024A**	0.98	0.98	58MEB120–20
CSPH*6012A**	0.98	0.98	58MEB120–20
CAP**6021A**	0.98	1.00	58PH*090–16
CNPH*6024A**	0.97	0.99	58PH*090–16
CSPH*6012A**	0.98	1.00	58PH*090–16
CAP**6021A**	0.98	1.01	58PH*110–20
CNPH*6024A**	0.98	1.00	58PH*110–20
CSPH*6012A**	0.98	1.01	58PH*110–20
CAP**6024A**	0.98	1.00	58PH*135–20
CNPH*6024A**	0.98	1.00	58PH*135–20
CNPV*6024A**	0.98	1.00	58PH*135–20
CSPH*6012A**	0.98	1.00	58PH*135–20

* Tested combination.

† Total and sensible capacities are net capacities. Blower motor heat has been subtracted.

‡ Sensible capacities shown are based on 80°F (27°C) entering air at the indoor coil. For sensible capacities at other than 80°F (27°C), deduct 835 Btuh (245 kW) per 1000 CFM (480 L/S) of indoor coil air for each degree below 80°F (27°C), or add 835 Btuh (245 kW) per 1000 CFM (480 L/S) of indoor coil air per degree above 80°F (27°C).

Detailed cooling capacities are based on indoor and outdoor unit at the same elevation per ARI standard 210/240–94. If additional tubing length and/or indoor unit is located above outdoor unit, a slight variation in capacity may occur.

** System kw is total of indoor and outdoor unit kilowatts.

†† At TVA rating indoor condition (75°F edb/63°F ewb). All other indoor air temperatures are at 80°F edb.

NOTE: When the required data falls between the published data, interpolation may be performed. Extrapolation is not an acceptable practice.

EWB — Entering Wet Bulb

HEAT PUMP HEATING PERFORMANCE

INDOOR AIR		OUTDOOR COIL ENTERING AIR TEMPERATURES ° F (° C)																							
		−3 (−19.4)			7 (−13.9)			17 (−8.3)			27 (−2.8)			37 (2.8)			47 (8.3)			57 (13.9)			67 (19.4)		
EDB ° F (° C)	CFM	Capacity MBtuh		Total Sys. KW†	Capacity MBtuh		Total Sys. KW†	Capacity MBtuh		Total Sys. KW†	Capacity MBtuh		Total Sys. KW†	Capacity MBtuh		Total Sys. KW†	Capacity MBtuh		Total Sys. KW†	Capacity MBtuh		Total Sys. KW†	Capacity MBtuh		Total Sys. KW†
		Total	Integ*		Total	Integ*		Total	Integ*		Total	Integ*		Total	Integ*		Total	Integ*		Total	Integ*		Total	Integ*	
25HPA518A30 Outdoor Section With FX4CNF018 Indoor Section																									
65 (18.3)	525	6.33	5.82	1.12	8.28	7.61	1.17	10.37	9.45	1.22	12.63	11.22	1.28	15.24	13.87	1.35	18.07	18.07	1.44	21.23	21.23	1.55	24.72	24.72	1.69
	600	6.44	5.93	1.12	8.41	7.73	1.16	10.52	9.59	1.21	12.84	11.40	1.26	15.49	14.10	1.33	18.38	18.38	1.41	21.63	21.63	1.51	25.07	25.07	1.61
	675	6.54	6.02	1.12	8.50	7.81	1.16	10.65	9.71	1.20	13.01	11.56	1.25	15.69	14.28	1.31	18.63	18.63	1.38	21.94	21.94	1.48	25.07	25.07	1.56
70 (21.1)	525	5.99	5.51	1.16	7.97	7.33	1.22	10.07	9.18	1.28	12.32	10.95	1.34	14.85	13.51	1.42	17.69	17.69	1.51	20.80	20.80	1.62	24.25	24.25	1.77
	600	6.10	5.62	1.16	8.11	7.45	1.22	10.23	9.33	1.27	12.51	11.11	1.32	15.11	13.75	1.39	18.00	18.00	1.47	21.19	21.19	1.58	24.69	24.69	1.69
	675	6.19	5.69	1.17	8.22	7.56	1.21	10.36	9.45	1.26	12.68	11.26	1.31	15.35	13.97	1.37	18.25	18.25	1.45	21.52	21.52	1.55	24.88	24.88	1.64
75 (23.9)	525	5.64	5.19	1.21	7.65	7.03	1.27	9.76	8.90	1.34	12.02	10.68	1.40	14.49	13.19	1.48	17.31	17.31	1.58	20.37	20.37	1.70	23.77	23.77	1.84
	600	5.75	5.29	1.21	7.76	7.13	1.27	9.92	9.05	1.33	12.21	10.84	1.38	14.75	13.42	1.45	17.62	17.62	1.54	20.76	20.76	1.65	24.26	24.26	1.78
	675	5.85	5.38	1.22	7.90	7.26	1.27	10.03	9.15	1.32	12.34	10.96	1.37	14.95	13.61	1.44	17.86	17.86	1.52	21.06	21.06	1.62	24.53	24.53	1.72

HEATING INDOOR MODEL	CAPACITY	POWER	FURNACE MODEL
*FX4CNF018	1.00	1.00	
FE4ANF002	0.99	0.97	
FF1ENP018	1.00	1.06	
FF1ENP024	1.00	1.05	
FV4BNF002	0.99	0.97	
FX4CNF024	1.00	0.99	
FY4ANF018	1.00	1.07	
FY4ANF024	1.00	1.06	
CAP**1814A**	1.00	1.08	
CAP**2414A**	1.00	1.04	
CAP**2417A**	1.00	1.04	
CNPF*2418A**	1.00	1.02	
CNPH*2417A**	1.00	1.02	
CNPV*1814A**	1.00	1.03	
CNPV*2414A**	1.00	1.02	
CNPV*2417A**	1.00	1.02	
CSPH*2412A**	1.00	1.02	
CAP**1814A**	0.97	1.04	58CV(A,X)070−12
CAP**2414A**	0.98	1.01	58CV(A,X)070−12
CNPH*2417A**	0.98	0.99	58CV(A,X)070−12
CNPV*1814A**	0.97	1.00	58CV(A,X)070−12
CNPV*2414A**	0.98	0.99	58CV(A,X)070−12
CSPH*2412A**	0.98	1.00	58CV(A,X)070−12
CAP**2417A**	0.98	1.00	58CV(A,X)090−16
CNPH*2417A**	0.98	0.98	58CV(A,X)090−16
CNPV*2417A**	0.98	0.98	58CV(A,X)090−16
CSPH*2412A**	0.98	0.99	58CV(A,X)090−16
CAP**2417A**	1.00	0.94	58MEB040−12
CNPH*2417A**	1.00	0.95	58MEB040−12
CNPV*2417A**	1.00	0.95	58MEB040−12
CSPH*2412A**	1.00	0.97	58MEB040−12
CAP**2417A**	0.99	0.96	58MEB060−12
CNPH*2417A**	0.99	0.97	58MEB060−12
CNPV*2417A**	0.99	0.97	58MEB060−12
CSPH*2412A**	0.98	0.99	58MEB060−12
CNPH*2417A**	0.98	0.99	58MVB040−14
CSPH*2412A**	0.98	0.99	58MVB040−14
CAP**2417A**	0.98	1.00	58MVB060−14
CNPH*2417A**	0.98	0.99	58MVB060−14
CNPV*2417A**	0.98	0.99	58MVB060−14
CSPH*2412A**	0.98	0.99	58MVB060−14
CNPH*2417A**	0.98	0.98	58MVB080−14
CSPH*2412A**	0.98	0.99	58MVB080−14
CAP**1814A**	0.98	1.02	58PH*045−08

HEATING INDOOR MODEL	CAPACITY	POWER	FURNACE MODEL
CAP**2414A**	0.99	0.98	58PH*045−08
CNPH*2417A**	1.00	0.98	58PH*045−08
CNPV*1814A**	0.99	1.00	58PH*045−08
CNPV*2414A**	1.00	0.98	58PH*045−08
CSPH*2412A**	0.99	0.98	58PH*045−08

See notes on pg. 42

HEAT PUMP HEATING PERFORMANCE CONTINUED

INDOOR AIR		OUTDOOR COIL ENTERING AIR TEMPERATURES °F (°C)																							
		−3 (−19.4)			7 (−13.9)			17 (−8.3)			27 (−2.8)			37 (2.8)			47 (8.3)			57 (13.9)			67 (19.4)		
EDB °F (°C)	CFM	Capacity MBtuh		Total Sys. KW†	Capacity MBtuh		Total Sys. KW†	Capacity MBtuh		Total Sys. KW†	Capacity MBtuh		Total Sys. KW†	Capacity MBtuh		Total Sys. KW†	Capacity MBtuh		Total Sys. KW†	Capacity MBtuh		Total Sys. KW†	Capacity MBtuh		Total Sys. KW†
		Total	Integ*		Total	Integ*		Total	Integ*		Total	Integ*		Total	Integ*		Total	Integ*		Total	Integ*		Total	Integ*	
25HPA524A30 Outdoor Section With FX4CNF030 Indoor Section																									
65 (18.3)	700	8.58	7.89	1.34	11.19	10.28	1.43	13.94	12.71	1.51	16.89	15.00	1.59	20.18	18.36	1.70	23.88	23.88	1.82	27.94	27.94	1.97	32.52	32.52	2.16
	800	8.74	8.04	1.35	11.36	10.44	1.42	14.15	12.90	1.49	17.13	15.21	1.57	20.50	18.65	1.66	24.27	24.27	1.78	28.43	28.43	1.91	33.21	33.21	2.09
	900	8.87	8.16	1.35	11.51	10.58	1.42	14.32	13.05	1.48	17.34	15.40	1.55	20.80	18.92	1.64	24.58	24.58	1.74	28.81	28.81	1.87	33.73	33.73	2.04
70 (21.1)	700	8.13	7.48	1.40	10.78	9.91	1.49	13.56	12.37	1.58	16.53	14.68	1.67	19.75	17.97	1.78	23.42	23.42	1.91	27.42	27.42	2.07	31.93	31.93	2.26
	800	8.29	7.62	1.40	10.96	10.07	1.49	13.77	12.56	1.57	16.77	14.89	1.65	20.06	18.26	1.75	23.80	23.80	1.86	27.90	27.90	2.01	32.54	32.54	2.18
	900	8.42	7.75	1.41	11.11	10.21	1.49	13.95	12.72	1.56	16.96	15.06	1.63	20.32	18.49	1.72	24.10	24.10	1.83	28.28	28.28	1.96	33.06	33.06	2.13
75 (23.9)	700	7.64	7.03	1.46	10.35	9.51	1.56	13.16	12.00	1.65	16.15	14.34	1.76	19.32	17.59	1.87	22.97	22.97	2.01	26.90	26.90	2.17	31.27	31.27	2.36
	800	7.80	7.18	1.46	10.54	9.68	1.55	13.37	12.19	1.64	16.39	14.56	1.73	19.63	17.87	1.83	23.34	23.34	1.96	27.37	27.37	2.10	31.94	31.94	2.28
	900	7.94	7.31	1.47	10.69	9.83	1.55	13.55	12.36	1.63	16.59	14.73	1.72	19.89	18.10	1.81	23.64	23.64	1.92	27.75	27.75	2.06	32.39	32.39	2.23

HEATING INDOOR MODEL	CAPACITY	POWER	FURNACE MODEL
*FX4CNF030	1.00	1.00	
FE4ANF002	0.98	1.00	
FE4ANF003	0.98	1.00	
FF1ENP024	1.01	1.09	
FF1ENP030	1.01	1.09	
FV4BNF002	0.98	1.00	
FV4BNF003	0.98	1.00	
FX4CNF024	0.99	1.02	
FY4ANF024	1.01	1.09	
FY4ANF030	1.01	1.06	
CAP**2414A**	1.01	1.07	
CAP**2417A**	1.01	1.07	
CAP**3014A**	1.01	1.07	
CAP**3017A**	1.01	1.07	
CNPF*2418A**	1.01	1.05	
CNPH*2417A**	1.01	1.05	
CNPH*3017A**	1.01	1.06	
CNPV*2414A**	1.01	1.05	
CNPV*2417A**	1.01	1.05	
CNPV*3014A**	1.01	1.06	
CNPV*3017A**	1.01	1.06	
CSPH*2412A**	1.01	1.05	
CSPH*3012A**	1.01	1.06	
CAP**2414A**	0.97	1.03	58CV(A,X)070−12
CAP**3014A**	0.97	1.03	58CV(A,X)070−12
CNPH*2417A**	0.97	1.02	58CV(A,X)070−12
CNPH*3017A**	0.97	1.02	58CV(A,X)070−12
CNPV*2414A**	0.97	1.02	58CV(A,X)070−12
CNPV*3014A**	0.97	1.02	58CV(A,X)070−12
CSPH*2412A**	0.97	1.02	58CV(A,X)070−12
CSPH*3012A**	0.97	1.02	58CV(A,X)070−12
CAP**2417A**	0.97	1.02	58CV(A,X)090−16
CAP**3017A**	0.97	1.01	58CV(A,X)090−16
CNPH*2417A**	0.97	1.01	58CV(A,X)090−16
CNPH*3017A**	0.97	1.01	58CV(A,X)090−16
CNPV*2417A**	0.97	1.01	58CV(A,X)090−16
CNPV*3017A**	0.97	1.01	58CV(A,X)090−16
CSPH*2412A**	0.97	1.01	58CV(A,X)090−16
CSPH*3012A**	0.97	1.01	58CV(A,X)090−16
CNPH*2417A**	0.97	1.01	58CV(A,X)110−20
CNPH*3017A**	0.97	1.01	58CV(A,X)110−20
CSPH*2412A**	0.97	1.01	58CV(A,X)110−20
CSPH*3012A**	0.97	1.01	58CV(A,X)110−20
CNPH*2417A**	0.97	1.01	58CV(A,X)135−22

HEATING INDOOR MODEL	CAPACITY	POWER	FURNACE MODEL
CNPH*3017A**	0.97	1.01	58CV(A,X)135−22
CSPH*2412A**	0.97	1.01	58CV(A,X)135−22
CSPH*3012A**	0.97	1.01	58CV(A,X)135−22
CNPH*2417A**	0.97	1.01	58CV(A,X)155−22
CNPH*3017A**	0.97	1.01	58CV(A,X)155−22
CSPH*2412A**	0.97	1.01	58CV(A,X)155−22
CSPH*3012A**	0.97	1.01	58CV(A,X)155−22
CAP**2417A**	0.99	0.99	58MEB040−12
CAP**3017A**	0.99	0.98	58MEB040−12
CNPH*2417A**	0.99	1.00	58MEB040−12
CNPH*3017A**	0.99	0.98	58MEB040−12
CNPV*2417A**	0.99	1.00	58MEB040−12
CNPV*3017A**	0.99	0.98	58MEB040−12
CSPH*2412A**	0.99	1.00	58MEB040−12
CSPH*3012A**	0.99	0.99	58MEB040−12
CAP**2417A**	0.99	0.99	58MEB060−12
CAP**3017A**	1.00	0.99	58MEB060−12
CNPH*2417A**	0.99	1.00	58MEB060−12
CNPH*3017A**	1.00	0.99	58MEB060−12
CNPV*2417A**	0.99	1.00	58MEB060−12
CNPV*3017A**	1.00	0.99	58MEB060−12
CSPH*2412A**	0.99	1.00	58MEB060−12
CSPH*3012A**	0.99	0.99	58MEB060−12
CAP**2417A**	0.99	1.00	58MEB080−12
CAP**3017A**	0.99	0.99	58MEB080−12
CNPH*2417A**	0.99	1.00	58MEB080−12
CNPH*3017A**	0.99	0.99	58MEB080−12
CNPV*2417A**	0.99	1.00	58MEB080−12
CNPV*3017A**	0.99	0.99	58MEB080−12
CSPH*2412A**	0.99	1.01	58MEB080−12
CSPH*3012A**	0.99	1.00	58MEB080−12
CNPH*2417A**	0.97	1.01	58MVB040−14
CNPH*3017A**	0.97	1.01	58MVB040−14
CSPH*2412A**	0.97	1.01	58MVB040−14
CSPH*3012A**	0.97	1.02	58MVB040−14
CAP**2417A**	0.97	1.03	58MVB060−14
CAP**3017A**	0.97	1.02	58MVB060−14
CNPH*2417A**	0.97	1.01	58MVB060−14
CNPH*3017A**	0.97	1.02	58MVB060−14
CNPV*2417A**	0.97	1.01	58MVB060−14
CNPV*3017A**	0.97	1.02	58MVB060−14
CSPH*2412A**	0.97	1.01	58MVB060−14
CSPH*3012A**	0.97	1.02	58MVB060−14
CNPH*2417A**	0.97	1.01	58MVB080−14

HEATING INDOOR MODEL	CAPACITY	POWER	FURNACE MODEL
CNPH*3017A**	0.97	1.01	58MVB080−14
CSPH*2412A**	0.97	1.01	58MVB080−14
CSPH*3012A**	0.97	1.02	58MVB080−14
CNPH*2417A**	0.97	1.01	58MVB080−20
CNPH*3017A**	0.97	1.01	58MVB080−20
CSPH*2412A**	0.97	1.01	58MVB080−20
CSPH*3012A**	0.97	1.02	58MVB080−20
CNPH*2417A**	0.97	1.01	58MVB100−20
CNPH*3017A**	0.97	1.01	58MVB100−20
CSPH*2412A**	0.97	1.01	58MVB100−20
CSPH*3012A**	0.97	1.01	58MVB100−20
CNPH*2417A**	0.97	1.02	58MVB120−20
CNPH*3017A**	0.97	1.02	58MVB120−20
CSPH*2412A**	0.97	1.02	58MVB120−20
CSPH*3012A**	0.97	1.02	58MVB120−20
CAP**2414A**	0.97	1.01	58PH*045−08
CAP**3014A**	0.98	1.01	58PH*045−08
CNPH*2417A**	0.98	1.01	58PH*045−08
CNPH*3017A**	0.98	1.00	58PH*045−08
CNPV*2414A**	0.97	1.01	58PH*045−08
CNPV*3014A**	0.97	1.01	58PH*045−08
CSPH*2412A**	0.98	1.02	58PH*045−08
CSPH*3012A**	0.98	1.01	58PH*045−08

See notes on pg. 42

HEAT PUMP HEATING PERFORMANCE CONTINUED

INDOOR AIR		OUTDOOR COIL ENTERING AIR TEMPERATURES ° F (° C)																							
		–3 (–19.4)			7 (–13.9)			17 (–8.3)			27 (–2.8)			37 (2.8)			47 (8.3)			57 (13.9)			67 (19.4)		
EDB ° F (° C)	CFM	Capacity MBtuh		Total Sys. KW†	Capacity MBtuh		Total Sys. KW†	Capacity MBtuh		Total Sys. KW†	Capacity MBtuh		Total Sys. KW†	Capacity MBtuh		Total Sys. KW†	Capacity MBtuh		Total Sys. KW†	Capacity MBtuh		Total Sys. KW†	Capacity MBtuh		Total Sys. KW†
		Total	Integ*		Total	Integ*		Total	Integ*		Total	Integ*		Total	Integ*		Total	Integ*		Total	Integ*		Total	Integ*	
25HPA530A30 Outdoor Section With FX4CNF030 Indoor Section																									
65 (18.3)	875	10.94	10.07	1.72	14.09	12.95	1.81	17.44	15.90	1.89	21.04	18.69	1.98	24.99	22.74	2.08	29.49	29.49	2.21	34.39	34.39	2.36	39.81	39.81	2.55
	1000	11.16	10.26	1.73	14.33	13.17	1.81	17.72	16.16	1.88	21.36	18.97	1.96	25.39	23.10	2.05	29.96	29.96	2.17	34.98	34.98	2.31	40.60	40.60	2.48
	1125	11.34	10.44	1.75	14.53	13.35	1.81	17.96	16.37	1.88	21.61	19.20	1.95	25.72	23.40	2.03	30.35	30.35	2.14	35.46	35.46	2.27	41.24	41.24	2.43
70 (21.1)	875	10.36	9.53	1.79	13.60	12.50	1.88	16.95	15.46	1.97	20.58	18.28	2.07	24.47	22.26	2.18	28.94	28.94	2.32	33.75	33.75	2.47	39.12	39.12	2.67
	1000	10.61	9.76	1.80	13.85	12.72	1.88	17.24	15.72	1.96	20.90	18.56	2.05	24.86	22.62	2.15	29.40	29.40	2.27	34.35	34.35	2.41	39.85	39.85	2.59
	1125	10.80	9.94	1.82	14.06	12.92	1.89	17.48	15.93	1.96	21.16	18.80	2.04	25.19	22.92	2.13	29.78	29.78	2.24	34.81	34.81	2.37	40.44	40.44	2.54
75 (23.9)	875	9.76	8.98	1.86	13.04	11.99	1.96	16.47	15.01	2.06	20.10	17.85	2.17	23.98	21.82	2.28	28.30	28.30	2.42	33.12	33.12	2.59	38.41	38.41	2.78
	1000	9.99	9.19	1.87	13.29	12.22	1.96	16.76	15.28	2.05	20.44	18.15	2.15	24.35	22.16	2.25	28.84	28.84	2.38	33.70	33.70	2.52	39.13	39.13	2.70
	1125	10.18	9.36	1.88	13.51	12.42	1.97	17.00	15.50	2.05	20.71	18.39	2.14	24.65	22.43	2.23	29.22	29.22	2.35	34.18	34.18	2.48	39.70	39.70	2.65

Heating Indoor Model	Capacity	Power	Furnace Model
*FX4CNF030	1.00	1.00	
FE4ANF002	0.99	0.99	
FE4ANF003	0.98	0.98	
FE4ANF005	0.99	0.95	
FF1ENP030	1.01	1.07	
FF1ENP036	1.02	1.06	
FV4BNF002	0.99	0.99	
FV4BNF003	0.98	0.98	
FV4BNF005	0.99	0.95	
FX4CN(B,F)036	1.01	1.01	
FY4ANF030	1.02	1.05	
FY4ANF036	1.02	1.06	
CAP**3014A**	1.02	1.06	
CAP**3017A**	1.02	1.06	
CAP**3614A**	0.99	1.02	
CAP**3617A**	1.02	1.06	
CAP**3621A**	1.02	1.06	
CNPF*3618A**	1.02	1.06	
CNPH*3017A**	1.02	1.06	
CNPH*3617A**	1.02	1.06	
CNPV*3014A**	1.02	1.06	
CNPV*3017A**	1.02	1.06	
CNPV*3617A**	1.02	1.06	
CNPV*3621A**	1.02	1.06	
CSPH*3012A**	1.02	1.05	
CSPH*3612A**	1.02	1.02	
CAP**3014A**	0.98	1.02	58CV(A,X)070–12
CAP**3614A**	0.95	0.98	58CV(A,X)070–12
CNPH*3017A**	0.98	1.01	58CV(A,X)070–12
CNPH*3617A**	0.98	1.01	58CV(A,X)070–12
CNPV*3014A**	0.98	1.02	58CV(A,X)070–12
CSPH*3012A**	0.98	1.01	58CV(A,X)070–12
CSPH*3612A**	0.98	0.98	58CV(A,X)070–12
CAP**3017A**	0.98	1.01	58CV(A,X)090–16
CAP**3617A**	0.98	1.00	58CV(A,X)090–16
CNPH*3017A**	0.98	1.00	58CV(A,X)090–16
CNPH*3617A**	0.98	1.00	58CV(A,X)090–16
CNPV*3017A**	0.98	1.00	58CV(A,X)090–16
CNPV*3617A**	0.98	1.00	58CV(A,X)090–16
CSPH*3012A**	0.98	1.00	58CV(A,X)090–16

Heating Indoor Model	Capacity	Power	Furnace Model
CSPH*3612A**	0.98	0.97	58CV(A,X)090–16
CAP**3621A**	0.98	0.99	58CV(A,X)110–20
CNPH*3017A**	0.98	1.00	58CV(A,X)110–20
CNPH*3617A**	0.98	1.00	58CV(A,X)110–20
CNPV*3621A**	0.98	1.00	58CV(A,X)110–20
CSPH*3012A**	0.98	1.00	58CV(A,X)110–20
CSPH*3612A**	0.98	0.97	58CV(A,X)110–20
CNPH*3017A**	0.98	1.00	58CV(A,X)135–22
CNPH*3617A**	0.98	1.00	58CV(A,X)135–22
CSPH*3012A**	0.98	1.00	58CV(A,X)135–22
CSPH*3612A**	0.98	0.97	58CV(A,X)135–22
CNPH*3017A**	0.98	1.00	58CV(A,X)155–22
CNPH*3617A**	0.98	1.00	58CV(A,X)155–22
CSPH*3012A**	0.98	1.00	58CV(A,X)155–22
CSPH*3612A**	0.98	0.97	58CV(A,X)155–22
CAP**3017A**	0.99	0.99	58MEB040–12
CAP**3617A**	0.99	0.98	58MEB040–12
CNPH*3017A**	0.99	0.99	58MEB040–12
CNPH*3617A**	0.99	0.99	58MEB040–12
CNPV*3017A**	0.99	0.99	58MEB040–12
CNPV*3617A**	0.99	0.99	58MEB040–12
CSPH*3012A**	0.99	0.99	58MEB040–12
CSPH*3612A**	1.00	0.96	58MEB040–12
CAP**3017A**	0.99	0.99	58MEB060–12
CAP**3617A**	0.99	0.98	58MEB060–12
CNPH*3017A**	0.99	0.99	58MEB060–12
CNPH*3617A**	0.99	0.99	58MEB060–12
CNPV*3017A**	0.99	0.99	58MEB060–12
CNPV*3617A**	0.99	0.99	58MEB060–12
CSPH*3012A**	0.99	1.00	58MEB060–12
CSPH*3612A**	1.00	0.96	58MEB060–12
CAP**3017A**	0.99	0.99	58MEB080–12
CAP**3617A**	0.99	0.98	58MEB080–12
CNPH*3017A**	0.99	0.99	58MEB080–12
CNPH*3617A**	0.99	0.99	58MEB080–12
CNPV*3017A**	0.99	0.99	58MEB080–12
CNPV*3617A**	0.99	0.99	58MEB080–12
CSPH*3012A**	0.99	1.00	58MEB080–12
CSPH*3612A**	1.00	0.97	58MEB080–12
CAP**3017A**	0.99	0.99	58MEB080–16

Heating Indoor Model	Capacity	Power	Furnace Model
CAP**3617A**	1.00	0.98	58MEB080–16
CNPH*3017A**	0.99	0.99	58MEB080–16
CNPH*3617A**	0.99	0.99	58MEB080–16
CNPV*3017A**	0.99	0.99	58MEB080–16
CNPV*3617A**	0.99	0.99	58MEB080–16
CSPH*3012A**	0.99	0.99	58MEB080–16
CSPH*3612A**	1.01	0.96	58MEB080–16
CNPH*3017A**	0.98	1.01	58MVB040–14
CNPH*3617A**	0.98	1.01	58MVB040–14
CSPH*3012A**	0.98	1.01	58MVB040–14
CSPH*3612A**	0.98	0.98	58MVB040–14
CAP**3017A**	0.98	1.01	58MVB060–14
CAP**3617A**	0.98	1.01	58MVB060–14
CNPH*3017A**	0.98	1.01	58MVB060–14
CNPH*3617A**	0.98	1.01	58MVB060–14
CNPV*3017A**	0.98	1.01	58MVB060–14
CNPV*3617A**	0.98	1.01	58MVB060–14
CSPH*3012A**	0.98	1.01	58MVB060–14
CSPH*3612A**	0.98	0.98	58MVB060–14
CAP**3621A**	0.98	1.00	58MVB080–14
CNPH*3017A**	0.98	1.01	58MVB080–14
CNPH*3617A**	0.98	1.01	58MVB080–14
CNPV*3621A**	0.98	1.01	58MVB080–14
CSPH*3012A**	0.98	1.01	58MVB080–14
CSPH*3612A**	0.98	0.98	58MVB080–14
CAP**3621A**	0.98	1.00	58MVB080–20
CNPH*3017A**	0.98	1.01	58MVB080–20
CNPH*3617A**	0.98	1.01	58MVB080–20
CNPV*3621A**	0.98	1.01	58MVB080–20
CSPH*3012A**	0.98	1.01	58MVB080–20
CSPH*3612A**	0.98	0.98	58MVB080–20
CAP**3621A**	0.98	1.00	58MVB100–20
CNPH*3017A**	0.98	1.01	58MVB100–20
CNPH*3617A**	0.98	1.01	58MVB100–20
CNPV*3621A**	0.98	1.01	58MVB100–20
CSPH*3012A**	0.98	1.00	58MVB100–20
CSPH*3612A**	0.98	0.97	58MVB100–20
CNPH*3017A**	0.98	1.01	58MVB120–20
CNPH*3617A**	0.98	1.01	58MVB120–20
CSPH*3012A**	0.98	1.01	58MVB120–20

HEAT PUMP HEATING PERFORMANCE CONTINUED

25HPA530A30 Outdoor Section With FX4CNF030 Indoor Section

Heating Indoor Model	Capacity	Power	Furnace Model
CSPH*3612A**	0.98	0.98	58MVB120–20
CAP**3017A**	0.99	1.02	58PH*070–16
CAP**3617A**	0.99	1.01	58PH*070–16
CNPH*3017A**	0.99	1.02	58PH*070–16
CNPH*3617A**	0.99	1.02	58PH*070–16
CNPV*3017A**	0.99	1.02	58PH*070–16
CNPV*3617A**	0.99	1.02	58PH*070–16
CSPH*3012A**	0.99	1.02	58PH*070–16
CSPH*3612A**	1.00	0.99	58PH*070–16
CAP**3621A**	0.99	0.98	58PH*090–16
CNPH*3017A**	0.99	1.00	58PH*090–16
CNPH*3617A**	0.99	1.00	58PH*090–16
CNPV*3621A**	0.99	1.00	58PH*090–16
CSPH*3012A**	0.99	1.01	58PH*090–16
CSPH*3612A**	1.00	0.97	58PH*090–16

See notes on pg. 42

HEAT PUMP HEATING PERFORMANCE CONTINUED

INDOOR AIR		OUTDOOR COIL ENTERING AIR TEMPERATURES ° F (° C)																							
		–3 (–19.4)			7 (–13.9)			17 (–8.3)			27 (–2.8)			37 (2.8)			47 (8.3)			57 (13.9)			67 (19.4)		
EDB ° F (° C)	CFM	Capacity MBtuh		Total Sys. KW†	Capacity MBtuh		Total Sys. KW†	Capacity MBtuh		Total Sys. KW†	Capacity MBtuh		Total Sys. KW†	Capacity MBtuh		Total Sys. KW†	Capacity MBtuh		Total Sys. KW†	Capacity MBtuh		Total Sys. KW†	Capacity MBtuh		Total Sys. KW†
		Total	Integ*		Total	Integ*		Total	Integ*		Total	Integ*		Total	Integ*		Total	Integ*		Total	Integ*		Total	Integ*	
25HPA536A Outdoor Section With FX4CN(F,B)042 Indoor Section																									
65 (18.3)	1050	12.73	11.71	2.01	16.36	15.03	2.11	20.19	18.40	2.21	24.27	21.55	2.31	28.89	26.29	2.44	34.10	34.10	2.59	39.90	39.90	2.78	46.79	46.79	3.02
	1200	13.00	11.96	2.03	16.64	15.29	2.12	20.49	18.68	2.20	24.61	21.86	2.30	29.39	26.75	2.42	34.62	34.62	2.55	40.66	40.66	2.73	47.70	47.70	2.96
	1350	13.23	12.17	2.05	16.88	15.52	2.13	20.76	18.93	2.21	24.93	22.14	2.30	29.75	27.07	2.41	35.05	35.05	2.54	41.07	41.07	2.70	48.34	48.34	2.93
70 (21.1)	1050	12.11	11.14	2.08	15.83	14.55	2.20	19.69	17.96	2.31	23.80	21.14	2.42	28.32	25.77	2.55	33.50	33.50	2.71	39.16	39.16	2.90	45.88	45.88	3.15
	1200	12.38	11.39	2.10	16.12	14.81	2.21	20.01	18.24	2.30	24.15	21.45	2.41	28.75	26.16	2.53	34.00	34.00	2.67	39.81	39.81	2.85	46.78	46.78	3.08
	1350	12.62	11.61	2.13	16.37	15.04	2.22	20.28	18.49	2.31	24.44	21.70	2.41	29.13	26.51	2.52	34.42	34.42	2.65	40.34	40.34	2.82	47.42	47.42	3.05
75 (23.9)	1050	11.43	10.51	2.15	15.24	14.01	2.29	19.17	17.48	2.41	23.31	20.70	2.53	27.75	25.25	2.67	32.89	32.89	2.84	38.47	38.47	3.03	44.95	44.95	3.28
	1200	11.71	10.77	2.17	15.54	14.28	2.30	19.49	17.77	2.41	23.66	21.02	2.52	28.19	25.65	2.64	33.40	33.40	2.80	39.10	39.10	2.98	45.84	45.84	3.21
	1350	11.95	11.00	2.20	15.79	14.51	2.31	19.77	18.02	2.41	23.96	21.28	2.52	28.55	25.98	2.63	33.82	33.82	2.78	39.60	39.60	2.95	46.50	46.50	3.17

HEATING INDOOR MODEL	CAPACITY	POWER	FURNACE MODEL
*FX4CN(B,F)042	1.00	1.00	
FE4ANB006	0.99	0.94	
FE4ANF002	0.98	1.02	
FE4ANF003	0.97	1.00	
FE4ANF005	0.98	0.96	
FF1ENP036	1.01	1.08	
FV4BNB006	0.99	0.94	
FV4BNF002	0.98	1.02	
FV4BNF003	0.97	1.00	
FV4BNF005	0.98	0.96	
FX4CN(B,F)036	0.99	1.01	
FY4ANF036	1.01	1.08	
FY4ANF042	1.02	1.06	
CAP**3614A**	0.98	1.05	
CAP**3617A**	1.01	1.07	
CAP**3621A**	1.01	1.07	
CAP**4221A**	1.01	1.06	
CAP**4224A**	1.01	1.06	
CNPF*3618A**	1.01	1.07	
CNPH*3617A**	1.01	1.07	
CNPH*4221A**	1.01	1.06	
CNPV*3617A**	1.01	1.07	
CNPV*3621A**	1.01	1.07	
CNPV*4217A**	1.02	1.05	
CNPV*4221A**	1.01	1.06	
CSPH*3612A**	1.01	1.03	
CSPH*4212A**	1.01	1.03	
CAP**3614A**	0.98	1.04	58CV(A,X)070–12
CNPH*3617A**	0.97	1.04	58CV(A,X)070–12
CNPH*4221A**	0.98	1.01	58CV(A,X)070–12
CSPH*3612A**	0.97	1.00	58CV(A,X)070–12
CSPH*4212A**	0.98	0.99	58CV(A,X)070–12
CAP**3617A**	0.97	1.02	58CV(A,X)090–16
CNPH*3617A**	0.97	1.03	58CV(A,X)090–16
CNPH*4221A**	0.97	0.99	58CV(A,X)090–16
CNPV*3617A**	0.97	1.03	58CV(A,X)090–16
CNPV*4217A**	0.98	0.99	58CV(A,X)090–16
CSPH*3612A**	0.97	0.99	58CV(A,X)090–16
CSPH*4212A**	0.98	0.98	58CV(A,X)090–16
CAP**3621A**	0.97	1.01	58CV(A,X)110–20

HEATING INDOOR MODEL	CAPACITY	POWER	FURNACE MODEL
CAP**4221A**	0.97	1.00	58CV(A,X)110–20
CNPH*3617A**	0.97	1.03	58CV(A,X)110–20
CNPH*4221A**	0.97	0.99	58CV(A,X)110–20
CNPV*3621A**	0.97	1.02	58CV(A,X)110–20
CNPV*4221A**	0.97	0.99	58CV(A,X)110–20
CSPH*3612A**	0.97	0.98	58CV(A,X)110–20
CSPH*4212A**	0.98	0.98	58CV(A,X)110–20
CAP**4224A**	0.97	1.00	58CV(A,X)135–22
CNPH*3617A**	0.97	1.03	58CV(A,X)135–22
CNPH*4221A**	0.96	0.98	58CV(A,X)135–22
CSPH*3612A**	0.97	0.98	58CV(A,X)135–22
CSPH*4212A**	0.98	0.98	58CV(A,X)135–22
CAP**4224A**	0.97	0.99	58CV(A,X)155–22
CNPH*3617A**	0.97	1.02	58CV(A,X)155–22
CNPH*4221A**	0.96	0.97	58CV(A,X)155–22
CSPH*3612A**	0.97	0.98	58CV(A,X)155–22
CSPH*4212A**	0.98	0.97	58CV(A,X)155–22
CAP**3617A**	0.97	1.01	58MEB040–12
CNPH*3617A**	0.97	1.02	58MEB040–12
CNPH*4221A**	0.98	1.00	58MEB040–12
CNPV*3617A**	0.97	1.02	58MEB040–12
CNPV*4217A**	0.97	0.98	58MEB040–12
CSPH*3612A**	0.98	0.98	58MEB040–12
CSPH*4212A**	0.98	0.97	58MEB040–12
CAP**3617A**	0.97	1.01	58MEB060–12
CNPH*3617A**	0.97	1.02	58MEB060–12
CNPH*4221A**	0.98	1.00	58MEB060–12
CNPV*3617A**	0.97	1.02	58MEB060–12
CNPV*4217A**	0.98	0.99	58MEB060–12
CSPH*3612A**	0.98	0.98	58MEB060–12
CSPH*4212A**	0.99	0.97	58MEB060–12
CAP**3617A**	0.97	1.01	58MEB080–12
CNPH*3617A**	0.96	1.02	58MEB080–12
CNPH*4221A**	0.98	1.00	58MEB080–12
CNPV*3617A**	0.96	1.02	58MEB080–12
CNPV*4217A**	0.97	0.98	58MEB080–12
CSPH*3612A**	0.98	0.99	58MEB080–12
CSPH*4212A**	0.98	0.97	58MEB080–12
CAP**3617A**	0.97	1.01	58MEB080–16
CNPH*3617A**	0.97	1.02	58MEB080–16

HEATING INDOOR MODEL	CAPACITY	POWER	FURNACE MODEL
CNPH*4221A**	0.98	1.00	58MEB080–16
CNPV*3617A**	0.97	1.02	58MEB080–16
CNPV*4217A**	0.97	0.98	58MEB080–16
CSPH*3612A**	0.98	0.98	58MEB080–16
CSPH*4212A**	0.99	0.97	58MEB080–16
CAP**3621A**	0.96	0.99	58MEB100–20
CAP**4221A**	0.96	0.98	58MEB100–20
CNPH*3617A**	0.96	1.01	58MEB100–20
CNPH*4221A**	0.96	0.99	58MEB100–20
CNPV*3621A**	0.96	1.01	58MEB100–20
CNPV*4221A**	0.96	0.99	58MEB100–20
CSPH*3612A**	0.97	0.98	58MEB100–20
CSPH*4212A**	0.98	0.97	58MEB100–20
CNPV*4217A**	0.99	1.00	58MV(B,C)060–14
CAP**4224A**	0.98	1.02	58MVB040–14
CNPH*3617A**	0.97	1.04	58MVB040–14
CNPH*4221A**	0.97	1.01	58MVB040–14
CSPH*3612A**	0.97	1.00	58MVB040–14
CSPH*4212A**	0.97	0.99	58MVB040–14
CAP**3617A**	0.97	1.03	58MVB060–14
CNPH*3617A**	0.97	1.03	58MVB060–14
CNPH*4221A**	0.97	1.00	58MVB060–14
CNPV*3617A**	0.97	1.03	58MVB060–14
CSPH*3612A**	0.97	0.99	58MVB060–14
CSPH*4212A**	0.98	0.99	58MVB060–14
CAP**3621A**	0.97	1.03	58MVB080–14
CAP**4221A**	0.98	1.03	58MVB080–14
CNPH*3617A**	0.97	1.05	58MVB080–14
CNPH*4221A**	0.97	1.01	58MVB080–14
CNPV*3621A**	0.97	1.05	58MVB080–14
CNPV*4221A**	0.97	1.01	58MVB080–14
CSPH*3612A**	0.97	1.01	58MVB080–14
CSPH*4212A**	0.98	1.00	58MVB080–14
CAP**3621A**	0.97	1.02	58MVB080–20
CAP**4221A**	0.98	1.02	58MVB080–20
CNPH*3617A**	0.97	1.04	58MVB080–20
CNPH*4221A**	0.97	1.00	58MVB080–20
CNPV*3621A**	0.97	1.03	58MVB080–20
CNPV*4221A**	0.97	1.00	58MVB080–20
CSPH*3612A**	0.97	0.99	58MVB080–20

HEAT PUMP HEATING PERFORMANCE CONTINUED

25HPA536A Outdoor Section With FX4CN(F,B)042 Indoor Section

HEATING INDOOR MODEL	CAPACITY	POWER	FURNACE MODEL
CSPH*4212A**	0.98	0.99	58MVB080–20
CAP**3621A**	0.97	1.02	58MVB100–20
CAP**4221A**	0.98	1.01	58MVB100–20
CNPH*3617A**	0.97	1.03	58MVB100–20
CNPH*4221A**	0.97	1.00	58MVB100–20
CNPV*3621A**	0.97	1.03	58MVB100–20
CNPV*4221A**	0.97	1.00	58MVB100–20
CSPH*3612A**	0.97	0.99	58MVB100–20
CSPH*4212A**	0.98	0.98	58MVB100–20
CAP**4224A**	0.97	1.01	58MVB120–20
CNPH*3617A**	0.97	1.03	58MVB120–20
CNPH*4221A**	0.97	1.00	58MVB120–20
CSPH*3612A**	0.97	0.99	58MVB120–20
CSPH*4212A**	0.98	0.99	58MVB120–20
CAP**3614A**	0.99	1.07	58PH*045–08
CNPH*3617A**	0.99	1.07	58PH*045–08
CNPH*4221A**	0.99	1.05	58PH*045–08
CSPH*3612A**	1.00	1.03	58PH*045–08
CSPH*4212A**	1.01	1.03	58PH*045–08
CAP**3617A**	0.98	1.04	58PH*070–16
CNPH*3617A**	0.98	1.05	58PH*070–16
CNPH*4221A**	0.97	1.01	58PH*070–16
CNPV*3617A**	0.98	1.05	58PH*070–16
CNPV*4217A**	0.99	1.02	58PH*070–16
CSPH*3612A**	0.99	1.01	58PH*070–16
CSPH*4212A**	0.99	1.00	58PH*070–16
CAP**3621A**	0.98	1.00	58PH*090–16
CAP**4221A**	0.98	0.99	58PH*090–16
CNPH*3617A**	0.97	1.02	58PH*090–16
CNPH*4221A**	0.98	1.00	58PH*090–16
CNPV*3621A**	0.97	1.01	58PH*090–16
CNPV*4221A**	0.98	1.00	58PH*090–16
CSPH*3612A**	0.98	0.98	58PH*090–16
CSPH*4212A**	0.99	0.97	58PH*090–16
CAP**3621A**	0.98	0.99	58PH*110–20
CAP**4221A**	0.98	0.99	58PH*110–20
CNPH*3617A**	0.97	1.01	58PH*110–20
CNPH*4221A**	0.98	0.99	58PH*110–20
CNPV*3621A**	0.97	1.01	58PH*110–20
CNPV*4221A**	0.98	0.99	58PH*110–20
CSPH*3612A**	0.99	0.98	58PH*110–20
CSPH*4212A**	0.99	0.96	58PH*110–20

See notes on pg. 42

HEAT PUMP HEATING PERFORMANCE CONTINUED

INDOOR AIR		OUTDOOR COIL ENTERING AIR TEMPERATURES °F (°C)																							
		−3 (−19.4)			7 (−13.9)			17 (−8.3)			27 (−2.8)			37 (2.8)			47 (8.3)			57 (13.9)			67 (19.4)		
EDB °F (°C)	CFM	Capacity MBtuh		Total Sys. KW†	Capacity MBtuh		Total Sys. KW†	Capacity MBtuh		Total Sys. KW†	Capacity MBtuh		Total Sys. KW†	Capacity MBtuh		Total Sys. KW†	Capacity MBtuh		Total Sys. KW†	Capacity MBtuh		Total Sys. KW†	Capacity MBtuh		Total Sys. KW†
		Total	Integ*		Total	Integ*		Total	Integ*		Total	Integ*		Total	Integ*		Total	Integ*		Total	Integ*		Total	Integ*	
25HPA442A Outdoor Section With FX4CN(F,B)048 Indoor Section																									
65 (18.3)	1225	17.51	16.11	2.61	21.68	19.93	2.72	26.12	23.81	2.82	30.84	27.39	2.92	36.07	32.82	3.02	42.07	42.07	3.15	49.15	49.15	3.26	56.23	56.23	3.40
	1400	17.82	16.39	2.63	22.00	20.22	2.73	26.48	24.14	2.82	31.24	27.74	2.90	36.67	33.37	2.99	42.75	42.75	3.10	49.67	49.67	3.17	56.36	56.36	3.29
	1575	18.09	16.64	2.66	22.29	20.49	2.75	26.79	24.43	2.83	31.58	28.05	2.90	37.21	33.86	2.99	43.32	43.32	3.06	49.85	49.85	3.13	54.94	54.94	3.20
70 (21.1)	1225	16.92	15.57	2.69	21.13	19.42	2.81	25.60	23.34	2.92	30.33	26.94	3.03	35.45	32.26	3.15	41.36	41.36	3.29	48.29	48.29	3.42	55.48	55.48	3.57
	1400	17.23	15.85	2.71	21.47	19.73	2.82	25.97	23.68	2.92	30.74	27.30	3.02	35.96	32.73	3.12	42.00	42.00	3.24	49.04	49.04	3.33	55.79	55.79	3.46
	1575	17.50	16.10	2.74	21.76	20.00	2.84	26.28	23.97	2.93	31.08	27.61	3.02	36.39	33.12	3.11	42.55	42.55	3.21	49.31	49.31	3.28	55.09	55.09	3.37
75 (23.9)	1225	16.28	14.98	2.76	20.53	18.86	2.90	25.03	22.82	3.02	29.79	26.46	3.15	34.85	31.71	3.28	40.67	40.67	3.43	47.39	47.39	3.59	54.79	54.79	3.74
	1400	16.59	15.26	2.79	20.87	19.18	2.91	25.42	23.17	3.03	30.21	26.83	3.14	35.34	32.16	3.25	41.28	41.28	3.38	48.28	48.28	3.49	55.14	55.14	3.63
	1575	16.87	15.52	2.82	21.17	19.45	2.93	25.75	23.47	3.04	30.56	27.14	3.14	35.77	32.55	3.24	41.81	41.81	3.35	48.73	48.73	3.44	55.30	55.30	3.56

HEATING INDOOR MODEL	CAPACITY	POWER	FURNACE MODEL
*FX4CN(B,F)048	1.00	1.00	
FE4ANB006	0.99	0.97	
FE4ANF003	0.96	1.04	
FE4ANF005	0.98	0.99	
FV4BNB006	0.99	0.97	
FV4BNF003	0.96	1.04	
FV4BNF005	0.98	0.99	
FX4CN(B,F)042	0.99	1.02	
FY4ANF042	1.00	1.07	
FY4ANF048	1.00	1.05	
CAP**4221A**	1.00	1.08	
CAP**4224A**	1.00	1.08	
CAP**4817A**	1.00	1.03	
CAP**4821A**	1.00	1.04	
CAP**4824A**	1.00	1.04	
CNPF*4818A**	0.99	1.05	
CNPH*4221A**	1.00	1.08	
CNPH*4821A**	1.00	1.04	
CNPV*4217A**	1.00	1.06	
CNPV*4221A**	1.00	1.08	
CNPV*4821A**	1.00	1.04	
CNPV*4824A**	1.00	1.04	
CSPH*4212A**	1.00	1.04	
CSPH*4812A**	1.00	1.03	
CNPH*4221A**	0.96	1.04	58CV(A,X)070−12
CNPH*4821A**	0.98	1.03	58CV(A,X)070−12
CSPH*4212A**	0.96	1.02	58CV(A,X)070−12
CSPH*4812A**	0.98	1.03	58CV(A,X)070−12
CAP**4817A**	0.98	1.01	58CV(A,X)090−16
CNPH*4221A**	0.96	1.03	58CV(A,X)090−16
CNPH*4821A**	0.98	1.02	58CV(A,X)090−16
CNPV*4217A**	0.98	1.04	58CV(A,X)090−16
CSPH*4212A**	0.96	1.01	58CV(A,X)090−16
CSPH*4812A**	0.98	1.01	58CV(A,X)090−16
CAP**4221A**	0.96	1.04	58CV(A,X)110−20
CAP**4821A**	0.98	1.02	58CV(A,X)110−20
CNPH*4221A**	0.96	1.02	58CV(A,X)110−20
CNPH*4821A**	0.98	1.01	58CV(A,X)110−20
CNPV*4221A**	0.96	1.02	58CV(A,X)110−20
CNPV*4821A**	0.98	1.01	58CV(A,X)110−20

HEATING INDOOR MODEL	CAPACITY	POWER	FURNACE MODEL
CSPH*4212A**	0.96	1.00	58CV(A,X)110−20
CSPH*4812A**	0.98	1.01	58CV(A,X)110−20
CAP**4224A**	0.96	1.03	58CV(A,X)135−22
CAP**4824A**	0.98	1.01	58CV(A,X)135−22
CNPH*4221A**	0.96	1.02	58CV(A,X)135−22
CNPH*4821A**	0.98	1.01	58CV(A,X)135−22
CNPV*4824A**	0.98	1.01	58CV(A,X)135−22
CSPH*4212A**	0.96	1.00	58CV(A,X)135−22
CSPH*4812A**	0.98	1.00	58CV(A,X)135−22
CAP**4224A**	0.96	1.03	58CV(A,X)155−22
CAP**4824A**	0.98	1.01	58CV(A,X)155−22
CNPH*4221A**	0.96	1.02	58CV(A,X)155−22
CNPH*4821A**	0.98	1.01	58CV(A,X)155−22
CNPV*4824A**	0.98	1.01	58CV(A,X)155−22
CSPH*4212A**	0.96	1.00	58CV(A,X)155−22
CSPH*4812A**	0.98	1.00	58CV(A,X)155−22
CAP**4817A**	0.99	1.01	58MEB040−12
CNPH*4221A**	0.98	1.04	58MEB040−12
CNPH*4821A**	0.99	1.01	58MEB040−12
CNPV*4217A**	0.98	1.03	58MEB040−12
CSPH*4212A**	0.99	1.02	58MEB040−12
CSPH*4812A**	0.99	1.01	58MEB040−12
CAP**4817A**	0.99	1.01	58MEB060−12
CNPH*4221A**	0.98	1.05	58MEB060−12
CNPH*4821A**	0.99	1.02	58MEB060−12
CNPV*4217A**	0.99	1.04	58MEB060−12
CSPH*4212A**	0.99	1.02	58MEB060−12
CSPH*4812A**	0.99	1.01	58MEB060−12
CAP**4817A**	0.99	1.01	58MEB080−12
CNPH*4221A**	0.98	1.05	58MEB080−12
CNPH*4821A**	0.99	1.01	58MEB080−12
CNPV*4217A**	0.98	1.03	58MEB080−12
CNPV*4821A**	0.99	1.01	58MEB080−12
CSPH*4212A**	0.99	1.02	58MEB080−12
CSPH*4812A**	0.99	1.01	58MEB080−12
CAP**4817A**	0.99	1.02	58MEB080−16
CNPH*4221A**	0.98	1.05	58MEB080−16
CNPH*4821A**	0.98	1.01	58MEB080−16
CNPV*4217A**	0.98	1.04	58MEB080−16
CNPV*4821A**	0.98	1.01	58MEB080−16

HEATING INDOOR MODEL	CAPACITY	POWER	FURNACE MODEL
CSPH*4212A**	0.98	1.01	58MEB080−16
CSPH*4812A**	0.99	1.02	58MEB080−16
CAP**4221A**	0.96	1.02	58MEB100−20
CAP**4821A**	0.98	1.00	58MEB100−20
CNPH*4221A**	0.96	1.03	58MEB100−20
CNPH*4821A**	0.98	1.00	58MEB100−20
CNPV*4221A**	0.96	1.03	58MEB100−20
CNPV*4821A**	0.98	1.00	58MEB100−20
CSPH*4212A**	0.98	1.00	58MEB100−20
CSPH*4812A**	0.98	1.00	58MEB100−20
CAP**4224A**	0.96	1.01	58MEB120−20
CAP**4824A**	0.98	0.99	58MEB120−20
CNPH*4221A**	0.96	1.02	58MEB120−20
CNPH*4821A**	0.98	0.99	58MEB120−20
CNPV*4824A**	0.98	0.99	58MEB120−20
CSPH*4212A**	0.98	1.00	58MEB120−20
CSPH*4812A**	0.98	0.99	58MEB120−20
CNPV*4217A**	0.99	1.04	58MV(B,C)060−14
CAP**4224A**	0.96	1.06	58MVB040−14
CAP**4824A**	0.98	1.04	58MVB040−14
CNPH*4221A**	0.96	1.04	58MVB040−14
CNPH*4821A**	0.98	1.03	58MVB040−14
CNPV*4824A**	0.98	1.03	58MVB040−14
CSPH*4212A**	0.96	1.02	58MVB040−14
CSPH*4812A**	0.98	1.03	58MVB040−14
CAP**4817A**	0.99	1.03	58MVB060−14
CNPH*4221A**	0.96	1.04	58MVB060−14
CNPH*4821A**	0.98	1.02	58MVB060−14
CSPH*4212A**	0.96	1.01	58MVB060−14
CSPH*4812A**	0.98	1.02	58MVB060−14
CAP**4221A**	0.96	1.06	58MVB080−14
CAP**4821A**	0.98	1.04	58MVB080−14
CNPH*4221A**	0.96	1.05	58MVB080−14
CNPH*4821A**	0.98	1.04	58MVB080−14
CNPV*4221A**	0.96	1.05	58MVB080−14
CNPV*4821A**	0.96	1.02	58MVB080−14
CSPH*4212A**	0.96	1.03	58MVB080−14
CSPH*4812A**	0.98	1.03	58MVB080−14
CAP**4221A**	0.96	1.05	58MVB080−20
CAP**4821A**	0.98	1.03	58MVB080−20

HEAT PUMP HEATING PERFORMANCE CONTINUED

25HPA442A Outdoor Section With FX4CN(F,B)048 Indoor Section

HEATING INDOOR MODEL	CAPACITY	POWER	FURNACE MODEL
CNPH*4221A**	0.96	1.04	58MVB080–20
CNPH*4821A**	0.98	1.03	58MVB080–20
CNPV*4221A**	0.96	1.04	58MVB080–20
CNPV*4821A**	0.96	1.01	58MVB080–20
CSPH*4212A**	0.96	1.01	58MVB080–20
CSPH*4812A**	0.98	1.02	58MVB080–20
CAP**4221A**	0.96	1.04	58MVB100–20
CAP**4821A**	0.98	1.02	58MVB100–20
CNPH*4221A**	0.96	1.03	58MVB100–20
CNPH*4821A**	0.98	1.02	58MVB100–20
CNPV*4221A**	0.96	1.03	58MVB100–20
CNPV*4821A**	0.98	1.02	58MVB100–20
CSPH*4212A**	0.96	1.01	58MVB100–20
CSPH*4812A**	0.98	1.01	58MVB100–20
CAP**4224A**	0.96	1.04	58MVB120–20
CAP**4824A**	0.98	1.02	58MVB120–20
CNPH*4221A**	0.96	1.03	58MVB120–20
CNPH*4821A**	0.98	1.02	58MVB120–20
CNPV*4824A**	0.98	1.02	58MVB120–20
CSPH*4212A**	0.96	1.01	58MVB120–20
CSPH*4812A**	0.98	1.02	58MVB120–20
CAP**4817A**	1.00	1.05	58PH*070–16
CNPH*4221A**	0.99	1.08	58PH*070–16
CNPH*4821A**	1.00	1.05	58PH*070–16
CNPV*4217A**	0.99	1.07	58PH*070–16
CSPH*4212A**	1.00	1.06	58PH*070–16
CSPH*4812A**	1.00	1.05	58PH*070–16
CAP**4221A**	0.96	1.03	58PH*090–16
CAP**4821A**	0.98	1.01	58PH*090–16
CNPH*4221A**	0.96	1.04	58PH*090–16
CNPH*4821A**	0.98	1.00	58PH*090–16
CNPV*4221A**	0.96	1.04	58PH*090–16
CNPV*4821A**	0.98	1.00	58PH*090–16
CSPH*4212A**	0.98	1.01	58PH*090–16
CSPH*4812A**	0.98	1.00	58PH*090–16
CAP**4221A**	0.96	1.02	58PH*110–20
CAP**4821A**	0.98	1.00	58PH*110–20
CNPH*4221A**	0.96	1.03	58PH*110–20
CNPH*4821A**	0.98	1.00	58PH*110–20
CNPV*4221A**	0.96	1.03	58PH*110–20
CNPV*4821A**	0.98	1.00	58PH*110–20
CSPH*4212A**	0.98	1.00	58PH*110–20
CSPH*4812A**	0.98	1.00	58PH*110–20
CAP**4224A**	0.96	1.02	58PH*135–20
CAP**4824A**	0.98	1.00	58PH*135–20
CNPH*4221A**	0.96	1.04	58PH*135–20
CNPH*4821A**	0.98	1.00	58PH*135–20
CNPV*4824A**	0.98	1.00	58PH*135–20
CSPH*4212A**	0.98	1.01	58PH*135–20
CSPH*4812A**	0.98	1.00	58PH*135–20

See notes on pg. 42

HEAT PUMP HEATING PERFORMANCE CONTINUED

INDOOR AIR		OUTDOOR COIL ENTERING AIR TEMPERATURES °F (°C)																							
		−3 (−19.4)			7 (−13.9)			17 (−8.3)			27 (−2.8)			37 (2.8)			47 (8.3)			57 (13.9)			67 (19.4)		
EDB °F (°C)	CFM	Capacity MBtuh		Total Sys. KW†	Capacity MBtuh		Total Sys. KW†	Capacity MBtuh		Total Sys. KW†	Capacity MBtuh		Total Sys. KW†	Capacity MBtuh		Total Sys. KW†	Capacity MBtuh		Total Sys. KW†	Capacity MBtuh		Total Sys. KW†	Capacity MBtuh		Total Sys. KW†
		Total	Integ*		Total	Integ*		Total	Integ*		Total	Integ*		Total	Integ*		Total	Integ*		Total	Integ*		Total	Integ*	
25HPA548 Outdoor Section With FX4CN(B,F)060 Indoor Section																									
65 (18.3)	1400	19.69	18.11	2.82	24.41	22.43	2.93	29.51	26.90	3.04	34.97	31.06	3.17	41.16	37.46	3.31	48.07	48.07	3.49	56.26	56.26	3.65	64.39	64.39	3.87
	1600	20.02	18.42	2.84	24.78	22.77	2.94	29.90	27.26	3.04	35.42	31.46	3.15	41.95	38.18	3.28	48.79	48.79	3.42	56.62	56.62	3.55	63.76	63.76	3.72
	1800	20.32	18.70	2.87	25.10	23.06	2.96	30.25	27.58	3.05	35.81	31.80	3.15	42.18	38.39	3.26	49.44	49.44	3.36	56.68	56.68	3.50	60.92	60.92	3.57
70 (21.1)	1400	19.11	17.58	2.94	23.86	21.93	3.07	28.97	26.41	3.19	34.44	30.59	3.33	40.40	36.76	3.48	47.29	47.29	3.66	55.36	55.36	3.84	63.52	63.52	4.07
	1600	19.44	17.89	2.97	24.23	22.27	3.08	29.38	26.79	3.19	34.90	31.00	3.31	40.96	37.28	3.44	48.00	48.00	3.60	55.94	55.94	3.74	63.60	63.60	3.93
	1800	19.74	18.16	3.00	24.56	22.56	3.10	29.74	27.11	3.19	35.29	31.34	3.30	41.54	37.80	3.42	48.61	48.61	3.55	56.13	56.13	3.68	61.85	61.85	3.80
75 (23.9)	1400	18.48	17.00	3.07	23.28	21.39	3.20	28.42	25.91	3.34	33.90	30.11	3.49	39.79	36.21	3.65	46.55	46.55	3.84	54.42	54.42	4.05	62.75	62.75	4.27
	1600	18.82	17.31	3.09	23.65	21.74	3.21	28.83	26.29	3.34	34.36	30.52	3.47	40.31	36.69	3.61	47.23	47.23	3.78	55.26	55.26	3.93	62.98	62.98	4.13
	1800	19.12	17.59	3.13	23.98	22.04	3.24	29.19	26.61	3.34	34.75	30.87	3.46	40.79	37.12	3.59	47.81	47.81	3.74	55.52	55.52	3.87	62.23	62.23	4.02

HEATING INDOOR MODEL	CAPACITY	POWER	FURNACE MODEL
*FX4CN(B,F)060	1.00	1.00	
FE4ANB006	0.98	0.99	
FE4ANF005	0.98	1.03	
FV4BNB006	0.98	0.99	
FV4BNF005	0.98	1.03	
FX4CN(B,F)048	1.00	1.03	
FX4CN(B,F)048	1.00	1.04	
FY4ANB060	1.00	1.05	
FY4ANF048	1.00	1.08	
CAP**4817A**	0.99	1.07	
CAP**4821A**	1.00	1.07	
CAP**4824A**	1.00	1.07	
CAP**6021A**	1.00	1.05	
CAP**6024A**	1.00	1.05	
CNPF*4818A**	0.98	1.09	
CNPH*4821A**	1.00	1.07	
CNPH*6024A**	1.00	1.06	
CNPV*4821A**	1.00	1.07	
CNPV*4824A**	1.00	1.07	
CNPV*6024A**	1.00	1.06	
CSPH*4812A**	1.00	1.06	
CSPH*6012A**	1.00	1.04	
CAP**4817A**	0.98	1.05	58CV(A,X)090−16
CNPH*4821A**	0.98	1.06	58CV(A,X)090−16
CNPH*6024A**	0.98	1.05	58CV(A,X)090−16
CSPH*4812A**	0.98	1.06	58CV(A,X)090−16
CSPH*6012A**	0.98	1.04	58CV(A,X)090−16
CAP**4821A**	0.98	1.06	58CV(A,X)110−20
CAP**6021A**	0.98	1.04	58CV(A,X)110−20
CNPH*4821A**	0.98	1.06	58CV(A,X)110−20
CNPH*6024A**	0.98	1.04	58CV(A,X)110−20
CNPV*4821A**	0.98	1.06	58CV(A,X)110−20
CSPH*4812A**	0.98	1.05	58CV(A,X)110−20
CSPH*6012A**	0.98	1.03	58CV(A,X)110−20
CAP**4824A**	0.98	1.05	58CV(A,X)135−22
CAP**6024A**	0.98	1.03	58CV(A,X)135−22
CNPH*4821A**	0.98	1.05	58CV(A,X)135−22
CNPH*6024A**	0.98	1.03	58CV(A,X)135−22
CNPV*4824A**	0.98	1.05	58CV(A,X)135−22
CNPV*6024A**	0.98	1.03	58CV(A,X)135−22
CSPH*4812A**	0.98	1.04	58CV(A,X)135−22
CSPH*6012A**	0.98	1.02	58CV(A,X)135−22
CAP**4824A**	0.98	1.04	58CV(A,X)155−22
CAP**6024A**	0.98	1.02	58CV(A,X)155−22

HEATING INDOOR MODEL	CAPACITY	POWER	FURNACE MODEL
CNPH*4821A**	0.98	1.04	58CV(A,X)155−22
CNPH*6024A**	0.98	1.03	58CV(A,X)155−22
CNPV*4824A**	0.98	1.04	58CV(A,X)155−22
CNPV*6024A**	0.98	1.03	58CV(A,X)155−22
CSPH*4812A**	0.98	1.03	58CV(A,X)155−22
CSPH*6012A**	0.98	1.01	58CV(A,X)155−22
CAP**4817A**	1.00	1.07	58MEB080−16
CNPH*4821A**	0.99	1.06	58MEB080−16
CNPH*6024A**	0.99	1.05	58MEB080−16
CSPH*4812A**	0.99	1.06	58MEB080−16
CSPH*6012A**	1.00	1.04	58MEB080−16
CAP**4821A**	0.98	1.04	58MEB100−20
CAP**6021A**	0.99	1.03	58MEB100−20
CNPH*4821A**	0.98	1.04	58MEB100−20
CNPH*6024A**	0.99	1.04	58MEB100−20
CNPV*4821A**	0.98	1.04	58MEB100−20
CSPH*4812A**	0.98	1.04	58MEB100−20
CSPH*6012A**	0.99	1.02	58MEB100−20
CAP**4824A**	0.98	1.03	58MEB120−20
CAP**6024A**	0.99	1.03	58MEB120−20
CNPH*4821A**	0.98	1.03	58MEB120−20
CNPH*6024A**	0.99	1.03	58MEB120−20
CNPV*4824A**	0.98	1.03	58MEB120−20
CNPV*6024A**	0.99	1.03	58MEB120−20
CSPH*4812A**	0.98	1.03	58MEB120−20
CSPH*6012A**	0.99	1.01	58MEB120−20
CAP**4821A**	0.98	1.07	58MVB080−20
CAP**6021A**	0.99	1.06	58MVB080−20
CNPH*4821A**	0.98	1.07	58MVB080−20
CNPH*6024A**	0.98	1.06	58MVB080−20
CNPV*4821A**	0.98	1.07	58MVB080−20
CSPH*4812A**	0.98	1.06	58MVB080−20
CSPH*6012A**	0.98	1.04	58MVB080−20
CAP**4821A**	0.98	1.07	58MVB100−20
CAP**6021A**	0.98	1.05	58MVB100−20
CNPH*4821A**	0.98	1.07	58MVB100−20
CNPH*6024A**	0.98	1.05	58MVB100−20
CNPV*4821A**	0.98	1.07	58MVB100−20
CSPH*4812A**	0.98	1.06	58MVB100−20
CSPH*6012A**	0.98	1.04	58MVB100−20
CAP**4824A**	0.98	1.07	58MVB120−20
CAP**6024A**	0.98	1.05	58MVB120−20
CNPH*4821A**	0.98	1.07	58MVB120−20
CNPH*6024A**	0.98	1.05	58MVB120−20

HEATING INDOOR MODEL	CAPACITY	POWER	FURNACE MODEL
CNPV*4824A**	0.98	1.07	58MVB120−20
CNPV*6024A**	0.98	1.05	58MVB120−20
CSPH*4812A**	0.98	1.06	58MVB120−20
CSPH*6012A**	0.98	1.04	58MVB120−20
CAP**4821A**	0.98	1.05	58PH*090−16
CAP**6021A**	0.99	1.04	58PH*090−16
CNPH*4821A**	0.98	1.05	58PH*090−16
CNPH*6024A**	0.99	1.04	58PH*090−16
CNPV*4821A**	0.98	1.05	58PH*090−16
CSPH*4812A**	0.99	1.05	58PH*090−16
CSPH*6012A**	0.99	1.03	58PH*090−16
CAP**4821A**	0.98	1.05	58PH*110−20
CAP**6021A**	0.98	1.02	58PH*110−20
CNPH*4821A**	0.98	1.04	58PH*110−20
CNPH*6024A**	0.98	1.02	58PH*110−20
CNPV*4821A**	0.98	1.04	58PH*110−20
CSPH*4812A**	0.98	1.04	58PH*110−20
CSPH*6012A**	0.99	1.02	58PH*110−20
CAP**4824A**	0.98	1.05	58PH*135−20
CAP**6024A**	0.99	1.04	58PH*135−20
CNPH*4821A**	0.98	1.05	58PH*135−20
CNPH*6024A**	0.99	1.04	58PH*135−20
CNPV*4824A**	0.98	1.05	58PH*135−20
CNPV*6024A**	0.99	1.04	58PH*135−20
CSPH*4812A**	0.98	1.04	58PH*135−20
CSPH*6012A**	0.99	1.02	58PH*135−20

See notes on pg. 42

HEAT PUMP HEATING PERFORMANCE CONTINUED

INDOOR AIR		OUTDOOR COIL ENTERING AIR TEMPERATURES ° F (° C)																							
		–3 (–19.4)			7 (–13.9)			17 (–8.3)			27 (–2.8)			37 (2.8)			47 (8.3)			57 (13.9)			67 (19.4)		
EDB ° F (° C)	CFM	Capacity MBtuh		Total Sys. KW†	Capacity MBtuh		Total Sys. KW†	Capacity MBtuh		Total Sys. KW†	Capacity MBtuh		Total Sys. KW†	Capacity MBtuh		Total Sys. KW†	Capacity MBtuh		Total Sys. KW†	Capacity MBtuh		Total Sys. KW†	Capacity MBtuh		Total Sys. KW†
		Total	Integ*		Total	Integ*		Total	Integ*		Total	Integ*		Total	Integ*		Total	Integ*		Total	Integ*		Total	Integ*	
25HPA560 Outdoor Section With FX4CN(B,F)060 Indoor Section																									
65 (18.3)	1750	24.99	22.99	3.62	30.83	28.34	3.78	37.07	33.80	3.96	43.79	38.90	4.15	51.56	46.92	4.38	59.84	59.84	4.58	68.28	68.28	4.84	76.88	76.88	5.13
	2000	25.40	23.37	3.65	31.28	28.74	3.80	37.55	34.24	3.96	44.33	39.38	4.13	52.34	47.63	4.31	60.16	60.16	4.50	68.33	68.33	4.73	72.33	72.33	4.83
	2250	25.78	23.71	3.70	31.68	29.11	3.83	37.97	34.62	3.98	44.81	39.79	4.13	52.87	48.11	4.29	60.25	60.25	4.46	66.63	66.63	4.62	68.64	68.64	4.65
70 (21.1)	1750	24.27	22.33	3.78	30.17	27.72	3.96	36.47	33.25	4.15	43.16	38.33	4.35	50.64	46.08	4.59	59.11	59.11	4.80	67.51	67.51	5.08	76.18	76.18	5.38
	2000	24.69	22.72	3.82	30.63	28.14	3.98	36.95	33.69	4.15	43.70	38.82	4.33	51.40	46.77	4.54	59.50	59.50	4.72	67.69	67.69	4.96	72.89	72.89	5.11
	2250	25.07	23.06	3.86	31.03	28.52	4.01	37.38	34.08	4.16	44.18	39.24	4.33	52.03	47.35	4.50	59.70	59.70	4.68	67.37	67.37	4.89	69.59	69.59	4.92
75 (23.9)	1750	23.50	21.62	3.95	29.47	27.08	4.14	35.81	32.65	4.35	42.51	37.76	4.56	49.82	45.34	4.80	58.37	58.37	5.03	66.70	66.70	5.32	75.55	75.55	5.65
	2000	23.93	22.01	3.99	29.93	27.50	4.16	36.31	33.11	4.34	43.06	38.24	4.54	50.53	45.98	4.76	58.80	58.80	4.95	66.99	66.99	5.20	73.13	73.13	5.39
	2250	24.31	22.37	4.03	30.34	27.88	4.19	36.75	33.51	4.36	43.53	38.66	4.54	51.16	46.55	4.72	59.08	59.08	4.91	67.02	67.02	5.13	70.23	70.23	5.20

HEATING INDOOR MODEL	CAPACITY	POWER	FURNACE MODEL
*FX4CN(B,F)060	1.00	1.00	
FE4ANB006	0.99	1.00	
FV4BNB006	0.99	1.00	
FY4ANB060	1.01	1.06	
CAP**6021A**	0.99	1.05	
CAP**6024A**	1.01	1.05	
CNPH*6024A**	1.01	1.05	
CNPV*6024A**	1.01	1.05	
CSPH*6012A**	1.01	1.03	
CAP**6021A**	0.99	1.05	58CV(A,X)110–20
CNPH*6024A**	0.98	1.05	58CV(A,X)110–20
CSPH*6012A**	0.98	1.03	58CV(A,X)110–20
CAP**6024A**	0.99	1.05	58CV(A,X)135–22

HEATING INDOOR MODEL	CAPACITY	POWER	FURNACE MODEL
CNPH*6024A**	0.99	1.05	58CV(A,X)135–22
CNPV*6024A**	0.99	1.05	58CV(A,X)135–22
CSPH*6012A**	0.98	1.02	58CV(A,X)135–22
CAP**6024A**	0.98	1.03	58CV(A,X)155–22
CNPH*6024A**	0.99	1.05	58CV(A,X)155–22
CNPV*6024A**	0.99	1.05	58CV(A,X)155–22
CSPH*6012A**	0.98	1.01	58CV(A,X)155–22
CNPH*6024A**	0.99	1.09	58MEB080–16
CSPH*6012A**	0.99	1.06	58MEB080–16
CAP**6021A**	0.98	1.04	58MEB100–20
CNPH*6024A**	0.99	1.06	58MEB100–20
CSPH*6012A**	0.99	1.04	58MEB100–20
CAP**6024A**	0.98	1.04	58MEB120–20

HEATING INDOOR MODEL	CAPACITY	POWER	FURNACE MODEL
CNPH*6024A**	0.99	1.06	58MEB120–20
CNPV*6024A**	0.99	1.06	58MEB120–20
CSPH*6012A**	0.99	1.03	58MEB120–20
CAP**6021A**	0.98	1.05	58PH*090–16
CNPH*6024A**	0.99	1.07	58PH*090–16
CSPH*6012A**	1.00	1.05	58PH*090–16
CAP**6021A**	0.98	1.03	58PH*110–20
CNPH*6024A**	0.99	1.05	58PH*110–20
CSPH*6012A**	1.00	1.03	58PH*110–20
CAP**6024A**	0.98	1.05	58PH*135–20
CNPH*6024A**	0.99	1.06	58PH*135–20
CNPV*6024A**	0.99	1.06	58PH*135–20
CSPH*6012A**	1.00	1.04	58PH*135–20

* Tested combination.

† The kW values include the compressor, outdoor fan motor, and indoor blower motor. The kW from supplement heaters should be added to these values to obtain total system kilowatts.

‡The Btuh heating capacity values shown are net integrated values from which the defrost effect has been subtracted. The Btuh heating from supplement heaters should be added to those values to obtain total system capacity.

NOTE: When the required data falls between the published data, interpolation may be performed. Extrapolation is not an acceptable practice.

EDB — Entering Dry Bulb

GUIDE SPECIFICTIONS

GENERAL

System Description

Outdoor-mounted, air-cooled, split-system heat pump unit suitable for ground or rooftop installation. Unit consists of a hermetic compressor, an air-cooled coil, propeller-type condenser fan, and a control box. Unit will discharge supply air upward as shown on contract drawings. Unit will be used in a refrigeration circuit to match up to a packaged fan coil or coil unit.

Quality Assurance

— Unit will be rated in accordance with the latest edition of ARI Standard 240.

— Unit will be certified for capacity and efficiency, and listed in the latest ARI directory.

— Unit construction will comply with latest edition of ANSI/ ASHRAE and with NEC.

— Unit will be constructed in accordance with UL standards and will carry the UL label of approval. Unit will have C-UL approval.

— Unit cabinet will be capable of withstanding Federal Test Method Standard No. 141 (Method 6061) 500-hr salt spray test.

— Air-cooled condenser coils are pressure tested and the outdoor units are leak tested.

— Unit constructed in ISO9001 approved facility.

Delivery, Storage, and Handling

— Unit will be shipped as single package only and is stored and handled per unit manufacturer's recommendations.

Warranty (for inclusion by specifying engineer)

— U.S. and Canada only.

PRODUCTS

Equipment

— Factory-assembled, single-piece, air-cooled heat pump unit. Contained within the unit enclosure is all factory wiring, piping, controls, compressor, refrigerant charge Puron® (R-410A), and special features required prior to field start-up.

Unit Cabinet

— Unit cabinet will be constructed of galvanized steel, bonderized, and coated with a powder coat paint.

Fans

— Condenser fan will be direct-drive propeller type, discharging air upward.

— Condenser fan motors will be totally enclosed, 1-phase type with class B insulation and permanently lubricated bearings.

— Shafts will be corrosion resistant.

— Fan blades will be statically and dynamically balanced.

— Condenser fan openings will be equipped with steel wire safety guards.

Compressor

— Compressor will be hermetically sealed.

— Compressor will be mounted on rubber vibration isolators.

Condenser Coil

— Condenser coil will be air cooled.

— Coil will be constructed of aluminum fins mechanically bonded to copper tubes which are then cleaned, dehydrated, and sealed.

Refrigeration Components

— Refrigeration circuit components will include liquid-line shutoff valve with sweat connections, vapor-line shutoff valve with sweat connections, system charge of Puron® (R-410A) refrigerant, POE compressor oil, accumulator, and reversing valve.

Operating Characteristics

— The capacity of the unit will meet or exceed _____ Btuh at a suction temperature of _____°F/°C. The power consumption at full load will not exceed _____ kW.

— Combination of the unit and the evaporator or fan coil unit will have a total net cooling capacity of _____ Btuh or greater at conditions of _____ CFM entering air temperature at the evaporator at _____ °F/°C wet bulb and _____ °F/°C dry bulb, and air entering the unit at _____ °F/°C.

— The system will have a SEER of _____ Btuh/watt or greater at DOE conditions.

Electrical Requirements

— Nominal unit electrical characteristics will be _____ v, single phase, 60 hz. The unit will be capable of satisfactory operation within voltage limits of _____ v to _____ v.

— Unit electrical power will be single point connection.

— Control circuit will be 24v.

Special Features

— Refer to section of this literature identifying accessories and descriptions for specific features and available enhancements.

Copyright 2008 Carrier Corp. • 7310 W. Morris St. • Indianapolis, IN 46231

Printed in U.S.A. edition date: 09/08

Catalog No: 25HPA5–3PD

Manufacturer reserves the right to change, at any time, specifications and designs without notice and without obligations.

Replaces: 25HPA5–2PD