37MURA
Residential Single Zone Heat Pump System
Sizes 18K to 60K

INSTALLATION MANUAL

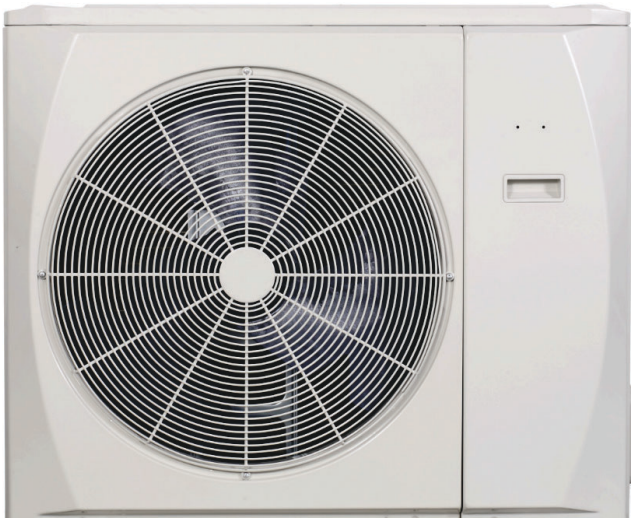

Fig. 1 —Sizes 18K to 60K

NOTES: Read the entire instruction manual before starting the installation.
Images are for illustration purposes only. Actual models may differ slightly.

TABLE OF CONTENTS

PAGE

SAFETY CONSIDERATIONS 1
ACCESSORIES 7
DIMENSIONS 8
REFRIGERANT PIPING CONNECTION 12
REFRIGERANT PIPING CONNECTION INSTRUCTIONS 13
OUTDOOR UNIT INSTALLATION 14
CLEARANCES 16
WIRING PRECAUTIONS 18
OUTDOOR UNIT WIRING 19
SPECIFIC WIRING METHODS 20
WIRING DIAGRAMS 23
OUTDOOR UNIT DIP SWITCH SETTING 28
SPECIFICATIONS 29
EVACUATE COIL AND TUBING SYSTEM 29
ADDING REFRIGERANT 30
TEST RUN 30
TROUBLESHOOTING 31
CROSSOVER START-UP CHECKLIST 32

SAFETY CONSIDERATIONS

Installing, starting up, and servicing air-conditioning equipment can be hazardous due to system pressures, electrical components, and equipment location (roofs, elevated structures, etc.).

Only trained, qualified installers and service mechanics should install, start-up, and service this equipment.

Untrained personnel can perform basic maintenance functions such as coil cleaning. All other operations should be performed by trained service personnel.

When working on the equipment, observe precautions in the literature and on tags, stickers, and labels attached to the equipment.

Follow all safety codes. Wear safety glasses and work gloves. Keep a quenching cloth and fire extinguisher nearby when brazing. Use care in handling, rigging, and setting bulky equipment.

Read these instructions thoroughly and follow all warnings or cautions included in literature and attached to the unit. Consult local building codes and National Electrical Code (NEC) for special requirements. Recognize safety information.

This is the safety-alert symbol ⚠.

When you see this symbol on the unit and in instructions or manuals, be alert to the potential for personal injury. Understand these signal words: **DANGER**, **WARNING**, and **CAUTION**. These words are used with the safety-alert symbol.

DANGER identifies the most serious hazards which will result in severe personal injury or death.

WARNING signifies hazards which could result in personal injury or death.

CAUTION is used to identify unsafe practices which may result in minor personal injury or product and property damage.

NOTE is used to highlight suggestions which will result in enhanced installation, reliability, or operation.

⚠ WARNING

ELECTRICAL SHOCK HAZARD

Failure to follow this warning could result in personal injury or death.

Before installing, modifying, or servicing system, the main electrical disconnect switch must be in the OFF position. There may be more than 1 disconnect switch. Lock out and tag switch with a suitable warning label.

WARNING

EXPLOSION HAZARD
Failure to follow this warning could result in personal injury or death. Before installing, modifying, or servicing system, the main electrical disconnect switch must be in the OFF position. There may be more than 1 disconnect switch. Lock out and tag switch with a suitable warning label.

CAUTION

EQUIPMENT DAMAGE HAZARD

Failure to follow this caution may result in equipment damage or improper operation.

Do not bury more than 36 in. (914 mm) of refrigerant pipe in the ground. If any section of pipe is buried, there must be a 6 in. (152 mm) vertical rise to the valve connections on the outdoor units. If more than the recommended length is buried, refrigerant may migrate to the cooler buried section during extended periods of system shutdown. This causes refrigerant slugging and could possibly damage the compressor at start-up.

WARNING

This appliance is not intended for use by persons (including children) with reduced physical, sensory or mental capabilities, or lack of experience and knowledge, unless they have been given supervision or instruction concerning use of the appliance by a person responsible for their safety. Children should be supervised to ensure that they do not play with the appliance.

WARNING

PERSONAL INJURY AND PROPERTY DAMAGE HAZARD
For continued performance, reliability, and safety, the only approved accessories and replacement parts are those specified by the equipment manufacturer. The use of non-manufacturer approved parts and accessories could invalidate the equipment limited warranty and result in fire risk, equipment malfunction, and failure. Review the manufacturer's instructions and replacement parts catalogs available from your equipment supplier.

WARNING

Only use the specified wire. If the wire is damaged, it must be replaced by the manufacturer, its service agent or similarly qualified persons in order to avoid a hazard. The product must be properly grounded at the time of installation, or electric shock may occur.

For all electrical work, follow all local and national wiring standards, regulations, and the Installation Manual. Connect the cables tightly, and clamp them securely to prevent external forces from damaging the terminal. Improper electrical connections can overheat and cause fire, and may also cause shock. All electrical connections must be made according to the Electrical Connection Diagram located on the panels of the indoor and outdoor units.

All wiring must be properly arranged to ensure that the control board cover can close properly. If the control board cover is not closed properly, it can lead to corrosion and cause the connection points on the terminal to heat up, catch fire, or cause electrical shock.

Disconnection must be incorporated in the fixed wiring in accordance with NEC, CSA, and Local Codes. Do not share the electrical outlet with other appliances. Improper or insufficient power supply can cause fire or electric shock.

Provide a disconnecting means and branch-circuit overcurrent protection in accordance with the unit nameplate, the National Electrical Code, Canadian Electrical Code, and applicable local codes. The disconnecting means shall disconnect all ungrounded supply conductors.

WARNING

FOR FLAMMABLE REFRIGERANTS

Do not use means to accelerate the defrosting process or to clean, other than those recommended by the manufacturer.

The appliance shall be stored in a room without continuously operating ignition sources (for example: open flames, an operating gas appliance or an operating electric heater).

Do not pierce or burn. Be aware that refrigerants may not contain an odor.

WARNING - RISK OF FIRE DUE TO FLAMMABLE REFRIGERANT USED. FOLLOW HANDLING INSTRUCTIONS CAREFULLY IN COMPLIANCE WITH NATIONAL REGULATIONS.

R-454B Refrigerant Safety Group **A2L** R-454B

⚠ WARNING

Turn of the unit and disconnect the power before performing any installation or repairing. Failure to do so can cause electric shock.

Installation must be performed by an authorized dealer or specialist. Defective installation can cause water leakage, electrical shock, or fire.

Installation must be performed according to the installation instructions. Improper installation can cause water leakage, electrical shock, or fire.

Contact an authorized service technician for repair or maintenance of this unit. This appliance shall be installed in accordance with national wiring regulations. Only use the included accessories, parts, and specified parts for installation. Using non-standard parts can cause water leakage, electrical shock, fire, and can cause the unit to fail.

Install the unit in a firm location that can support the unit's weight. If the chosen location cannot support the unit's weight, or the installation is not done properly, the unit may drop and cause serious injury and damage.

Install drainage piping according to the instructions in this manual. Improper drainage may cause water damage to your home and property.

If combustible gas accumulates around the unit, it may cause fire.

Do not turn on the power until all work has been completed.

When moving or relocating the unit, consult experienced service technicians for disconnection and re-installation of the unit.

How to install the appliance to its support, please read the information for details in "indoor unit installation" and "outdoor unit installation" sections.

NOTE: The air conditioner's circuit board (PCB) is designed with a fuse to provide overcurrent protection. The specifications of the fuse are printed on the circuit board, for example: T3.15AL/250VAC, T5AL/250VAC, T3.15A/250VAC, T5A/ 250VAC, T20A/250VAC, T30A/250VAC,etc.

NOTE: Only the blast-proof ceramic fuse can be used.

NOTE: Risk of Fire. Flammable refrigerant used. To be repaired only by trained service personnel. Do not puncture refrigerant tubing.

Table 1 lists the units covered in this document.

Table 1 — Unit Sizes

SYSTEM TONS	BTUH	VOLTAGE-PHASE	OUTDOOR MODEL
1.50	18,000	208/230V-1	37MURAQ18AA3
2.00	24,000		37MURAQ24AA3
2.50	30,000		37MURAQ30AA3
3.00	36,000		37MURAQ36AA3
4.00	48,000		37MURAQ48AA3
5.00	60,000		37MURAQ60AA3

⚠ WARNING

The minimum room area or minimum room area of conditioned space is based on releasable charge or total system refrigerant charge.

For R-454B Refrigerant Charge Amount and Minimum Room Area:

The indoor and outdoor units are designed to be used together. Please check the unit you purchased: The height of the room cannot be less than 7.3 feet / 2.2 meters; and the minimum room area of operating or storage should be specified in Table 1.

⚠ WARNING

PRIOR TO INSTALLATION

Before installing the indoor unit, ensure the compatibility with the outdoor unit using the product data as a reference. It is also necessary to confirm the proper application of the equipment and to perform a heat load calculation for proper sizing.

1. **Installation (where refrigerant pipes are allowed)**

- Any person who is involved with working on or breaking into a refrigerant circuit should hold a current valid certificate from an industry-accredited assessment authority, which authorizes their competence to handle refrigerants safely in accordance with an industry recognized assessment specification.
- Maintenance and repair requiring the assistance of other skilled personnel shall be carried out under the supervision of the person competent in the use of flammable refrigerants.
- That the installation of pipe-work shall be kept to a minimum.
- That pipe-work shall be protected from physical damage.
- Where refrigerant pipes shall be compliance with national gas regulations.
- That mechanical connections shall be accessible for maintenance purposes.
- Be more careful that foreign matter (oil, water, etc) does not enter the piping. Also, when storing the piping, securely seal the opening by pinching, taping, etc.
- All working procedure that effects safety means shall only be carried by competent persons.
- Joints shall be tested with detection equipment with a capability of 1/8 oz (5grams)/year of refrigerant or better, with the equipment in standstill and under operation or under a pressure of at least these standstill or operation conditions after installation.
- In cases that require mechanical ventilation, ventilation openings shall be kept clear of obstruction.
- **LEAK DETECTION SYSTEM** installed. Unit must be powered except for service. For the unit with refrigerant sensor, when the refrigerant sensor detects refrigerant leakage, the indoor unit will display a error code and emit a buzzing sound, the compressor of outdoor unit will immediately stop, and the indoor fan will start running. The service life of the refrigerant sensor is 15 years. When the refrigerant sensor malfunctions, the indoor unit will display the error code FHCC. The refrigerant sensor can not be repaired. It shall only be replaced with the sensor specified by the manufacture.

2. **When a FLAMMABLE REFRIGERANT is used**

The requirements for installation space of appliance and/or ventilation requirements are determined according to:

- the mass charge amount (M) used in the appliance,
- the installation location,
- the type of ventilation of the location or of the appliance.
- piping material, pipe routing, and installation shall include protection from physical damage in operation and service, and be in compliance with national and local codes and standards, such as ASHRAE 15 or CSA B52. All field joints shall be accessible for inspection prior to being covered or enclosed.
- that protection devices, piping, and fittings shall be protected as far as possible against adverse environmental effects, for example, the danger of water collecting and freezing in relief pipes or the accumulation of dirt and debris;
- that piping in refrigeration systems shall be so designed and installed to minimize the likelihood of hydraulic shock damaging the system;
- that steel pipes and components shall be protected against corrosion with a rustproof coating before applying any insulation;
- that precautions shall be taken to avoid excessive vibration or pulsation;
- after completion of field piping for split systems, the field pipework shall be pressure tested with an inert gas and then vacuum tested prior to refrigerant charging, according to the following requirements:
  a. The minimum test pressure for the low side of the system shall be the low side design pressure and the minimum test pressure for the high side of the system shall be the high side design pressure, unless the high side of the system cannot be isolated from the low side of the system in which case the entire system shall be pressure tested to the low side design pressure.
  b. The test pressure after removal of pressure source shall be maintained for at least 1 hour with no decrease of pressure indicated by the test gauge with test gauge resolution not exceeding 5% of the test pressure.
  c. During the evacuation test, after achieving a vacuum level specified in the manual or less, the refrigeration system shall be isolated from the vacuum pump and the pressure shall not rise above 1/2 inch within 10 min. The vacuum pressure level shall be specified in the manual, and shall be the lessor of 1/4 inch or the value required for compliance with national and local codes and standards, which may vary between residential, commercial, and industrial buildings.

– Field-made refrigerant joints indoors shall be tightness tested according to the following requirements: The test method shall have a sensitivity of 1/8 oz (5grams) per year of refrigerant or better under a pressure of at least 125% of the maximum allowable pressure. No leak shall be detected.

3. **Qualification of Workers**

Any maintenance, service and repair operations must be performed by skilled and authorized personnel. Every working procedure that effects safety means shall only be carried out by competent persons that joined the training and achieved competence should be documented by a certificate. The training of these procedures is carried out by national training organizations or manufacturers that are accredited to teach the relevant national competency standards that may be set in legislation. Examples for such working procedures are:

- breaking into the refrigerating circuit;
- opening of sealed components;
- opening of ventilated enclosures.

4. **Checks to the area**

Prior to beginning work on systems containing flammable refrigerants, safety checks are necessary to ensure that the risk of ignition is minimized. For repair to the refrigerating system, the following precautions shall be complied with prior to conducting work on the system.

5. **Work procedure**

Work shall be undertaken under a controlled procedure so as to minimize the risk of a flammable gas or vapor being present while the work is being performed.

6. **General work area**

All maintenance staff and others working in the local area shall be instructed on the nature of work being carried out. work in confined spaces shall be avoided.

7. **Checking for presence of refrigerant**

The area shall be checked with an appropriate refrigerant detector prior to and during work, to ensure the technician is aware of potentially flammable atmospheres. Ensure that the leak detection equipment being used is suitable for use with flammable refrigerants, i.e. no sparking, adequately sealed or intrinsically safe.

8. Presence of fire extinguisher

If any hot work is to be conducted on the refrigeration equipment or any associated parts, appropriate fire extinguishing equipment shall be available to hand. Have a dry power or CO2 fire extinguisher adjacent to the charging area.

9. No ignition sources

No person carrying out work in relation to a REFRIGERATING SYSTEM which involves exposing any pipe work shall use any sources of ignition in such a manner that it may lead to the risk of fire or explosion. All possible ignition sources, including cigarette smoking, should be kept sufficiently far away from the site of installation, repairing, removing and disposal, during which refrigerant can possibly be released to the surrounding space. Prior to work taking place, the area around the equipment is to be surveyed to make sure that there are no flammable hazards or ignition risks. “No Smoking” signs shall be displayed.

10. Ventilated area

Ensure that the area is in the open or that it it adequately ventilated before breaking into the system or conducting any hot work. A degree of ventilation shall continue during the period that the work is carried out. The ventilation should safely disperse any released refrigerant and preferably expel it externally into the atmosphere.

11. Checks to the refrigeration equipment

Where electrical components are being changed, they shall be fit for the purpose and to the correct specification. At all times the manufacturer’s maintenance and service guidelines shall be followed. If in doubt consult the manufacturer’s technical department for assistance. The following checks shall be applied to installations using FLAMMABLE REFRIGERANTS:

- the actual refrigerant charge is in accordance with the room size within which the refrigerant containing parts are installed;
- the ventilation machinery and outlets are operating adequately and are not obstructed;
- if an indirect refrigerating circuit is being used, the secondary circuits shall be checked for the presence of refrigerant;
- marking to the equipment continues to be visible and legible, marking and signs that are illegible shall be corrected;
- refrigeration pipe or components are installed in a position where they are unlikely to be exposed to any substance which may corrode refrigerant containing components, unless the components are constructed of materials which are inherently resistant to being corroded or are suitably protected against being so corroded.

12. Checks to electrical devices

Repair and maintenance to electrical components shall include initial safety checks and component inspection procedures. If a fault exists that could compromise safety, then no electrical supply shall be connected to the circuit until it is satisfactorily dealt with. If the fault cannot be corrected immediately but it is necessary to continue operation, and adequate temporary solution shall be used. This shall be reported to the owner of the equipment so all parties are advised. **Initial safety checks shall include**:

- that capacitors are discharged: this shall be done in a safe manner to avoid the possibility of sparking
- that there are no live electrical components and exposed wiring while charging, recovering, or purging the system;
- that there is continuity of earth bonding.

13. Cabling

Check that cabling will not be subject to wear, corrosion, excessive pressure, vibration, sharp edges or any other adverse environmental effects. The check shall also take into account the effects of aging or continual vibration from sources such as compressors or fans.

14. Detection of flammable refrigerants

Under no circumstances shall potential sources of ignition be used in the searching for or detection of refrigerant leaks. A halide torch (or any other detector using a naked flame) shall not be used.

The following leak detection methods are deemed acceptable for refrigerant systems. Electronic leak detectors may be used to detect refrigerant leaks but, in the case of FLAMMABLE REFRIGERANTS, the sensitivity may not be adequate, or may need re-calibration. (Detection equipment shall be calibrated in a refrigerant-free area.) Ensure that the detector is not a potential source of ignition and is suitable for the refrigerant used. Leak detection equipment shall be set at a percentage of the LFL of the refrigerant and shall be calibrated to the refrigerant employed, and the appropriate percentage of gas (25 % maximum) is confirmed. Leak detection fluids are also suitable for use with most refrigerants but the use of detergents containing chlorine shall be avoided as the chlorine may react with the refrigerant and corrode the copper pipe-work.

NOTE: Examples of leak detection fluids are:

- bubble method,
- fluorescent method agents.

If a leak is suspected, all naked flames shall be removed/extinguished.

If a leakage of refrigerant is found which requires brazing, all of the refrigerant shall be recovered from the system, or isolated (by means of shut off valves) in a part of the system remote from the leak. See the following instructions of removal of refrigerant.

15. Removal and evacuation

When breaking into the refrigerant circuit to make repairs - or for any other purpose conventional procedures shall be used. However, for flammable refrigerants it is important that best practice be followed, since flammability is a consideration.

The following procedure shall be adhered to:

- safely remove refrigerant following local and national regulations
- evacuate
- purge the circuit with inert gas (optional for A2L)
- evacuate (optional for A2L)
- continuously flush or purge with inert gas when using flame to open circuit
- open the circuit

The refrigerant charge shall be recovered into the correct recovery cylinders if venting is not allowed by local and national codes. For appliances containing flammable refrigerants, the system shall be purged with oxygen-free nitrogen to render the appliance safe for flammable refrigerants. This process might need to be repeated several times. Compressed air or oxygen shall not be used for purging refrigerant systems.

For appliances containing flammable refrigerants, refrigerants purging shall be achieved by breaking the vacuum in the system with oxygen-free nitrogen and continuing to fill until the working pressure is achieved, then venting to atmosphere, and finally pulling down to a vacuum (optional for A2L). This process shall be repeated until no refrigerant is within the system (optional for A2L). When the final oxygen-free nitrogen charge is used, the system shall be vented down to atmospheric pressure to enable work to take place.

The outlet for the vacuum pump shall not be close to any potential ignition sources, and ventilation shall be available.

16. Charging procedures

In addition to conventional charging procedures, the following requirements shall be followed:

Work shall be undertaken with appropriate tools only (In case of uncertainty, consult the manufacturer of the tools for use with flammable refrigerants).

Ensure that contamination of different refrigerants does not occur when using charging equipment. Hoses or lines shall be as short as possible to minimize the amount of refrigerant contained in them.

Cylinders shall be kept in an appropriate position.

Ensure that the refrigeration system is earthed prior to charging the system with refrigerant.

Label the system when charging is complete (if not already).

Extreme care shall be taken not to overfill the refrigeration system.

Prior to recharging the system it shall be pressure tested with oxygen free nitrogen (OFN). The system shall be leak tested on completion of charging but prior to commissioning. A follow up leak test shall be carried out prior to leaving the site.

17. Decommissioning

Before carrying out this procedure, it is essential that the technician is completely familiar with the equipment and all its detail. It is recommended good practice that all refrigerants are recovered safely. Prior to the task being carried out, an oil and refrigerant sample shall be taken in case analysis is required prior to re-use of recovered refrigerant. It is essential that electrical power is available before the task is commenced.

a. Become familiar with the equipment and its operation.
b. Isolate system electrically
c. Before attempting the procedure ensure that:
   - mechanical handling equipment is available, if required, for handling refrigerant cylinders;
   - all personal protective equipment is available and being used correctly;
   - the recovery process is supervised at all times by a competent person; recovery equipment and cylinders conform to the appropriate standards.
d. Pump down refrigerant system, if possible.
e. If a vacuum is not possible, make a manifold so that refrigerant can be removed from various parts of the system.
f. Make sure that cylinder is situated on the scales before recovery takes place.
g. Start the recovery machine and operate in accordance with instructions.
h. Do not overfill cylinders (no more than 80 % volume liquid charge)
i. Do not exceed the maximum working pressure of the cylinder, even temporarily.
j. When the cylinders have been filled correctly and the process completed, make sure that the cylinders and the equipment are removed from site promptly and all isolation valves on the equipment are closed off.
k. Recovered refrigerant shall not be charged into another refrigeration system unless it has been cleaned and checked.

18. Labeling

Equipment shall be labeled stating that it has been de-commissioned and emptied of refrigerant. The label shall be dated and signed. For appliances containing FLAMMABLE REFRIGERANTS, ensure that there are labels on the equipment stating the equipment contains FLAMMABLE REFRIGERANT.

19. Recovery

When removing refrigerant from a system, either for servicing or decommissioning, it is recommended good practice that all refrigerants are removed safely.

When transferring refrigerant into cylinders, ensure that only appropriate refrigerant recovery cylinders are employed. Ensure that the correct number of cylinders for holding the total system charge is available. All cylinders to be used are designated for the recovered refrigerant and labeled for that refrigerant (i. e. special cylinders for the recovery of refrigerant). Cylinders shall be complete with pressure-relief valve and associated shut-off valves in good working order. Empty recovery cylinders are evacuated and, if possible, cooled before recovery occurs.

The recovery equipment shall be in good working order with a set of instructions concerning the equipment that is at hand and shall be suitable for the recovery of the flammable refrigerant. If in doubt? the manufacturer should be consulted. In addition, a set of calibrated weighing scales shall be available and in good working order. Hoses shall be complete with leak-free disconnect couplings and in good condition.

The recovered refrigerant shall be processed according to local legislation in the correct recovery cylinder, and the relevant waste transfer note arranged. Do not mix refrigerants in recovery units and especially not in cylinders.

If compressors or compressor oils are to be removed, ensure that they have been evacuated to an acceptable level to make certain that flammable refrigerant does not remain within the lubricant. The compressor body shall not be heated by an open flame or other ignition sources to accelerate this process. When oil is drained from a system, it shall be carried out safely.

20. Transportation, marking and storage for units that employ flammable refrigerants

a. General

The following information is provided for units that employ FLAMMABLE REFRIGERANTS.

b. Transport of equipment containing flammable refrigerants

Attention is drawn to the fact that additional transportation regulations may exist with respect to equipment containing flammable gas. The maximum number of pieces of equipment or the configuration of the equipment permitted to be transported together will be determined by the applicable transport regulations.

c. Marking of equipment using signs

Signs for similar appliances used in a work area are generally addressed by local regulations and give the minimum requirements for the provision of safety and/or health signs for a work location.

All required signs are to be maintained and employers should ensure that employees receive suitable and sufficient instruction and training on the meaning of appropriate safety signs and the actions that need to be taken in connection with these signs.

The effectiveness of signs should not be diminished by too many signs being placed together.

Any pictograms used should be as simple as possible and contain only essential details.

d. Disposal of equipment using flammable refrigerants

See national regulations.

e. Storage of equipment/appliances

The storage of the appliance should be in accordance with the applicable regulations or instructions, whichever is more stringent.

f. Storage of packed (unsold) equipment

Storage package protection should be constructed in such a way that mechanical damage to the equipment inside the package will not cause a leak of the REFRIGERANT CHARGE.

The maximum number of pieces of equipment permitted to be stored together will be determined by local regulations.

Table 2 — Symbols displayed on the indoor unit or outdoor unit

A2L	WARNING	This symbol shows that this appliance used a flammable refrigerant. If the refrigerant is leaked and exposed to an external ignition source, there is a risk of fire.
	CAUTION	This symbol shows that the operation manual should be read carefully.
	CAUTION	This symbol shows that a service personnel should be handling this equipment with reference to the installation manual.
	CAUTION	
	CAUTION	This symbol shows that information is available such as the operating manual or installation manual.

ACCESSORIES

The system is shipped with the following accessories. Use all of the installation parts and accessories to install the system. Improper installation may result in water leakage, electrical shock and fire, or cause the equipment to fail. Keep the installation manual in a safe place and do not discard any other accessories until the installation work has been completed.

Table 3 — Accessories

NAME	IMAGE	QUANTITY
Drain Fitting		1
Gasket **NOTE: Sizes 48K and 60K will not require the gasket.**		1
Flare-to braze adapter		2
5/8 flare→3/4 flare adapter (For 18K Regular Heat Series)		1
6 Foot Drain Tubing		1

NOTE: For Crossover Applications with approved Residential furnaces and fan coils, the KSAIC0701230 Crossover Interface must be provided and purchased separately. Please refer to pages 23 and 24 for Crossover wiring instructions

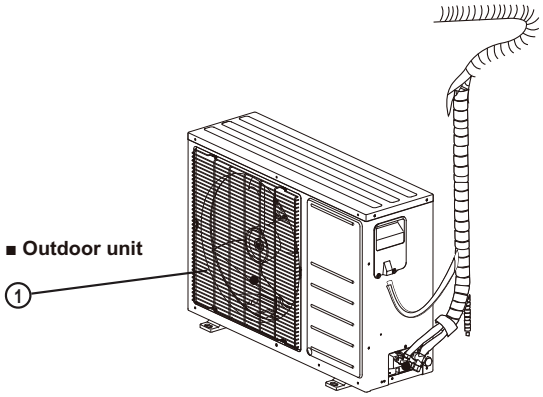

Fig. 2 — Outdoor Unit

NOTE:

- **If the outdoor unit is higher than the indoor unit, prevent rain from flowing into the indoor unit along the connection pipe by making a downward arc in the connection pipe before it enters the wall to the indoor unit. This ensures that rain drips from the connection pipe before it enters the wall.**
- **Piping and the interconnecting wiring are field supplied.**
- **Figure 2 is only a sketch. The actual model may differ slightly.**

DIMENSIONS

Table 4 — Dimensions and Weights

System Size		18K	24K	30K	36K	48K	60K
		(208/230 V)	(208/230 V)	(208/230 V)	(208/230 V)	(208/230 V)	(208/230 V)
Height (H)	in (mm)	21.81 (554)	26.50 (673)	31.89 (810)	31.89 (810)	38.39 (975)	38.39 (975)
Width (W)	in (mm)	31.69 (805)	35.04 (890)	37.24 (946)	37.24 (946)	38.58 (980)	38.58 (980)
Depth (D)	in (mm)	12.99 (330)	13.46 (342)	16.14 (410)	16.14 (410)	16.34 (415)	16.34 (415)
Weight -Net	lbs. (kg)	77.16 (35)	102.29 (46.4)	141.76 (64.3)	153.22 (69.5)	192.9 (87.5)	192.9 (87.5)

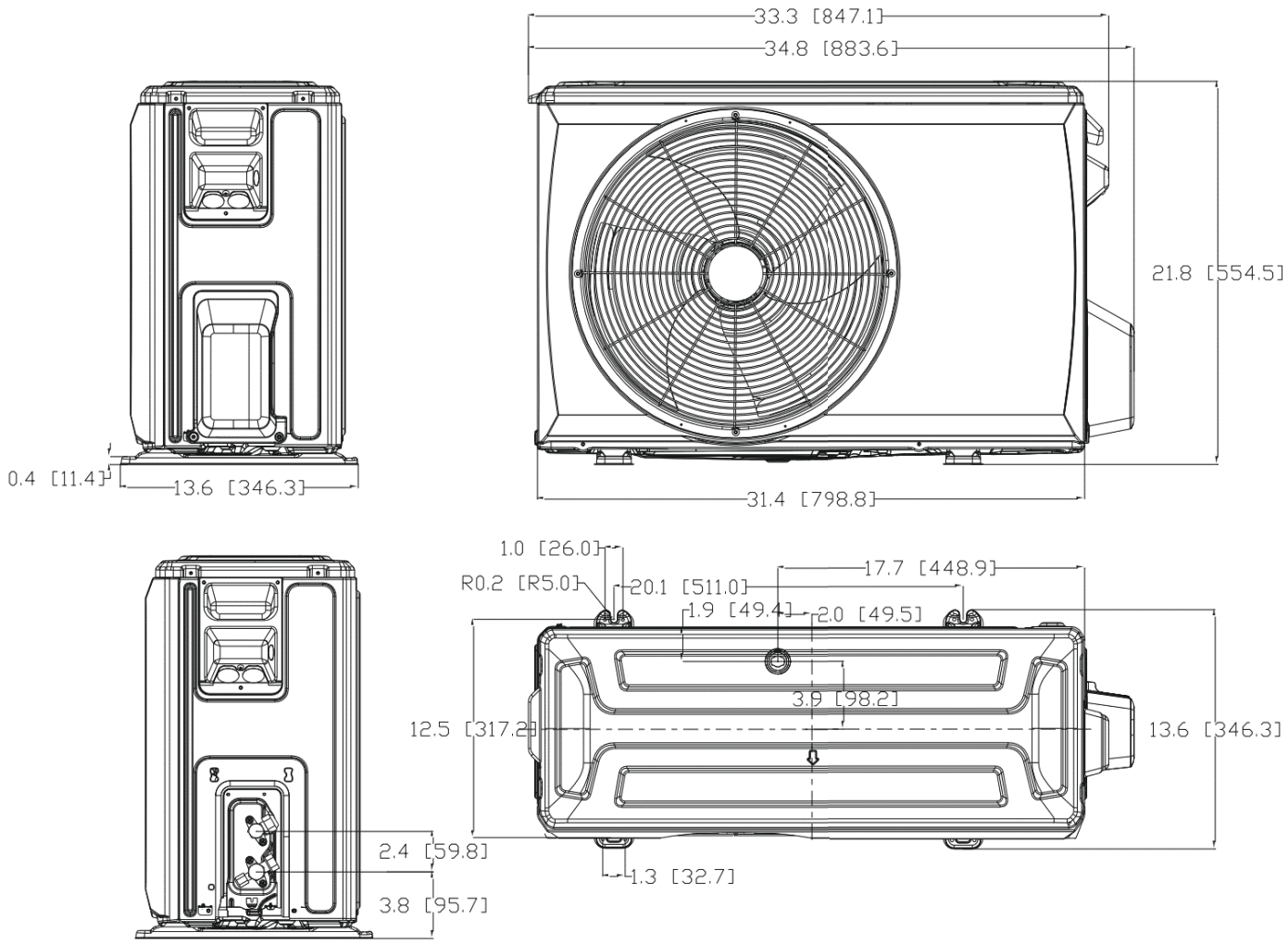

Fig. 3 —Size 18K

DIMENSIONS (CONT.)

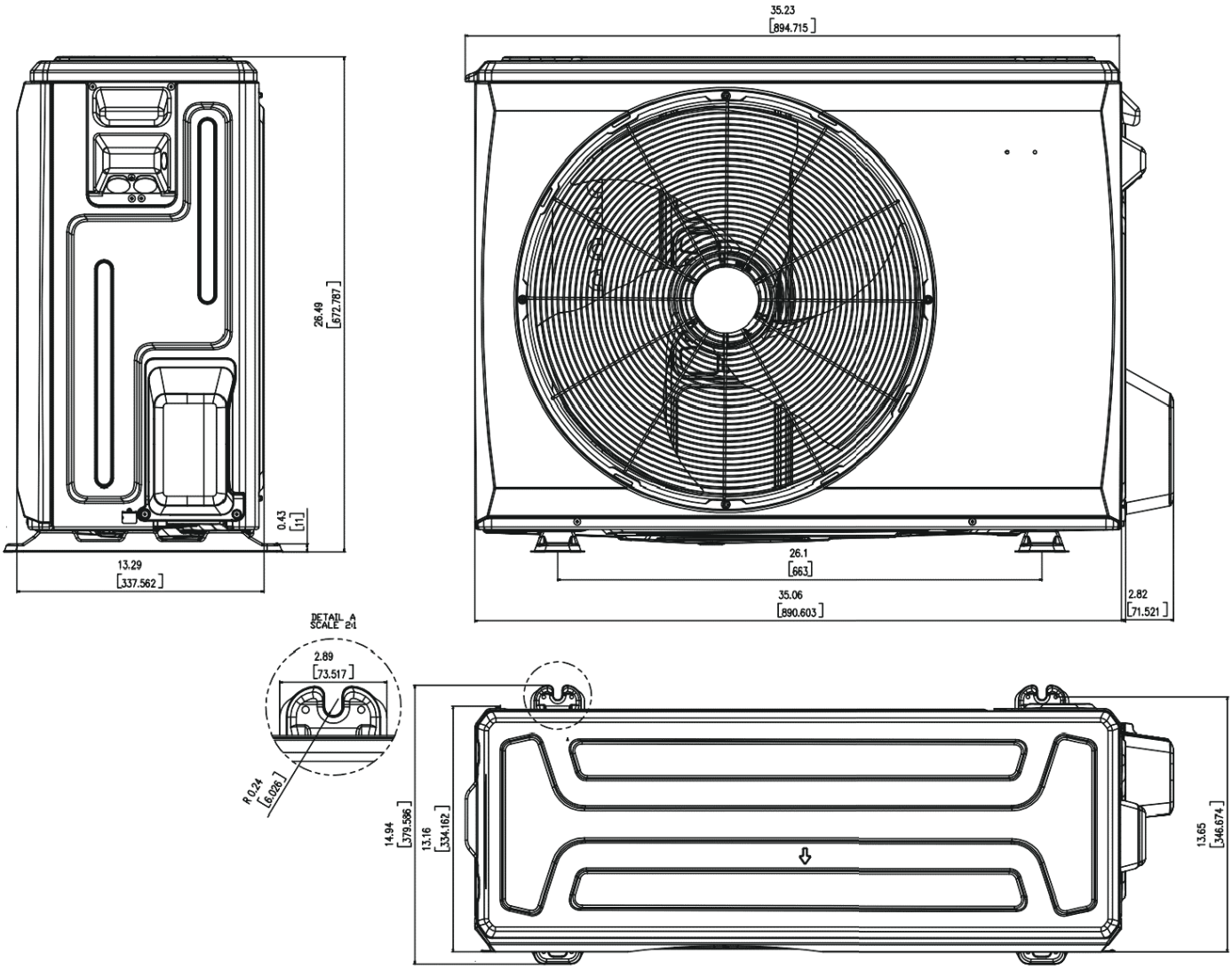

Fig. 4 —Sizes 24K

DIMENSIONS (CONT.)

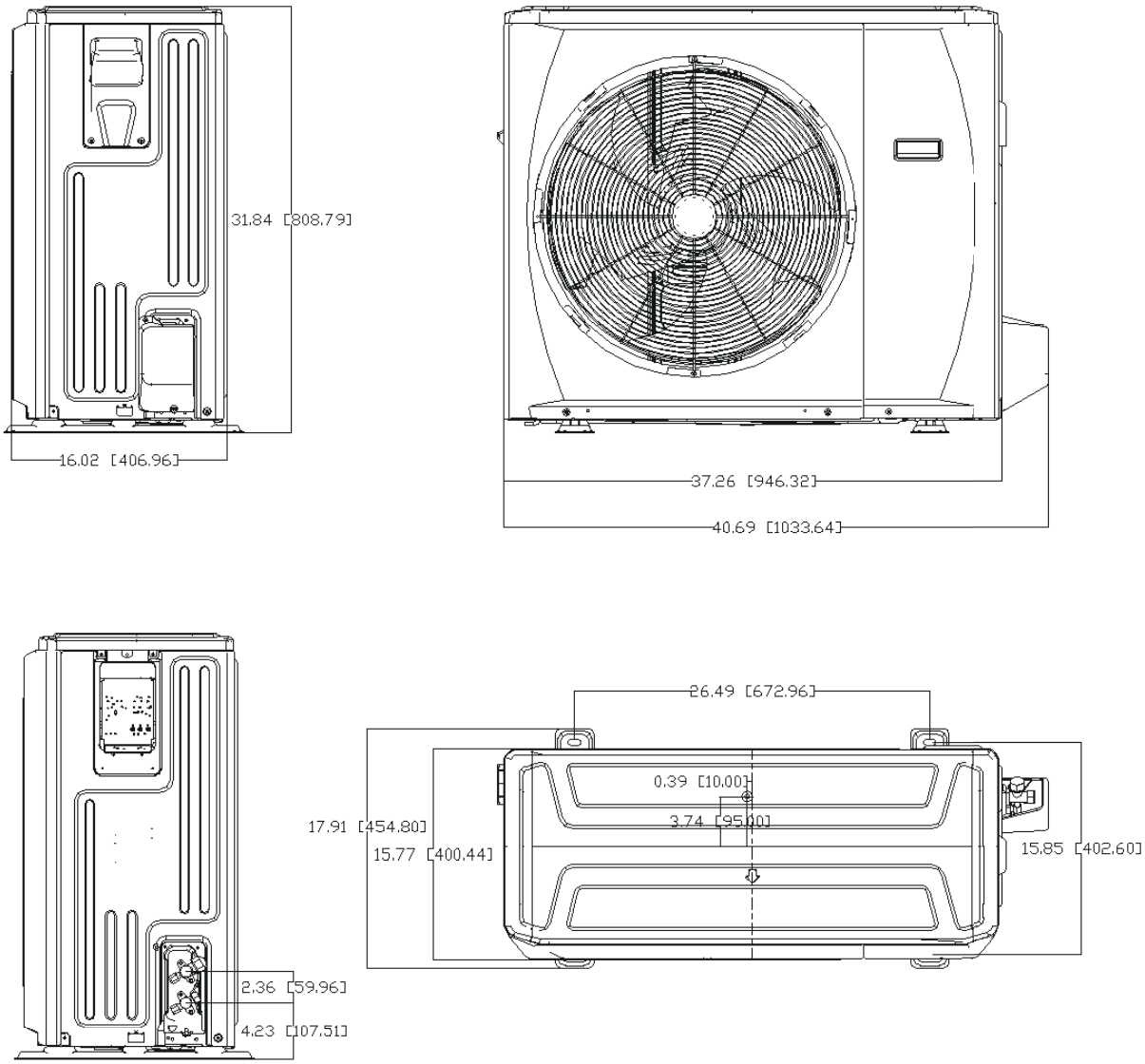

Fig. 5 —30K/36K

DIMENSIONS (CONT.)

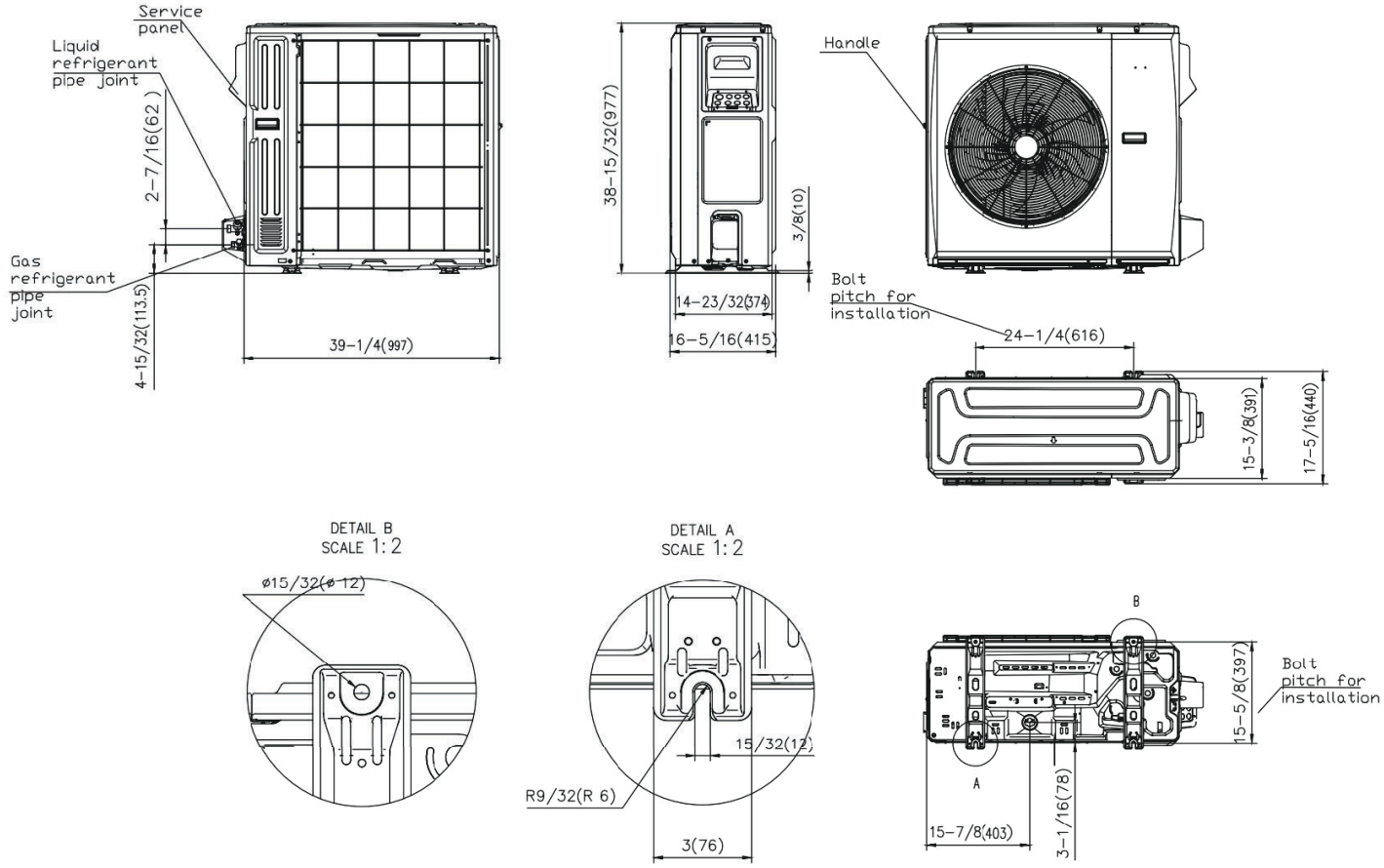

Fig. 6 —Sizes 48K/60K

The outdoor unit can be anchored to the ground or to a wall-mounted bracket with bolt (M10). Prepare the installation base of the unit according to the dimensions below. .

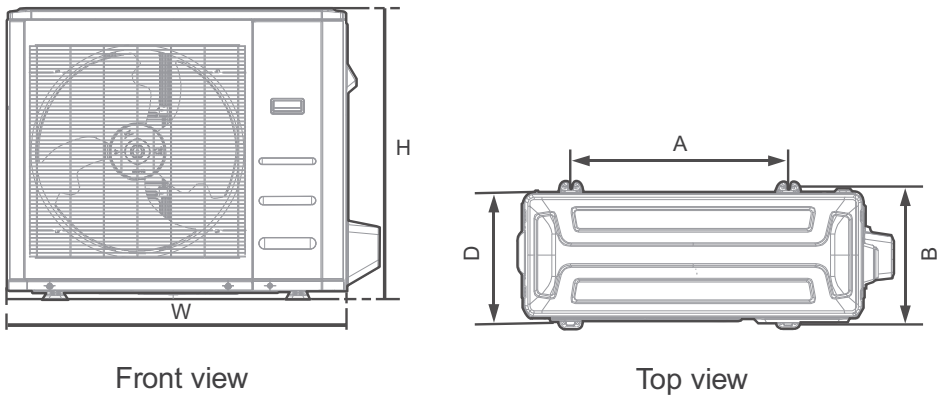

Fig. 7 —Outdoor Unit Types and Specifications

Table 5 — Dimensions

Capacity Sizes	Outdoor Unit Dimensions						Mounting Dimensions			
	W		H		D		A		B	
	Inch	mm	Inch	mm	Inch	mm	Inch	mm	Inch	mm
18K	31-11/16	805	21-13/16	554	13	330	20-1/8	511	12-1/2	317
24K	35	890	26-1/2	673	13-15/32	342	26-1/8	663	13-15/16	354
30/36K	37-1/4	946	31-29/32	810	16-5/32	410	26-1/2	673	15-7/8	403
48/60K	38-19/32	980	38-3/8	975	16-11/32	415	24-1/4	616	15-5/8	397

Manufacturer reserves the right to change, at any time, specifications and designs without notice and without obligations.

REFRIGERANT PIPING CONNECTION

SAFETY PRECAUTIONS

⚠ WARNING

All field piping must be completed by a licensed technician and must comply with the local and national regulations.

When the air conditioner is installed in a small room, measures must be taken to prevent the refrigerant concentration in the room from exceeding the safety limit in the event of refrigerant leakage. If the refrigerant leaks and its concentration exceeds its proper limit, hazards due to lack of oxygen may result.

When installing the refrigeration system, ensure that air, dust, moisture or foreign substances do not enter the refrigerant circuit. Contamination in the system may cause poor operating capacity, high pressure in the refrigeration cycle, explosion or injury.

Ventilate the area immediately if there is refrigerant leakage during the installation. Leaked refrigerant gas is both toxic and flammable. Ensure there is no refrigerant leakage after completing the installation work.

NOTES ON PIPE LENGTH AND ELEVATION: Ensure that the length of the refrigerant pipe, the number of bends, and the drop height between the indoor and outdoor units meets the requirements shown in the following table:

Table 6 — Max Length and Drop Height Based on Model

System Size		18K	24K	30K	36K	48K	60K
Input Power	VAC	208/230V					
Min. Piping Length	ft. (m)	10 (3)					
Standard Piping Length	ft. (m)	24.6 (7.5)					
Max. outdoor-indoor height difference (OU higher than IU)	ft. (m)	65.6 (20)	82 (25)	82 (25)	98.4 (30)	98.4 (30)	98.4 (30)
Max. outdoor-indoor height difference (IU higher than OU)	ft. (m)	65.6 (20)	82 (25)	82 (25)	98.4 (30)	98.4 (30)	98.4 (30)
Suction Pipe (size - connection type)	in (mm)	ø3/4” (19)	ø3/4” (19)	ø3/4” (19)	ø3/4” (19)	ø3/4” (19)	ø3/4” (19)
Liquid Pipe (size-connection)	in (mm)	ø3/8” (9.52)					
Refrigerant Type	Type	R454B					
Charge Amount	lb. (kg)	3.2(1.45)	5.73(2.6)	6.61 (3.0)	7.28(3.3)	8.38(3.8)	8.38(3.8)
Additional Refrigerant Charge (when Pipe length > 24.6 ft)	Oz/ft (g/m)	0.7(65)	0.7(65)	0.7(65)	0.7(65)	0.7(65)	0.7(65)
Total Maximum Piping Length per system	ft. (m)	98.42 (30)	164.04 (50)	164.04 (50)	246 (75)	246 (75)	246 (75)

Table 7 — Pipe Specifications

Name	Model	Liquid Side	Gas Side	Remarks
Connecting Pipe Assembly	18K	Ø3/8in(Ø9.52mm)	Ø3/4in(Ø19mm)	Pipes are not included in the accessories and will need to be purchased separately from the local supplier.
	24K	Ø3/8in(Ø9.52mm)	Ø3/4in(Ø19mm)	
	30K	Ø3/8in(Ø9.52mm)	Ø3/4in(Ø19mm)	
	36K	Ø3/8in(Ø9.52mm)	Ø3/4in(Ø19mm)	
	48K	Ø3/8in(Ø9.52mm)	Ø3/4in(Ø19mm)	
	60K	Ø3/8in(Ø9.52mm)	Ø3/4in(Ø19mm)	

Table 8 — Air Handler Braze Adapter Connections

Air Handler Unit Model	Air Handler Unit Connection (in.flare)		Adapter Required at Air Handler Unit (in.flare to braze)	Outdoor Model	Outdoor Unit Connection (in.flare)		Adapter Required at Outdoor Unit (in.flare to flare or braze)
18K-60K	Liquid	3/8	3/8flare→3/8braze	18K	Liquid	3/8	3/8flare→3/8braze
	Gas	3/4	3/4flare→3/4braze		Gas	5/8	5/8flare→3/4flare
	Liquid	3/8	3/8flare→3/8braze	24K/30K/36K/48K/60K	Liquid	3/8	3/8flare→3/8braze
	Gas	3/4	3/4flare→3/4braze		Gas	3/4	3/8flare→3/8braze

REFRIGERANT PIPING CONNECTION INSTRUCTIONS

CAUTION

The branching pipe must be installed horizontally. An angle of more than 10° may cause malfunction.

DO NOT install the connecting pipe until both indoor and outdoor units have been installed.

Insulate the gas piping to prevent condensation.

Step 1: Cut Pipes

When preparing refrigerant pipes, take extra care to cut and flare them properly. This ensures efficient operation and minimizes the need for future maintenance.

a. Measure the distance between the indoor and outdoor units.
b. Using a pipe cutter, cut the pipe a little longer than the measured distance.
c. Make sure the pipe is cut at a perfect 90° angle.

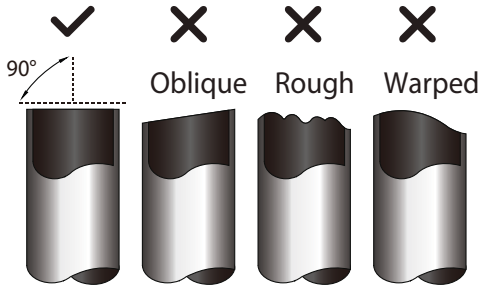

Fig. 8 —Pipe Cutting

CAUTION

DO NOT DEFORM PIPE WHILE CUTTING
Be extra careful not to damage, dent, or deform the pipe while cutting. This will drastically reduce the heating efficiency of the unit.

Step 2: Remove Burrs

Burrs can affect the air-tight seal of the refrigerant piping connection. Therefore, they must be completely removed.

a. Hold the pipe at a downward angle to prevent burrs from falling into the pipe.
b. Using a reamer or deburring tool, remove all burrs from the cut section of the pipe.

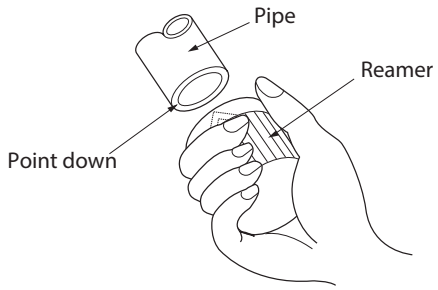

Fig. 9 — Deburring Tool

Step 3: Flare Pipe Ends

Proper flaring is essential to achieving an airtight seal.

a. After removing the burrs from the cut pipe, seal the ends with PVC tape to prevent foreign materials from entering the pipe.
b. Sheath the pipe with insulating material.
c. Place factory flare nut on pipe. Make sure they are facing the right direction. Once the ends are flared, it is impossible to put them on or change their direction.

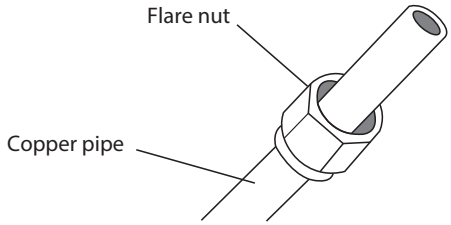

Fig. 10 — Copper pipe and flare nut

d. Remove the PVC tape from ends of pipe when ready to perform the flaring work.
e. Clamp the flare block on the end of the pipe. The end of the pipe must extend beyond the flare form.

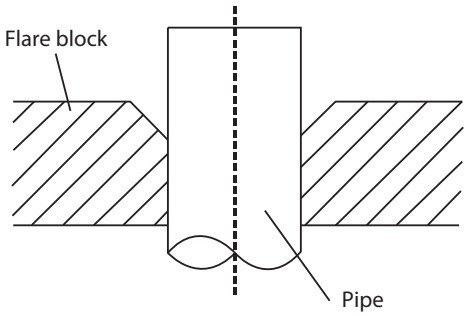

Fig. 11 — Flare Block

f. Place the flaring tool onto the form.
g. Turn the handle of the flaring tool clockwise until the pipe is fully flared. Flare the pipe in accordance with the dimensions in Table 9.

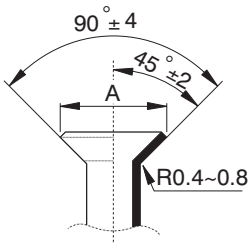

Fig. 12 — Flare Shape

Table 9 — Piping Extension Beyond Flare Form

PIPE GAUGE IN (MM)	TIGHTENING TORQUE Ft-lbs (N.m)		FLARE DIMENSIONS (A) in (mm)	
	Ft-lbs	N.m	Min.	Max.
Ø3/8 (9.52)	23.6-27.75	(32-39)	0.52 (13.2)	0.53 (13.5)
Ø5/8 (16)	42-52.37	(57-71)	0.76 (19.2)	0.78 (19.7)
Ø3/4 (19)	49.4-74.5	(67-101)	0.91 (23.2)	0.93 (23.7)

h. Remove the flaring tool and flare block, then inspect the end of the pipe for cracks and even flaring.

Step 4: Connect the Pipes

Connect the copper pipes to the indoor unit first, then connect the pipes to the outdoor unit. Connect the low-pressure pipe first, then connect the high pressure pipe.

1. When connecting the flare nuts, apply a thin coat of refrigeration oil to the flared ends of the pipes.
2. Align the center of the two pipes that are being connected.
3. Tighten the flare nut by hand.
4. Using a wrench, grip the nut on the unit tubing.
5. While firmly gripping the nut, use a torque wrench to tighten the flare nut according to the torque specifications in Table 9.
6. **NOTE: Use an adjustable wrench and a torque wrench when connecting or disconnecting pipes to or from the unit.**

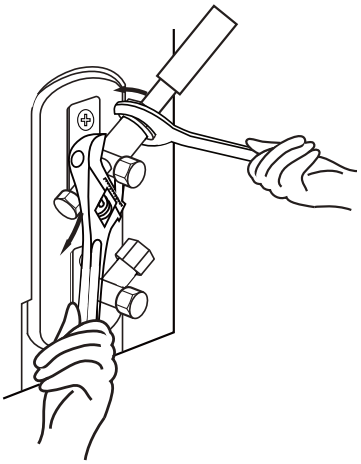

Fig. 13 — Torque Wrench and Spanner Wrench

CAUTION

Wrap insulation around the piping. Direct contact with the bare piping may result in burns or frostbite.
Ensure the pipe is properly connected. Over tightening may damage the bell mouth and under tightening may lead to leakage.

MINIMUM BEND RADIUS

1. Carefully bend the tubing in the middle according to Fig. 14.

CAUTION

DO NOT bend the tubing more than 90° or more than three times.
Use care when bending pipe, do not kink pipe.

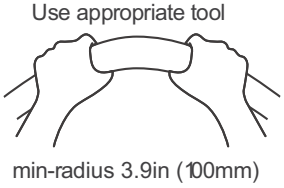

Fig. 14 —Bend Tubing

2. After connecting the copper pipes to the indoor unit, wrap the power cable, signal cable and the piping together with binding tape.

CAUTION

DO NOT intertwine signal cable with other wires.
While bundling these items together, DO NOT intertwine or cross the signal cable with any other wiring.

OUTDOOR UNIT INSTALLATION

CAUTION

Prior to Installation
Before installing the indoor unit, ensure the compatibility with the outdoor unit using the product data as a reference. It is also necessary to confirm the proper application of the equipment and to perform a heat load calculation for proper sizing.

Before installing the unit, ensure the compatibility with the outdoor unit using the product data as a reference.

NOTE: Install the unit by following local codes and regulations. They may differ between different regions.

SELECT THE INSTALLATION LOCATION OF OUTDOOR UNITS

Choose an appropriate location before installing the outdoor unit. Use the following are standards to help choose an appropriate location for the unit.

☑ Firm and solid—the location can support the unit and will not vibrate.

☑ Noise from the unit will not disturb other people.

☑ Good air circulation and ventilation.

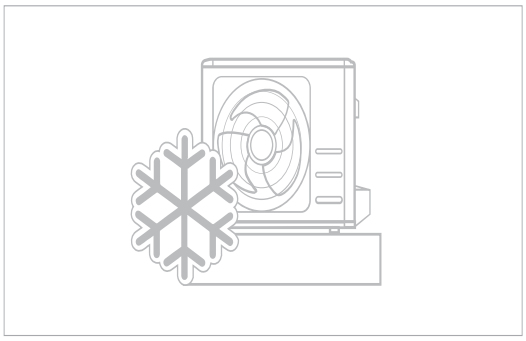

☑ Where snowfall is anticipated, take appropriate measures to prevent ice buildup and coil damage.

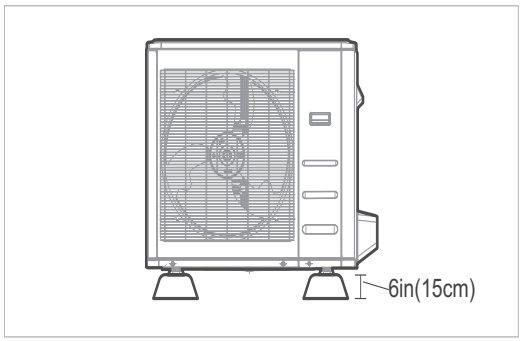

☑ The outdoor unit must be installed on risers of at least 6in(15cm) in height or per local code to get unit above local mean snow fall.

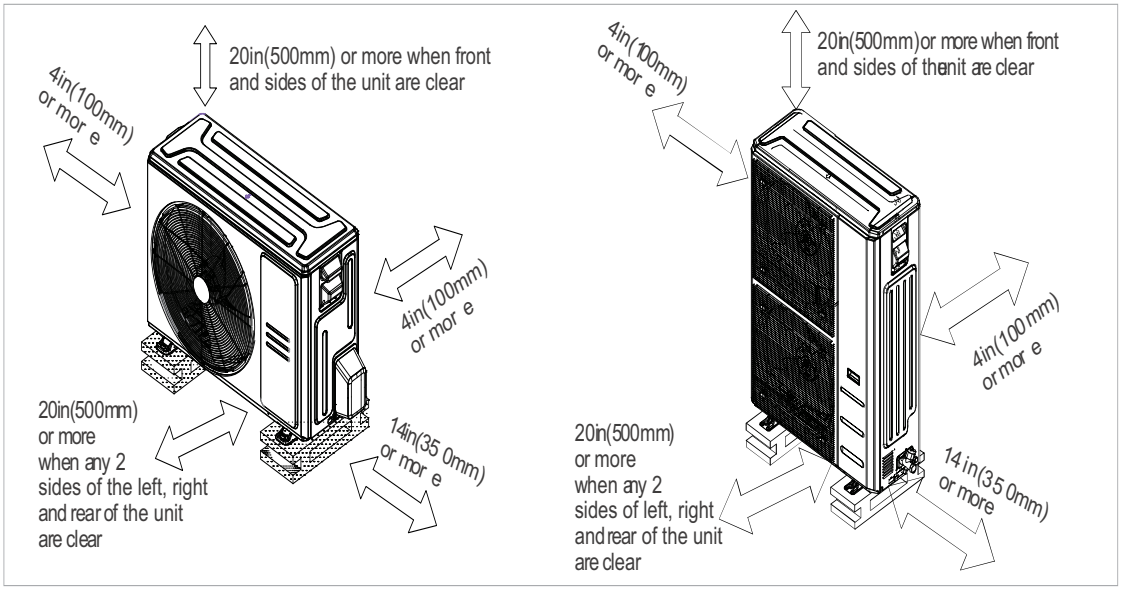

☑ Meets all spatial requirements shown in Installation Space Requirements above.

Fig. 15 —Standards for Proper Installation

CLEARANCES

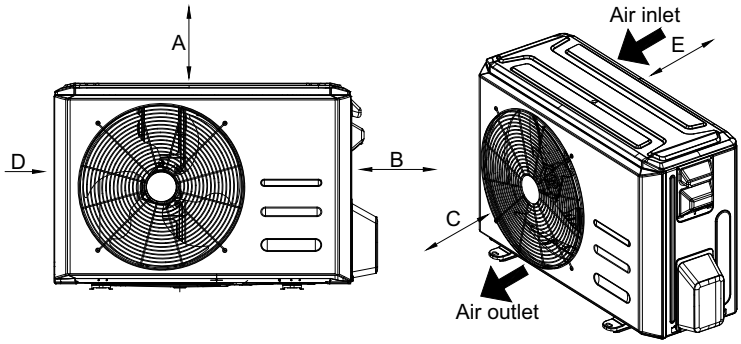

Fig. 16 — Clearances

Table 10 — Clearances

UNIT	MINIMUM VALUE in. (mm)
A	20 (500)
B	14 (350)
C	20 (500)
D	4 (101)
E	4 (101)

NOTE: The outdoor unit must be mounted at least 2in (50mm) above the maximum anticipated snow depth.

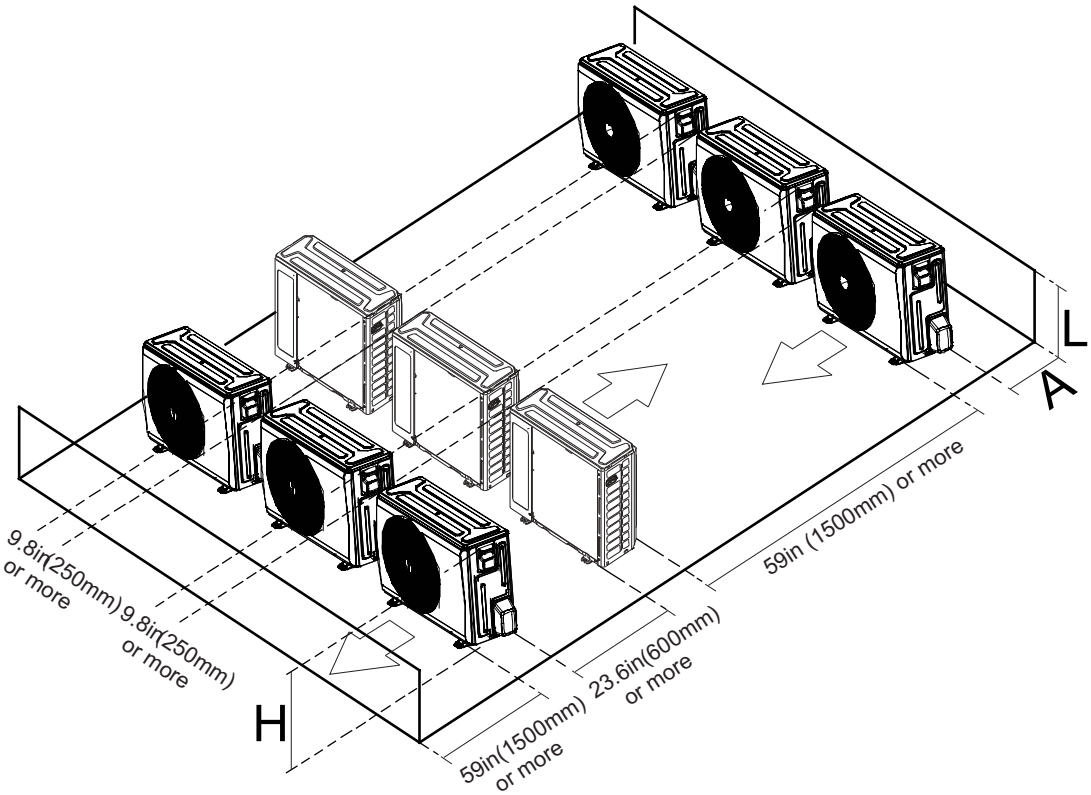

Fig. 17 – Clearance for Multiple Units

DO NOT INSTALL UNIT IN THE FOLLOWING LOCATIONS

- Near an obstacle that will block air inlets and outlets.
- In a location that is exposed to large amounts of dust.
- Near animals or plants that will be harmed by hot air discharge.
- Near any source of combustible gas where leaks may be likely.
- Near a public street, crowded areas, or where noise from the unit will disturb others.

⚠ CAUTION

SPECIAL CONSIDERATIONS FOR EXTREME WEATHER
If the unit is exposed to heavy wind:
Install unit so that air outlet fan is at a 90° angle to the direction of the wind. If needed, build a barrier n front of the unit to protect it from extremely heavy winds.
If the unit is frequently exposed to heavy rain or snow:
Build a shelter above the unit to protect it from the rain or snow. Be careful not to obstruct air flow around the unit.

INSTALL DRAIN JOINT (HEAT PUMP UNIT ONLY)

Before bolting the outdoor unit in place, you must install the drain joint at the bottom of the unit.

NOTE: There are two different types of drain joints depending on the type of outdoor unit.

If the drain joint comes with a rubber seal (see A in Fig. 18), perform the following:

1. Fit the rubber seal on the end of the drain joint that will connect to the outdoor unit.
2. Insert the drain joint into the hole in the base pan of the unit.
3. Rotate the drain joint 90° until it clicks in place facing the front of the unit.
4. Connect a drain hose extension (not included) to the drain joint to redirect water from the unit during heating mode..=

If the drain joint does not come with a rubber seal (see B in Fig. 18), perform the following:

1. Insert the drain joint into the hole on the base pan, press firmly to ensure it is properly installed and will not become loose.
2. Connect a drain hose extension (not included) to the drain joint to redirect water from the unit during heating mode.

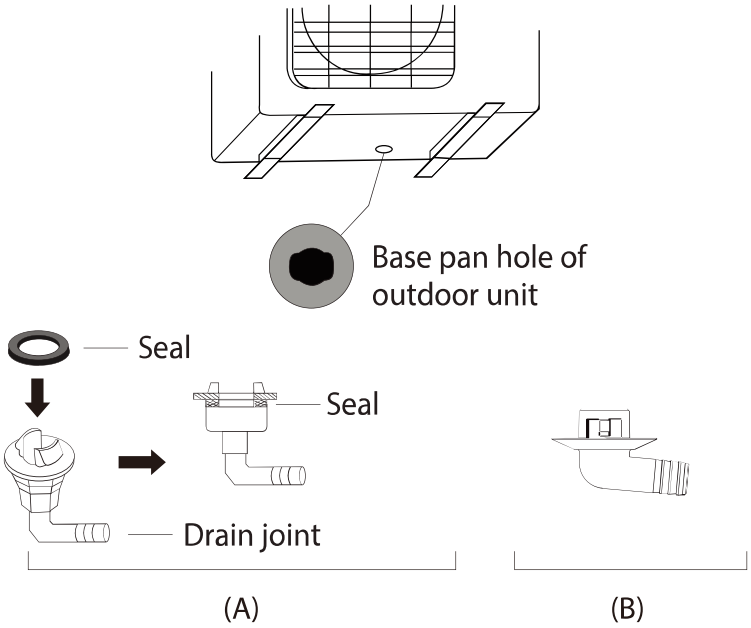

Fig. 18 —Install Drain Joint

⚠ CAUTION

In Cold Climates
In cold climates, make sure that the drain hose is as vertical as possible to ensure swift water drainage. If water drains too slowly, it can freeze in the hose and flood the unit.

DO THE FOLLOWING to install the unit on the ground or on a concrete mounting platform.

1. Mark the positions for four expansion bolts based on dimensions chart.
2. Pre-drill holes for expansion bolts.
3. Place a nut on the end of each expansion bolt.
4. Hammer expansion bolts into the pre-drilled holes.
5. Remove nuts from expansion bolts and place outdoor unit on bolts.
6. Put washer on each expansion bolt, then replace the nuts.
7. Using a wrench, tighten each nut until snug.

WARNING

Wear eye protection at all times when drilling into concrete.

DO THE FOLLOWING to install the unit on a wall-mounted bracket.

1. Mark the position of bracket holes based on dimensions chart.
2. Pre-drill the holes for the expansion bolts.
3. Place a washer and nut on the end of each expansion bolt.
4. Thread expansion bolts through holes in mounting brackets, put mounting brackets in position, and hammer expansion bolts into the wall.
5. Check that the mounting brackets are level.
6. Carefully lift unit and place its mounting feet on brackets.
7. Bolt the unit firmly to the brackets.
8. If allowed, install the unit with rubber isolator pads to reduce vibrations and noise.

CAUTION

Make sure that the wall is made of solid brick, concrete, or of similarly strong material. The wall must be able to support at least four times the weight of the unit.

WIRING PRECAUTIONS

WARNING

READ THE FOLLOWING WARNINGS BEFORE PERFORMING ANY ELECTRICAL WORK.

All wiring must comply with local and national electrical codes, regulations and must be installed by a licensed electrician.

All electrical connections must be made according to the Electrical Connection Diagram located on the panels of the indoor and outdoor units.

If there is a serious safety issue with the power supply, stop work immediately. Explain your reasoning to the client, and refuse to install the unit until the safety issue is properly resolved. Power voltage should be within 90-110% of rated voltage. Insufficient power supply can cause malfunction, electrical shock, or fire.

Installation of an external surge suppressor at the outdoor disconnect is recommended.

Power must be connected, a switch or circuit breaker that disconnects all poles and has a contact separation of at least 1/8in (3mm)

must be incorporated in the fixed wiring. The qualified technician must use an approved circuit breaker or switch.

Only connect the unit to an individual branch circuit. Do not connect another appliance to that circuit.

Make sure to properly ground the air conditioner. Every wire must be firmly connected. Loose wiring can cause the terminal to overheat, resulting in product malfunction and possible fire.

Do not let wires touch or rest against refrigerant tubing, the compressor, or any moving parts within the unit.

To avoid getting an electric shock, never touch the electrical components soon after the power supply has been turned off. After turning off the power, always wait 10 minutes or more before you touch the electrical components.

Make sure that you do not cross your electrical wiring with your signal wiring. This may cause distortion, interference or possibly damage to circuit boards. Connect the outdoor wires before connecting the indoor wires.

WARNING

Turn off the power to the main system before performing any electrical work.

OUTDOOR UNIT WIRING

⚠ WARNING

Turn off the power to the main system before performing any electrical work.

Step 1: Prepare the cable for connection.

1. Choose the right cable size.
2. Using wire strippers, strip the jacket from both ends of the signal cable to reveal approximately 5.9in (150mm) of wire.
3. Strip the insulation from the ends.
4. Stranded wire requires fork terminals or ring terminals to be crimped onto the ends of the wire.

NOTES:

- When connecting the wires, strictly follow the wiring diagram found inside the electrical box cover.
- Choose the cable type according to the local electrical codes and regulations.
- Choose the right cable size according to the Minimum Circuit Ampacity indicated on the nameplate of the unit.

Step 2: Remove the electric cover.

Remove the electric cover of the outdoor unit by loosening the three screws.

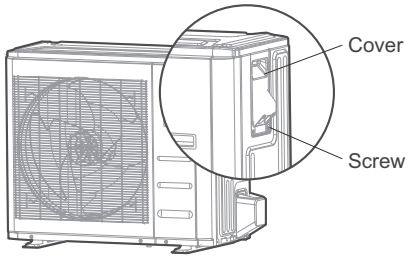

Fig. 19 —Remove Electrical Cover

Step 3: Connect the Fork Terminals to the Terminals

1. Match the wire colors/labels with the labels on the terminal block.
2. Firmly screw the u-lug of each wire to its corresponding terminal

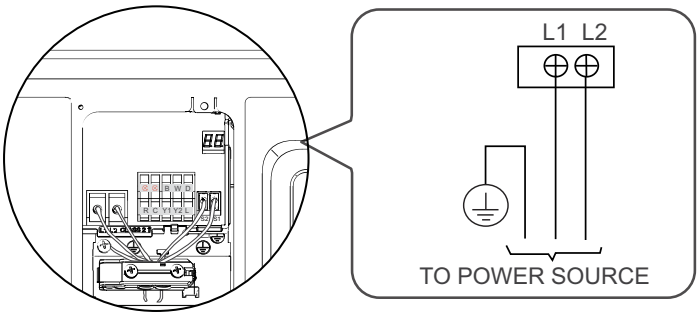

Fig. 20 – Connect Fork Terminals to Terminals (Sizes 18K-24K)

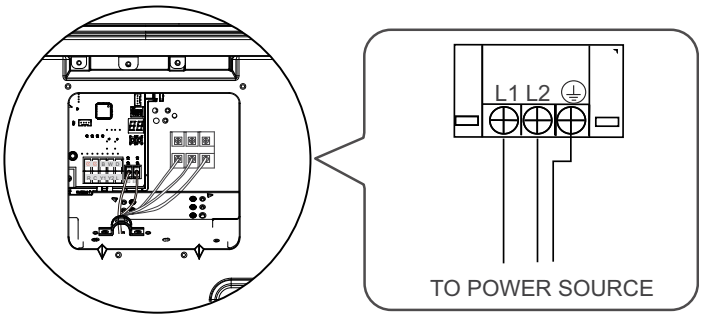

Fig. 21 —Connect Fork Terminals to Terminals (Sizes 30K-60K)

3. Clamp down the cable with the cable clamp.
4. Insulate unused wires with electrical tape. Keep them away from any electrical or metal parts.
5. Reinstall the cover of the electric control box.
6. Remove the wire cover from the unit by loosening the 3 screws.
7. Remove caps on the conduit panel.
8. Mount the conduit tubes (not included) on the conduit panel.
9. Properly connect both the power supply and low voltage lines to the corresponding terminals on the terminal block.
10. Ground the unit in accordance with local codes. Be sure to size each wire allowing several inches longer than the required length for wiring.

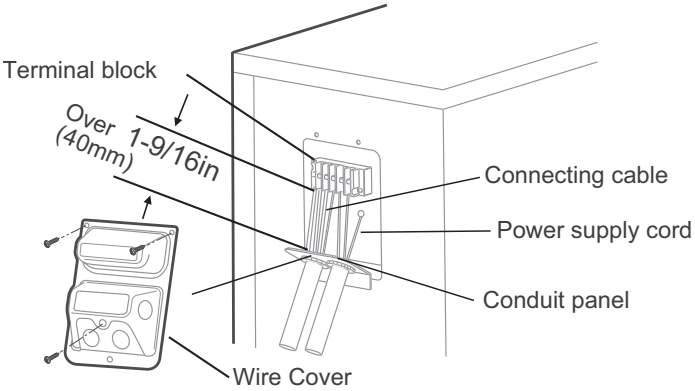

Select the appropriate through-hole according to the diameter of the wire.

Fig. 22 —Outdoor Unit Wiring

⚠ WARNING

Isolate the power supply leads and communication leads by the strain relief and keep the power supply leads away from the communication leads.

SPECIFIC WIRING METHODS

WARNING

Refer to the wiring nameplate for the wiring method. Do not connect 24V AC to S1 - S2, as this will damage the system.

SCENARIO 1:

This is the preferred method of control. This allows a 24 volt thermostat to be used with RS485 communication between the indoor and outdoor units. None of the 24 volt terminals in the outdoor unit can be used with this scenario.

- The **B** terminal and **W** terminal should not be used together at the air handler.
- **W** should only be used with a conventional thermostat for the heat demand at the air handler.
- **DS** is a reserve Terminal.

To use a 24V thermostat, Refer to the following wiring:

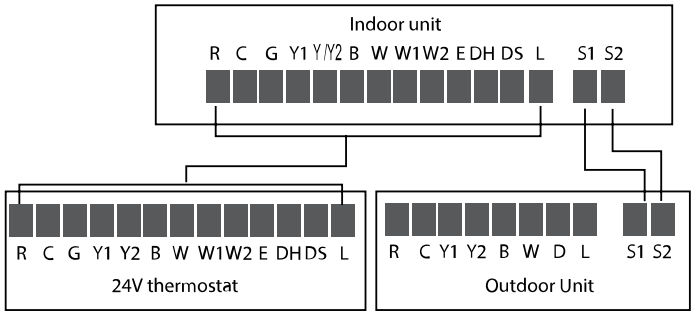

Fig. 23 —Scenario 1

SCENARIO 2 (DEFAULT):

This allows the KSACN1401AAA wired controller to be used with RS485 communication between indoor and outdoor units.

- None of the 24 volt terminals at the air handler or outdoor unit can be used for this scenario
- Using the 1401 wired controller allows for the system to be fully communicating.
- Refer to the 1401 wired controller Owner's Manual for wired controller operating information.

Refer to the wiring method of indoor and outdoor unit communication and wired controller as follows:

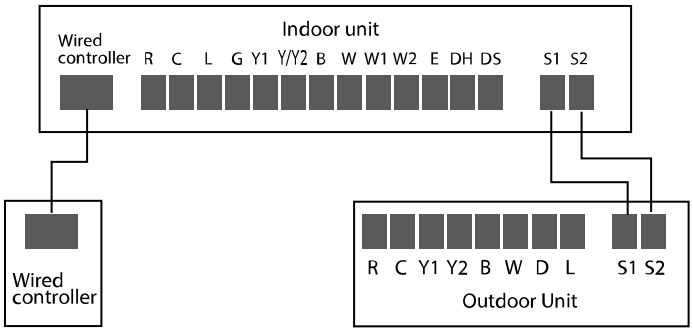

Fig. 24 —Scenario 2 (Default)

NOTE: 24v communication between the indoor and outdoor units is prohibited from use as a standard method of communication due to compliance issues. It can be used for purposes of emergency operation, service procedures, and troubleshooting only. The above wiring methods are approved methods of communication that allow for proper operation, regulatory compliance, and ability to meet published performance ratings.

The SW3 button is not active.

SW4 button should be used for point check inquiry and forced defrost.

NOTE: The use of shielded communication is not required, but is recommended where separation from high voltage conductors can not be maintained, or in areas with high electrical noise. The shield must be grounded at the outdoor unit and stripped back and taped at the indoor unit. Grounding at both ends results in an increase of noise transmitted onto the signal wires.

CROSSOVER WIRING DIAGRAMS

IMPORTANT: For pairing approved Residential furnaces and fan coils with the 37MURA, the KSAIC0701230 Crossover Interface must be provided. Please refer to the below wiring instructions for wiring the 701 interface to approved furnaces (page 21) and fan coils (page 22). For each wiring method, the leak dissipation logic of the furnace and fan coil dissipation board will trigger a corresponding leak detection error code on the interface board display via the alarm input connection on the interface board during a leak detection event or failure.

Wiring Diagram - Single/Two Stage Furnaces

Furnace with variable speed heat pump

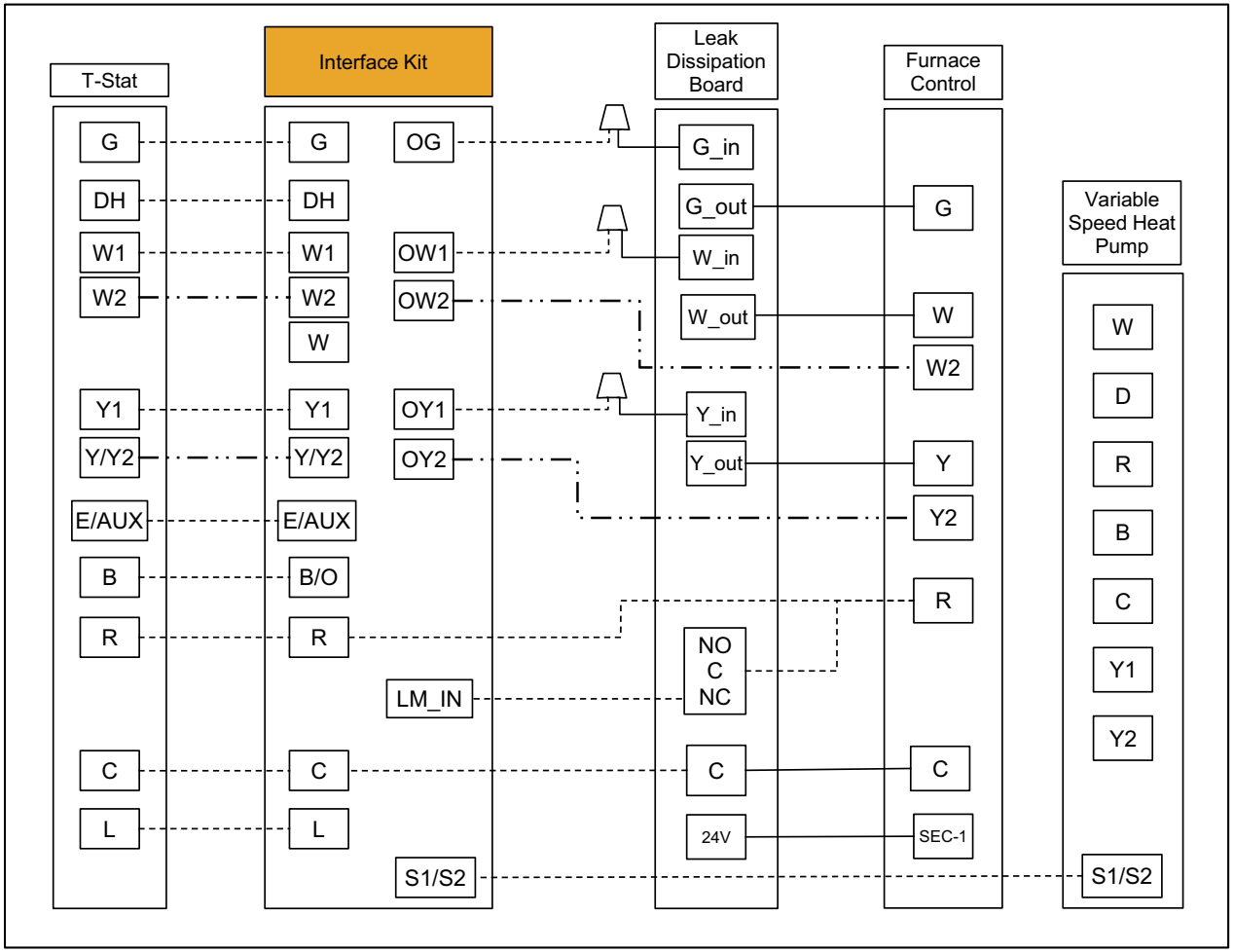

Factory Installed Wiring

Field Wiring (24VAC)

Optional Wiring (24VAC)

Field Splice

Notes:

- Heat pump must have a high pressure switch for dual fuel applications
- The reversing valve in the outdoor unit will still energize in heat pump heating mode; the logic change for O to energize in cool between the 24 volt thermostat, interface, and indoor unit is required to match the proper heat pump heating and cooling airflow associated with Y1 and Y/Y2 heat pump heating and cooling demands.
- Must use dual fuel thermostat for all furnace combinations. Simultaneous heat pump and furnace operation not permitted.
- Refer to indoor unit literature for additional information.
- None of the ODU 24 volt terminals can be used.
- The W terminal on the interface should not be used for dual fuel applications or if emergency heat is desired for use.

IMPORTANT: Interface is only compatible with Crossover Outdoor Units (37MURA/37MUHA).

Manufacturer reserves the right to change, at any time, specifications and designs without notice and without obligations.

Wiring Diagram - Single/Two-Speed Fan Coils

Fancoil with variable speed heat pump

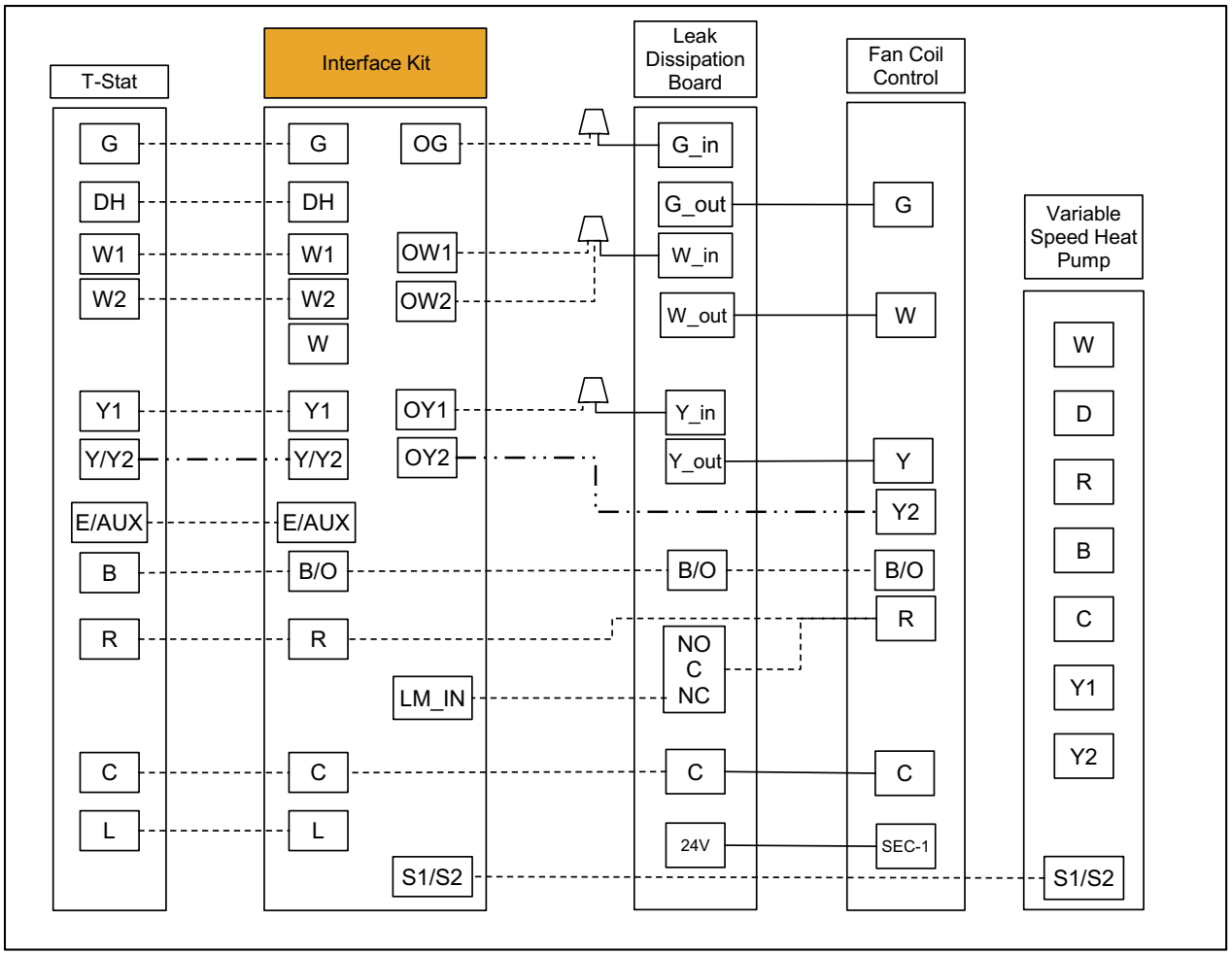

Factory Installed Wiring

Field Wiring (24VAC)

Optional Wiring (24VAC)

Field Splice

Notes:

- Heat pump must have a high pressure switch for dual fuel applications.
- The reversing valve in the outdoor unit will still energize in heat pump heating mode; the logic change for O to energize in cool between the 24 volt thermostat, interface, and indoor unit is required to match the proper heat pump heating and cooling airflow associated with Y1 and Y/Y2 heat pump heating and cooling demands.
- Must use dual fuel thermostat for all furnace combinations. Simultaneous heat pump and furnace operation not permitted.
- Refer to indoor unit literature for additional information.
- None of the ODU 24 volt terminals can be used.
- The W terminal on the interface should not be used for dual fuel applications or if emergency heat is desired for use.

IMPORTANT: Interface is only compatible with Crossover Outdoor Units (37MURA/37MUHA).

Manufacturer reserves the right to change, at any time, specifications and designs without notice and without obligations.

WIRING DIAGRAMS

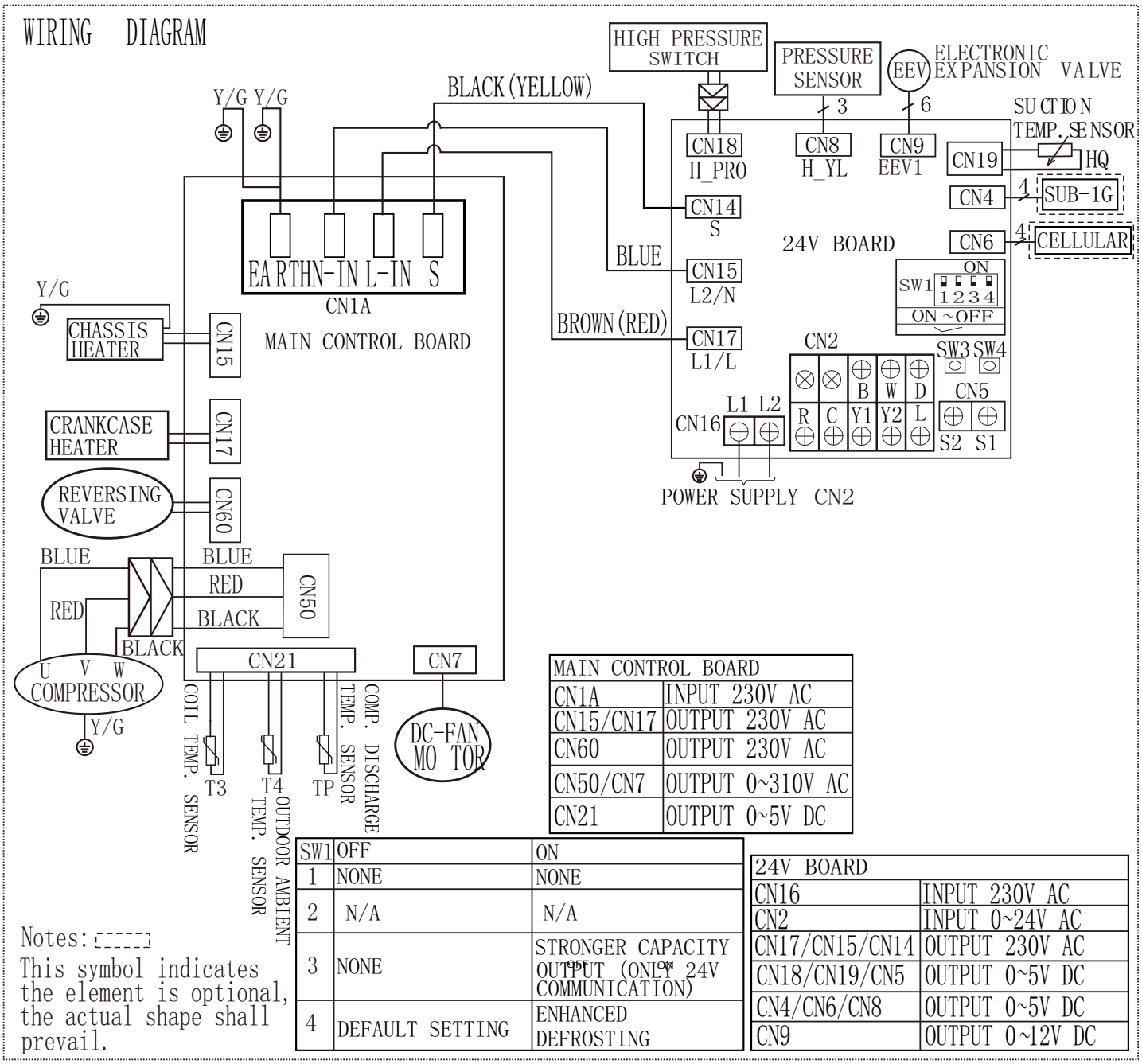

MAIN CONTROL BOARD	
CN1A	INPUT 230V AC
CN15/CN17	OUTPUT 230V AC
CN60	OUTPUT 230V AC
CN50/CN7	OUTPUT 0~310V AC
CN21	OUTPUT 0~5V DC

SW1	OFF	ON
1	NONE	NONE
2	N/A	N/A
3	NONE	STRONGER CAPACITY OUTPUT (ONLY 24V COMMUNICATION)
4	DEFAULT SETTING	ENHANCED DEFROSTING

24V BOARD	
CN16	INPUT 230V AC
CN2	INPUT 0~24V AC
CN17/CN15/CN14	OUTPUT 230V AC
CN18/CN19/CN5	OUTPUT 0~5V DC
CN4/CN6/CN8	OUTPUT 0~5V DC
CN9	OUTPUT 0~12V DC

Fig. 25 — Size 18K

IMPORTANT: 24v communication between the indoor and outdoor units is prohibited from use as a standard method of communication due to compliance issues. It can be used for purposes of emergency operation, service procedures, and troubleshooting only. The above wiring methods are approved methods of communication that allow for proper operation, regulatory compliance, and ability to meet published performance ratings.

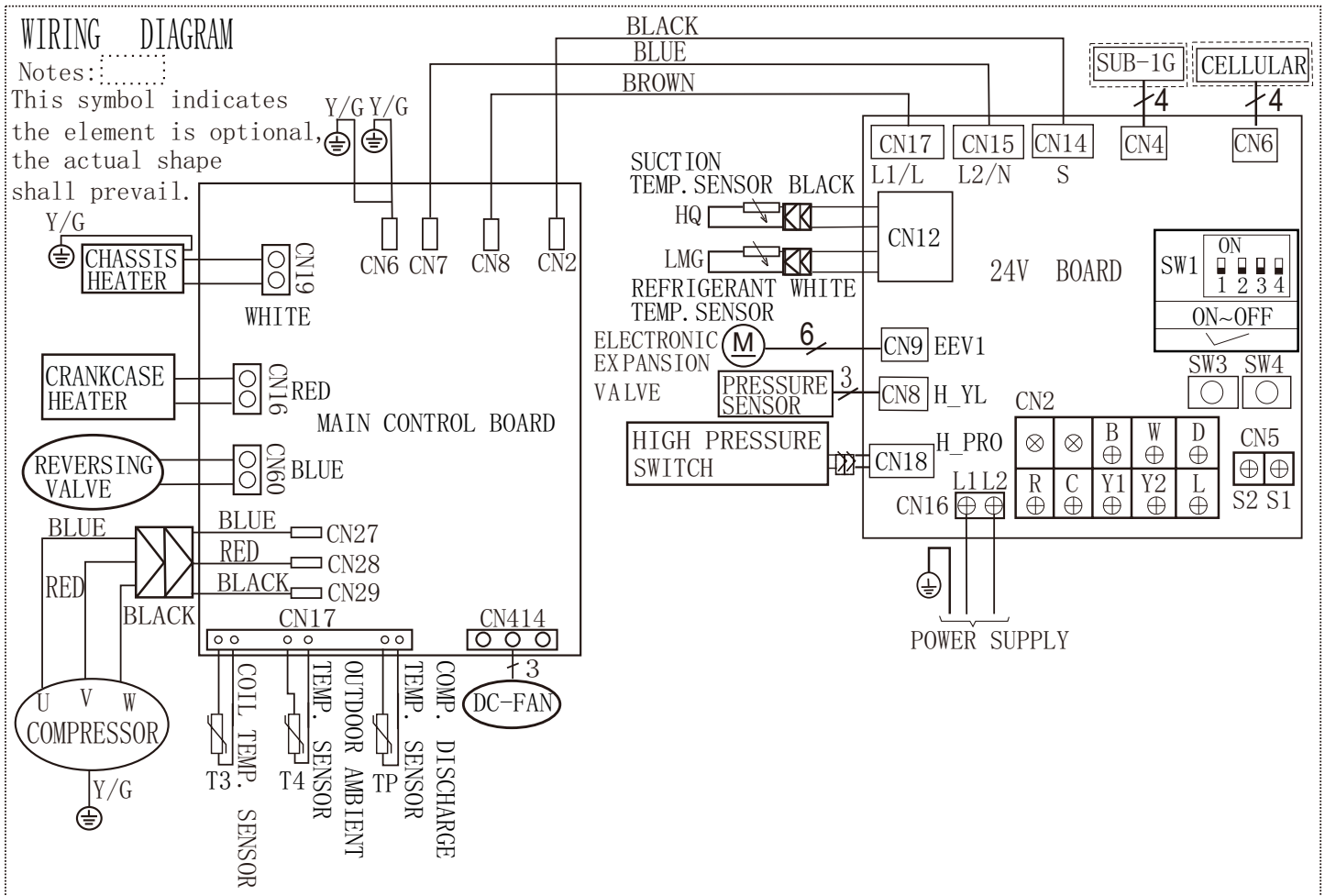

MAIN CONTROL BOARD		24V BOARD	
CN2/CN7/CN8	INPUT 230V AC	CN16	INPUT 230V AC
CN16	OUTPUT 230V AC	CN18/CN12/CN5	OUTPUT 0~5V DC
CN60	OUTPUT 230V AC	CN4/CN6/CN8	OUTPUT 0~5V DC
CN19	OUTPUT 230V AC	CN9	OUTPUT 0~12V DC
CN17	OUTPUT 0~5V DC	CN14/CN15/CN17	OUTPUT 230VAC
CN414	OUTPUT 0~310V AC		
CN27/CN28/CN29	OUTPUT 0~310V AC	CN2	INPUT 0~24VAC

SW1	OFF	ON
1	NONE	NONE
2	N/A	N/A
3	NONE	STRONGER CAPACITY OUTPUT (ONLY 24V COMMUNICATION)
4	DEFAULT SETTING	ENHANCED DEFROSTING

Fig. 26 — Size 24K

IMPORTANT: 24v communication between the indoor and outdoor units is prohibited from use as a standard method of communication due to compliance issues. It can be used for purposes of emergency operation, service procedures, and troubleshooting only. The above wiring methods are approved methods of communication that allow for proper operation, regulatory compliance, and ability to meet published performance ratings.

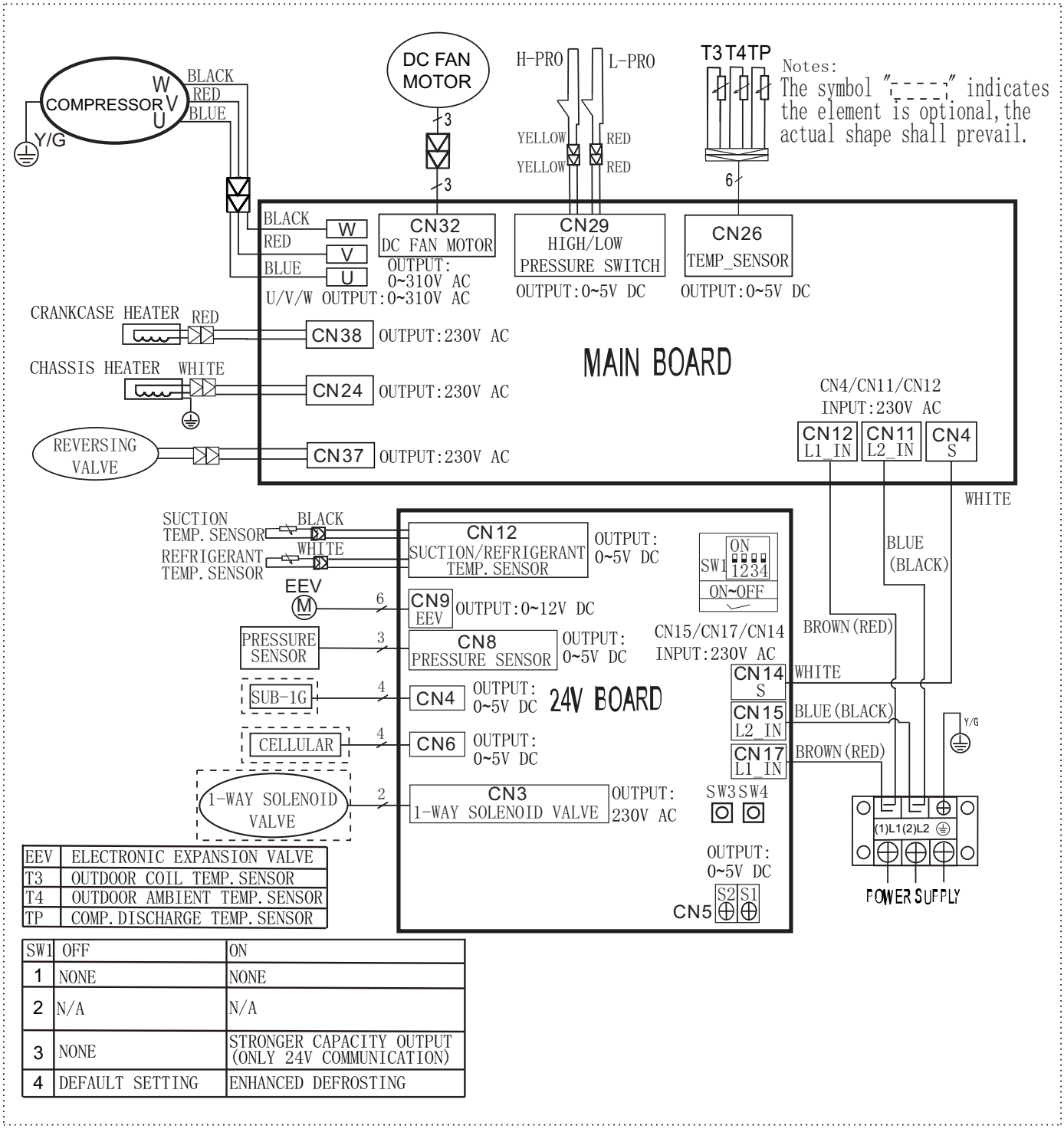

EEV	ELECTRONIC EXPANSION VALVE
T3	OUTDOOR COIL TEMP. SENSOR
T4	OUTDOOR AMBIENT TEMP. SENSOR
TP	COMP. DISCHARGE TEMP. SENSOR

SW1	OFF	ON
1	NONE	NONE
2	N/A	N/A
3	NONE	STRONGER CAPACITY OUTPUT (ONLY 24V COMMUNICATION)
4	DEFAULT SETTING	ENHANCED DEFROSTING

Fig. 27 — Size 30K

IMPORTANT: 24v communication between the indoor and outdoor units is prohibited from use as a standard method of communication due to compliance issues. It can be used for purposes of emergency operation, service procedures, and troubleshooting only. The above wiring methods are approved methods of communication that allow for proper operation, regulatory compliance, and ability to meet published performance ratings.

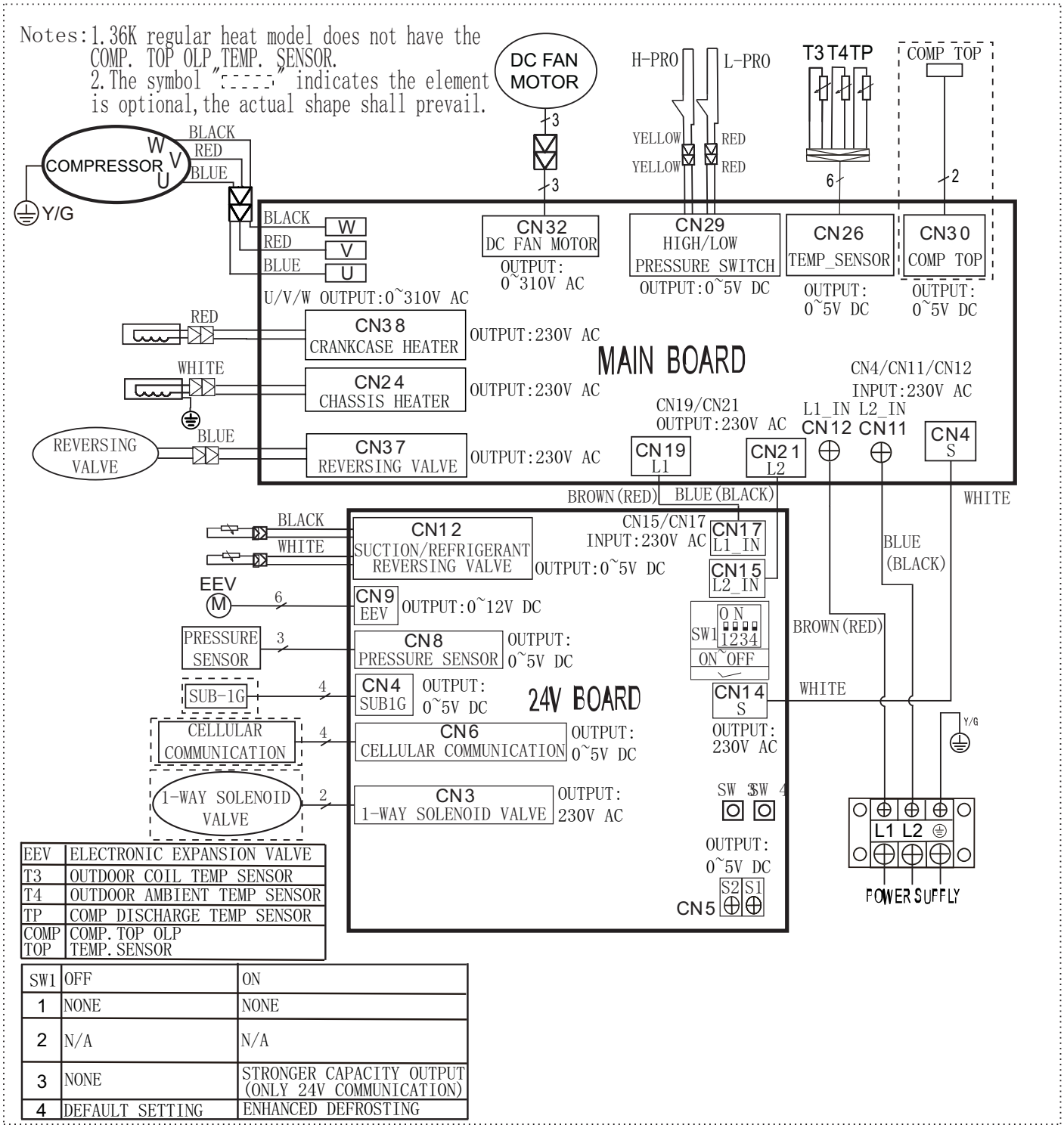

EEV	ELECTRONIC EXPANSION VALVE
T3	OUTDOOR COIL TEMP SENSOR
T4	OUTDOOR AMBIENT TEMP SENSOR
TP	COMP DISCHARGE TEMP SENSOR
COMP TOP	COMP. TOP OLP TEMP. SENSOR

SW1	OFF	ON
1	NONE	NONE
2	N/A	N/A
3	NONE	STRONGER CAPACITY OUTPUT (ONLY 24V COMMUNICATION)
4	DEFAULT SETTING	ENHANCED DEFROSTING

Fig. 28 — Size 36K

IMPORTANT: 24v communication between the indoor and outdoor units is prohibited from use as a standard method of communication due to compliance issues. It can be used for purposes of emergency operation, service procedures, and troubleshooting only. The above wiring methods are approved methods of communication that allow for proper operation, regulatory compliance, and ability to meet published performance ratings.

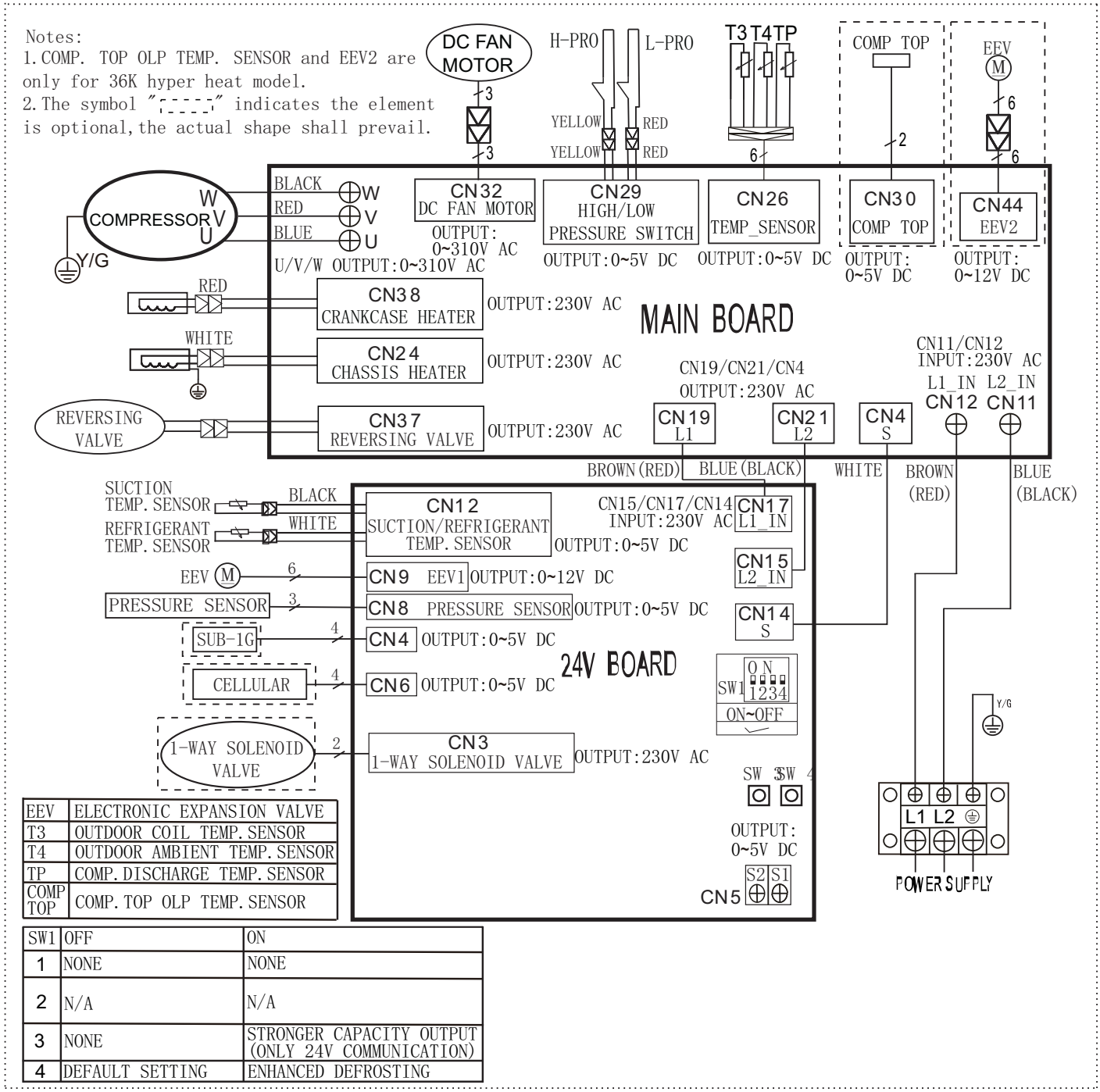

Fig. 29 — Sizes 48K and 60K

IMPORTANT: 24v communication between the indoor and outdoor units is prohibited from use as a standard method of communication due to compliance issues. It can be used for purposes of emergency operation, service procedures, and troubleshooting only. The above wiring methods are approved methods of communication that allow for proper operation, regulatory compliance, and ability to meet published performance ratings.

OUTDOOR UNIT DIP SWITCH SETTING

Press the SW4 button 10S for force defrosting (the SW3 button is not active). Note that forced defrost should only be used to test defrost. All defrost termination conditions will affect the length of time that forced defrost is active.

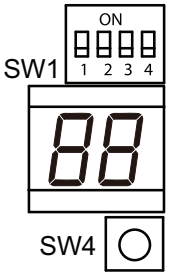

Fig. 30 —Outdoor Unit DIP Switch

No.	Dial Code	Features	ON	OFF
1	SW-1	Function to be defined	N/A	N/A
2	SW-2	Communication dial code	Not available-24 volt communication is prohibited for use	485 communication scheme
3	SW-3	Strong cold and strong heat function	Not available-24 volt communication is prohibited for use	Default settings for scenarios 1 and 2
4	SW-4	Enhanced defrosting function	Enhanced defrosting	Default setting (standard defrost algorithm)

NOTE: SW4 is for forced defrosting, and it is active for all three scenarios.

NOTE: When the SW1-4 is ON, the outdoor unit will have enhanced defrosting function.

If the enhanced defrosting is activated, defrost will be active after 40 minutes of compressor cumulative run time in heat mode.

If standard defrosting is activated, defrost will be active after 90 minutes of compressor cumulative run time in heat mode.

Specific Wiring Methods

SCENARIO 1:

This is the preferred method of control. This allows a 24 volt thermostat to be used with RS485 communication between the indoor and outdoor units.

- The **B** terminal and **W** terminal should not be used together.
- **W** should only be used with a conventional thermostat for the heat demand. None of the outdoor unit 24v terminals are to be used for Scenario 1.
- DS is a reserve Terminal.

To use a 24V thermostat, refer to the Fig. 31.

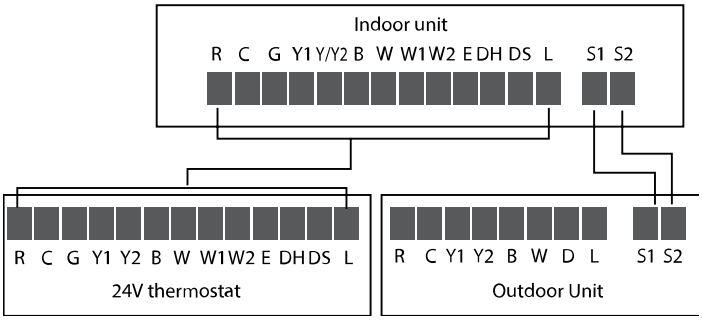

Fig. 31 — Scenario 1

SCENARIO 2 (DEFAULT):

This allows the 1401 wired controller to be used with RS485 communication between indoor and outdoor units.

- None of the 24 volt terminals for the indoor or outdoor unit are to be used for Scenario 2"
- Connect the **Ha/Hb** terminals on the wired controller to the **Ha/Hb** terminals on the indoor display board with 16 AWG shielded/stranded wire.

Refer to the wiring method of indoor and outdoor unit communication and wired controller (See Fig. 32).

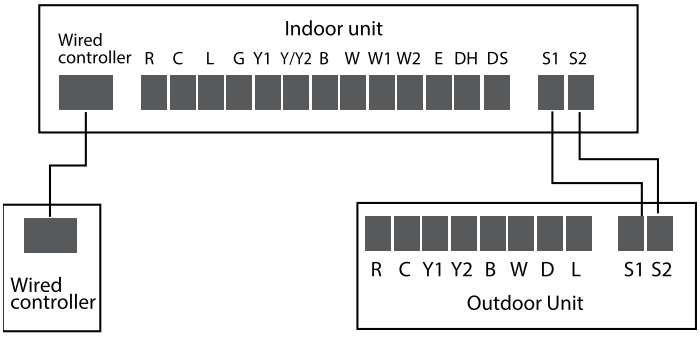

Fig. 32 — Scenario 2 (Default)

NOTE: 24 volt communication between the indoor and outdoor unit is not supported due to compliance restrictions.

Control Logic

Table 11 — Indoor Unit Connector

Connector	Purpose
R	24V power Connection
C	Common
Y1	Low Cooling
Y2	High Cooling
B	Heating Reversing Valve
W	Heating control
D	Defrost control
L	System Fault Signal

LED Display

The control displays unit status as well as any active fault codes on the LED display. If the unit is functioning normally, the LED will be blank. When a fault code is active, the display will flash the active fault code. Please refer to the fault code table located in the troubleshooting section of the Service Manual for detailed fault code information.

SPECIFICATIONS

Table 12 — Cooling and Heating Power Specifications

MODEL (Btu/h)			18K	24K	30K	36K	48K	60K
Power (Outdoor)		Phase	1 Phase					
		Frequency and Voltage	208/230, 60Hz					
Outdoor Unit		MCA	16A	19A	22.5A	24A	36A	39A
		MOP	20A	20A	25A	30A	40A	40A
Line Gauges	Outdoor-Indoor Signal Line	Line Quantity	2					
		Line Diameter (AWG)	16					
	Thermostat Signal Line	Line Quantity	---					
		Line Diameter (AWG)	18					

EVACUATE COIL AND TUBING SYSTEM

⚠ CAUTION

UNIT DAMAGE HAZARD

Failure to follow this caution may result in equipment damage or improper operation.

Never use the system compressor as a vacuum pump.

Refrigerant tubes and the indoor coil should be evacuated using the recommended 1/4 inch deep vacuum method. The alternate triple evacuation method may be used if the procedure outlined below is followed.

NOTE: Always break a vacuum with dry nitrogen.

USING VACUUM PUMP

1. Completely tighten flare nuts A, B, C, D. Connect the manifold gage charge hose to a charge port of the low side service valve (see Fig. 24).
2. Connect the charge hose to vacuum pump.
3. Fully open the low side of manifold gage (see Fig. 33).
4. Start the vacuum pump.
5. Evacuate using either the deep vacuum or triple evacuation method.
6. After evacuation is complete, fully close the low side of manifold gage and stop the vacuum pump operation.
7. The factory charge contained in the outdoor unit is good for up to 25 ft. (8 m) of line length. For refrigerant lines longer than 25 ft. (8 m), add refrigerant, up to the allowable length.
8. Disconnect the charge hose from the charge connection of the low side service valve.
9. Fully open service valves B and A.
10. Securely tighten the service valve caps.

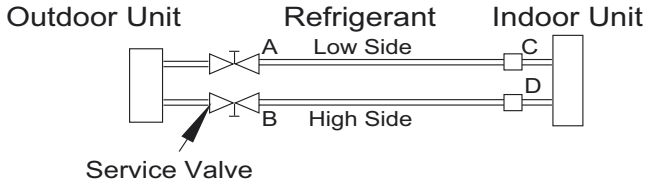

Fig. 33 —Service Valve

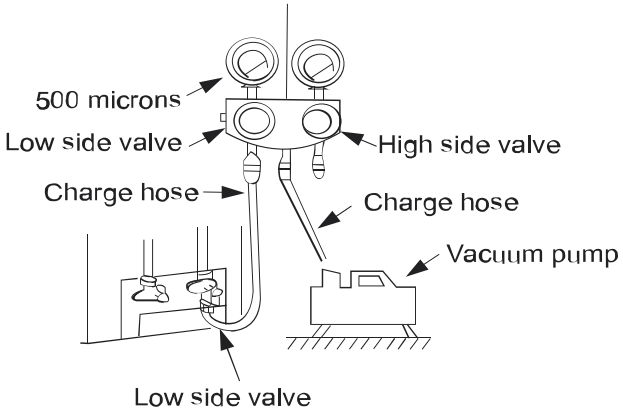

Fig. 34 —Manifold

EVACUATION

Evacuation of the system will remove air or nitrogen (non-condensables) as well as moisture. A proper vacuum will assure a tight, dry system before charging with refrigerant. The two methods used to evacuate a system are the deep vacuum method and the triple vacuum method.

DEEP VACUUM METHOD

The deep vacuum method requires a vacuum pump capable of pulling a vacuum of 1/4 inch and a vacuum gauge capable of accurately measuring this vacuum depth. This method is the most positive way of assuring a system is free of air and moisture (see Figure 35).

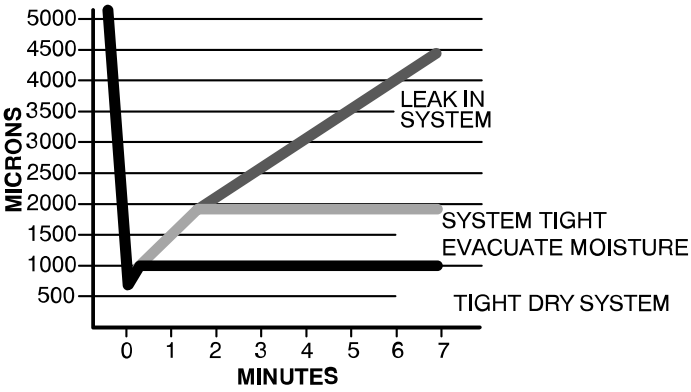

Fig. 35 —Deep Vacuum Graph

TRIPLE EVACUATION METHOD

The triple evacuation method should be used when vacuum pump is not capable of pumping down to 1/4 inch and system does not contain any liquid water. Refer to Fig. 36 and proceed as follows:

1. Attach refrigeration gauges and evacuate system down to 28 inches of mercury and allow pump to continue operating for an additional 15 minutes.
2. Close service valves and shut off vacuum pump.
3. Connect a nitrogen cylinder and regulator to system and flow nitrogen until system pressure is 2 psig.
4. Close service valve and allow system to stand for 1 hour. During this time, dry nitrogen will be able to diffuse throughout the system absorbing moisture.
5. Repeat this procedure as indicated in Fig. 36. System is now free of any contaminants and water vapor.

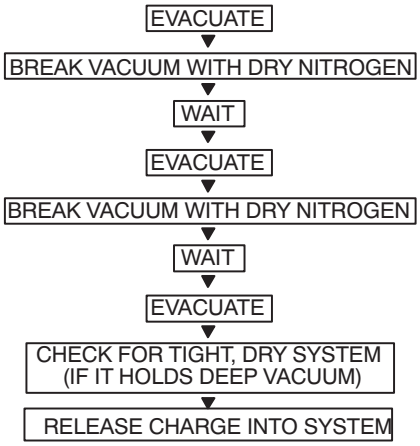

Fig. 36 —Triple Evacuation Method

FINAL TUBING CHECK

Check to be certain factory tubing on both the indoor and outdoor unit has not shifted during shipment. Ensure tubes are not rubbing against each other or any sheet metal. Pay close attention to the feeder tubes, making sure wire ties on feeder tubes are secure and tight.

ADDING REFRIGERANT

⚠ CAUTION

DO NOT mix refrigerant types.

Some systems require additional charging depending on pipe lengths. In North America, the standard pipe length is 25ft (7.5m). The refrigerant should be charged from the service port on the outdoor unit's low pressure valve. The additional refrigerant to be charged can be calculated using Table 6:

TEST RUN

⚠ CAUTION

Failure to perform the test run may result in unit damage, property damage, or personal injury.

BEFORE TEST RUN

A test run must be performed after the entire system has been completely installed. Confirm the following points before performing the test:

- Indoor and outdoor units are properly installed.
- Piping and wiring are properly connected.
- No obstacles near the inlet and outlet of the unit that might cause poor performance or product malfunction.
- Refrigeration system does not leak.
- Drainage system is unimpeded and draining to a safe location.
- Heating insulation is properly installed.
- Grounding wires are properly connected.
- Length of the piping and additional refrigerant capacity have been recorded.
- Power voltage is the correct voltage for the unit.

TEST RUN INSTRUCTIONS

1. Open both the liquid and gas service valves.
2. Turn on the main power switch and allow the unit to warm up.
3. Set the UNIT to COOL mode.
4. For the Indoor Unit:
   a. Double check to see if the room temperature is being registered correctly.
   b. Check to see that the drainage system is unimpeded and draining smoothly.
   c. Ensure there is no vibration or abnormal noise during operation.
5. For the Outdoor Unit
   a. Check to see if the refrigeration system is leaking.
   b. Make sure there is no vibration or abnormal noise during operation.
   c. Ensure the wind, noise, and water generated by the unit do not disturb your neighbors or pose a safety hazard.
6. Drainage Test
   a. Ensure the drainpipe flows smoothly. New buildings should perform this test before finishing the ceiling.
   b. Turn on the main power switch and run the unit in COOL mode.
   c. Check to see that the water is discharged. It may take up to one minute before the unit begins to drain depending on the drainpipe.
   d. Make sure that there are no leaks in any of the piping.
   e. Stop the unit. Turn off the main power switch and reinstall the test cover.

NOTE: If the unit malfunctions or does not operate according to your expectations, please refer to the Troubleshooting section of Service Manual before calling customer service.

TROUBLESHOOTING

For ease of service, the systems are equipped with diagnostic code display LEDs on both the indoor and outdoor units. The outdoor diagnostic display consists of two LEDs (Red and Green) on the outdoor unit board and is limited to a few errors.

The indoor diagnostic display is a combination of flashing LEDs on the display panel or the front of the unit. If possible, always check the diagnostic codes displayed on the indoor unit first.

The diagnostic codes displayed on the indoor unit are listed in Table 13.

INDOOR UNIT DIAGNOSTIC GUIDES

Table 13 — Error Codes

Display	Malfunction and Protection Indication	Display	Malfunction and Protection Indication
EL01	IDU and ODU Communication Error	PC08	ODL Current Protection
EC07	Outdoor DC fan motor speed out of control	PC10	ODL AC voltage too low protection
EC51	ODU EEPROM error	PC11	ODL DC bus voltage too high protection
EC52	Condenser coil temperature sensor (T3) error	PC12	ODL DC bus voltage too low protection
EC53	ODU temperature sensor (T4) error	PC30	System pressure overload protection
EC54	ODU exhaust temperature sensor error	PC31	System pressure too low protection
EC55	ODU IPM module temperature sensor error	PC40	Communication failure between outdoor main control chip and the driver chip
EC56	ODU T2B sensor	PC41	Compressor current sampling circuit failure
EH00	IDU EEPROM error	PC42	Compressor starting failure
EH0A	Indoor EEPROM Parameter error	PC43	Compressor lost phrase protection
EHC1	Refrigerant Sensor detects a leak	PC44	Compressor zero speed protection
EHC2	Working condition of the refrigerant sensor is out of range and a leak is detected	PC45	Voltage drop
EHC3	Working condition of the refrigerant sensor is out of range	PC46	Compressor speed out of control
EH02	Zero-crossing signal detection error	PC49	Compressor over current error
EH03	Indoor fan motor speed is out of control	PC0A	Condenser high temperature protection
EH31	Protection for low DC bus voltage of the external fan	PC0F	PFC failure
EH32	Protection for high DC bus voltage of the external fan	PC0L	Outdoor low temperature protection
EH60	IDU ENV temperature T1 sensor error	PH09	IDU anti-cold wind stop machine
EH61	IDU pipe temperature T2 sensor error	PH90	Evaporator high temperature protection
EH0b	IDU PCB and display communication error	PH91	Evaporator low temperature protection
FH0C	Indoor Unit humidity sensor malfunction	LC01	Condenser high temperature frequency limited (L1)
FHCC	Refrigerant Sensor Error	LC02	Compressor Discharge Pipe High temperature frequency limited (L2)
EL01	IDU and ODU Communication Error	LC03	Current frequency limited (L3)
EL0C	System leaks refrigerant	LC05	Voltage frequency limited (L5)
FH0P	Wireless Module Self-Test Failure	LC06	IPM module temperature frequency limited
FL09	New and old platform mismatch failure	LH00	Evaporator temperature frequency limited (L0)
PC00	ODU IPM Protection	LH07	Remote Control frequency limitation in effect
PC01	ODU Voltage Protection		
PC02	Compressor top temperature (IPM module temperature protection)	---	Mode conflict fault
		nA	No fault or protection
PC03	System Pressure Protection		

Table 14 — Leak Detection Error Codes

EHC1	Refrigerant Sensor detects a leak
EHC2	Working condition of the refrigerant sensor is out of range and a leak is detected

If you receive an EHC1 or EHC2 code, call a technician as soon as possible. No need to panic, the unit goes into TURBO mode until the error code is cleared. There is a “beep” noise coming from the indoor unit, which is normal in this case.

For additional diagnostic information, refer to the Service Manual.

Manufacturer reserves the right to change, at any time, specifications and designs without notice and without obligations.

NOTE: Start Up Checklist is recommended not required.

CROSSOVER START-UP CHECKLIST

Installation Data

Site Address:_____

City:_____ **State:**_____ **Zip Code:**_____

Installing Contractor:_____ **Contractor Contact #:** ( ) _____-_____

Job Name:_____ **Start-up Date:**_____

Distributor:_____

System Details

Units	Model No.	Serial No.	Controller
OUTDOOR UNIT			
INDOOR UNIT A			

Wiring Electrical

Wire Size and Type Used? AWG:_____ TYPE:_____

Are there any breaks, splices, wire nuts or butt connectors between the outdoor unit and the indoor door unit? YES:_____ NO:_____

Was the wiring from the outdoor unit port to the correct indoor unit verified? YES:_____ NO:_____

REMARKS:_____

_____

Voltage Check

Wiring: Single zone _____

Outdoor Unit Disconnect	1(L1):GND		Outdoor Unit Terminal Block	1(L1):GND		NOTES:_____
	2(L2):GND			2(L2):GND		
	1(L1):L2(2)			1(L1):2(L2)		
Indoor Unit Voltage Check @ Outdoor Unit	1(L1):GND		Indoor Unit Voltage Check @ Indoor Unit	1(L1):GND		NOTES:_____
	2(L2):GND			2(L2):GND		
	1(L1):2(L2)			1(L1):2(L2)		
	2(L2):3(S)			2(L2):3(S)		

Crossover Start-Up Checklist (CONT)

Piping

Leak Check:

System held 500 psig (max. 550psi) for a minimum of 30 minutes using dry nitrogen. **YES:_____ NO:_____**

Evacuation Method:

- **Was the Triple Evacuation Method used as outlined in the installation manual?** **YES:_____ NO:_____**
- **Was the Deep Vacuum Method used as outlined in the installation manual?** **YES:_____ NO:_____**
- **Did the System Hold 500 microns for 1 hour?** **YES:_____ NO:_____**
- **Does the line set match the diameter of the evaporator connections?** **YES:_____ NO:_____**

Single Zone Piping:

Has the liquid pipe length been measured and the additional charge calculated? Size:_____ Length:_____ Charge:_____

Notes:

PORT	LIQUID SIZE		SUCTION SIZE		LENGTH	CHARGE
A						

NOTES:_____

Performance Check

For 1:1 Single Zone Systems: Adjust the set-point to create an operational call for the desired testing operation. Allow the system to run for a minimum of 10 min. and record the following details:

(Operational data recorded on applicable heads with the wireless remote controller's Point Check function)

UNIT	SET-POINT	MODE	T1	T2	T3	T4	Tb	Tp	Th	LA/Lr
A										

Error Codes

Were there any error codes present at start-up? YES:_____ NO:_____

		Notes:
Indoor Unit Error Code:		
Outdoor Unit Error Code:		
Wall Controller:		
24V Interface:		

Comments:

_____

_____

_____

NOTES:

© 2026 Carrier. All rights reserved.
Edition Date: 09/26
Catalog No: **37MURA-04SI**
Replaces: 37MURA-03SI

Manufacturer reserves the right to change, at any time, specifications and designs without notice and without obligations.