bryant

day & night

Payne

# installation instructions

# SINGLE-PACKAGE COOLING UNITS

**559G**

**025-060 (50HZ)**

Cancels: New

40559DP3-A
7/15/87

## CONTENTS


Page

**SAFETY CONSIDERATIONS** ..... 1
**INSTALLATION** ..... 1-5
**Step 1—Check Equipment and Jobsite** ..... 1
- UNPACK UNIT
- INSPECT EQUIPMENT
- COMPLETE SYSTEM REQUIREMENTS

**Step 2—Mount Unit** ..... 1
- ON THE GROUND
- ON THE ROOF

**Step 3—Make Ductwork Connections** ..... 1
- CONNECT RETURN AND SUPPLY AIR DUCTWORK

**Step 4—Provide for Cooling Cycle Condensate Disposal** ..... 3
- CONNECT DRAIN LINE

**Step 5—Make Electrical Connections** ..... 3-5
- INSTALL A BRANCH CIRCUIT DISCONNECT PER NEC
- ROUTE LINE POWER LEADS INTO UNIT
- CONNECT GROUND LEAD TO GROUND LUG
- SET INDOOR FAN MOTOR SPEED
- ROUTE CONTROL POWER WIRES
- ELECTRIC HEATER INSTALLATION

**START-UP** ..... 6
**SERVICE** ..... 6-13


## SAFETY CONSIDERATIONS

Installing and servicing air conditioning equipment can be hazardous due to system pressure and electrical components. Only trained and qualified service personnel should install or service air conditioning equipment.

Untrained personnel can perform basic maintenance functions such as cleaning coils and filters and replacing filters. All other operations should be performed by trained service personnel. When working on air conditioning equipment, observe precautions in the literature and on tags and labels attached to unit.

Follow all safety codes. Wear safety glasses and work gloves. Use quenching cloth for brazing operations. Have fire extinguisher available.

**WARNING:** Before performing service or maintenance operations on system, turn off main power switches to unit. Turn off accessory heater power switch if applicable. Electrical shock can cause personal injury.

## INSTALLATION

### Step 1—Check Equipment and Jobsite

UNPACK UNIT—Move unit to final location. Lift off carton taking special care not to damage unit.

INSPECT EQUIPMENT—File claim with shipping company if shipment is damaged or incomplete.

COMPLETE SYSTEM REQUIREMENTS before installing.

Consult local building codes and National Electrical Code (NEC) for special installation requirements.

Provide sufficient space for condenser airflow clearance, wiring, and servicing unit. See Figures 1 and 2. Locate unit where supply and return air ducts can be conveniently brought out to unit duct connections.

Unit may be placed with duct side as close to building as top removal, duct connections and power connections permit. Position unit so water or ice from roof does not drop directly on top of unit or in front of coil. Make provisions for condensate drainage. Maintain a 1.22-m (4-ft) clearance above unit for vertical air discharge.

Roof installation method for 559G depends on building construction and special requirements of local building codes. Ensure that roof can support unit weight.

### Step 2—Mount Unit

ON THE GROUND—Mount unit on a solid, level pad. Construct pad as shown in Figure 1. Front of unit with condensate trap should be flush with pad for proper trap positioning (see Figure 2). Extend a 610-mm (24-in.) gravel apron around pad for condensate drainage.

ON THE ROOF—Mount unit on a level platform or frame. Elevate unit for proper clearance as described under Ground Installation above. Design roof and plan water runoff in accordance with applicable codes to prevent unit and duct flashing from sitting in water.

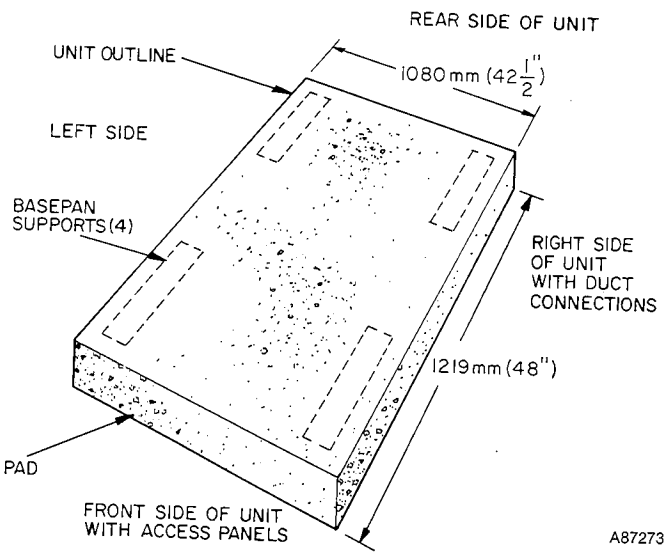


NOTES
1. Extend a 610-mm (24-in.) gravel apron around pad.
2. Provide a 914-mm (3-ft) service clearance at front and rear sides of unit.

**Figure 1—Pad Dimensions**

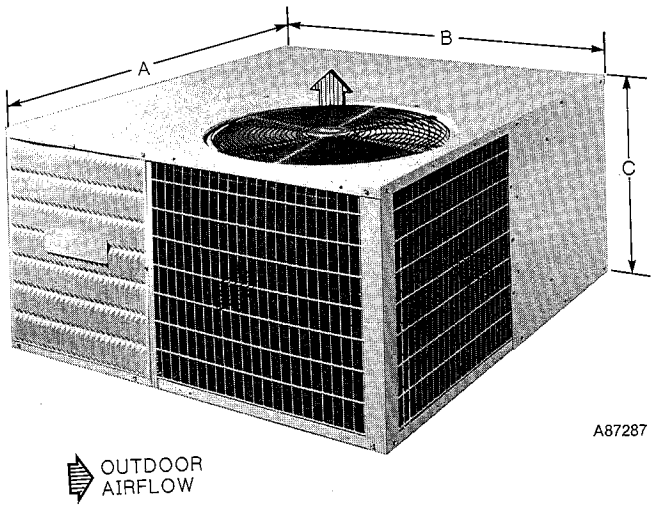


LEFT-SIDE VIEW

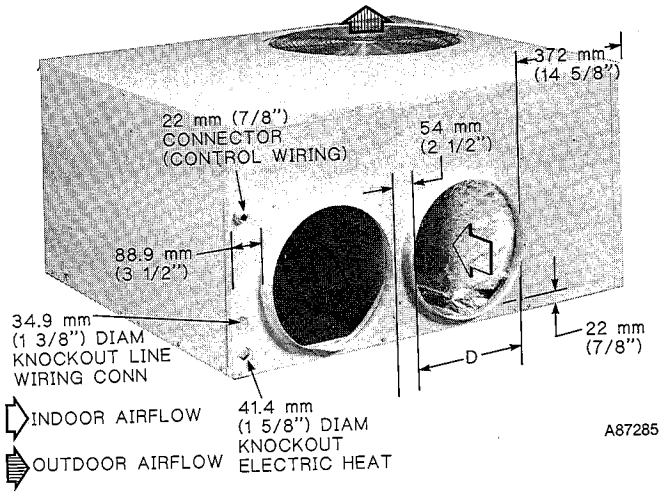


RIGHT-SIDE VIEW—MODELS 025—040 (Typical)

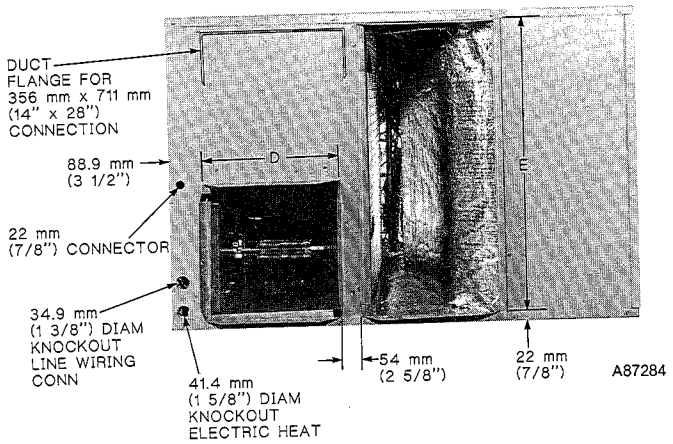


RIGHT-SIDE VIEW—MODELS 050—060

**Figure 2—Dimensions and Connections, mm (in.)**

## TABLE I—PHYSICAL DATA AND DIMENSIONS

| MODEL 559G | | 025 | 030 | 035 | 040 | 050 | 060 |
|---|---|---|---|---|---|---|---|
| REFRIG (R-22) Oper Charge, kg (lb) | | 2.22 (4.9) | 2.40 (5.3) | 2.49 (5.5) | 2.77 (6.1) | 3.63 (8.0) | 3.63 (8.0) |
| SHIPPING WEIGHT, kg (lb) | | 157 (346) | 171 (377) | 180 (397) | 199 (438) | 216 (476) | 229 (504) |
| DIMENSIONS, mm (in.) | A | 1219 (48) | | | | | |
| | B | 1070 (42-1/8) | | | | | |
| | C* | 485 (19-1/8) | 562 (22-1/8) | 622 (24-1/2) | 743 (29-1/4) | 832 (32-3/4) | |
| DUCT CONNECTIONS, mm (in.) | D | Side-By-Side Round 356 (14) | | | | Side-By-Side Rectangular 356 (14) | |
| | E | — | | | | 711 (28) | |
| FILTER SIZE, mm (in.)† Disposable | | 508 x 635 (20 x 25) | (2) 381 x 508 (15 x 20) | 381 x 508 (15 x 20) 508 x 508 (20 x 20) | (2) 508 x 508 (20 x 20) | 508 x 508 (20 x 20) 508 x 635 (20 x 25) | 635 x 635 (25 x 25) 508 x 635 20 x 25) |
| Permanent | | 381 x 508 (15 x 20) | 508 x 508 (20 x 20) | 508 x 635 (20 x 25) | 508 x 635 (20 x 25) | (2) 381 x 508 (15 x 20) | (2) 508 x 508 (20 x 20) |

*Dimension C includes 19-mm (3/4-in.) built-in base support channels.
†Recommended field-supplied filters are 25.4 mm (one in.) thick.

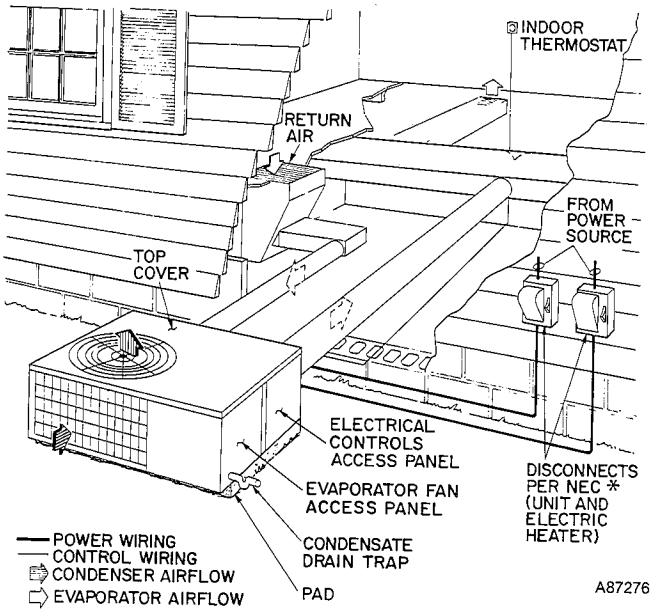


**Figure 3—Typical Installation**

### Step 3—Make Ductwork Connections

CONNECT RETURN AND SUPPLY AIR DUCTWORK—Connect ductwork to unit supply and return air duct connections. Refer to Figure 2 and Table I for unit supply and return air connection sizes and locations.

Flanges are provided on Models 025-040 for round duct connections, on Models 050-060 for rectangular duct connections.

Figure 3 shows a typical duct system with 559G installed. Do not operate unit longer than 5 minutes without ductwork or damage to blower motor may result. When designing and installing ductwork, consider the following.

1. When connecting ductwork to 040, 050 and 060 units, do not drill deeper than 25 mm (one in.) in shaded area shown below. Coil may be damaged.

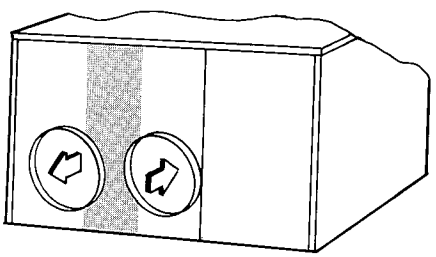


2. All units should have field-supplied filters installed in return air ductwork. Recommended sizes for filters are shown in Table 1.
3. Avoid abrupt duct size increases and reductions. An abrupt change in duct size adversely affects air performance.
4. Use flexible connectors between ductwork and unit to prevent transmission of vibration. When electric heater is installed, use fireproof canvas (or similar heat resistant material) connector between ductwork and unit discharge connection. If flexible duct is used, insert a sheet metal sleeve inside duct. Heat resistant duct connector (or sheet metal sleeve) must extend 607 mm (24 in.) from electric heater element.
5. Size ductwork for cooling air quantity (L/s) (cfm). The minimum air quantity for proper electric heater operation is listed below. Heater limit switches may trip air quantities below those recommended.

| MODEL 559G | MIN L/S (CFM) |
|---|---|
| 025 | 413 ( 875) |
| 030 | 413 ( 875) |
| 035 | 614 (1300) |
| 040 | 661 (1400) |
| 050 | 802 (1700) |
| 060 | 849 (1800) |

6. Insulate and weatherproof all external ductwork. Insulate and cover with a vapor barrier all ductwork passing through unconditioned spaces. Follow latest SMACNA (Sheet Metal and Air Conditioning Contractors National Association) and NESCA (National Environmental Systems Contactors Association) minimum installation standards for residential heating and air conditioning systems.
7. Secure all ducts to building structure. Weatherproof duct openings in wall or roof according to good construction practices.

**Step 4—Provide for Cooling Cycle Condensate Disposal**—Condensate may be drained directly onto gravel apron or connected by drain line(s) to a dry well. Follow local codes.

CONNECT DRAIN LINE to rubber condensate drain fitting on side of unit (see Figure 4). Use clamp provided. Install factory-supplied condensate trap (taped to indoor fan compartment for shipment) at end of drain line. If a drain line is not used, connect condensate trap to unit drain fitting as shown in Figure 3. Prime trap at beginning of cooling season start-up.

**Step 5—Make Electrical Connections**—Install field wiring in compliance with local and national fire, safety and electrical codes. Be sure voltage to unit is within ± 10% of voltage indicated on nameplate. Contact local power company for correction of improper line voltage.

**NOTE:** Operation of unit on improper line voltage constitutes abuse and may cause unit damage that could affect warranty. See Table II for recommended fuse sizes.

INSTALL A BRANCH CIRCUIT DISCONNECT of adequate size to handle unit starting current. Provide a separate disconnect for unit and for each accessory electric heater circuit as required. (See electric heater Installation, Start-Up and Service Instructions.) Locate disconnect(s) within sight from, and readily accessible from, the unit.

ROUTE LINE POWER LEADS INTO UNIT—Extend leads from disconnect through hole provided (Figure 2) into line wiring splice box. Use copper wire only.

CONNECT GROUND LEAD TO GROUND LUG in splice box for safety. Connect power wiring. See Figure 6. Connect line power leads to yellow and black pigtails on single-phase units. On 3-phase units, connect line power leads to yellow, black, and blue pigtails.

SET INDOOR FAN MOTOR SPEED—Refer to page 3 for minimum allowable air quantity for safe electric heater operation. Two-speed indoor fan motor is factory wired for low-speed operation on all models. Fan motor is equipped with spade-type speed selector terminals marked 1 and 3.

| MOTOR TERMINAL | 1 | 3 |
|---|---|---|
| FAN SPEED | High | Low |

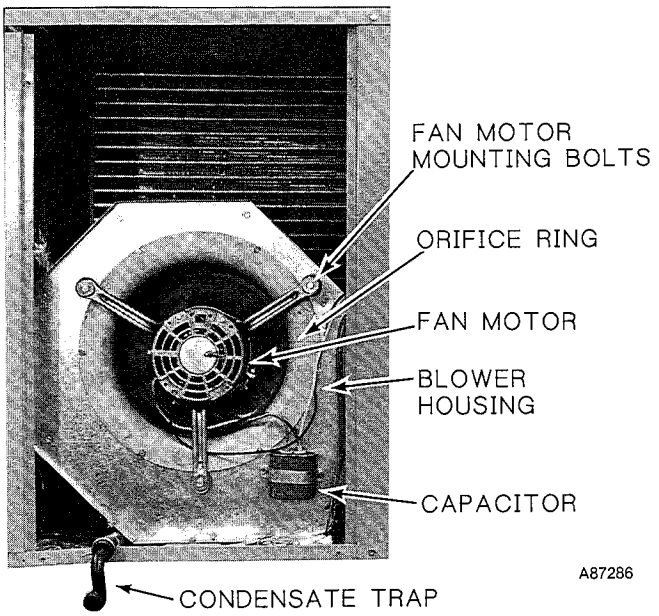


**Figure 4—Condensate Drain and Trap Details**

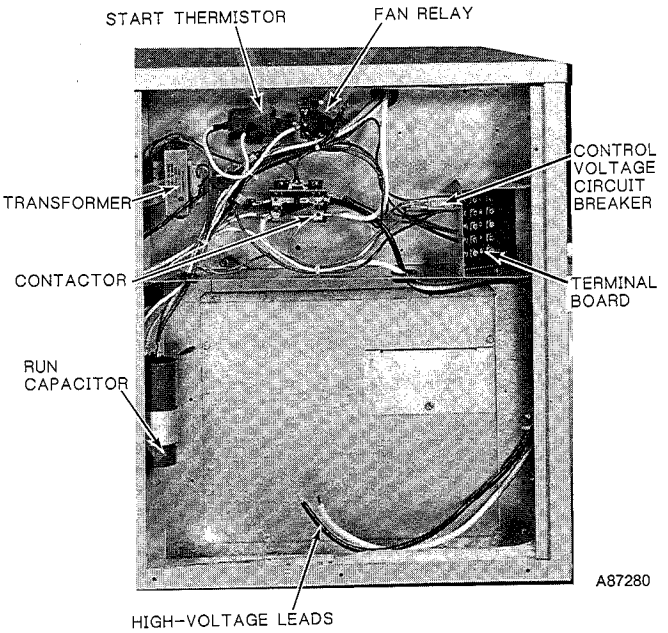


**Figure 5—Control Section**

## TABLE II—UNIT ELECTRICAL DATA (50 Hz)

| MODEL 559G | V-PH | OPER VOLTAGE* | | COMPR | | IFM | OFM | MAX FUSE† or HACR CKT BKR Amps | MCA |
|---|---|---|---|---|---|---|---|---|---|
| | | Max | Min | LRA | RLA | FLA | FLA | | |
| 025 | 400-3 | 440 | 360 | 26.5 | 4.5 | 2.0 | 0.7 | 10 | 8.3 |
| 030 | | | | 35.0 | 5.8 | 1.5 | 0.7 | 15 | 9.5 |
| 035 | | | | 41.0 | 6.9 | 2.0 | 1.5 | 15 | 12.1 |
| 040 | | | | 46.0 | 8.0 | 2.0 | 1.5 | 25 | 15.5 |
| 050 | | | | 62.0 | 9.6 | 2.0 | 1.5 | 25 | 15.5 |
| 060 | | | | 69.0 | 11.4 | 4.0 | 2.0 | 30 | 20.3 |

**FLA** —Full Load Amps
**HACR** —Heating, Air Conditioning and Refrigeration
**IFM** —Indoor Fan Motor
**LRA** —Locked Rotor Amps
**MCA** —Minimum Circuit Amps
**OFM** —Outdoor Fan Motor
**RLA** —Rated Load Amps

*Permissible limits of the voltage range at which units will operate satisfactorily.
†Maximum dual element fuse.
NOTE: Use copper wire only.

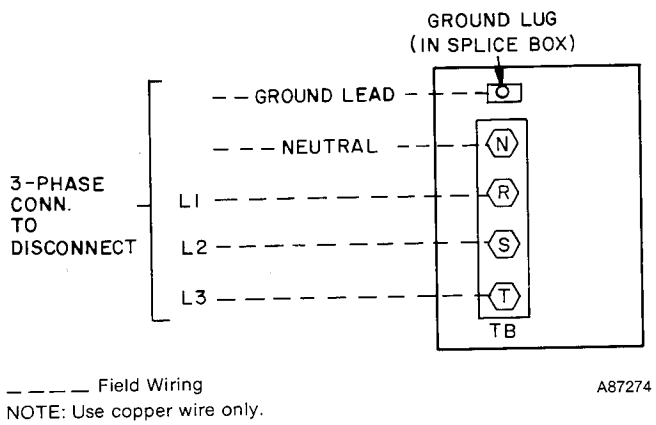


NOTE: Use copper wire only.

**Figure 6—Line Power Connections**

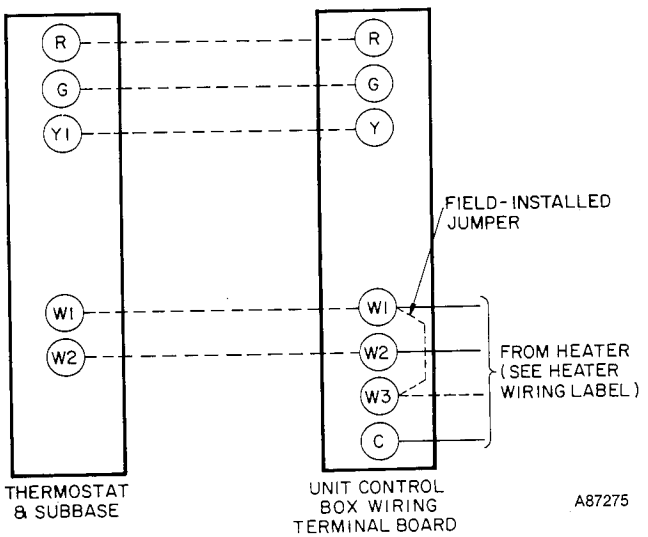


**Figure 7—Control Connections (Typical)**

ROUTE CONTROL POWER WIRES (24v) through 22-mm (7/8-in.) connector provided in unit, Figure 2. Extend leads to unit control wiring terminal board in unit control box, Figure 5. Connect leads to terminal board as shown in Figure 7.

The unit transformer supplies 24-v power for complete system including accessory electric heater. A resettable circuit breaker is provided in the 24-v circuit.

ELECTRIC HEATER INSTALLATION—For complete heater installation data, refer to separate accessory electric heater Installation Instructions.

## START-UP

If an accessory crankcase heater is used, energize heater a minimum of 24 hours before starting unit. To energize heater only, turn the thermostat to OFF position and energize electrical disconnects.

**Heat Anticipator Settings for Room Thermostat**—Set

## TABLE III—AIR DELIVERY PERFORMANCE

### SI (L/s)

| MODEL 559G | UNIT VOLTAGE | BLOWER MOTOR SPEED | COIL | EXTERNAL STATIC PRESSURE (kPa) | | | | | | | | | | |
|---|---|---|---|---|---|---|---|---|---|---|---|---|---|---|
| | | | | 0.000 | 0.024 | 0.050 | 0.074 | 0.100 | 0.124 | 0.149 | 0.174 | 0.199 | 0.224 | 0.250 |
| 025, 030 | 400 | Low | Dry | 602 | 578 | 552 | 533 | 510 | 486 | 464 | 434 | 406 | 368 | — |
| | | | Wet | 578 | 557 | 529 | 512 | 488 | 464 | 446 | 415 | 387 | 354 | — |
| | | High | Dry | 630 | 609 | 580 | 561 | 533 | 512 | 486 | 460 | 429 | 399 | 354 |
| | | | Wet | 606 | 588 | 559 | 540 | 512 | 491 | 467 | 441 | 411 | 385 | 342 |
| 035 | | Low | Dry | — | — | 680 | 661 | 635 | 609 | 578 | 538 | 491 | 439 | — |
| | | | Wet | — | — | 661 | 644 | 609 | 585 | 559 | 514 | 407 | 420 | — |
| | | High | Dry | — | — | 708 | 689 | 665 | 634 | 599 | 564 | 507 | 439 | — |
| | | | Wet | — | — | 691 | 675 | 644 | 613 | 580 | 540 | 481 | 420 | — |
| 040 | | Low | Dry | 729 | 715 | 696 | 680 | 668 | 649 | 630 | 613 | 585 | 502 | 531 |
| | | | Wet | 722 | 701 | 680 | 668 | 656 | 637 | 618 | 602 | 578 | 557 | 529 |
| | | High | Dry | 788 | 774 | 755 | 734 | 717 | 694 | 675 | 654 | 630 | 602 | 569 |
| | | | Wet | 774 | 757 | 741 | 720 | 708 | 684 | 665 | 644 | 621 | 597 | 564 |
| 050 | | Low | Dry | 873 | 854 | 835 | 814 | 795 | 774 | 755 | 724 | 698 | 665 | 635 |
| | | | Wet | 859 | 838 | 816 | 800 | 779 | 760 | 734 | 708 | 679 | 654 | 623 |
| | | High | Dry | 925 | 904 | 890 | 864 | 840 | 814 | 781 | 755 | 727 | 694 | 667 |
| | | | Wet | 894 | 887 | 873 | 847 | 823 | 798 | 764 | 738 | 713 | 682 | 649 |
| 060 | | Low | Dry | 1051 | 1019 | 1000 | 976 | 948 | 919 | 891 | 858 | 825 | — | — |
| | | | Wet | 1011 | 993 | 971 | 943 | 915 | 886 | 858 | 825 | 797 | — | — |
| | | High | Dry | 1075 | 1061 | 1047 | 1028 | 1009 | 990 | 971 | 955 | 934 | 915 | 896 |
| | | | Wet | 1061 | 1047 | 1033 | 1014 | 997 | 976 | 957 | 943 | 927 | 903 | 886 |

### ENGLISH (Cfm)

| MODEL 559G | UNIT VOLTAGE | BLOWER MOTOR SPEED | COIL | EXTERNAL STATIC PRESSURE (in. w.c.) | | | | | | | | | | |
|---|---|---|---|---|---|---|---|---|---|---|---|---|---|---|
| | | | | 0.0 | 0.1 | 0.2 | 0.3 | 0.4 | 0.5 | 0.6 | 0.7 | 0.8 | 0.9 | 1.0 |
| 025, 030 | 400 | Low | Dry | 1275 | 1225 | 1170 | 1130 | 1080 | 1030 | 985 | 920 | 860 | 780 | 660 |
| | | | Wet | 1225 | 1180 | 1120 | 1085 | 1035 | 985 | 945 | 880 | 820 | 750 | 645 |
| | | High | Dry | 1335 | 1290 | 1230 | 1190 | 1130 | 1085 | 1030 | 975 | 910 | 845 | 750 |
| | | | Wet | 1285 | 1245 | 1185 | 1145 | 1085 | 1040 | 990 | 935 | 870 | 815 | 725 |
| 035 | | Low | Dry | — | — | 1440 | 1400 | 1345 | 1290 | 1225 | 1140 | 1040 | 930 | — |
| | | | Wet | — | — | 1400 | 1365 | 1290 | 1240 | 1185 | 1090 | 990 | 890 | — |
| | | High | Dry | — | — | 1500 | 1460 | 1410 | 1345 | 1270 | 1195 | 1075 | 930 | — |
| | | | Wet | — | — | 1465 | 1430 | 1365 | 1300 | 1230 | 1145 | 1020 | 890 | — |
| 040 | | Low | Dry | 1545 | 1515 | 1475 | 1440 | 1415 | 1375 | 1335 | 1300 | 1240 | 1190 | 1125 |
| | | High | Wet | 1530 | 1485 | 1440 | 1415 | 1390 | 1350 | 1310 | 1275 | 1225 | 1180 | 1120 |
| | | High | Dry | 1670 | 1640 | 1600 | 1555 | 1520 | 1470 | 1430 | 1385 | 1335 | 1275 | 1205 |
| | | | Wet | 1640 | 1605 | 1570 | 1525 | 1500 | 1450 | 1410 | 1365 | 1315 | 1265 | 1195 |
| 050 | | Low | Dry | 1850 | 1810 | 1770 | 1725 | 1685 | 1640 | 1600 | 1535 | 1480 | 1410 | 1345 |
| | | | Wet | 1820 | 1775 | 1730 | 1695 | 1650 | 1610 | 1555 | 1500 | 1440 | 1385 | 1320 |
| | | High | Dry | 1960 | 1915 | 1885 | 1830 | 1780 | 1725 | 1655 | 1600 | 1540 | 1470 | 1400 |
| | | | Wet | 1895 | 1880 | 1850 | 1795 | 1745 | 1690 | 1620 | 1565 | 1510 | 1445 | 1375 |
| 060 | | Low | Dry | 2230 | 2160 | 2120 | 2070 | 2010 | 1950 | 1890 | 1820 | 1750 | — | — |
| | | | Wet | 2145 | 2105 | 2060 | 2000 | 1940 | 1880 | 1820 | 1750 | 1690 | — | — |
| | | High | Dry | 2280 | 2250 | 2220 | 2180 | 2140 | 2100 | 2060 | 2025 | 1980 | 1940 | 1900 |
| | | | Wet | 2250 | 2220 | 2190 | 2150 | 2115 | 2070 | 2030 | 2000 | 1965 | 1915 | 1880 |

NOTES:

1. Air delivery values are based on 400-volt unit operating voltage without air filter or optional electric heaters. Deduct field-supplied air filter and electric heater pressure drop to obtain external static pressure available for ducting.
2. Dashes indicate portions of table that are beyond blower motor capability.
3. Do not operate unit at a cooling airflow less than 165 L/s (350 cu ft) per minute for each 3.5 kW (12,000 Btuh) of rated cooling capacity. Indoor coil icing may occur at airflows below this point.

anticipator settings for room thermostat according to separate accessory electric heater Installation Instructions.

**To Start Unit**—Adjust the thermostat as follows:

1. Set selector switch at OFF.
2. Set fan switch as desired (FAN) (AUTO).
3. Turn on main disconnect switch(es) to unit.
4. Set thermostat dial to the desired temperature.
5. Set selector switch at COOL. Check system refrigerant charge as described under Service.

**Return Air Filter (Field supplied)**—Replace disposable filter 4 times a year, clean permanent filter a minimum of 4 times yearly or as required. Flush permanent filter with hot water, steam or soak in mild solution of soap or detergent and water. Allow filters to dry and replace. Refer to filter manufacturer's instructions, as required, for other types of filters.

## SERVICE

**WARNING:** Before installing or servicing unit, turn off main power to system. There may be more than one disconnect switch. Turn off accessory heater power if applicable. Electrical shock can cause personal injury.

**Unit Controls and Safety Devices**—The following controls are used on all units:

HIGH-PRESSURE RELIEF VALVE (Safety Control) is located in compressor. Relief valve opens at a pressure differential of approximately 3103 kPa (450 psi) between suction (low side) and discharge (high side) to allow pressure equalization.

INTERNAL CURRENT AND TEMPERATURE SENSITIVE OVERLOAD (Safety Control) resets automatically when internal compressor motor temperature drops to a safe level. When an internal overload is suspected of being open, check by using an ohmmeter or continuity tester.

### Refrigerant Charging

**WARNING:** Avoid contact with hot gas discharge line to prevent a burn when working on compressor.

**WARNING:** To prevent personal injury, wear safety glasses and gloves when handling refrigerant.

**CAUTION:** Do not overcharge system. An overcharge can cause compressor damage.

Unit refrigerant system is factory charged. When recharging is necessary, weigh in total charge indicated in Table IV. Remove any refrigerant remaining in system before recharging. If system has lost complete charge, evacuate system to 5000 microns (7398 kPa [29.7 in.] vacuum) before recharging. Schrader fitting connections are provided on unit suction and discharge lines for evacuation and charging. (See Figure 8 for Schrader fitting location.) Dial-a-charge charging cylinder is an accurate device used to recharge systems by weight. These cylinders are available at refrigeration supply firms.

CHECKING AND ADJUSTING REFRIGERANT CHARGE—Refrigerant system is fully charged with R-22 refrigerant, tested, and factory-sealed. For most applications, factory charge is the correct amount for best performance, however, this charge may require a slight adjustment to attain rated performance.

**NOTE:** Adjustment of refrigerant charge is not required unless unit is suspected of not having proper R-22 charge.

**CAUTION:** When evaluating the refrigerant charge, an indicated adjustment to specified factory charge must always be very minimal. If a substantial adjustment is indicated, an abnormal condition exists somewhere in cooling system, such as insufficient airflow across either or both coils.

An accurate superheat-, thermocouple-, or thermistor-type thermometer, a sling psychrometer, and a gage manifold are required when using superheat charging method for evaluating unit charge. *Do not use mercury or small dial-type thermometers. They are not adequate for this type of measurement.*

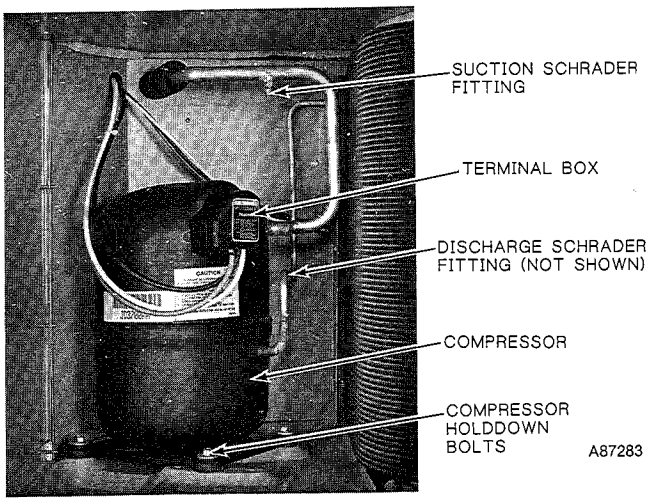


**Figure 8—Compressor Section**

**TABLE IV—SERVICE DATA**

| MODEL 559G | 025 | 030 | 035 | 040 | 050 | 060 |
|---|---|---|---|---|---|---|
| R-22 CHARGE*, Kg (lb) | 2.22 (4.9) | 2.40 (5.3) | 2.49 (5.5) | 2.77 (6.1) | 3.63 (8.0) | 3.63 (8.0) |
| INDOOR FAN | Centrifugal—Direct Drive—3 Speed | | | | | |
| R/s (Cfm) | 15.4 (925) | 14 (840) | 15.4 (925) | | | 16.2 (975) |
| Diameter, mm (in.) | 254 (10) | | 305 (12) | | | |
| Width, mm (in.) | | | 152 (6) | | | |
| Range, L/s (Cfm) | 330-425 (700-900) | 413-531 (875-1125) | 496-637 (1050-1350) | 578-743 (1225-1575) | 661-849 (1400-1800) | 826-1061 (1750-2250) |
| Motor, Watts (Hp) | 373 (1/2) | 246(1/3) | 373 (1/2) | | | 560 (3/4) |
| OUTDOOR FAN | Propeller—Direct Drive | | | | | |
| L/s (Cfm) | 1033 (2200) | 1133 (2400) | 1510 (3200) | | | 1651 (3500) |
| R/s (Rpm) | 14 (840) | | 17.5 (1050) | | | |
| Diameter, mm (in.) | | | 508 (20) | | | |
| Motor, Watts (Hp) | 149 (1/5) | 149 (1/5) | 187 (1/4) | | | 373 (1/2) |

*Factory refrigerant charge.

Proceed as Follows:

1. Remove caps from low- and high-pressure service fittings.
2. Using hoses with valve core depressors, attach low-and high-pressure gage hoses to low- and high-pressure service fittings, respectively.
3. Start unit in cooling mode. Let unit run until system pressures stabilize.
4. Measure and record following:
   a. Outdoor ambient air dry-bulb temperature C (F).
   b. Evaporator inlet air wet-bulb temperature C (F).
   c. Suction tube temperature C (F) at low side service fitting.
   d. Suction (low side) pressure kPa (psig).
5. Using Superheat Charging Table (see Table V), compare outdoor air dry-bulb temperature C (F) with evaporator inlet air wet-bulb temperature C (F) to determine desired system operating superheat temperature.
6. Using Required Suction Tube Temperature table (see Table 6), compare desired superheat temperature C (F) with suction (low side) operating pressure kPa (psig) to determine proper suction tube temperature.
7. Compare actual suction tube temperature with proper suction tube temperature. Using a tolerance of ± 2C (± 3F) add refrigerant if actual temperature is more than 2C (3F) higher than proper suction tube temperature, or remove refrigerant if actual temperature is more than 2C (3F) lower than required suction tube temperature.

**Metering Device Servicing**—See Figure 9 for metering device components. The piston has a refrigerant metering orifice through it. The retainer forms a sealing surface for liquid line flare connection. To check, clean or replace piston:

1. Shut off power to unit.
2. Remove refrigerant from unit using approved refrigerant removal methods.
3. Remove liquid line flare connections from metering device.
4. Note position of arrow on metering device body with respect to unit.
5. Pull retainer out of body. Be careful not to scratch flare sealing surface. If retainer does not pull out easily, carefully use locking pliers to remove retainer. Replace scratched or damaged retainer.

## TABLE V—SUPERHEAT CHARGING TABLE
## (Superheat Entering Suction Service Valve)

### SI (C)

| OUTDOOR TEMP (C) | INDOOR COIL ENTERING AIR TEMP (C WB) | | | | | | | | | | | | | |
|---|---|---|---|---|---|---|---|---|---|---|---|---|---|---|
| | 10 | 11 | 12 | 13 | 14 | 15 | 16 | 17 | 18 | 20 | 21 | 22 | 23 | 24 |
| 13 | -13 | -11 | -10 | - 8 | - 6 | - 5 | - 3 | - 1 | 0 | 2 | 3 | 4 | 5 | 7 |
| 16 | -14 | -12 | -11 | - 9 | - 7 | - 6 | - 4 | - 3 | - 1 | 1 | 2 | 3 | 4 | 6 |
| 18 | — | -14 | -12 | - 7 | - 9 | - 7 | - 6 | - 4 | - 3 | - 1 | - 1 | 2 | 3 | 5 |
| 21 | — | — | -14 | -12 | -10 | - 9 | - 7 | - 6 | - 4 | - 3 | - 1 | 1 | 2 | 4 |
| 24 | — | — | — | -14 | -13 | -11 | - 9 | - 7 | - 6 | - 4 | - 2 | 0 | 1 | 3 |
| 27 | — | — | — | — | -14 | -12 | -11 | - 9 | - 7 | - 6 | - 3 | - 2 | 2 | 0 |
| 29 | — | — | — | — | — | — | -12 | -11 | - 9 | - 8 | - 5 | - 3 | - 1 | 1 |
| 32 | — | — | — | — | — | — | -14 | -12 | -11 | - 9 | - 6 | - 4 | - 2 | 0 |
| 35 | — | — | — | — | — | — | — | -14 | -12 | -10 | - 7 | - 5 | - 3 | - 1 |
| 38 | — | — | — | — | — | — | — | — | -14 | -11 | - 9 | - 6 | - 4 | - 2 |
| 41 | — | — | — | — | — | — | — | — | -15 | -13 | -10 | - 8 | - 5 | - 3 |
| 43 | — | — | — | — | — | — | — | — | — | -14 | -11 | - 9 | - 6 | - 4 |
| 46 | — | — | — | — | — | — | — | — | — | — | -13 | -10 | - 8 | - 5 |

### ENGLISH (F)

| OUTDOOR TEMP (F) | INDOOR COIL ENTERING AIR TEMP (F WB) | | | | | | | | | | | | | |
|---|---|---|---|---|---|---|---|---|---|---|---|---|---|---|
| | 50 | 52 | 54 | 56 | 58 | 60 | 62 | 64 | 66 | 68 | 70 | 72 | 74 | 76 |
| 55 | 9 | 12 | 14 | 17 | 20 | 23 | 26 | 29 | 32 | 35 | 37 | 40 | 42 | 45 |
| 60 | 7 | 10 | 12 | 15 | 18 | 21 | 24 | 27 | 30 | 33 | 35 | 38 | 40 | 43 |
| 65 | — | 6 | 10 | 13 | 16 | 19 | 21 | 24 | 27 | 30 | 33 | 36 | 38 | 41 |
| 70 | — | — | 7 | 10 | 13 | 16 | 19 | 21 | 24 | 27 | 30 | 33 | 36 | 39 |
| 75 | — | — | — | 6 | 9 | 12 | 15 | 18 | 21 | 24 | 28 | 31 | 34 | 37 |
| 80 | — | — | — | — | 5 | 8 | 12 | 15 | 18 | 21 | 25 | 28 | 31 | 35 |
| 85 | — | — | — | — | — | — | 8 | 11 | 15 | 19 | 22 | 26 | 30 | 33 |
| 90 | — | — | — | — | — | — | 5 | 9 | 13 | 16 | 20 | 24 | 27 | 31 |
| 95 | — | — | — | — | — | — | — | 6 | 10 | 14 | 18 | 22 | 25 | 29 |
| 100 | — | — | — | — | — | — | — | — | 8 | 12 | 15 | 20 | 23 | 27 |
| 105 | — | — | — | — | — | — | — | — | 5 | 9 | 13 | 17 | 22 | 26 |
| 110 | — | — | — | — | — | — | — | — | — | 6 | 11 | 15 | 20 | 25 |
| 115 | — | — | — | — | — | — | — | — | — | — | 8 | 14 | 18 | 23 |

—Do not attempt to charge system under these conditions or refrigerant slugging may occur.

## TABLE VI—REQUIRED SUCTION-TUBE TEMPERATURE (Entering Suction Service Valve)

### SI (C)

| SUPERHEAT TEMP (C) | SUCTION PRESSURE AT SERVICE PORT (kPa) | | | | | | | | |
|---|---|---|---|---|---|---|---|---|---|
| | 424 | 443 | 463 | 483 | 503 | 524 | 546 | 568 | 591 |
| -17 | 2 | 3 | 4 | 5 | 6 | 7 | 8 | 9 | 10 |
| -16 | 3 | 4 | 5 | 6 | 7 | 8 | 9 | 10 | 11 |
| -15 | 4 | 5 | 6 | 7 | 8 | 9 | 10 | 11 | 12 |
| -14 | 5 | 6 | 7 | 8 | 9 | 10 | 11 | 12 | 13 |
| -13 | 6 | 7 | 8 | 9 | 10 | 11 | 12 | 13 | 15 |
| -12 | 7 | 8 | 9 | 10 | 11 | 12 | 13 | 15 | 16 |
| -11 | 8 | 9 | 10 | 11 | 12 | 13 | 15 | 16 | 17 |
| -10 | 9 | 10 | 11 | 12 | 13 | 15 | 16 | 17 | 18 |
| - 9 | 10 | 11 | 12 | 13 | 15 | 16 | 17 | 18 | 19 |
| - 8 | 11 | 12 | 13 | 15 | 16 | 17 | 18 | 19 | 20 |
| - 7 | 12 | 13 | 15 | 16 | 17 | 18 | 19 | 20 | 21 |
| - 6 | 13 | 15 | 16 | 17 | 18 | 19 | 20 | 21 | 22 |
| - 4 | 15 | 16 | 17 | 18 | 19 | 20 | 21 | 22 | 23 |
| - 3 | 16 | 17 | 18 | 19 | 20 | 21 | 22 | 23 | 25 |
| - 2 | 17 | 18 | 19 | 20 | 21 | 22 | 23 | 25 | 26 |
| - 1 | 18 | 19 | 20 | 21 | 22 | 23 | 25 | 26 | 27 |
| 0 | 19 | 20 | 21 | 22 | 23 | 25 | 26 | 27 | 28 |
| 1 | 20 | 21 | 22 | 23 | 25 | 26 | 27 | 28 | 29 |
| 2 | 21 | 22 | 23 | 25 | 26 | 27 | 28 | 29 | 30 |
| 3 | 22 | 23 | 25 | 26 | 27 | 28 | 29 | 30 | 31 |
| 4 | 23 | 25 | 26 | 27 | 28 | 29 | 30 | 31 | 32 |

### ENGLISH (F)

| SUPERHEAT TEMP (F) | SUCTION PRESSURE AT SERVICE PORT (Psig) | | | | | | | | |
|---|---|---|---|---|---|---|---|---|---|
| | 61.5 | 64.2 | 67.1 | 70.0 | 73.0 | 76.0 | 79.2 | 82.4 | 85.7 |
| 0 | 35 | 37 | 39 | 41 | 43 | 45 | 47 | 49 | 51 |
| 2 | 37 | 39 | 41 | 43 | 45 | 47 | 49 | 51 | 53 |
| 4 | 39 | 41 | 43 | 45 | 47 | 49 | 51 | 53 | 55 |
| 6 | 41 | 43 | 45 | 47 | 49 | 51 | 53 | 55 | 57 |
| 8 | 43 | 45 | 47 | 49 | 51 | 53 | 55 | 57 | 59 |
| 10 | 45 | 47 | 49 | 51 | 53 | 55 | 57 | 59 | 61 |
| 12 | 47 | 49 | 51 | 53 | 55 | 57 | 59 | 61 | 63 |
| 14 | 49 | 51 | 53 | 55 | 57 | 59 | 61 | 63 | 65 |
| 16 | 51 | 53 | 55 | 57 | 59 | 61 | 63 | 65 | 67 |
| 18 | 53 | 55 | 57 | 59 | 61 | 63 | 65 | 67 | 69 |
| 20 | 55 | 57 | 59 | 61 | 63 | 65 | 67 | 69 | 71 |
| 22 | 57 | 59 | 61 | 63 | 65 | 67 | 69 | 71 | 73 |
| 24 | 59 | 61 | 63 | 65 | 67 | 69 | 71 | 73 | 75 |
| 26 | 61 | 63 | 65 | 67 | 69 | 71 | 73 | 75 | 77 |
| 28 | 63 | 65 | 67 | 69 | 71 | 73 | 75 | 77 | 79 |
| 30 | 65 | 67 | 69 | 71 | 73 | 75 | 77 | 79 | 81 |
| 32 | 67 | 69 | 71 | 73 | 75 | 77 | 79 | 81 | 83 |
| 34 | 69 | 71 | 73 | 75 | 77 | 79 | 81 | 83 | 85 |
| 36 | 71 | 73 | 75 | 77 | 79 | 81 | 83 | 85 | 87 |
| 38 | 73 | 75 | 77 | 79 | 81 | 83 | 85 | 87 | 89 |
| 40 | 75 | 77 | 79 | 81 | 83 | 85 | 87 | 89 | 91 |

6. Slide piston out by inserting a small soft wire through metering hole (18-gage thermostat wire). See that metering hole, sealing surface around piston cones and fluted portion of piston are not damaged.
7. Chart on unit access panel illustrates proper arrangement and size of piston.
8. Clean piston refrigerant metering orifice.
9. Replace container O-ring before reassembling metering device. O-ring Part No. is 99CC501052.

LIQUID LINE STRAINER (to protect metering device), is made of wire mesh and located in the liquid line on inlet side. Strainer is pressed into the line. Remove strainer by threading a No. 10 sheet metal screw into strainer and pulling the screw with pliers.

**Compressor Removal**—See Table VII for compressor information and Figure 8 for component location. Follow safety codes, wear safety glasses and work gloves. Have quenching cloth available (step 8).

1. Shut off power to unit. Remove compressor access panel to expose compressor. See Figure 8.

**WARNING:** A failure to shut off power may result in electrical shock and personal injury.

2. Remove refrigerant from unit using approved refrigerant removal methods.
3. Remove core from suction and discharge line Schrader fittings.

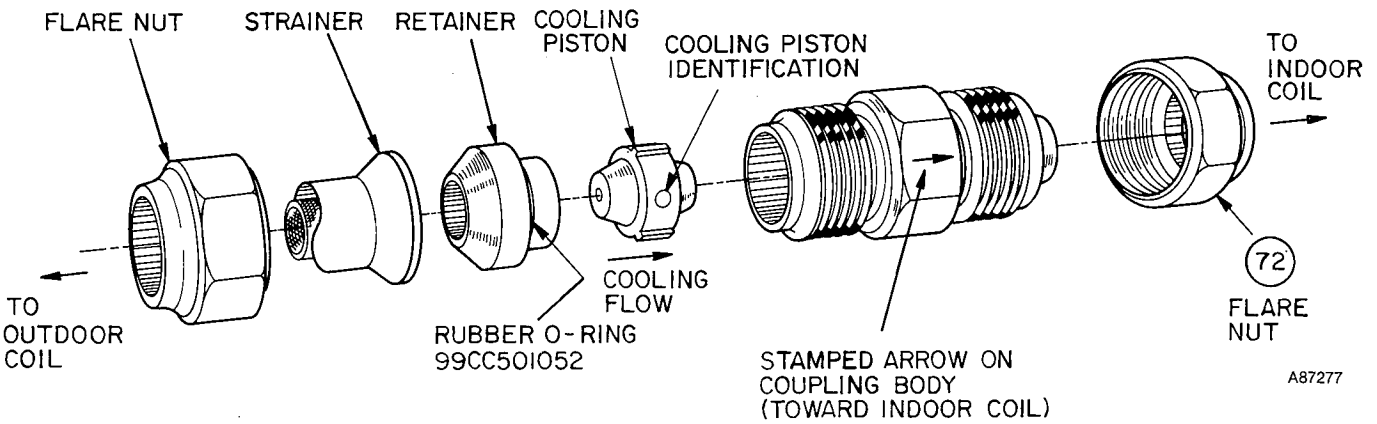


NOTE: Piston size is tabulated on unit access panel. Strainer is located in liquid line on upstream side of Check-Flo-Rater. Relative position of components is critical for correct operation.

**Figure 9—Metering Device Components**

4. Disconnect compressor wiring at compressor terminal box.
5. Using a tubing cutter, cut suction and discharge lines at convenient place near compressor for easy reassembly to new compressor with copper slip couplings.

**CAUTION:** Excessive movement of copper lines at compressor may cause a break where lines connect to other system components.

6. Remove accessory crankcase heater (if used) from compressor base.
7. Remove compressor holddown bolts and lift compressor out.
8. Carefully unbraze suction and discharge line piping stubs from compressor. If oil vapor in piping stubs ignites, use quenching cloth to extinguish.
9. Braze piping stubs (removed in step 8) on new compressor.
10. Install a new compressor in unit. Braze suction and discharge lines to compressor piping stubs (at points where cut, step 5) using field-supplied copper couplings. Ensure compressor holddown bolts are in place. Connect wiring.

    **NOTE:** Reinstall accessory crankcase heater (if used) on compressor base.
11. Clean system. Add new suction line filter drier as described below.

    **NOTE:** If a compressor failure was caused by motor winding burnout, the byproducts of the burnout must be separated from the circulating refrigerant. Burnout byproducts can cause future system operating problems if left in the system.

    With a mild burnout, clean the system by installing a liquid line filter drier. Run unit a minimum of 2 hours. Then change the filter drier and install accessory liquid line filter drier 50LQ900031.

    With a severe burnout, clean system by installing an oversized liquid line filter drier and a suction line filter mounted vertically. Run unit a minimum of one hour, then change both filters. Run unit again a minimum of 2 more hours. Then change the liquid line filter drier and install the accessory filter drier 50LQ900031. Remove and discard suction line filter.
12. Triple-evacuate and recharge unit. See Refrigerant Charging.

**Filter Drier**—Install accessory 50LQ900031, liquid line filter drier assembly, following instructions in accessory package.

### Lubrication

COMPRESSOR contains factory oil charge. Replace oil when lost. See Table VII for oil recharge. Use Texaco Capella WF-32 or Suniso 3GS oil.

FAN MOTOR BEARINGS are prelubricated for 3 years heavy duty or 5 years normal duty. Oiling holes are provided at each end of fan motor; remove fan motor and lubricate motor with 32 drops (16 drops per hole) of SAE 10 nondetergent oil at intervals described below:

a. Annually, when environment is very dirty, ambient temperature is higher than 41C (105°F) and average unit operating time exceeds 15 hours a day.
b. Every 3 years when environment is reasonably clean, ambient temperature is less than 41C (105°F) and unit operating time averages 8 to 15 hours a day.
c. Every 5 years when environment is clean, ambient temperature is less than 41C (105°F) and unit operating time averages less than 8 hours a day.

### Indoor Coil

**WARNING:** Before performing recommended maintenance, be sure main power switch to unit is turned off. Electrical shock can cause personal injury.

Lift or remove unit top cover for access to indoor coil. Inspect coil periodically. Clean as described under Outdoor Coil.

**Condensate Drain**—Clean condensate drain trap with bottle brush; then flush condensate pan beneath indoor coil with clean water. Ensure trap is primed before restarting unit. Ensure water flows freely through condensate drain.

**WARNING:** Before installing or servicing unit, turn off main power to system. There may be more than one disconnect switch. Turn off accessory heater power if applicable. Electrical shock can cause personal injury.

**Indoor Fan Assembly** (Figure 10)—Fan wheel should be centered in fan housing. To adjust fan, remove as follows:

### TABLE VII—COMPRESSOR DATA

| MODEL 559G | PRODUCTION COMPRESSOR* | OIL RECHARGE, kg (oz) |
|---|---|---|
| 025 | JD30 | 1.25 (44) |
| 030 | JD37 | 1.25 (44) |
| 035 | CRK3 | 1.45 (51) |
| 040 | AV5546E | 1.53 (54) |
| 050 | H23A563 | 1.33 (47) |
| 060 | PH77 | 1.86 (66) |

*Refer to compressor nameplate for complete model number.

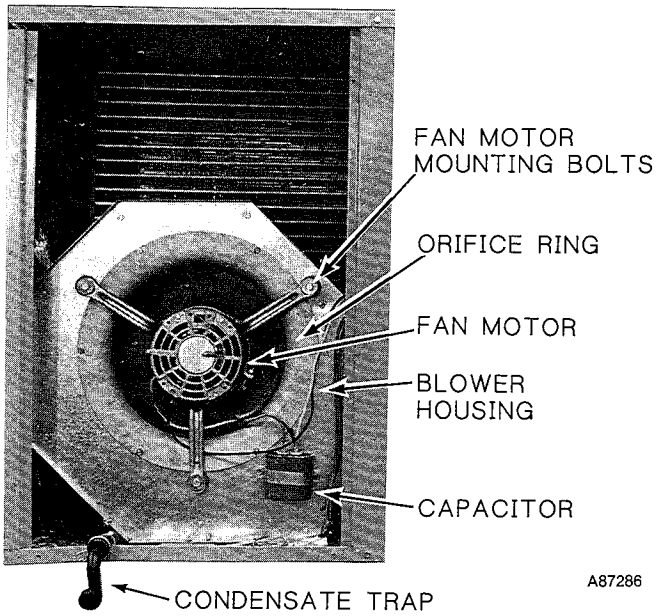


**Figure 10—Indoor Fan**

Disconnect fan motor wiring. Remove 6 sheet metal screws holding fan orifice in place. Remove 3 fan motor bracket mounting screws. Slide out complete fan, motor and orifice assembly.

Reassemble in reverse order.

To clean fan wheel and housing, use a brush, warm water and detergent. Do not splash water on motor.

**WARNING:** Before installing or servicing unit, turn off main power to system. There may be more than one disconnect switch. Turn off accessory heater power if applicable. Electrical shock can cause personal injury.

**Outdoor Air Fan**—Fan position is shown in Figure 11 and 12. Adjust fan by loosening setscrews and moving blades up or down. To remove outdoor air fan and motor: disconnect power, and remove screws holding discharge grille in place. Disconnect fan motor leads from the motor. Lift complete fan, motor and orifice assembly (Figure 13) out of unit. After replacing fan motor assembly, reconnect fan motor leads.

**Outdoor Coil**—Inspect outdoor coil regularly. A dirty coil can lead to premature compressor failure and higher operating costs. If cleaning is required, be sure power to system is shut off before attempting to clean coil.

Outdoor coil may be cleaned with brush, vacuum cleaner, or low-pressure water (weather permitting). Do not use industrial strength cleaning fluids for cleaning coils. If coil has 2 rows, make coil accessible by removing the top cover and wash out with garden hose.

**WARNING:** Be careful! Coil fins are sharp. Protect hands with gloves when cleaning or handling coil.

**Sequence of Operation** (Refer to Figure 14.)

COOLING—When power is supplied to unit, transformer (TRAN) is energized. If optional crankcase heater is used, heater is also energized.

With room thermostat set to call for cooling and indoor fan set in AUTO. position, sequence of operation is as follows:

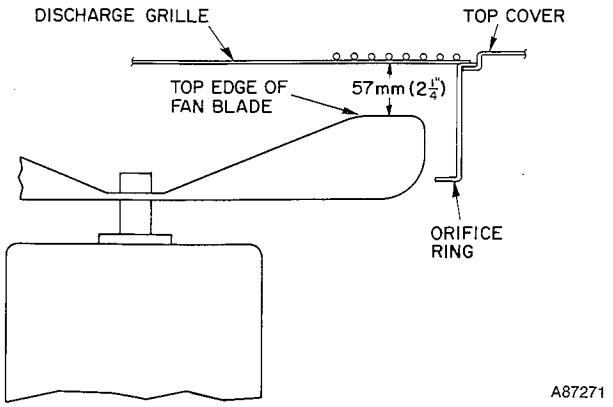


**Figure 11—Outdoor Fan Position**

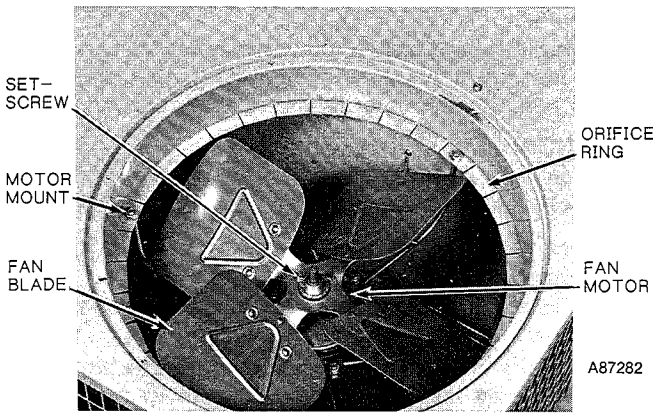


**Figure 12—Fan and Motor**

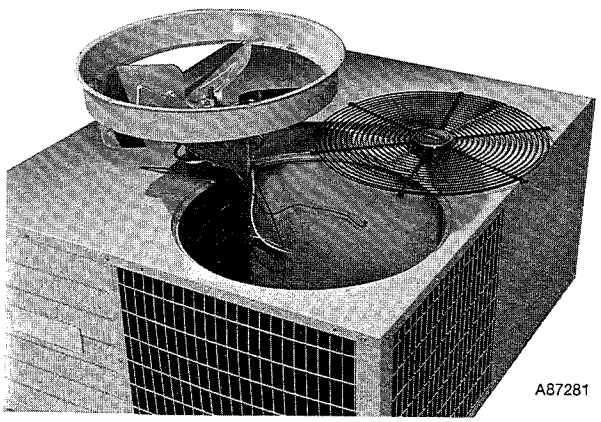


**Figure 13—Fan and Motor Removed**

On a call for cooling, thermostat makes circuits RY and RG. When room temperature rises, thermostat makes a circuit to R-Y to contactor (C) starting outdoor fan motor (OFM) and compressor (COMP). Circuit R-G is also made which energizes indoor fan relay (IFR), starting the indoor fan motor (IFM).

When thermostat is satisfied, contacts open, deenergizing contactor. Indoor fan relay, compressor and motors stop.

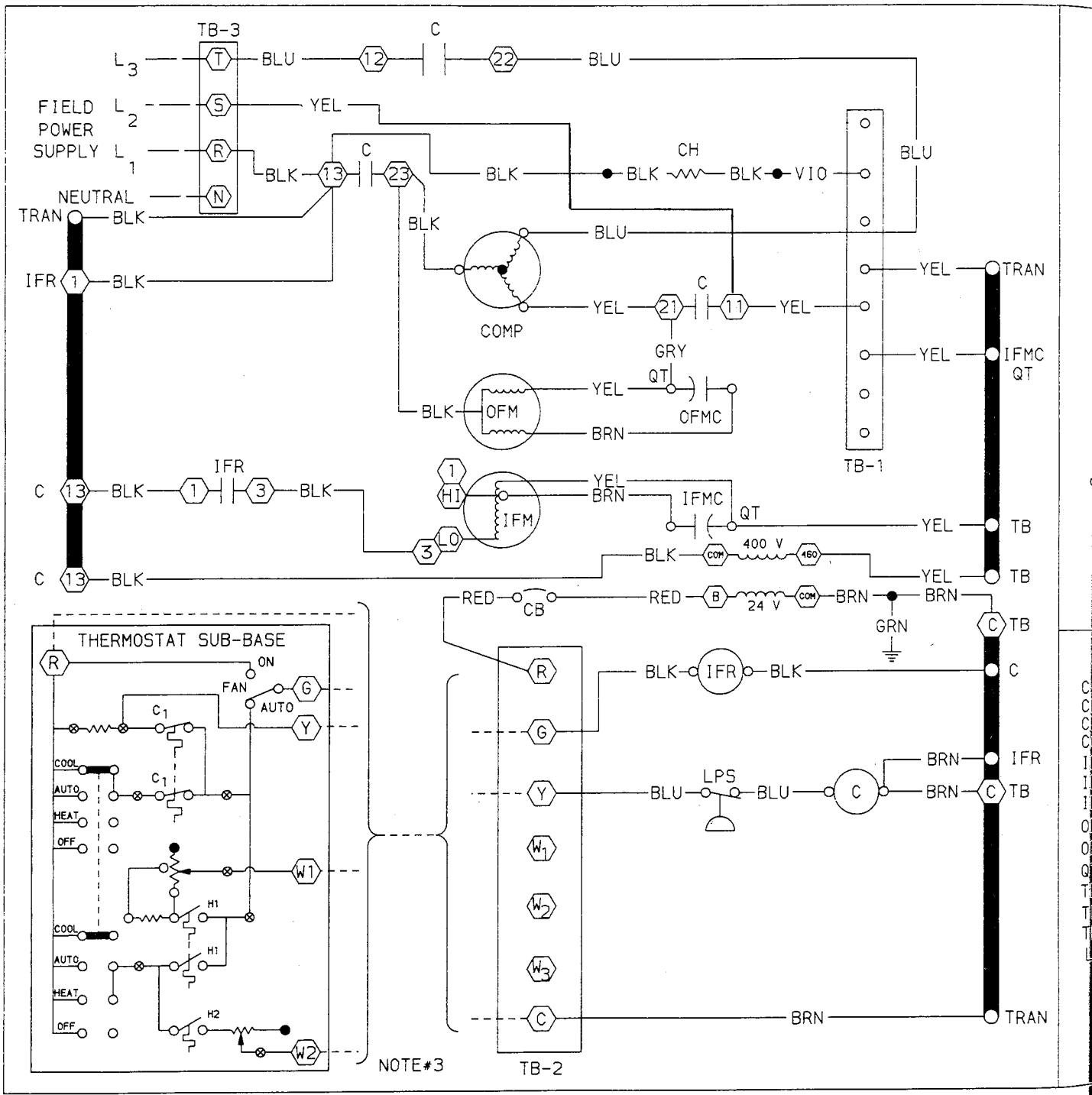


**Figure 14—Typical Wiring Diagram**

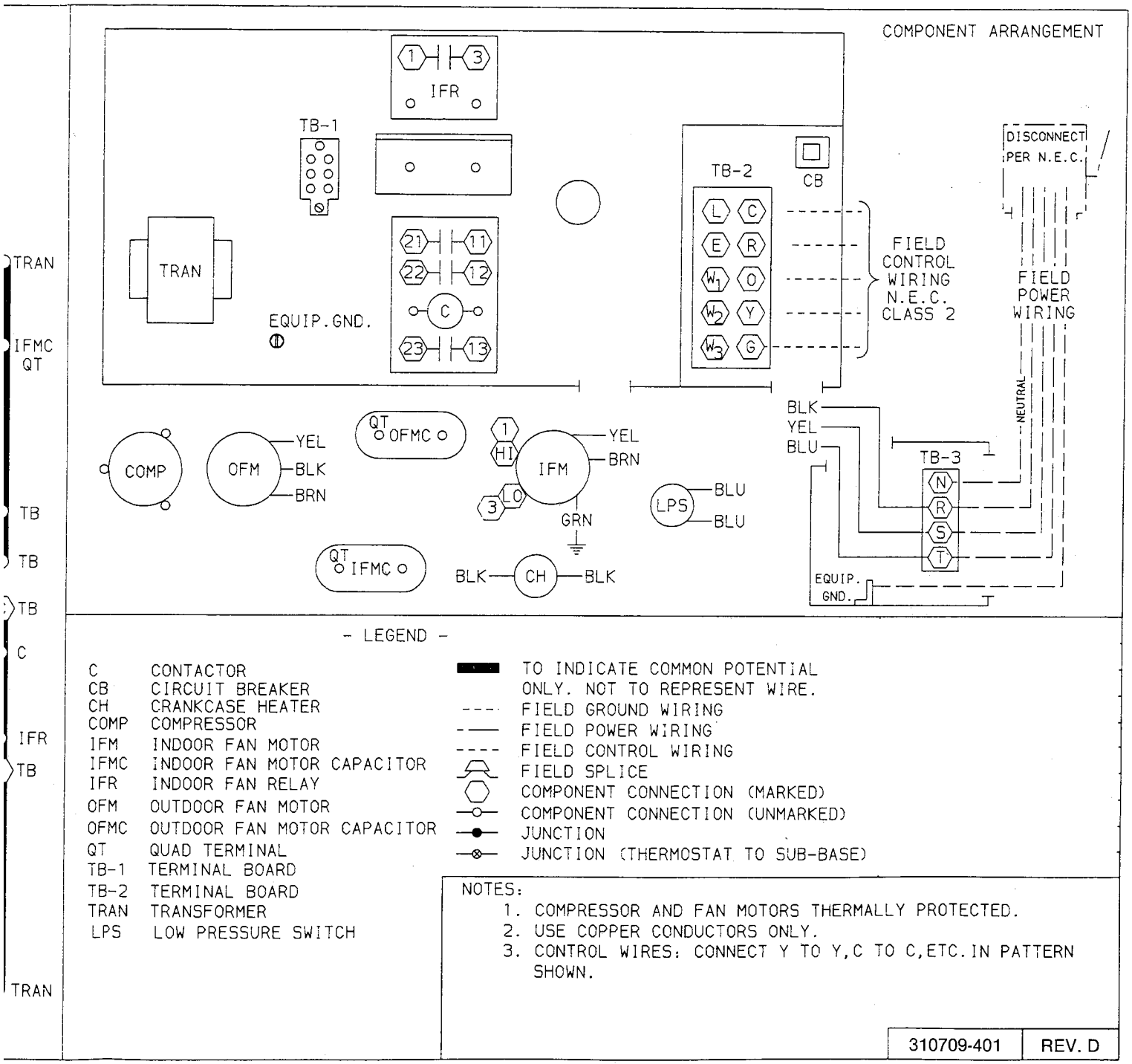


A87279

**Diagram (Model 559G030,040,050—50 Hz)**
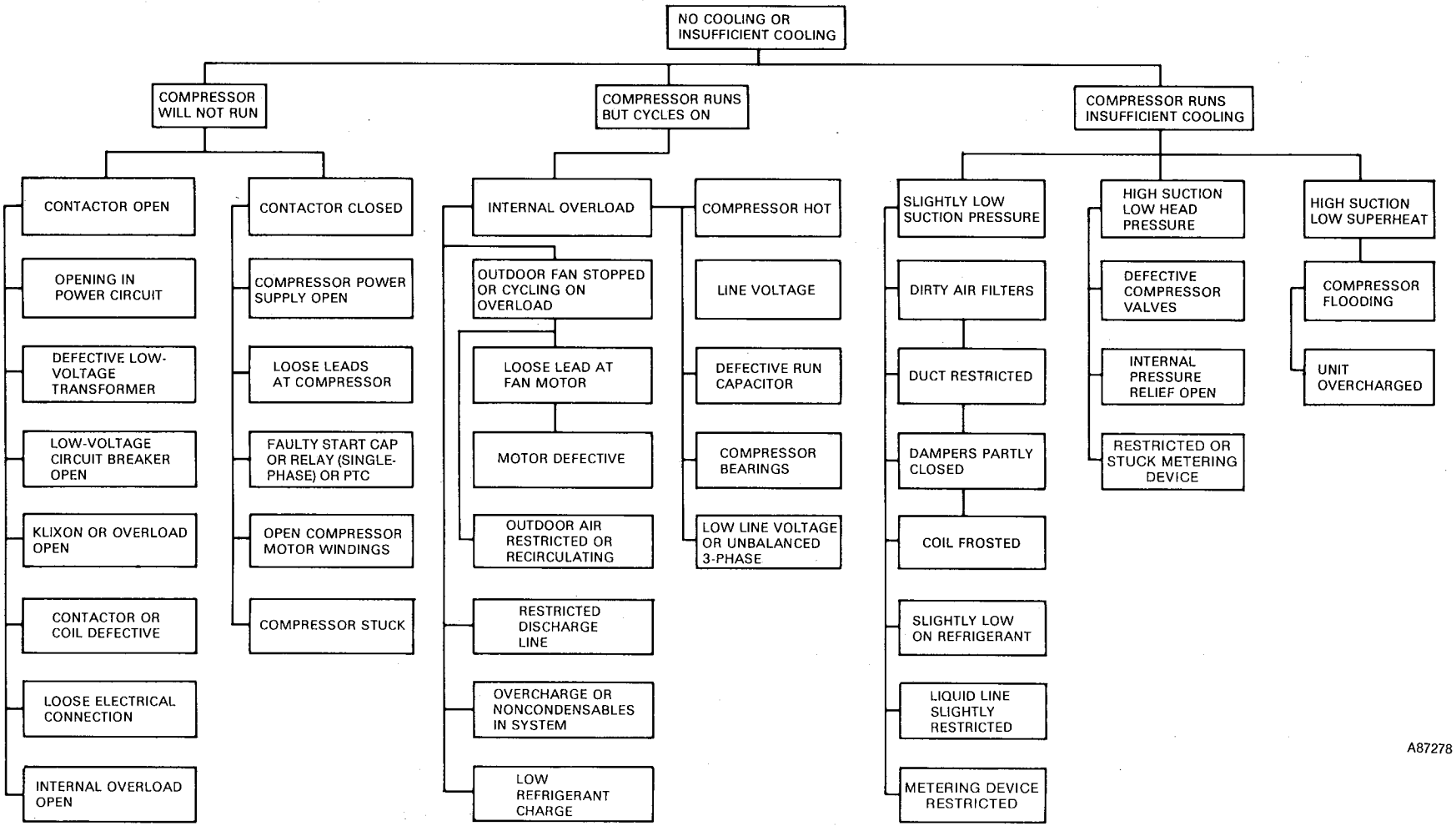
## TROUBLESHOOTING CHART