48VGUK
Performance™ 15.2+ SEER2 Ultra Low NOx 2-Stage Packaged Air Conditioner and Single Stage Gas Furnace System with Puron® (R-410A) Refrigerant Single and Three Phase 2-5 Nominal Tons (Sizes 24-60)

Carrier®

Turn to the experts

Installation Instructions

IMPORTANT: Effective January 1, 2015, all split system and packaged air conditioners must be installed pursuant to applicable regional efficiency standards issued by the Department of Energy.

NOTE: Read the entire instruction manual before starting the installation.

NOTE: Installer: Make sure the Owner's Manual and Service Instructions are left with the unit after installation.

Table of Contents

Table of Contents 1
Safety Considerations 1
Introduction. 2
Receiving and Installation 3
- Identify Unit 3
- Inspect Shipment. 3
- Roof Curb 3
- Slab Mount 3
- Inspection 4
- Rigging/Lifting of Unit (See Fig. 6). 4
- Configuring Units for Downflow (Vertical) Discharge 11
- High-Voltage Connections 13
- Special Procedures for 208-v Operation. 13
- Control Voltage Connections 13
- Standard Connection. 13
- Heat Anticipator Setting (Electro-Mechanical Thermostats only)14
- Transformer Protection. 14

Pre-Start-up. 14
Start-up 15
- Check Heating Control 15
- Check Gas Input 16
- Adjust Gas Input 16
- Normal Operation 22
- Airflow and Temperature Rise 22
- Heating Sequence of Operation (Ultra Low NOx Single and Three Phase Models). 22
- Limit Switches 22
- Burner Thermal Switch (Ultra Low NOx) 22
- Checking Cooling Control Operation. 22
- Checking and Adjusting Refrigerant Charge 23
- Indoor Airflow and Airflow Adjustments 23
- Cooling Sequence of Operation 24

Maintenance 35
- Air Filter 35
- Indoor Blower and Motor 35
- Induced Draft (combustion air) Blower Assembly. 35
- Flue Gas Passageways 36
- Limit Switch 36
- Burner Ignition 36
- Ultra Low NOx Burner Baffle Inspection/Cleaning (See Fig. 21.) 36
- Outdoor Coil, Indoor Coil, and Condensate Drain Pan 37
- Outdoor Fan 37
- Electrical Controls and Wiring. 37
- Refrigerant Circuit 38
- Gas Input. 38
- Evaporator Airflow. 38
- Puron (R-410A) Items 38
- Metering Device (Thermostatic Expansion Valve). 38
- Pressure Switches 38
- Loss of Charge Switch 38
- High-Pressure Switch 38
- Copeland Scroll Compressor (Puron [R-410A] Refrigerant). . 38
- Refrigerant System 39

Troubleshooting 39
Start-up Checklist 39

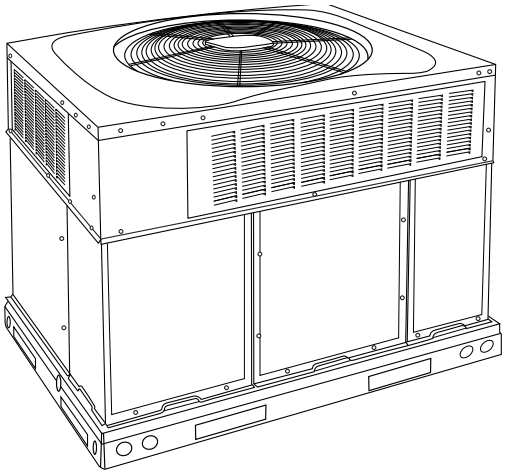

A09033

Fig. 1 – Unit 48VG Ultra Low NOx

Safety Considerations

Improper installation, adjustment, alteration, service maintenance, or use can cause explosion, fire, electrical shock, or other conditions which may cause death, personal injury, or property damage. Consult a qualified installer, service agency, or your distributor or branch for information or assistance. The qualified installer or agency must use factory-authorized kits or accessories when modifying this product. Refer to the individual instructions packaged with the kits or accessories when installing.

Follow all safety codes. Wear safety glasses, protective clothing, and work gloves. Have a fire extinguisher available. Read these instructions thoroughly and follow all warnings or cautions included in literature and attached to the unit. consult local building codes, the current editions of the National Fuel Gas Code (NFGC) NFPA 54/ANSI Z223.1, and the National Electrical Code (NEC) NFPA 70.

In Canada refer to the current editions of the National Standards of Canada CAN/CSA-B149.1 and .2 Natural Gas and Propane Installation codes, and Canadian Electrical Code CSA C22.1

Recognize safety information. This is the safety-alert symbol ⚠. When you see this symbol on the unit and in instructions or manuals, be alert to the potential for personal injury. Understand these signal words: DANGER, WARNING, and CAUTION. These words are used with the safety-alert symbol. DANGER identifies the most serious hazards which will result in severe personal injury or death. WARNING signifies hazards which could result in personal injury or death. CAUTION is used to identify unsafe practices which may result in minor personal injury or product and property damage. NOTE is used to highlight suggestions which will result in enhanced installation, reliability, or operation.

⚠ WARNING

CARBON MONOXIDE POISONING HAZARD

Failure to follow this warning could result in personal injury and/or death.

Carbon Monoxide (CO) is a colorless, odorless, and tasteless poisonous gas that can be fatal when inhaled. Follow all installation, maintenance, and service instructions. See additional information below regarding the installation of a CO Alarm.

Most states is the USA and jurisdictions in Canada have laws that require the use of Carbon Monoxide (CO) alarms with fuel burning products. Examples of fuel burning products are furnaces, boilers, space heaters, generators, water heaters, stoves/ranges, clothes dryers, fireplaces, incinerators, automobiles, and other internal combustion engines. Even if there are no laws in your jurisdiction requiring a CO Alarm, it's highly recommended that whenever any fuel burning product is used in or around the home or business that the dwelling be equipped with a CO Alarm(s). The Consumer Product Safety Commission recommends the use of CO Alarm(s). The CO Alarm(s) must be installed, operated, and maintained according to the CO Alarm manufacturer's instructions. For more information about Carbon Monoxide, local laws, or to purchase a CO Alarm only, please visit the following website https://www.kidde.com

⚠ WARNING

ELECTRICAL SHOCK HAZARD

Failure to follow this warning could result in personal injury or death.

Before installing or servicing system, always turn off main power to system and install lockout tag. There may be more than one disconnect switch. Turn off accessory heater power switch if applicable.

⚠ WARNING

PERSONAL INJURY AND ENVIRONMENTAL HAZARD

Failure to relieve system pressure could result in personal injury and/or death.

1. Relieve pressure and recover all refrigerant before servicing existing equipment, and before final unit disposal. Use all service ports and open all flow-control devices, including solenoid valves.
2. Federal regulations require that you do not vent refrigerant into the atmosphere. Recover during system repair or final unit disposal.

⚠ CAUTION

FIRE, EXPLOSION, ELECTRICAL SHOCK AND CARBON MONOXIDE POISONING HAZARD

Failure to follow this warning could result in personal injury or unit damage.

A qualified installer or agency must use only factory-authorized kits or accessories when modifying this product.

⚠ CAUTION

CUT HAZARD

Failure to follow this caution may result in personal injury.

When removing access panels (see Fig. 22) or performing maintenance functions inside your unit, be aware of sharp sheet metal parts and screws. Although special care is taken to reduce sharp edges to a minimum, be extremely careful and wear appropriate protective clothing, safety glasses and gloves when handling parts or reaching into the unit.

⚠ WARNING

PERSONAL INJURY AND PROPERTY DAMAGE HAZARD

For continued performance, reliability, and safety, the only approved accessories and replacement parts are those specified by the equipment manufacturer. The use of non-manufacturer approved parts and accessories could invalidate the equipment limited warranty and result in fire risk, equipment malfunction, and failure. Please review manufacturer's instructions and replacement part catalogs available from your equipment supplier.

Introduction

This unit (see Fig. 1) is a fully self-contained, combination Category I gas heating/electric cooling unit designed for outdoor installation (See Fig. 3 and Fig. 4 for unit dimensions). All unit sizes have return and discharge openings for both horizontal and downflow configurations, and are factory shipped with all downflow duct openings covered. Units may be installed either on a rooftop or on a cement slab. (See Fig. 5 for roof curb dimensions).

In gas heating mode, this unit is designed for a minimum continuous return-air temperature of 55°F (13°C) db and a maximum continuous return-air temperature of 80°F (27°C) db. Failure to follow these return-air temperature limits may affect reliability of heat exchangers, motors, and other components.

Models with a "U" in the fifth position of the model number are dedicated to the Ultra Low NOx emissions requirements of 14 nonograms/joule and must be installed in California Air Quality Management Districts or any other regions in North America where Ultra Low NOx rules exist.

⚠ NOTICE

If the unit gasketing or insulation must be replaced, ensure the material used is compliant with the two agency requirements listed.

1. Insulation and adhesives shall meet NFPA 90.1 requirements for flame spread and smoke generation.
2. Cabinet insulation shall meet ASHRAE Standard 62.2.

Receiving and Installation

Step 1 – Check Equipment

Identify Unit

The unit model number and serial number are stamped on the unit information plate. Check this information against shipping papers.

Inspect Shipment

Inspect for shipping damage before removing packaging materials. If unit appears to be damaged or is torn loose from its anchorage, have it examined by transportation inspectors before removal. Forward claim papers directly to transportation company. Manufacturer is not responsible for any damage incurred in transit. Check all items against shipping list. Immediately notify the nearest equipment distribution office if any item is missing. To prevent loss or damage, leave all parts in original packages until installation.

If the unit is to be mounted on a curb in a downflow application, review Step 9 to determine which method is to be used to remove the downflow panels before rigging and lifting into place. The panel removal process may require the unit to be on the ground.

Step 2 – Provide Unit Support

For hurricane tie downs, contact distributor for details and PE (Professional Engineering) Certificate if required.

Roof Curb

Install accessory roof curb in accordance with instructions shipped with curb (See Fig. 5). Install insulation, cant strips, roofing, and flashing. Ductwork must be attached to curb.

IMPORTANT: The gasketing of the unit to the roof curb is critical for a water tight seal. Install gasketing material supplied with the roof curb. Improperly applied gasketing also can result in air leaks and poor unit performance.

Curb should be level to within 1/4 in. (6 mm). This is necessary for unit drain to function properly. Refer to accessory roof curb installation instructions for additional information as required.

Installation on older “G” series roof curbs.

Two accessory kits are available to aid in installing a new “G” series unit on an old “G” roof curb.

1. Accessory kit number CPADCURB001A00, (small chassis) and accessory kit number CPADCURB002A00, (large chassis) includes roof curb adapter and gaskets for the perimeter seal and duct openings. No additional modifications to the curb are required when using this kit.
2. An alternative to the adapter curb is to modify the existing curb by removing the outer horizontal flange and use accessory kit number CPGSKTKIT001A00 which includes spacer blocks (for easy alignment to existing curb) and gaskets for the perimeter seal and duct openings. This kit is used when existing curb is modified by removing outer horizontal flange.

⚠ CAUTION

UNITS/STRUCTURAL DAMAGE HAZARD

Failure to follow this caution may result in property damage.

Ensure there is sufficient clearance for saw blade when cutting the outer horizontal flange of the roof curb so there is no damage to the roof or flashing.

Slab Mount

Place the unit on a solid, level pad that is at least 2 in. (51 mm) above grade. The pad should extend approximately 2 in. (51 mm) beyond the casing on all 4 sides of the unit. (See Fig. 2.) Do not secure the unit to the pad except when required by local codes.

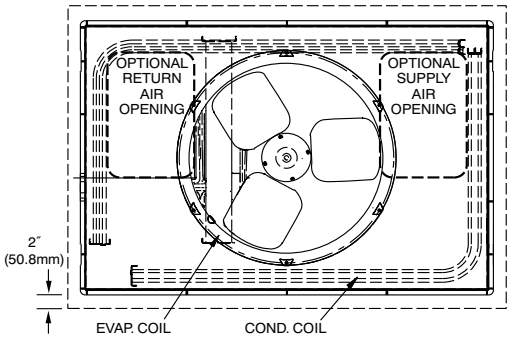

A07926

Fig. 2 – Slab Mounting Details

Step 3 – Field Fabricate Ductwork

Secure all ducts to roof curb and building structure on vertical discharge units. Do not connect ductwork to unit. For horizontal applications, unit is provided with flanges on the horizontal openings. All ductwork should be secured to the flanges. Insulate and weatherproof all external ductwork, joints, and roof openings with counter flashing and mastic in accordance with applicable codes.

Ducts passing through an unconditioned space must be insulated and covered with a vapor barrier.

If a plenum return is used on a vertical unit, the return should be ducted through the roof deck to comply with applicable fire codes.

Read unit rating plate for any required clearances around ductwork. Cabinet return-air static shall not exceed -.25 IN. W.C.

Step 4 – Provide Clearances

IMPORTANT: The unit must be secured to the curb by installing screws through the bottom of the curb flange and into the unit base rails. When installing large base units onto the common curb, the screws must be installed before allowing the full weight of the unit to rest on the curb. A minimum of six screws are required for large base units. Failure to secure unit properly could result in an unstable unit. See Warning near Rigging/Lifting information and accessory curb instructions for more details.

The required minimum operating and service clearances are shown in Fig. 3 and Fig. 4. Adequate combustion, ventilation and condenser air must be provided.

IMPORTANT: Do not restrict outdoor airflow. An air restriction at either the outdoor-air inlet or the fan discharge may be detrimental to compressor life.

The outdoor fan pulls air through the outdoor coil and discharges it through the top grille. Be sure that the fan discharge does not recirculate to the outdoor coil. Do not locate the unit in either a corner or under an overhead obstruction. The minimum clearance under a partial overhang (such as a normal house overhang) is 48-in. (1219 mm) above the unit top. The maximum horizontal extension of a partial overhang must not exceed 48-in. (1219 mm).

Do not place the unit where water, ice, or snow from an overhang or roof will damage or flood the unit. Do not install the unit on carpeting or other combustible materials. Slab-mounted units should be at least 2 in. (51 mm) above the highest expected water and runoff levels. Do not use unit if it has been under water.

Step 5 – Rig and Place Unit

⚠ WARNING

PERSONAL INJURY OR PROPERTY DAMAGE HAZARD

Failure to follow this warning could result in personal injury, death or property damage.

When installing the unit on a rooftop, be sure the roof will support the additional weight.

Rigging and handling of this equipment can be hazardous for many reasons due to the installation location (roofs, elevated structures, etc.).

Only trained, qualified crane operators and ground support staff should handle and install this equipment.

When working with this equipment, observe precautions in the literature, on tags, stickers, and labels attached to the equipment, and any other safety precautions that might apply.

Training for operators of the lifting equipment should include, but not be limited to, the following:

1. Application of the lifter to the load, and adjustment of the lifts to adapt to various sizes or kinds of loads.
2. Instruction in any special operation or precaution.
3. Condition of the load as it relates to operation of the lifting kit, such as balance, temperature, etc.

Follow all applicable safety codes. Wear safety shoes and work gloves.

Inspection

Prior to initial use, and at monthly intervals, all rigging shackles, clevis pins, and straps should be visually inspected for any damage, evidence of wear, structural deformation, or cracks. Particular attention should be paid to excessive wear at hoist hooking points and load support areas. Materials showing any kind of wear in these areas must not be used and should be discarded.

⚠ WARNING

UNIT FALLING HAZARD

Failure to follow this warning could result in personal injury or death.

Never stand beneath rigged units or lift over people.

⚠ WARNING

PROPERTY DAMAGE HAZARD

Failure to follow this warning could result in personal injury/death or property damage.

When straps are taut, the clevis should be a minimum of 36 in. (914 mm) above the unit top cover.

Rigging/Lifting of Unit (See Fig. 6)

⚠ WARNING

UNIT FALLING HAZARD

Failure to follow this warning could result in personal injury or death.

Large base units must be secured to common curb before allowing full weight of unit to rest on curb. Install screws through curb into unit base rails while rigging crane is still supporting unit.

Lifting holes are provided in base rails as shown in Fig. 3 and Fig. 4.

1. Leave top shipping skid on the unit for use as a spreader bar to prevent the rigging straps from damaging the unit. If the skid is not available, use a spreader bar of sufficient length to protect the unit from damage.
2. Attach shackles, clevis pins, and straps to the base rails of the unit. Be sure materials are rated to hold the weight of the unit (See Fig. 6).
3. Attach a clevis of sufficient strength in the middle of the straps. Adjust the clevis location to ensure unit is lifted level with the ground.

After the unit is placed on the roof curb or mounting pad, remove the top skid.

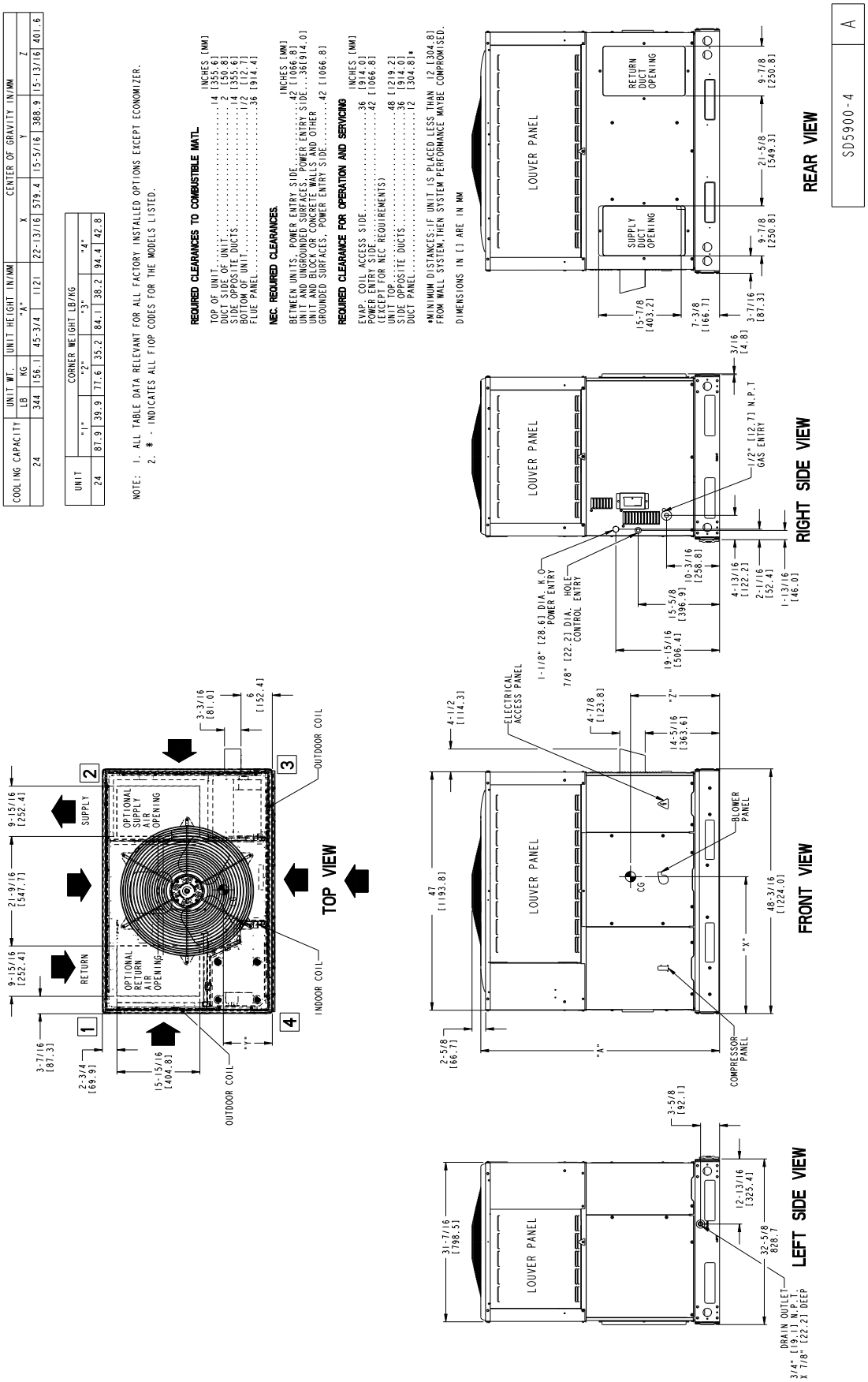

COOLING CAPACITY	UNIT WT.		UNIT HEIGHT IN/MM	CENTER OF GRAVITY IN/MM		
	LB	KG	"A"	X	Y	Z
24	344	156.1	1121	22-13/16 579.4	15-5/16 388.9	15-13/16 401.6

UNIT	CORNER WEIGHT LB/KG					
	"1"		"2"		"3"	"4"
24	87.9	39.9	77.6	35.2	84.1 38.2	94.4 42.8

NOTE: 1. ALL TABLE DATA RELEVANT FOR ALL FACTORY INSTALLED OPTIONS EXCEPT ECONOMIZER.
2. * - INDICATES ALL FIOP CODES FOR THE MODELS LISTED.

REQUIRED CLEARANCES TO COMBUSTIBLE MATL.

	INCHES [MM]
TOP OF UNIT	14 [355.6]
DUCT OF UNIT	2 [50.8]
SIDE OPPOSITE DUCTS	14 [355.6]
BOTTOM OF UNIT	1/2 [12.7]
FLUE PANEL	36 [914.4]

NEC. REQUIRED CLEARANCES.

	INCHES [MM]
BETWEEN UNITS, POWER ENTRY SIDE	42 [1066.8]
UNIT AND UNGROUNDED SURFACES, POWER ENTRY SIDE	36[914.0]
UNIT AND BLOCK OR CONCRETE WALLS AND OTHER GROUNDED SURFACES, POWER ENTRY SIDE	42 [1066.8]

REQUIRED CLEARANCE FOR OPERATION AND SERVICING

	INCHES [MM]
EVAP. COIL ACCESS SIDE	36 [914.0]
POWER ENTRY SIDE	42 [1066.8]
(EXCEPT FOR NEC REQUIREMENTS)	
UNIT TOP	48 [1219.2]
SIDE OPPOSITE DUCTS	36 [914.0]
DUCT PANEL	12 [304.8]*

*MINIMUM DISTANCES:IF UNIT IS PLACED LESS THAN 12 [304.8] FROM WALL SYSTEM,THEN SYSTEM PERFORMANCE MAYBE COMPROMISED.

DIMENSIONS IN [] ARE IN MM

A230027

Fig. 3 – 24-30 Unit Dimensions

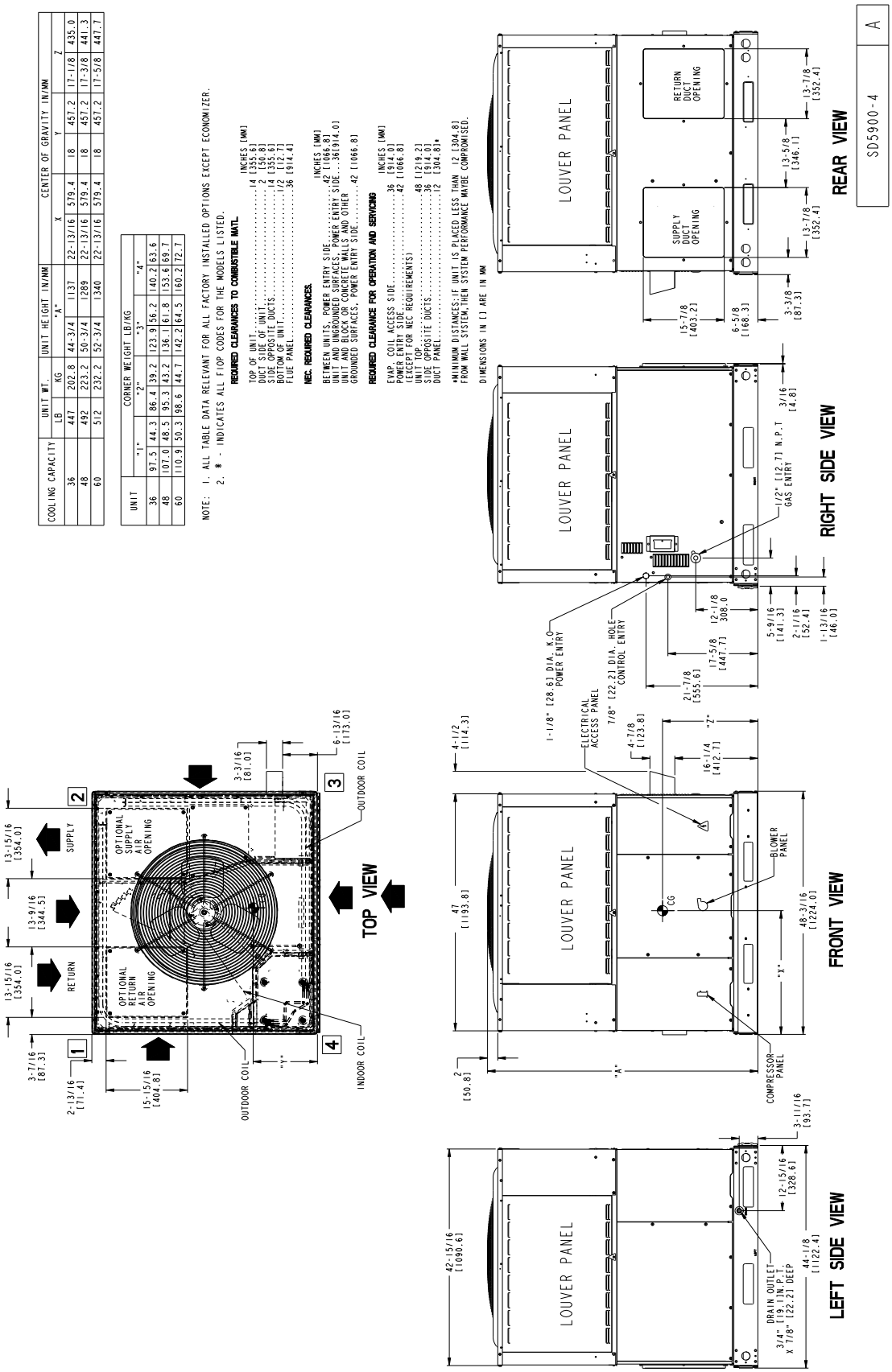

COOLING CAPACITY	UNIT WT.		UNIT HEIGHT IN/MM	CENTER OF GRAVITY IN/MM		
	LB	KG	"A"	X	Y	Z
36	447	202.8	44-3/4 1137	22-13/16 579.4	18 457.2	17-1/8 435.0
48	492	223.2	50-3/4 1289	22-13/16 579.4	18 457.2	17-3/8 441.3
60	512	232.2	52-3/4 1340	22-13/16 579.4	18 457.2	17-5/8 447.7

UNIT	CORNER WEIGHT LB/KG			
	"1"	"2"	"3"	"4"
36	97.5 44.3	86.4 39.2	123.9 56.2	140.2 63.6
48	107.0 48.5	95.3 43.2	136.1 61.8	153.6 69.7
60	110.9 50.3	98.6 44.7	142.2 64.5	160.2 72.7

NOTE: 1. ALL TABLE DATA RELEVANT FOR ALL FACTORY INSTALLED OPTIONS EXCEPT ECONOMIZER.
2. * - INDICATES ALL FIOP CODES FOR THE MODELS LISTED.

REQUIRED CLEARANCES TO COMBUSTIBLE MAT'L.

	INCHES [MM]
TOP OF UNIT	14 [355.6]
DUCT SIDE OF UNIT	14 [355.6]
SIDE OPPOSITE DUCTS	14 [355.6]
BOTTOM OF UNIT	1/2 [12.7]
FLUE PANEL	36 [914.4]

NEC. REQUIRED CLEARANCES.

	INCHES [MM]
BETWEEN UNITS, POWER ENTRY SIDE	42 [1066.8]
UNIT AND UNGROUNDED SURFACES, POWER ENTRY SIDE	36[914.0]
UNIT AND BLOCK OR CONCRETE WALLS AND OTHER GROUNDED SURFACES, POWER ENTRY SIDE	42 [1066.8]

REQUIRED CLEARANCE FOR OPERATION AND SERVICING

	INCHES [MM]
EVAP. COIL ACCESS SIDE	36 [914.0]
POWER ENTRY SIDE	42 [1066.8]
(EXCEPT FOR NEC REQUIREMENTS)	
UNIT TOP	48 [1219.2]
SIDE OPPOSITE DUCTS	36 [914.0]
DUCT PANEL	12 [304.8]*

*MINIMUM DISTANCES IF UNIT IS PLACED LESS THAN 12 [304.8] FROM WALL SYSTEM,THEN SYSTEM PERFORMANCE MAYBE COMPROMISED.

DIMENSIONS IN [] ARE IN MM

A230028

Fig. 4 – 36-60 Unit Dimensions

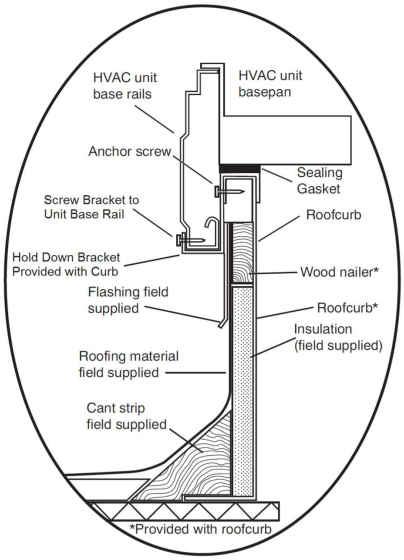

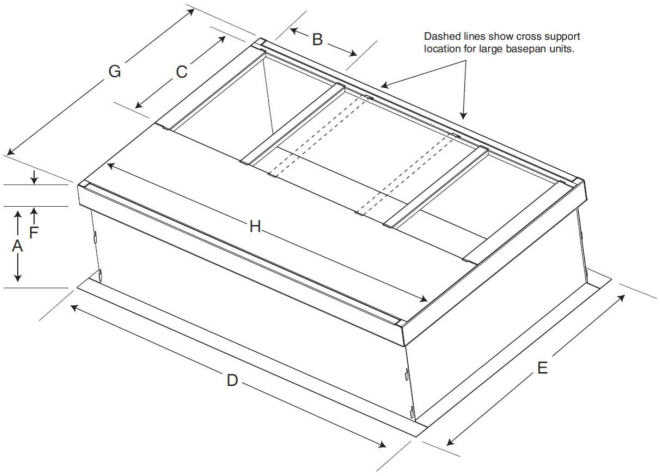

SMALL/COMMON CURB

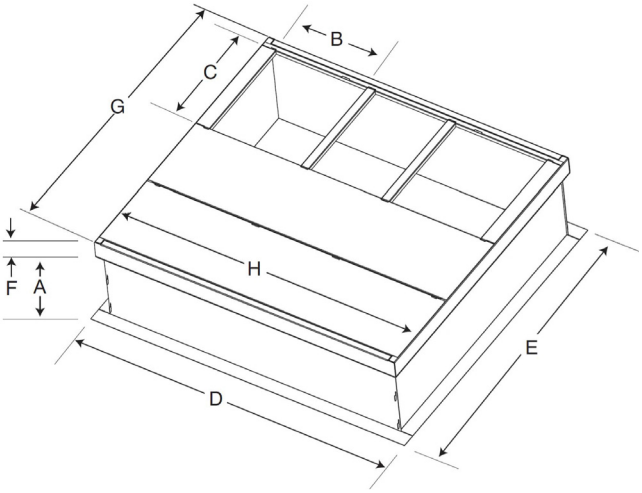

LARGE CURB

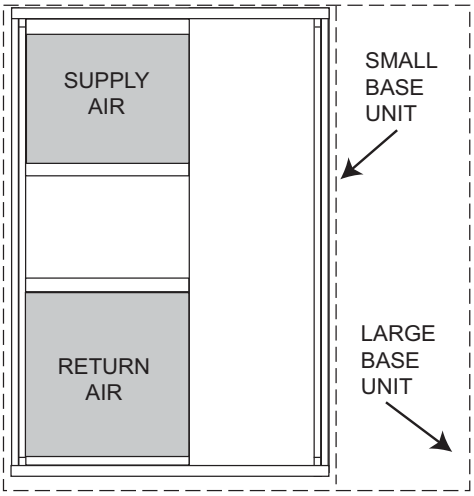

UNIT PLACEMENT ON COMMON CURB

SMALL OR LARGE BASE UNIT

A180216

UNIT SIZE	CATALOG NUMBER	A IN. (mm)	B (small / common base) IN. (mm)*	B (large base) IN. (mm)*	C IN. (mm)	D IN. (mm)	E IN. (mm)	F IN. (mm)	G IN. (mm)	H IN. (mm)
Small or Large	CPRFCURB011B00	14 (356)	10 (254)	14 (356)	16 (406)	47.8 (1214)	32.4 (822)	2.7 (69)	30.6 (778)	46.1 (1170)
Large	CPRFCURB013B00	14 (356)	14 (356)				43.9 (1116)		42.2 (1072)	

* Part Numbers CPRCURB011B00 can be used on both small and large basepan units. The cross supports must be located based on whether the unit is a small basepan or a large basepan.

NOTES:
1 . Roof curb must be set up for unit being installed.
2. Seal strip must be applied, as required, to unit being installed.
3. Roof curb is made of 16-gauge steel.
4. Attach ductwork to curb (flanges of duct rest on curb).
5. Insulated panels: 1-in. (25.4 mm) thick fiberglass 1 lb. density.

Fig. 5 – Roof Curb Dimensions

⚠ CAUTION - NOTICE TO RIGGERS
⚠ PRUDENCE - AVIS AUX MANIPULATEUR

ACCESS PANELS MUST BE IN PLACE WHEN RIGGING.
PANNEAUX D'ACCES DOIT ÊTRE EN PLACE POUR MANIPULATION.

Use top skid as spreader bar. / Utiliser la palette du haut comme barre de répartition

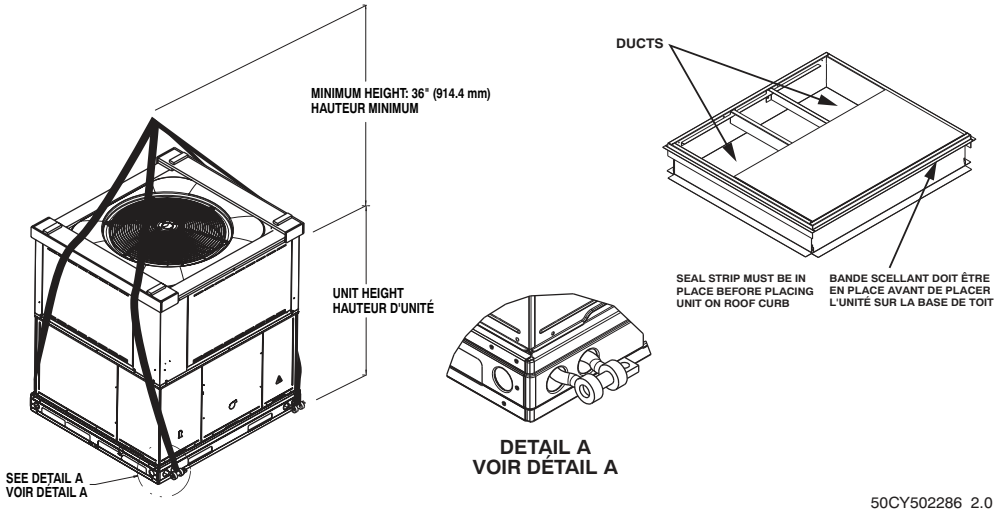

A09051

Standard Copper Tube Aluminum Fin

SMALL CABINET				LARGE CABINET						
Unit	24			Unit	36		48		60	
	lb	kg			lb	kg	lb	kg	lb	kg
Rigging Weight	352	160		Rigging Weight	455	206	500	227	520	236

NOTE: See dimensional drawing for corner weights.

Fig. 6 – Suggested Rigging

Table 1 – Physical Data

UNIT SIZE	24040	24060	36060	48090	60090
NOMINAL CAPACITY (ton)	2	2	3	4	5
SHIPPING WEIGHT lb.	352	352	455	500	520
SHIPPING WEIGHT (kg)	160	160	206	227	236
COMPRESSORS	Scroll I				
Quantity	1				
REFRIGERANT (R-410A)					
Quantity lb.	7.05	7.05	8.1	10.8	12.1
Quantity (kg)	3.2	3.2	3.7	4.9	5.5
REFRIGERANT METERING DEVICE	TXV				
OUTDOOR COIL					
Rows...Fins/in.	1..21	1...21	2...21	2...21	2...21
Face Area (sq ft)	13.6	13.6	13.6	19.4	21.4
OUTDOOR FAN					
Nominal CFM	2500	2500	3000	3300	3600
Diameter in.	24	24	26	26	26
Diameter (mm)	609.6	609.6	600.4	660.4	660.4
Motor Hp (Rpm)	1/12 (810)	1/12 (810)	1/5 (810)	1/5 (810)	1/5 (810)
INDOOR COIL					
Rows...Fins/in.	3...17	3...17	3...17	3...17	3...17
Face Area (sq ft)	3.7	3.7	4.7	5.7	5.7
INDOOR BLOWER					
Nominal Low Stage Cooling Airflow (Cfm)	600	600	900	1200	1200
Nominal High Stage Cooling Airflow (Cfm)	800	800	1200	1600	1750
Size in.	10x10	10x10	11x10	11x10	11x10
Size (mm.)	254x254	254x254	279.4x254	279.4x254	279.4x254
Motor HP (RPM)	1/2 (1050)	1/2 (1050)	3/4 (1000)	1.0 (1075)	1.0 (1075)
FURNACE SECTION*					
Burner Orifice No. (Qty...Drill Size) Natural Gas (Factory Installed)	1...0.125	1...#28	1...#28	1...#18	1...#18
HIGH-PRESSURE SWITCH	650 +/- 15				
(psig) Cut-out Reset (Auto)	420 +/- 25				
LOSS-OF-CHARGE / LOW-PRESSURE SWITCH (Liquid Line)	50 +/- 7				
(psig) cut-out Reset (auto)	95 +/- 7				
RETURN-AIR FILTERS†					
Throwaway Size in.	20x20x1	20x24x1	24x30x1	24x36x1	
(mm)	508x508x25	508x610x25	610x762x25	610x914x25	

*. *Based on altitude of 0 to 2000 ft (0-610 m).

†. { Required filter sizes shown are based on the larger of the AHRI (Air Conditioning Heating and Refrigeration Institute) rated cooling airflow or the heating airflow velocity of 300 ft/minute for throwaway type. Air filter pressure drop for non-standard filters must not exceed 0.08 IN. W.C.
If using accessory filter rack refer to the filter rack installation instructions for correct filter sizes and quantity.

Step 6 – Connect Condensate Drain

NOTE: When installing condensate drain connection be sure to comply with local codes and restrictions.

This unit disposes of condensate water through a 3/4 in. NPT fitting which exits through the base on the evaporator coil access side. See Fig. 3 and Fig. 4 for location.

Condensate water can be drained directly onto the roof in rooftop installations (where permitted) or onto a gravel apron in ground level installations. Install a field-supplied 2-in. (51 mm) condensate trap at the end of condensate connection to ensure proper drainage. Make sure that the outlet of the trap is at least 1 in. (25 mm) lower than the drain-pan condensate connection to prevent the pan from overflowing (See Fig. 7). Prime the trap with water. When using a gravel apron, make sure it slopes away from the unit.

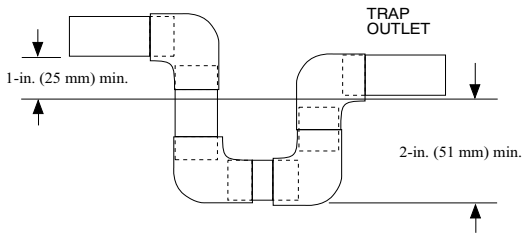

Fig. 7 – Condensate Trap

Connect a drain tube using a minimum of 3/4-in. PVC or 3/4-in. copper pipe (all field-supplied) at the outlet end of the 2-in. (51 mm) trap. Do not undersize the tube. Pitch the drain tube downward at a slope of at least 1-in. (25 mm) for every 10 ft (3.1 m) of horizontal run. Be sure to check the drain tube for leaks.

Step 7 – Install Flue Hood

The flue assembly is secured and shipped in the return air duct. Remove duct cover to locate the assembly (See Fig. 9).

NOTE: Dedicated Ultra Low NOx models MUST be installed in California Air Quality Management Districts where an Ultra Low NOx rule exists.

These models meet California air management districts' emissions requirements of 14 nanograms/Joule of useful heat or less as shipped from the factory.

NOTE: Ultra Low NOx requirements apply only to natural gas installations.

⚠ WARNING

CARBON MONOXIDE POISONING HAZARD

Failure to follow this warning could result in personal injury or death.

The venting system is designed to ensure proper venting. The flue hood assembly must be installed as indicted in this section of the unit installation instructions.

Install the flue hood as follows:

1. This installation must conform with local building codes and with NFPA 54/ANSI Z223.1 National Fuel Gas Code (NFGC), (in Canada, CAN/CGA B149.1, and B149.2) latest revision. Refer to Provincial and local plumbing or wastewater codes and other applicable local codes.
2. Remove flue hood from shipping location (inside the return section of the blower compartment-see Fig. 9). Remove the return duct cover to locate the flue hood. Place flue hood assembly over flue panel. Orient screw holes in flue hood with holes in the flue panel.
3. Secure flue hood to flue panel by inserting a single screw on the top flange and the bottom flange of the hood.

Step 8 – Install Gas Piping

The gas supply pipe enters the unit through the access hole provided. The gas connection to the unit is made to the 1/2-in. (12.7 mm) FPT gas inlet on the gas valve.

Install a gas supply line that runs to the heating section. Refer to the NFGC for gas pipe sizing. Do not use cast-iron pipe. It is recommended that a black iron pipe is used. Check the local utility for recommendations concerning existing lines. Size gas supply piping for 0.5 IN. W.C. maximum pressure drop. Never use pipe smaller than the 1/2-in. (12.7 mm) FPT gas inlet on the unit gas valve.

For natural gas applications, the gas pressure at unit gas connection must not be less than 4.0 IN. W.C. or greater than 13 IN. W.C. while the unit is operating.

A 1/8-in. (3.2 mm) NPT plugged tapping, accessible for test gauge connection, must be installed immediately upstream of the gas supply connection to the gas valve.

When installing the gas supply line, observe local codes pertaining to gas pipe installations. Refer to the NFPA 54/ANSI Z223.1 latest edition (in Canada, CAN/CGA B149.1).

NOTE: In the state of Massachusetts:

1. Gas supply connections MUST be performed by a licensed plumber or gas fitter.
2. When flexible connectors are used, the maximum length shall not exceed 36 inches (915 mm).
3. When lever handle type manual equipment shutoff valves are used, they shall be T-handle valves.
4. The use of copper tubing for gas piping is NOT approved by the state of Massachusetts.

In the absence of local building codes, adhere to the following pertinent recommendations:

1. Avoid low spots in long runs of pipe. Grade all pipe 1/4 in. (6.35 mm) for every 15 ft (4.6 m) of length to prevent traps. Grade all horizontal runs downward to risers. Use risers to connect to heating section and to meter.
2. Protect all segments of piping system against physical and thermal damage. Support all piping with appropriate straps, hangers, etc. Use a minimum of one hanger every 6 ft (1.8 m). For pipe sizes larger than 1/2 in., follow recommendations of national codes.
3. Apply joint compound (pipe dope) sparingly and only to male threads of joint when making pipe connections. Use only pipe dope that is resistant to action of liquefied petroleum gases as specified by local and/or national codes. Never use Teflon tape.
4. Install sediment trap in riser leading to heating section (See Fig. 8). This drip leg functions as a trap for dirt and condensate.
5. Install an accessible, external, manual main shutoff valve in gas supply pipe within 6 ft (1.8 m) of heating section.
6. Install ground-joint union close to heating section between unit manual shutoff and external manual main shut-off valve.
7. Pressure test all gas piping in accordance with local and national plumbing and gas codes before connecting piping to unit.

Table 2 – Maximum Gas Flow Capacity*

NOMINAL IRON PIPE SIZE (IN.)	INTERNAL DIAMETER (IN.)	LENGTH OF PIPE FT (m)†													
		10 (3)	20 (6)	30 (9)	40 (12)	50 (15)	60 (18)	70 (21)	80 (24)	90 (27)	100 (30)	125 (38)	150 (46)	175 (53)	200 (61)
1/2	.622	175	120	97	82	73	66	61	57	53	50	44	40	—	—
3/4	.824	360	250	200	170	151	138	125	118	110	103	93	84	77	72
1	1.049	680	465	375	320	285	260	240	220	205	195	175	160	145	135
1-1/4	1.380	1400	950	770	600	580	530	490	460	430	400	360	325	300	280
1-1/2	1.610	2100	1460	1180	990	900	810	750	690	650	620	550	500	460	430

*. Capacity of pipe in cu ft of gas per hr for gas pressure of 0.5 psig or less. Pressure drop of 0.5-IN. W.C. (based on a 0.60 specific gravity gas). Refer to Table 2 and National Fuel Gas Code NFPA 54/ANSI Z223.1

†. This length includes an ordinary number of fittings.

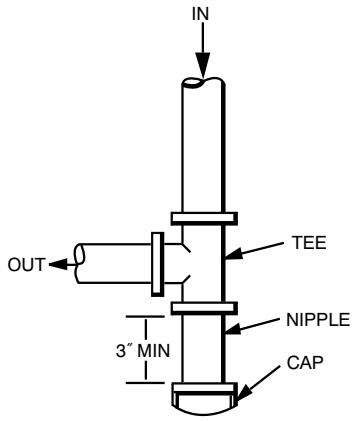

C99020

Fig. 8 – Sediment Trap

NOTE: Pressure test the gas supply system after the gas supply piping is connected to the gas valve. The supply piping must be disconnected from the gas valve during the testing of the piping systems when test pressure is in excess of 0.5 psig. Pressure test the gas supply piping system at pressures equal to or less than 0.5 psig. The unit heating section must be isolated from the gas piping system by closing the external main manual shutoff valve and slightly opening the ground-joint union.

WARNING

FIRE OR EXPLOSION HAZARD

Failure to follow this warning could result in personal injury, death and/or property damage.

- Connect gas pipe to unit using a backup wrench to avoid damaging gas controls.
- Never purge a gas line into a combustion chamber. Never test for gas leaks with an open flame. Use a commercially available soap solution made specifically for the detection of leaks to check all connections. A fire or explosion may result causing property damage, personal injury or loss of life.
- Use proper length of pipe to avoid stress on gas control manifold.
- If a flexible connector is required or allowed by authority having jurisdiction, black iron pipe shall be installed at furnace gas valve and extend a minimum of 2 in. (51 mm) outside furnace casing.
- If codes allow a flexible connector, always use a new connector. Do not use a connector which has previously serviced another gas appliance.

8. Check for gas leaks at the field-installed and factory-installed gas lines after all piping connections have been completed. Use a commercially available soap solution (or method specified by local codes and/or regulations).

Step 9 – Install Duct Connections

The unit has duct flanges on the supply- and return-air openings on the side and bottom of the unit. For downshot applications, the ductwork connects to the roof curb (See Fig. 3 and Fig. 4 for connection sizes and locations).

Configuring Units for Downflow (Vertical) Discharge

WARNING

ELECTRICAL SHOCK HAZARD

Failure to follow this warning could result in personal injury or death.

Before installing or servicing system, always turn off main power to system and install lockout tag. There may be more than one disconnect switch.

1. Open all electrical disconnects before starting any service work.
2. Remove horizontal (metal) duct covers to access vertical (downflow) discharge duct knockouts in unit basepan. (See Fig. 9.)

CAUTION

PROPERTY DAMAGE HAZARD

Failure to follow this caution may result in property damage.

Collect ALL screws that were removed. Do not leave screws on rooftop as permanent damage to the roof may occur.

3. For single-phase models only, on the discharge side only, remove the insulation covering the downshot (plastic) knockout. Insulation is held in place with aluminum tape. Please note that large chassis units have 2 pieces of insulation, and only the piece over the downshot knockout needs to be removed. Discard insulation.
4. To remove the downshot (plastic) knockouts for both supply and returns, break front and right side connecting tabs with a screwdriver and hammer. Push cover down to break rear and left side tabs. These plastic knockouts are held in place with tabs similar to an electrical knockout. Discard plastic knockout covers.
5. Set unit on roof curb.
6. Verify that the downshot ducts are aligned with the downshot knockout areas.
7. Re-install horizontal (metal) covers as needed to seal unit. Ensure opensings are air and watertight.

NOTE: The design and installation of the duct system must be in accordance with the standards of the NFPA for installation of nonresidence-type air conditioning and ventilating systems, NFPA 90A or residence-type, NFPA 90B; and/or local codes and ordinances.

Adhere to the following criteria when selecting, sizing, and installing the duct system:

1. Units are shipped for horizontal duct installation (by removing duct covers).
2. Select and size ductwork, supply-air registers, and return-air grilles according to American Society of Heating, Refrigeration and Air Conditioning Engineers (ASHRAE) recommendations.
3. Use flexible transition between rigid ductwork and unit to prevent transmission of vibration. The transition may be screwed or bolted to duct flanges. Use suitable gaskets to ensure weather tight and airtight seal.
4. All units must have field-supplied filters or accessory filter rack installed in the return-air side of the unit. Recommended sizes for filters are shown in Table 1.

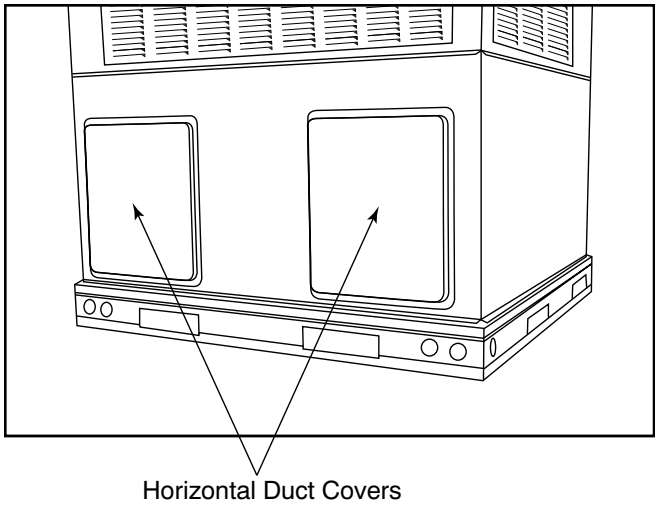

A09076

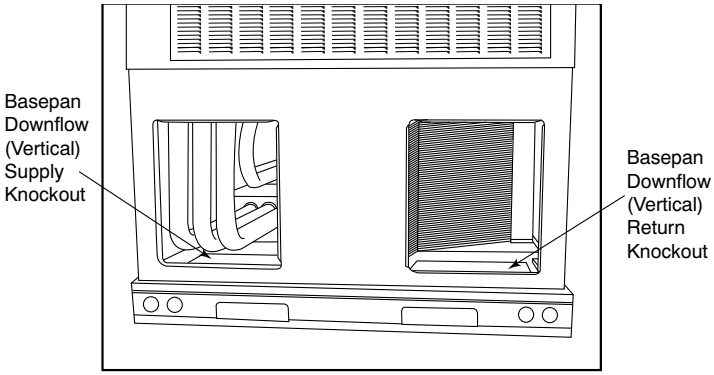

A09077

Fig. 9 – Supply and Return Duct Opening

5. Size all ductwork for maximum required airflow (either heating or cooling) for unit being installed. Avoid abrupt duct size increases or decreases or performance may be affected.
6. Adequately insulate and weatherproof all ductwork located outdoors. Insulate ducts passing through unconditioned space, and use vapor barrier in accordance with latest issue of Sheet Metal and Air Conditioning Contractors National Association (SMACNA) and Air Conditioning Contractors of America (ACCA) minimum installation standards for heating and air conditioning systems. Secure all ducts to building structure.
7. Flash, weatherproof, and vibration isolate all openings in building structure in accordance with local codes and good building practices.

Step 10 – Install Electrical Connections

WARNING

ELECTRICAL SHOCK HAZARD

Failure to follow this warning could result in personal injury or death.

The unit cabinet must have an uninterrupted, unbroken electrical ground. This ground may consist of an electrical wire connected to the unit ground screw in the control compartment, or conduit approved for electrical ground when installed in accordance with NFPA 70 (NEC) (latest edition) (in Canada, Canadian Electrical Code CSA C22.1) and local electrical codes.

⚠ CAUTION

UNIT COMPONENT DAMAGE HAZARD

Failure to follow this caution may result in damage to the unit being installed.

1. Make all electrical connections in accordance with NFPA 70 (NEC) (latest edition) and local electrical codes governing such wiring. In Canada, all electrical connections must be in accordance with CSA standard C22.1 Canadian Electrical Code Part 1 and applicable local codes. Refer to unit wiring diagram.
2. Use only copper conductor for connections between field-supplied electrical disconnect switch and unit. DO NOT USE ALUMINUM WIRE.
3. Be sure that high-voltage power to unit is within operating voltage range indicated on unit rating plate. On 3-phase units, ensure phases are balanced within 2 percent. Consult local power company for correction of improper voltage and/or phase imbalance.
4. Insulate low-voltage wires for highest voltage contained within conduit when low-voltage control wires are in same conduit as high-voltage wires.
5. Do not damage internal components when drilling through any panel to mount electrical hardware, conduit, etc.
6. Route field power supply(s) away from areas that could be damaged by lawn and garden equipment or other accidental damage.

High-Voltage Connections

When routing power leads into unit, use only copper wire between disconnect and unit. The high voltage leads should be in a conduit until they enter the duct panel; conduit termination at the duct panel must be watertight.

The unit must have a separate electrical service with a field-supplied, waterproof disconnect switch mounted at, or within sight from, the unit. Refer to the unit rating plate, NEC and local codes for maximum fuse/circuit breaker size and minimum circuit amps (ampacity) for wire sizing.

The field-supplied disconnect switch box may be mounted on the unit over the high-voltage inlet hole when the standard power and low-voltage entry points are used (See Fig. 3 and Fig. 4 for acceptable location).

NOTE: Field supplied disconnect switch box should be positioned so that it does not cover up any of the unit gas combustion supply air louvers.

See unit wiring label (Fig. 15 - Fig. 18) and Fig. 10 for reference when making high voltage connections. Proceed as follows to complete the high-voltage connections to the unit.

Single phase units:

1. Run the high-voltage (L1, L2) and ground lead into the control box.
2. Connect ground lead to chassis ground connection.
3. Locate the black and yellow wires connected to the line side of the contactor (if equipped).
4. Connect field L1 to black wire from connection 11 of the compressor contactor.
5. Connect field wire L2 to yellow wire from connection 23 of the compressor contactor.

Three-phase units:

1. Run the high-voltage (L1, L2, L3) and ground lead into the control box.
2. Connect ground lead to chassis ground connection.
3. Locate the black and yellow wires connected to the line side of the contactor (if equipped).
4. Connect field L1 to black wire from connection 11 of the compressor contactor.
5. Connect field wire L3 to yellow wire from connection 13 of the compressor contactor.
6. Connect field wire L2 to blue wire from compressor.

Special Procedures for 208-v Operation

⚠ WARNING

ELECTRICAL SHOCK HAZARD

Failure to follow this warning could result in personal injury or death.

Make sure the power supply to the unit is switched OFF and install lockout tag. before making any wiring changes.With disconnect switch open, move black wire from transformer (3/16 in. [4.8 mm]) terminal marked 230 to terminal marked 208. This retaps transformer to primary voltage of 208 vac.

⚠ CAUTION

ELECTRICAL SHOCK FIRE/EXPLOSION HAZARD

Failure to follow this warning could result in personal injury or death and property damage.

Before making any wiring changes, **make sure** the gas supply is switched off first. *Then* switch off the power

Control Voltage Connections

Do not use any type of power-stealing thermostat. Unit control problems may result.

Use no. 18 American Wire Gage (AWG) color-coded, insulated (35°C minimum) wires to make the control voltage connections between the thermostat and the unit. If the thermostat is located more than 100 ft (30.5 m) from the unit (as measured along the control voltage wires), use no. 16 AWG color-coded, insulated (35°C minimum) wires.

Standard Connection

Run the low-voltage leads from the thermostat, through the inlet hole, and into unit low-voltage splice box.

Locate eight 18-gage wires leaving control box. These low-voltage connection leads can be identified by the colors red, green, yellow, brown, blue, and white (See Fig. 10). Ensure the leads are long enough to be routed into the low-voltage splice box (located below right side of control box). Route leads through hole in bottom of control box and make low-voltage connections (See Fig. 10). Secure all cut wires, so that they do not interfere with operation of unit.

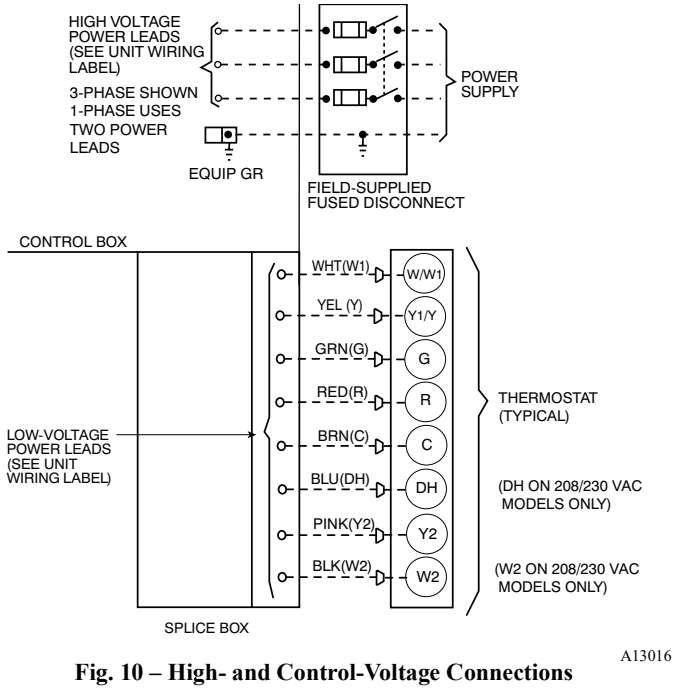

Fig. 10 – High- and Control-Voltage Connections

IMPORTANT: Dehumidification control must open control circuit on humidity rise above set point.

Use of the dehumidification cooling fan speed requires use of either a 24 VAC dehumidistat or a thermostat which includes control of a 24 VAC dehumidistat connection. In either case, the dehumidification control must open the control circuit on humidity rise above the dehumidification set point.

Heat Anticipator Setting (Electro-Mechanical Thermostats only)

The room thermostat heat anticipator must be properly adjusted to ensure proper heating performance. Set the heat anticipator, using an ammeter between the W1 and R terminals to determine the exact required setting.

NOTE: For thermostat selection purposes, use 0.18 amp for the approximate required setting. Failure to make a proper heat anticipator adjustment will result in improper operation, discomfort to the occupants of the conditioned space, and inefficient energy utilization; however, the required setting may be changed slightly to provide a greater degree of comfort for a particular installation.

Transformer Protection

The transformer is of the energy-limiting type, however a direct short will likely blow a secondary fuse. If an overload or short is present, correct overload condition and check for blown fuse on Indoor Fan board or Integrated Gas Controller. Replace fuse as required with correct size and rating.

Pre-Start-up

⚠ WARNING

ENVIRONMENTAL, FIRE, EXPLOSION, ELECTRICAL SHOCK HAZARD

Failure to follow this warning could result in personal injury or death.

1. Follow recognized safety practices and wear protective goggles when checking or servicing refrigerant system.
2. Do not operate compressor or provide any electric power to unit unless compressor plug is in place and secured.
3. Do not remove compressor plug until all electrical sources are disconnected and tagged.
4. Relieve and recover all refrigerant from system before touching or disturbing compressor plug if refrigerant leak is suspected around compressor terminals.
5. Never attempt to repair soldered connection while refrigerant system is under pressure.
6. Do not use torch to remove any component. System contains oil and refrigerant under pressure.

   To remove a component, wear protective goggles and proceed as follows:

   a. Shut off electrical power to unit and install lockout tag.
   b. Relieve and reclaim all refrigerant from system using both high- and low-pressure ports.
   c. Cut component connecting tubing with tubing cutter and remove component from unit.
   d. Carefully unsweat remaining tubing stubs when necessary. Oil can ignite when exposed to torch flame.

Use the Start-Up Checklist supplied at the end of this book and proceed as follows to inspect and prepare the unit for initial start-up:

1. Remove access panels (see Fig. 22).
2. Read and follow instructions on all DANGER, WARNING, CAUTION, and INFORMATION labels attached to, or shipped with unit.
3. Make the following inspections:
   a. Inspect for shipping and handling damage, such as broken lines, loose parts, disconnected wires, etc.
   b. Inspect all field- and factory-wiring connections. Be sure that connections are completed and tight.
   c. Ensure wires do not touch refrigerant tubing or sharp sheet metal edges.
   d. Inspect coil fins. If damaged during shipping and handling, carefully straighten fins with a fin comb.

⚠ WARNING

FIRE, EXPLOSION HAZARD

Failure to follow this warning could result in personal injury, death or property damage.

Do not purge gas supply into the combustion chamber. Do not use a match or other open flame to check for gas leaks.

Use a commercially available soap solution made specifically for the detection of leaks to check all connections. A fire or explosion may result causing property damage, personal injury or loss of life.

4. Verify the following conditions:
   a. Make sure gas line is free of air. Before lighting the unit for the first time, perform the following with the gas valve in the OFF position:

NOTE: If the gas supply pipe was not purged before connecting the unit, it will be full of air. It is recommended that the ground joint union be loosened, and the supply line be allowed to purge until the odor of gas is detected. Never purge gas lines into a combustion chamber. Immediately upon detection of gas odor, retighten the union. Allow 5 minutes to elapse, then light unit.

   b. Make sure that outdoor-fan blade is correctly positioned in the fan orifice.
   c. Make sure that air filter(s) is in place.
   d. Make sure that condensate drain trap is filled with water to ensure proper drainage.
   e. Make sure that all tools and miscellaneous loose parts have been removed.

Start-up

⚠ WARNING

FIRE, INJURY, OR DEATH HAZARD

Failure to follow this warning could result in property damage, personal injury, or death.

Do not bypass any of the safety controls in the unit, including but not limited to the main limit switch, rollout or burner rollout switch, and pressure switch/pressure transducer.

Step 1 – Check for Refrigerant Leaks

⚠ WARNING

EXPLOSION HAZARD

Failure to follow this warning could result in death, serious personal injury, and/or property damage.

Never use air or gases containing oxygen for leak testing or operating refrigerant compressors. Pressurized mixtures of air or gases containing oxygen can lead to an explosion.

Proceed as follows to locate and repair a refrigerant leak and to charge the unit:

1. Locate leak and make sure that refrigerant system pressure has been relieved and reclaimed from both high- and low-pressure ports.
2. Repair leak following accepted practices.

NOTE: Install a filter drier whenever the system has been opened for repair.

3. Add a small charge of Puron (R-410A) refrigerant vapor to system and leak-test unit.
4. Recover refrigerant from refrigerant system and evacuate to 500 microns if no additional leaks are found.
5. Charge unit with Puron (R-410A) refrigerant, using an accurate scale. Refer to unit rating plate for required charge.

Step 2 – Start-up Heating and Make Adjustments

Complete the required procedures given in the Pre-Start-Up section before starting the unit. Do not jumper any safety devices when operating the unit. Make sure that burner orifices are properly aligned. Unstable operation my occur when the burner orifices in the manifold are misaligned.

Follow the lighting instructions on the heating section operation label (located on the inside of the control access panel) to start the heating section.

NOTE: Make sure that gas supply has been purged, and that all gas piping has been checked for leaks.

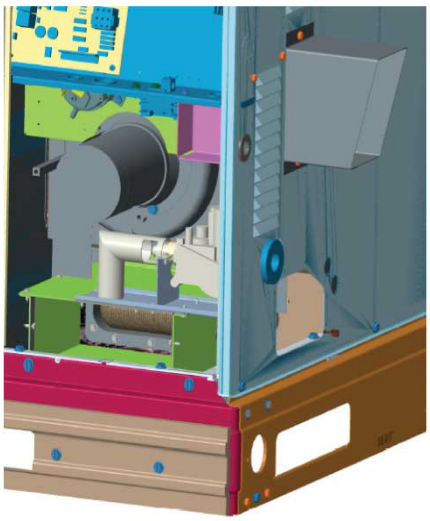

A180078

Fig. 11 – Burner Assembly

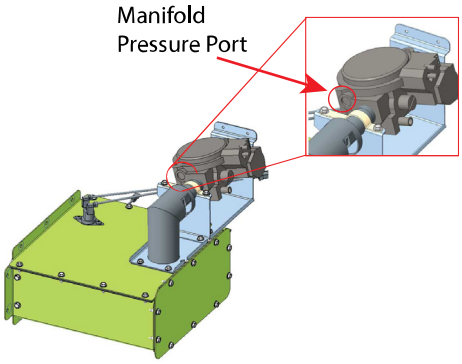

A200293

Fig. 12 – Monoport Burner

Check Heating Control

Start and check the unit for proper heating control operation as follows (see furnace lighting instructions located on the inside of the control access panel):

For 208/230 VAC Models:

Start and check the unit for proper heating control operation as follows (see furnace lighting instructions located on the inside of the control access panel):

1. Place room thermostat SYSTEM switch in the HEAT position and the fan switch is placed in AUTO position.
2. Set the heating temperature control of the thermostat above room temperature.
3. On a call for heating, the inducer motor will start up for a 30 second pre-purge.
4. The control will then check to see the pressure switch closed. Then the main burner should light within 5 sec. of the spark being energized. If the burners do not light, there is a 22-sec. delay before another 5-sec. try. If the burners still do not light, this sequence is repeated. If the burners do not light on the 4th ignition attempt, there is a lockout. To reset the control, break the 24-v power to W.

NOTE: The ULN system will sound different from a traditional furnace that utilizes inshot burners. For the ULN system, the access door is part of the system and must be installed on the unit for any sound evaluations.

5. The evaporator fan will turn on 30 sec. after the flame has been established. The evaporator fan will turn off 90 sec. after the thermostat has been satisfied. Please note that the integrated gas unit controller (IGC) has the capability to automatically reduce the evaporator "ON" delay and increase the evaporator "OFF" delay in the event of high duct static and/or partially-clogged filter.

Check Gas Input

Check gas input and manifold pressure after unit start-up (See Table 5). If adjustment is required proceed as follows:

- The rated gas inputs shown in Table 5 are for altitudes from sea level to 2000 ft (610 m) above sea level. These inputs are based on natural gas with a heating value of 1025 Btu/ft^3 at 0.60 specific gravity.

Table 3 – Altitude Derate Multiplier for U.S.A.

Altitude ft (m)	Percent of Derate	Derate Multiplier Factor*
0-2000 (0-610)	0	1.00

*. Derate multiplier factors are based on midpoint altitude for altitude range.

When the gas supply being used has a different heating value or specific gravity, refer to national and local codes, or contact your distributor to determine the required orifice size.

⚠ CAUTION

UNIT DAMAGE HAZARD

Failure to follow this caution may result in reduced unit and/or component life.

Do Not redrill an orifice. Improper drilling (burrs, out-of-round holes, etc.) can cause excessive burner noise and misdirection of burner flame. If orifice hole appears damaged or it is suspected to have been redrilled, check orifice hole with a numbered drill bit of correct size.

Adjust Gas Input

The gas input to the unit is determined by measuring the gas flow at the meter or by measuring the manifold pressure. Measuring the gas flow at the meter is recommended for natural gas units.

Measure Gas Flow (Natural Gas Units)

Minor adjustment to the gas flow can be made by changing the manifold pressure. The manifold pressure must be maintained between 3.2 and 3.8 IN. W.C.

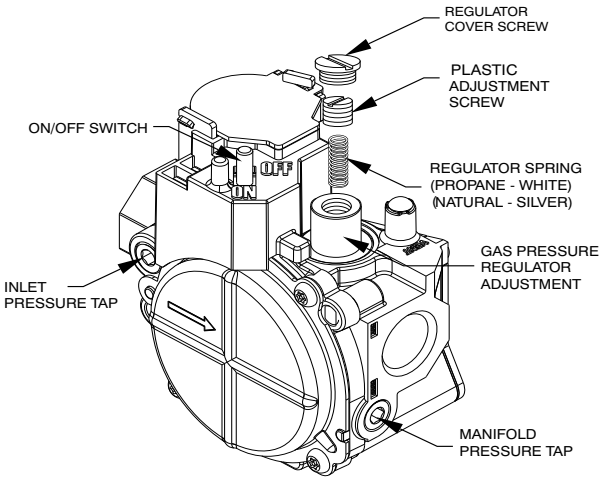

A07551

Fig. 13 – Single-Stage Gas Valve (208/230 VAC Models)

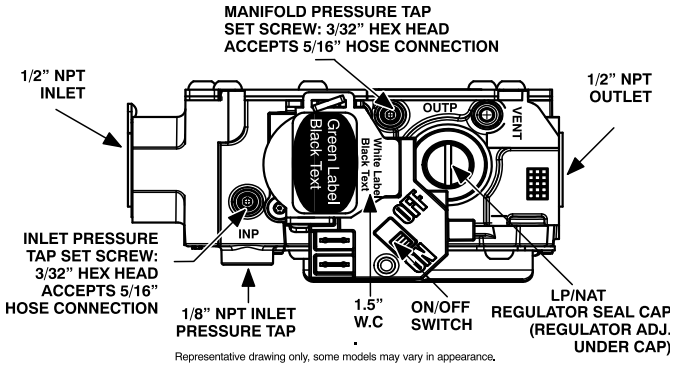

A170118

Fig. 14 – Single-Stage Gas Valve with Tower Pressure Ports

If larger adjustments are required, change main burner orifices following the recommendations of national and local codes.

NOTE: All other appliances that use the same meter must be turned off when gas flow is measured at the meter.

Proceed as follows:

1. Turn off gas supply to unit.
2. Manifold pressure connections
   a. For standard gas valves, remove manifold pressure tap cover using an allen wrench. (See Fig. 13). Install barbed pressure tap and hose to connect to manometer. Turn on gas supply to unit.
   b. For gas valve with tower pressure ports, loosen set screw on manifold tower pressure tap no more than one full turn with a 3/32-in. hex wrench. (See Fig. 14.) Connect manometer by sliding 5/16" connecting hose over the manifold tower pressure port. Turn on gas supply to unit.
3. Record number of seconds for gas meter test dial to make one revolution.
4. Divide number of seconds in Step 3 into 3600 (number of seconds in one hr).
5. Multiply result of Step 4 by the number of cubic feet (cu ft) shown for one revolution of test dial to obtain cubic feet (cu ft) of gas flow per hour.
6. Multiply result of Step 5 by Btu heating value of gas to obtain total measured input in Btuh. Compare this value with heating input shown in Table 5 (Consult the local gas supplier if the heating value of gas is not known).

EXAMPLE: Assume that the size of test dial is 1 cu ft, one revolution takes 32 sec, and the heating value of the gas is 1050 Btu/ft3. Proceed as follows:

1. 41 sec. to complete one revolution
2. 3600 / 41 = 87.8
3. 87.8 x 1 = 87.8 ft^3 of gas flow/hr
4. 87.8 x 1050 = 92,190 Btuh input

If the desired gas input is 89,000 Btuh, only a minor change in the manifold pressure is required.

Observe manifold pressure and proceed as follows to adjust gas input:

1. Remove regulator cover screw over plastic adjustment screw on gas valve (See Fig. 13 and Fig. 14).
2. Turn plastic adjustment screw clockwise to increase gas input, or turn plastic adjustment screw counterclockwise to decrease input (See Fig. 13 and Fig. 14). Manifold pressure must be between 3.2 and 3.8 IN. WC.

NOTE: Manifold pressure must be checked with the access door on.

Table 4 – High Altitude Compensation, Natural Gas - Single and Three Phase Models

Nameplate Input (Btu/hr)	Rated Heating Input (Btu/hr), Natural Gas at Installation Altitude Above Sea Level, U.S.A.
	0 to 2000 ft* (0-610 m)
45,000	45,000
60,000	60,000
89,000	89,000

*. Altitude of 2001 ft. and above is not allowed.

Table 5 – Heating Inputs

Heating Input (BTUH)	Number of Orifices	Gas Supply Pressure (IN. W.C.)				Manifold Pressure (IN. W.C.)	
		Natural*		Propane			
		Min	Max	Min	Max	Natural*	Propane
45,000	1	5	13.0	N/A	N/A	3.2~3.8	N/A
60,000	1	4.5	13.0	N/A	N/A	3.2~3.8	N/A
89,000	1	5	13.0	N/A	N/A	3.2~3.8	N/A

*. Based on altitudes from sea level to 2000 ft (610 m) above sea level.
N/A = Not applicable (Units are not convertible to propane)

WARNING

FIRE AND UNIT DAMAGE HAZARD

Failure to follow this warning could result in personal injury or death and/or property damage.

Unsafe operation of the unit may result if manifold pressure is outside this range.

3. Replace regulator cover screw on gas valve (See Fig. 13 and Fig. 14).
4. Turn off gas supply to unit.
5. Removing manometer from pressure tab.
   a. For standard gas valve, remove manometer hose and barbed pressure tap. Replace pressure tap cover using an allen wrench. (See Fig. 13.)
   b. For gas valve with tower pressure port, remove connecting hose. Tighten set screw on manifold pressure port using a 3/32” hex wrench. (See Fig. 14.)
6. Turn on gas to unit and check for leaks.

Table 6 – Natural Gas Orifice Sizes and Manifold Pressure Single and Three Phase Models

Nameplate Input (Btu/hr)		Altitude of Installation (FT. Above Sea Level) U.S.A.*
		0 to 2000 (0-610 m)
45,000	Orifice No. (Qty)	0.125-in.
	Manifold Press. (in. W.C.)	3.2~3.8
60,000	Orifice No. (Qty)	28 (1)
	Manifold Press. (in. W.C.)	3.2~3.8
89,000	Orifice No. (Qty)	18 (1)
	Manifold Press. (in. W.C.)	3.2~3.8

*. In the U.S.A., the input rating for altitudes above 2000 ft (610m) must be reduced by 4% for each 1000 ft (305 m) above sea level.
In Canada, the input rating for altitudes from 2001 to 4500 ft (611 to 1372 m) above sea level must be derated by 10% by an authorized gas conversion station or dealer.
For Canadian Installations from 2000 to 4500 ft (610-1372 m), use U.S.A. column 2001 to 3000 ft (611 to 914 m).

CONNECTION WIRING DIAGRAM
DANGER: ELECTRICAL SHOCK HAZARD DISCONNECT POWER BEFORE SERVICING
SCHEMATIC 208/230-1-60

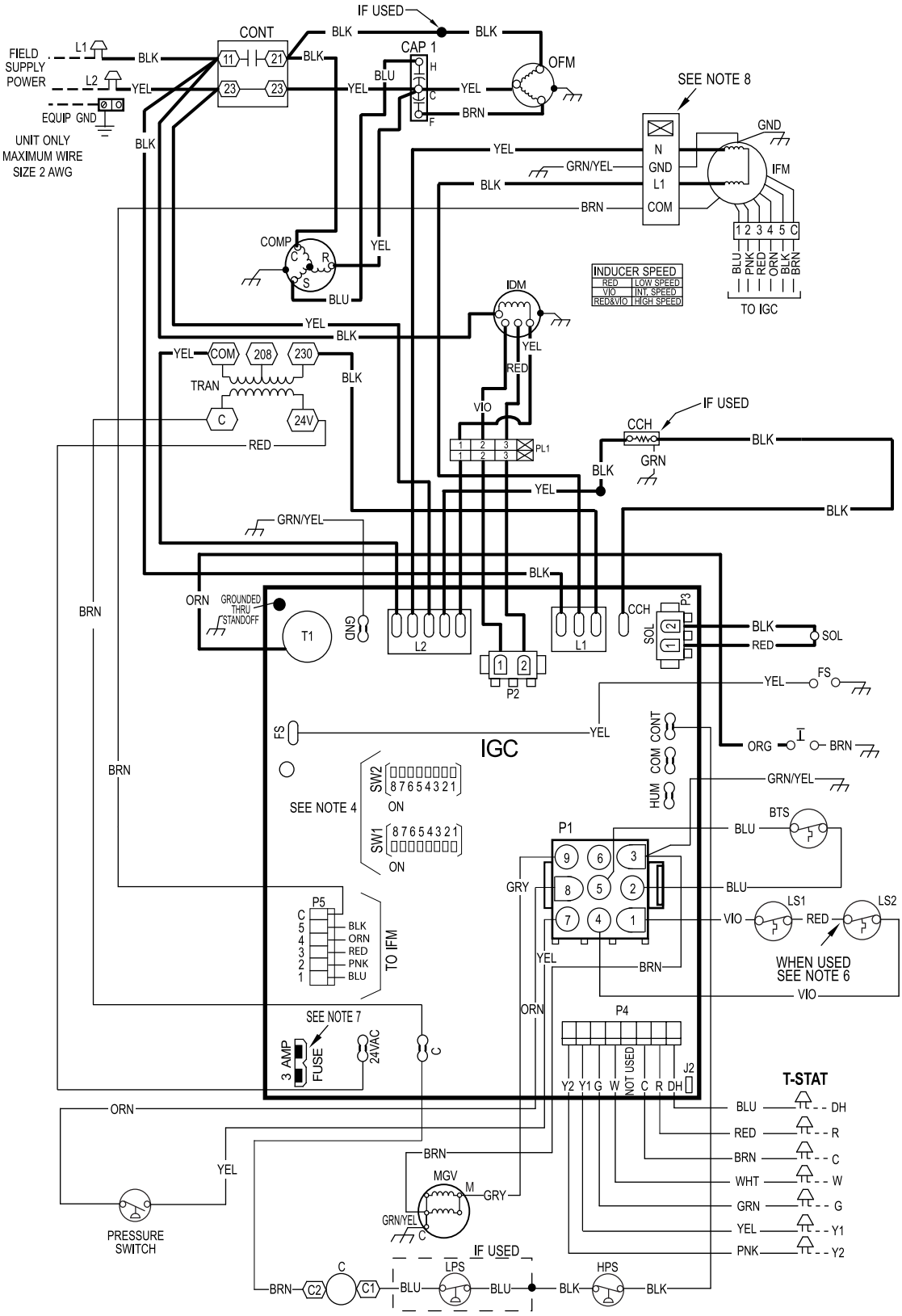

A230036

Fig. 15 – 208/230-1-60 Connection Wiring Diagram

LADDER WIRING DIAGRAM
DANGER: ELECTRICAL SHOCK HAZARD DISCONNECT POWER BEFORE SERVICING

LEGEND

	FIELD SPLICE
	TERMINAL (MARKED)
	TERMINAL (UNMARKED)
	SPLICE
	SPLICE (MARKED)
	FACTORY LO VOLTAGE
	FIELD CONTROL WIRING
	FIELD POWER WIRING
	ACCESSORY OR OPTIONAL WIRING
	FACTORY HI VOLTAGE
BTS	BURNER THERMAL SWITCH
C	CONTACTOR
CAP1	CAPACITOR, COMP
CAP2	CAPACITOR, INDUCER (WHEN USED)
CCH	CRANKCASE HEATER
CHS	CRANKCASE HEATER SWITCH
COMP	COMPRESSOR MOTOR
CONT	COMPRESSOR CONTACTOR
EQUIP	EQUIPMENT
FS	FLAME SENSOR
GND	GROUND
HPS	HIGH PRESSURE SWITCH
I	IGNITOR
IDM	INDUCED DRAFT MOTOR
IFM	INDOOR FAN MOTOR
IGC	INTEGRATED GAS UNIT CONTROLLER
LPS	LOW PRESSURE SWITCH
LS1	PRIMARY LIMIT SWITCH
LS2	SECONDARY LIMIT SWITCH
MGV	MAIN GAS VALVE
OFM	OUTDOOR FAN MOTOR
OT	QUADRUPLE TERMINAL
PEV	PRESSURE EQUALIZER VALVE (IF USED)
TRAN	TRANSFORMER
T-STAT	THERMOSTAT
SOL	COMPRESSOR SOLENOID

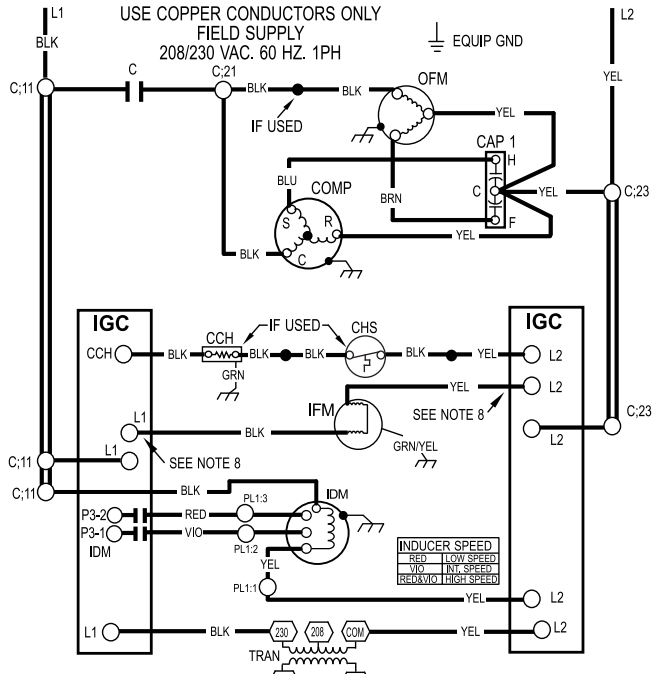

1Ø UNIT COMPONENT ARRANGEMENT

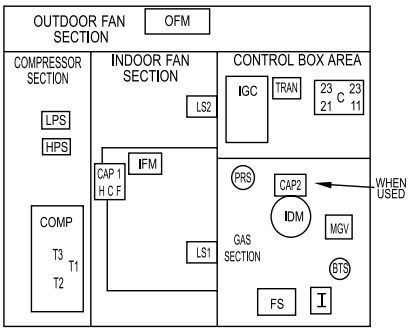

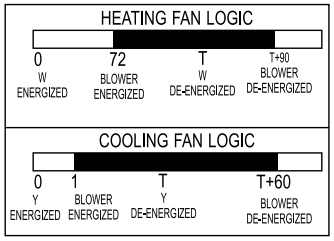

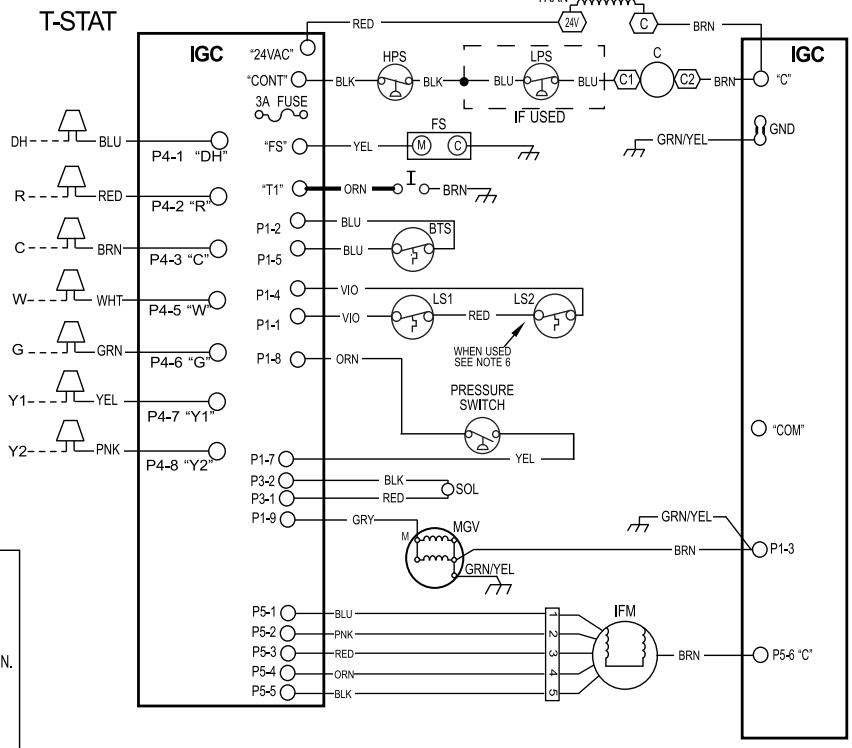

NOTES:

1. IF ANY OF THE ORIGINAL WIRES FURNISHED ARE REPLACED THEY MUST BE REPLACED WITH THE SAME WIRE OR IT'S EQUIVALENT.
2. SEE PRE-SALE LITERATURE FOR THERMOSTATS.
3. USE 75 DEGREES C COPPER CONDUCTORS FOR FIELD INSTALLATION.
4. REFER TO INSTALLATION INSTRUCTIONS FOR CORRECT SPEED SELECTIONS FOR HEATING AND COOLING ON YOUR UNIT.
6. ON SOME MODELS LS1 AND LS2 ARE WIRED IN SERIES. ON OTHER MODELS ONLY LS1 IS USED.
7. THIS FUSE IS MANUFACTURED BY LITTLE FUSE, P/N 287003.
8. DO NOT DISCONNECT PLUG UNDER LOAD.
9. N.E.C. CLASS 2, 24V.
11. INDUCER MOTOR USES A 230V CONTROL SIGNAL.

347820–701 REV. D

347820-701 REV. D

A230037

Fig. 16 – 208/230-1-60 Ladder Wiring Diagram

CONNECTION WIRING DIAGRAM
DANGER: ELECTRICAL SHOCK HAZARD DISCONNECT POWER BEFORE SERVICING
SCHEMATIC 208/230-3-60

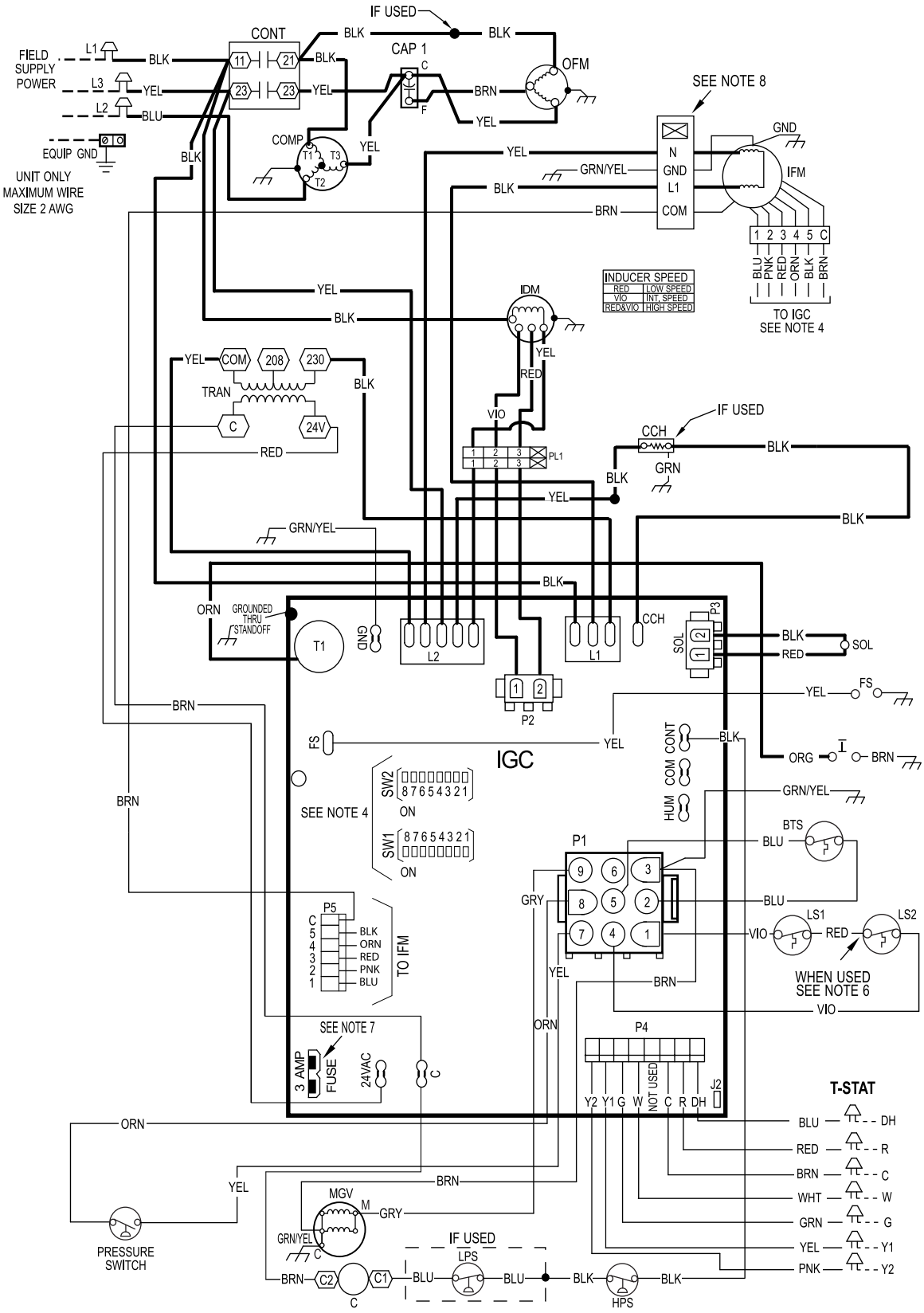

A230038

Fig. 17 – 208/230-3-60 Connection Wiring Diagram Gas Inputs 40, 60, 90 KBtu/hr

LADDER WIRING DIAGRAM
DANGER: ELECTRICAL SHOCK HAZARD DISCONNECT POWER BEFORE SERVICING

LEGEND

	FIELD SPLICE
	TERMINAL (MARKED)
	TERMINAL (UNMARKED)
	SPLICE
	SPLICE (MARKED)
	FACTORY LO VOLTAGE
	FIELD CONTROL WIRING
	FIELD POWER WIRING
	ACCESSORY OR OPTIONAL WIRING
	FACTORY HI VOLTAGE
BTS	BURNER THERMAL SWITCH
C	CONTACTOR
CAP1	CAPACITOR, COMP
CAP2	CAPACITOR, INDUCER (WHEN USED)
CCH	CRANKCASE HEATER
CHS	CRANKCASE HEATER SWITCH
COMP	COMPRESSOR MOTOR
CONT	COMPRESSOR CONTACTOR
EQUIP	EQUIPMENT
FS	FLAME SENSOR
GND	GROUND
HPS	HIGH PRESSURE SWITCH
I	IGNITOR
IDM	INDUCED DRAFT MOTOR
IFM	INDOOR FAN MOTOR
IGC	INTEGRATED GAS UNIT CONTROLLER
LPS	LOW PRESSURE SWITCH
LS1	PRIMARY LIMIT SWITCH
LS2	SECONDARY LIMIT SWITCH
MGV	MAIN GAS VALVE
OFM	OUTDOOR FAN MOTOR
OT	QUADRUPLE TERMINAL
TRAN	TRANSFORMER
T-STAT	THERMOSTAT
SOL	COMPRESSOR SOLENOID

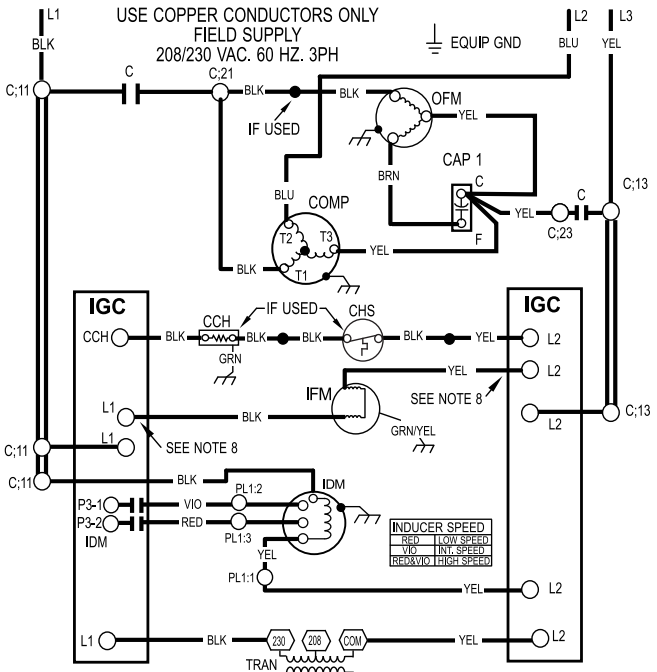

3Ø UNIT COMPONENT ARRANGEMENT

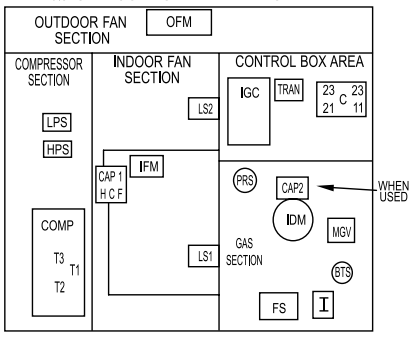

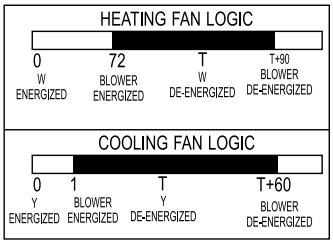

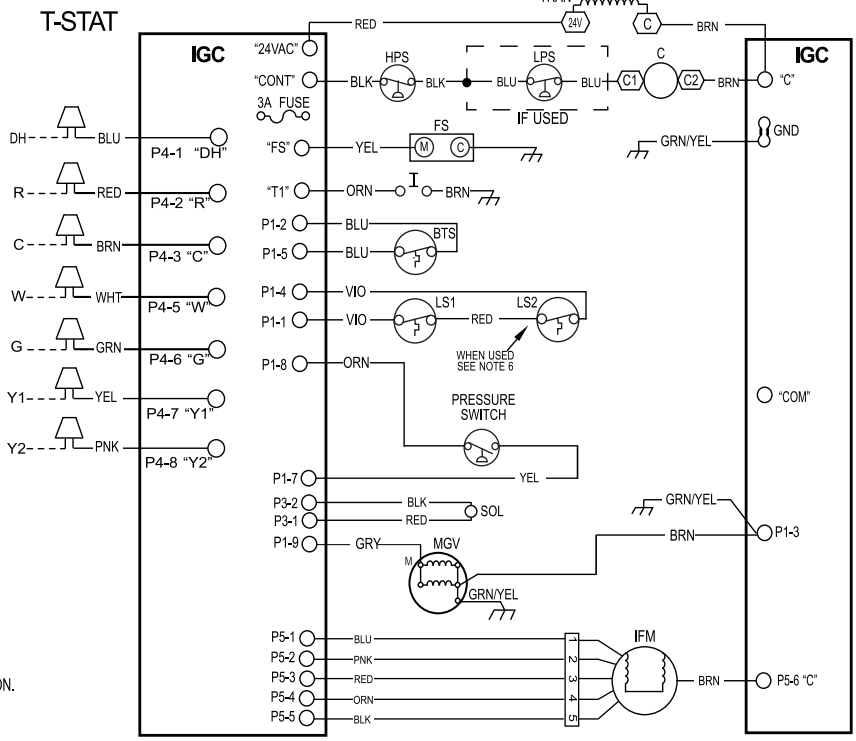

NOTES:

1. IF ANY OF THE ORIGINAL WIRES FURNISHED ARE REPLACED THEY MUST BE REPLACED WITH THE SAME WIRE OR IT'S EQUIVALENT.
2. SEE PRE-SALE LITERATURE FOR THERMOSTATS.
3. USE 75 DEGREES C COPPER CONDUCTORS FOR FIELD INSTALLATION.
4. REFER TO INSTALLATION INSTRUCTIONS FOR CORRECT SPEED SELECTIONS FOR HEATING AND COOLING ON YOUR UNIT.
6. ON SOME MODELS LS1 AND LS2 ARE WIRED IN SERIES. ON OTHER MODELS ONLY LS1 IS USED.
7. THIS FUSE IS MANUFACTURED BY LITTLE FUSE, P/N 287003.
8. DO NOT DISCONNECT PLUG UNDER LOAD.
9. N.E.C. CLASS 2, 24V.
10. INDUCER MOTOR USES A 230V CONTROL SIGNAL.

347821-701 REV. D

347821-701 REV. D

A230039

Fig. 18 – 208/230-3-60 Ladder Wiring Diagram Gas Inputs 40, 60, 90 KBtu/hr

Normal Operation

An LED (light-emitting diode) indicator is provided on the integrated gas unit controller (IGC) to monitor operation. The IGC is located by removing the control access panel (see Fig. 22). During normal operation, the LED is continuously on (See Table 7 for error codes).

Airflow and Temperature Rise

The heating section for each size unit is designed and approved for heating operation within the temperature-rise range(s) stamped on the unit rating plate.

Table 9 show the approved temperature rise range for each heating input and stage, and the air delivery cfm at various temperature rises for a given external static pressure. The heating operation airflow must produce a temperature rise that falls within the approved range for each heating stage. For single phase units only, “High” blower speed is for high static, high stage cooling and must not be used for gas heating speed.

Refer to Indoor Airflow and Airflow Adjustments section to adjust heating airflow when required.

Heating Sequence of Operation (Ultra Low NOx Single and Three Phase Models)

On a call for heating, terminal W of the thermostat is energized, starting the induced-draft motor for a 30 second pre-purge at intermediate speed. When the pressure switch senses that the induced-draft motor is moving sufficient combustion air, the burner sequence begins. This function is controlled by the integrated gas unit controller (IGC).

After 30 sec of pre-purge is complete, the pressure switch checks for sufficient combustion. Then, the gas valve energizes and the system attempts to ignite with igniter being energized. The igniter energizes for 5 sec and integrated gas controller (IGC) allows system to sense flame for 2 sec at the end of 5 sec of ignition trial. On first successful ignition, system stays at the intermediate inducer speed for 10 sec and gradually ramps up to the high speed for steady-state operation. The system uses the same logic for 2nd ignition trial. If a 3rd or 4th ignition attempt is needed, the inducer speed is decreased to the low speed. On a successful light on the 3rd or 4th attempt, the inducer speed is increased to the intermediate speed for about 10 seconds and then gradually ramps up to the high speed for steady-state operation. In case the 4th attempt fails, the system will lock out for 1 hr. After 1 hr. lock out period, the system starts with normal operating sequence. Once flame is established and proven successfully, indoor (evaporator) fan motor is energized after 30 seconds. When the thermostat is satisfied and W is de-energized, the pre-mix burner will stop firing and the indoor (evaporator) fan motor shuts off after a 90 second time-off delay. Please note that the IGC has the capability to automatically decrease the indoor (evaporator) fan motor "ON" delay and increase the indoor (evaporator) fan motor "OFF" delay in the event of high duct static and/or partially-clogged filter.

Limit Switches

Normally closed limit switch(es) (LS) complete the control circuit. Should the leaving-air temperature rise above the maximum allowable temperature, the limit switch opens and the control circuit “breaks.” Any interruption in the control circuit instantly closes the gas valve and stops gas flow to the burners. The blower motor continues to run until LS resets.

When the air temperature at the limit switch drops to the low-temperature setting of the limit switch, the switch closes and completes the control circuit. The direct-spark ignition system cycles and the unit returns to normal heating operation.

Table 7 – LED Indications

STATUS CODE	LED INDICATION
Normal Operation*2	On
No Power or Hardware Failure	Off
Check Fuse, Low Voltage Circuit	1 Flash
Limit Switch Fault	2 Flashes
Flame Sense Fault	3 Flashes
Four Consecutive Limit Switch Faults	4 Flashes
Ignition Lockout Fault	5 Flashes
Pressure Switch Fault	6 Flashes
Burner Thermal Switch Fault (Ultra Low NOx models)	7 Flashes
Internal Control Fault	8 Flashes
Temporary 1 hr auto reset†	8 Flashes

*. LED indicates acceptable operation. Do not change ignition control board.
†. This code indicates an internal processor fault that will reset itself in one hr. Fault can be caused by stray RF signals in the structure or nearby. This is a UL requirement.

NOTES:
1. When W is energized the burners will remain on for a minimum of 60 sec.
2. If more than one error code exists they will be displayed on the LED in sequence.

Burner Thermal Switch (Ultra Low NOx)

The Burner Thermal Switch (BTS) is used on ULN units and is located on the top of the burner box. This switch functions the same as the rollout with the same Fault Code (7 flashes) on the IGC board.

Step 3 – Start-up Cooling and Make Adjustments

Complete the required procedures given in the Pre-Start-Up section before starting the unit. Do not jumper any safety devices when operating the unit. Do not operate the compressor when the outdoor temperature is below 40°F (4.4°C) (unless accessory low-ambient kit is installed). Do not rapid-cycle the compressor. Allow 5 minutes between on cycles to prevent compressor damage.

Checking Cooling Control Operation

Start and check the unit for proper control operation as follows:

1. Place room thermostat SYSTEM switch or MODE control in OFF position. Observe that blower motor starts when FAN mode is placed in FAN ON position and shuts down when FAN MODE switch is placed in AUTO position.
2. Thermostat:
   On a typical two stage thermostat, when the room temperature rises 1 or 2 degrees above the cooling control setting of the thermostat, the thermostat completes the circuit between thermostat terminal R and terminals Y1, and G. These completed circuits through the thermostat connect the contactor coil (C) (through unit wire Y1) and indoor fan board (through unit wire G) across the 24-v. secondary of transformer (TRAN).
   On a typical two stage thermostat, when the room temperature is several degrees above the cooling control setting of the thermostat, the thermostat completes the circuit between terminal R and terminals T1, Y2, and G.
3. When using an automatic changeover room thermostat place both SYSTEM or MODE control and FAN mode stitches in AUTO positions. Observe that unit operates in Cooling mode when temperature control is set to “call for Cooling” (below room temperature).

NOTE: Once the compressor has started and then has stopped, it should not be started again until 5 minutes have elapsed.

IMPORTANT: Three-phase, scroll compressors are direction oriented. Unit must be checked to ensure proper compressor 3-phase power lead orientation. If not corrected within 5 minutes, the internal protector will shut off the compressor. The 3-phase power leads to the unit must be reversed to correct rotation. When turning backwards, the difference between compressor suction and discharge pressures will be minimal.

Checking and Adjusting Refrigerant Charge

The refrigerant system is fully charged with Puron (R-410A) refrigerant and is tested and factory sealed. Allow system to operate a minimum of 15 minutes before checking or adjusting charge.

NOTE: Adjustment of the refrigerant charge is not required unless the unit is suspected of not having the proper Puron (R-410A) charge.

A subcooling chart is attached to the inside of the compressor access panel. (See Table 8 and Fig. 22.) The chart includes the required liquid line temperature at given discharge line pressures and outdoor ambient temperatures for high stage cooling.

An accurate thermocouple- or thermistor-type thermometer, and a gauge manifold are required when using the subcooling charging method for evaluating the unit charge. Do not use mercury or small dial-type thermometers because they are not adequate for this type of measurement.

⚠ CAUTION

UNIT DAMAGE HAZARD

Failure to follow this caution may result in unit damage.

When evaluating the refrigerant charge, an indicated adjustment to the specified factory charge must always be very minimal. If a substantial adjustment is indicated, an abnormal condition exists somewhere in the cooling system, such as insufficient airflow across either coil or both coils.

IMPORTANT: When evaluating the refrigerant charge, an indicated adjustment to the specified factory charge must always be very minimal. If a substantial adjustment is indicated, an abnormal condition exists somewhere in the cooling system, such as insufficient airflow across either coil or both coils.

Proceed as follows:

1. Remove caps from low- and high-pressure service fittings.
2. Using hoses with valve core depressors, attach low- and high-pressure gauge hoses to low- and high-pressure service fittings, respectively.
3. Start unit in high stage cooling mode and let unit run until system pressures stabilize.
4. Measure and record the following:
   a. Outdoor ambient-air temperature (°F [°C] db).
   b. Liquid line temperature (°F [°C]).
   c. Discharge (high-side) pressure (psig).
   d. Suction (low-side) pressure (psig) (for reference only).
5. Using "Subcooling Charging Charts," compare outdoor-air temperature (°F [°C] db) with the discharge line pressure (psig) to determine desired system operating liquid line temperature (See Table 8).
6. Compare actual liquid line temperature with desired liquid line temperature. Using a tolerance of ± 2°F (±1.1°C), add refrigerant if actual temperature is more than 2°F (1.1°C) higher than proper liquid line temperature, or remove refrigerant if actual temperature is more than 2°F (1.1°C) lower than required liquid line temperature.

NOTE: If the problem causing the inaccurate readings is a refrigerant leak, refer to the Check for Refrigerant Leaks section.

Indoor Airflow and Airflow Adjustments

⚠ CAUTION

UNIT OPERATION HAZARD

Failure to follow this caution may result in unit damage.

For cooling operation, the recommended airflow is 350 to 450 cfm for each 12,000 Btuh of rated cooling capacity. For heating operation, the airflow must produce a temperature rise that falls within the range stamped on the unit rating plate.

NOTE: Be sure that all supply-and return-air grilles are open, free from obstructions, and adjusted properly.

⚠ WARNING

ELECTRICAL SHOCK HAZARD

Failure to follow this warning could result in personal injury or death.

Disconnect electrical power to the unit and install lockout tag before changing blower speed(s).

This unit has independent fan speeds for low stage cooling and high stage cooling. In addition, 208/230 VAC models have the field-selectable capability to run enhanced dehumidification ('DHUM') speeds on high stage cooling and low stage cooling (as low as 320CFM per ton). Coupled with the improved dehumidification associated with low stage cooling, the DHUM speeds allow for a complete dehumidification solution independent of cooling stage.

The evaporator fan motor is factory set to provide 5 different fan speeds to choose from for the various operation modes. 208/230 VAC models are factory-shipped with 4 speed wires connected with one spare speed wire available.

Selection of Proper Fan Speeds for Operation Modes:

NOTE: All models are factory-shipped for nominal high stage and low stage cooling airflow operation at minimum external static pressure. Many models are factory-shipped for nominal high stage and/or low stage gas heating airflow at minimum external static pressure. Table 9 (208/230 VAC models) provide airflow data for higher external static pressures.

Gas Heating (208/230 VAC models): Table 9 show the suitability of each speed for a given external static pressure for high stage gas heating. Any speed/static combination that is outside the rise range is marked "NA" and must not be used. For single phase units only, "High" blower speed is for high static, high stage cooling only and must not be used for high stage gas heating speed. The unit must operate within the high stage gas heat rise range printed on the rating plate.

Low Stage Cooling (All models): Using Table 9 and the nominal airflow for low stage cooling (Table 1) find the external static pressure drops for wet coil, economizer, and filter, and add them to dry coil measured on the system. Using this total static pressure, use Table 9 (208/230 VAC models) to find the airflows available at the total static pressure. For 208/230 VAC models, connect the chosen fan speed wire to "LO COOL" connection on the IGC Board (see Fig. 19).

High Stage Cooling (All models) Using Table 9 find the external static pressure drops for wet coil, economizer, and filter, and add them to dry coil measured on the system. Using this total static pressure, use Table 9 (208/230 VAC models) to find the airflows available at the total static pressure. The speed chosen must provide airflow of between 350 to 450 CFM per ton of cooling. For 208/230 VAC models, connect the chosen fan speed wire to "HI COOL" connection on the IGC Board (See Fig. 19).

Enhanced Dehumidification Cooling (208/230 VAC Models): Using the total static pressure for selecting the high stage cooling speed, use

Table 9 to find lower speed/airflows available at that total static pressure. All airflows not shaded in Table 9 are acceptable for Dehum speed. The speed chosen must provide airflow of between 320 CFM per ton of cooling and rated airflow. Set dip switches according to speed desired. Repeat for low stage cooling.

To activate the enhanced dehumidification cooling mode, the shunt jumper in Fig. 19 must be moved from the No DH to DH selection (See Fig. 19, close up).

Continuous Fan (All models): Refer to Table 9 for acceptable taps available for Continuous Fan Operation.

Cooling Sequence of Operation

a. Continuous Fan

(1.) Thermostat closes circuit R to G energizing the blower motor for continuous fan. The indoor fan is energized on low speed.

b. Cooling Mode

(1.) Low Stage: Thermostat closes R to G, R to Y1. The compressor and indoor fan are energized on low speed. The outdoor fan is also energized.

(2.) High Stage: Thermostat closes R to G, R to Y1, R to Y2. The compressor and indoor fan are energized on high speed. The outdoor fan is also energized.

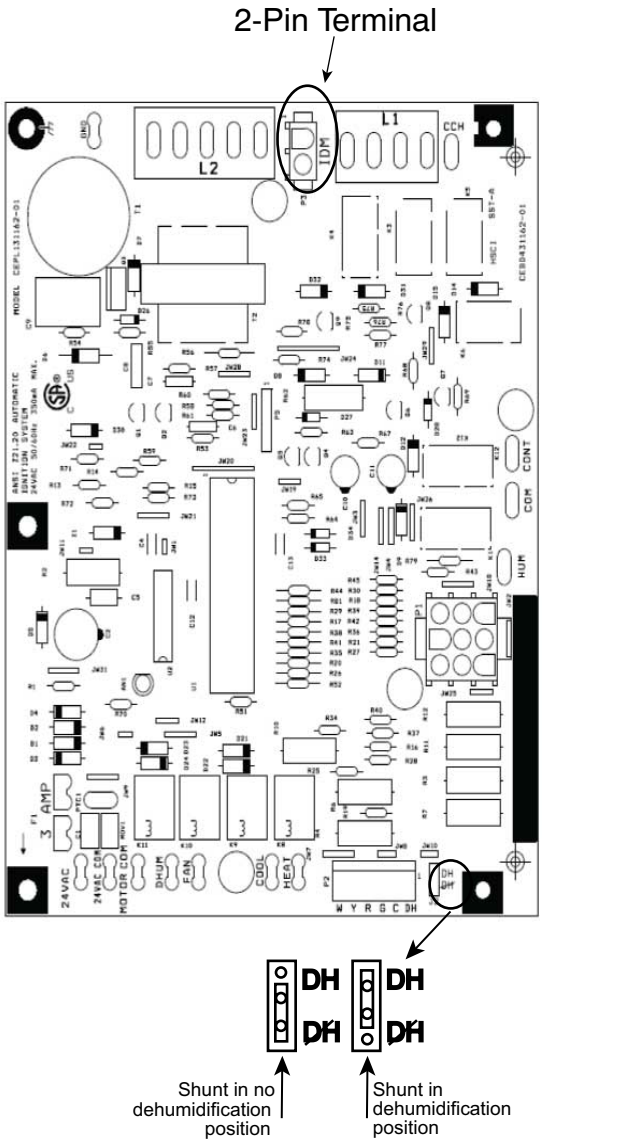

Fig. 19 – Interface Fan Board (IGC) 208/230 VAC Models

Table 8 – Subcooling Charging Chart

Required Subcooling °F(°C)					
Model Size	Outdoor Ambient Temperature °F(°C)				
	75 (24)	85 (29)	95 (35)	105 (41)	115 (46)
024	15(8.3)	15(8.3)	15(8.3)	15(8.3)	15(8.3)
036	12(6.7)	12(6.7)	12(6.7)	11(6.1)	10(5.6)
048	13(7.2)	13(7.2)	12(6.7)	12(6.7)	12(6.7)
060	15(8.3)	15(8.3)	15(8.3)	15(8.3)	15(8.3)

Notes:

1- Subcooling values calculated using High Stage.

2- System is factory-charged to provide proper subcooling performance. If system is opened or if performance issues are suspected, then subcooling must be checked

Charging Procedure:

1- Measure Discharge line pressure by attaching a gauge to the service port.

2- Measure the Liquid line temperature by attaching a temperature sensing device to it.

3- Insulate the temperature sensing device so that the Outdoor Ambient doesn't affect the reading.

4- Refer to the required Subcooling in the table based on the model size and the Outdoor Ambient temperature.

5- Interpolate if the Outdoor ambient temperature lies in between the table values.

6- Find the Pressure Value in the table corresponding to the the measured Pressure of the Compressor Discharge line.

7- Read across from the Pressure reading to obtain the Liquid line temperature for a required Subcooling

8- Add Charge if the measured temperature is higher than the table value.

9 - Remove charge if the measured temperature is lower than the table value.

349856−701 REV. −

Required Liquid Line Temperature for a Specific Subcooling (R-410A)					
Pressure (psig)	Required Subcooling (°F)				
	5	10	15	20	25
189	61	56	51	46	41
196	63	58	53	48	43
203	66	61	56	51	46
210	68	63	58	53	48
217	70	65	60	55	50
224	72	67	62	57	52
231	74	69	64	59	54
238	76	71	66	61	56
245	77	72	67	62	57
252	79	74	69	64	59
260	81	76	71	66	61
268	83	78	73	68	63
276	85	80	75	70	65
284	87	82	77	72	67
292	89	84	79	74	69
300	91	86	81	76	71
309	93	88	83	78	73
318	95	90	85	80	75
327	97	92	87	82	77
336	99	94	89	84	79
345	101	96	91	86	81
354	103	98	93	88	83
364	105	100	95	90	85
374	107	102	97	92	87
384	108	103	98	93	88
394	110	105	100	95	90
404	112	107	102	97	92
414	114	109	104	99	94
424	116	111	106	101	96
434	118	113	108	103	98
444	119	114	109	104	99
454	121	116	111	106	101
464	123	118	113	108	103
474	124	119	114	109	104
484	126	121	116	111	106
494	127	122	117	112	107
504	129	124	119	114	109
514	131	126	121	116	111
524	132	127	122	117	112
534	134	129	124	119	114

349856-701 REV. -

Pressure (kPa)	Required Subcooling (°C)				
	3	6	8	11	14
1303	16	13	11	8	5
1351	17	15	12	9	6
1399	19	16	13	10	8
1448	20	17	14	11	9
1496	21	18	15	13	10
1544	22	19	16	14	11
1593	23	20	18	15	12
1641	24	21	19	16	13
1689	25	22	20	17	14
1737	26	23	21	18	15
1792	27	25	22	19	16
1848	29	26	23	20	17
1903	30	27	24	21	19
1958	31	28	25	22	20
2013	32	29	26	23	21
2068	33	30	27	24	22
2130	34	31	28	26	23
2192	35	32	29	27	24
2254	36	33	31	28	25
2316	37	34	32	29	26
2378	38	35	33	30	27
2440	39	36	34	31	28
2509	40	38	35	32	29
2578	41	39	36	33	30
2647	42	40	37	34	31
2716	44	41	38	35	32
2785	45	42	39	36	33
2854	46	43	40	37	34
2923	47	44	41	38	35
2992	48	45	42	39	36
3061	48	46	43	40	37
3130	49	47	44	41	38
3199	50	48	45	42	39
3268	51	48	46	43	40
3337	52	49	47	44	41
3406	53	50	47	45	42
3475	54	51	48	46	43
3544	55	52	49	46	44
3612	56	53	50	47	45
3681	56	54	51	48	45

A230122

Table 9 – Dry Coil Air Delivery - Horizontal and Downflow Discharge Sizes 24-60 208/230 VAC - 1,3 Phase**

Unit Size	Heating Rise °F (°C)	Motor Speed	Allowable Functions	Motor Speed Selection		ESP (in. W.C.)	0.1	0.2	0.3	0.4	0.5	0.6	0.7	0.8	0.9	1
24040	25 - 55 (14 - 31)	1	Continuous Fan*	SW2-5 OFF	SW2-6 OFF	CFM	712	625	531	440	344	208	NA	NA	NA	NA
			Dehumidification Low	SW1-7 OFF	SW1-8 OFF											
			Low Stage Cooling	SW1-3 OFF	SW1-4 OFF	BHP	0.09	0.10	0.10	0.10	0.11	0.11	NA	NA	NA	NA
		2	Continuous Fan	SW2-5 ON	SW2-6 OFF	CFM	512	460	344	212	NA	NA	NA	NA	NA	NA
			Dehumidification Low	SW1-7 ON	SW1-8 OFF											
			Low Stage Cooling	SW1-3 ON	SW1-4 OFF	BHP	0.06	0.06	0.07	0.07	NA	NA	NA	NA	NA	NA
		3	Dehumidification Low	SW1-7 OFF	SW1-8 ON	CFM	888	818	750	679	606	511	425	320	238	NA
			Low Stage Cooling	SW1-3 OFF	SW1-4 ON	BHP	0.18	0.18	0.19	0.19	0.20	0.20	0.21	0.21	0.22	NA
		4	Dehumidification Low	SW1-7 ON	SW1-8 ON	CFM	768	686	604	520	430	327	210	115	NA	NA
			Low Stage Cooling*	SW1-3 ON	SW1-4 ON	BHP	0.11	0.11	0.12	0.12	0.13	0.13	0.13	0.13	NA	NA
24040	25 - 55 (14 - 31)	5	Dehumidification High	SW1-5 OFF	SW1-6 OFF	CFM	900	824	753	680	604	528	446	344	240	130
			High Stage Cooling	SW1-1 OFF	SW1-2 OFF	BHP	0.15	0.15	0.16	0.17	0.17	0.18	0.18	0.19	0.19	0.19
			Heating*	SW2-1 OFF	SW2-2 OFF	Gas Heat Rise (°F)	37	41	44	49	55	NA	NA	NA	NA	NA
						Gas Heat Rise (°C)	21	23	25	27	31	NA	NA	NA	NA	NA
		6	Dehumidification High	SW1-5 ON	SW1-6 OFF	CFM	1063	994	929	866	803	741	673	610	528	453
			High Stage Cooling	SW1-1 ON	SW1-2 OFF	BHP	0.21	0.22	0.23	0.23	0.24	0.25	0.25	0.26	0.26	0.27
			Heating	SW2-1 ON	SW2-2 OFF	Gas Heat Rise (°F)	31	34	36	39	42	45	50	55	NA	NA
						Gas Heat Rise (°C)	17	19	20	21	23	25	28	30	NA	NA
		7	Dehumidification High	SW1-5 OFF	SW1-6 ON	CFM	956	883	817	747	676	604	529	450	348	241
			High Stage Cooling	SW1-1 OFF	SW1-2 ON	BHP	0.17	0.18	0.18	0.19	0.19	0.20	0.20	0.21	0.21	0.22
				SW2-1 OFF	SW2-2 ON	Gas Heat Rise (°F)	NA	NA	NA	NA	NA	NA	NA	NA	NA	NA
						Gas Heat Rise (°C)	NA	NA	NA	NA	NA	NA	NA	NA	NA	NA
		8	Dehumidification High	SW1-5 ON	SW1-6 ON	CFM	1122	1064	1003	943	882	820	758	697	632	567
			High Stage Cooling*	SW1-1 ON	SW1-2 ON	BHP	0.25	0.26	0.26	0.27	0.28	0.28	0.29	0.30	0.30	0.31
						Gas Heat Rise (°F)	NA	NA	NA	NA	NA	NA	NA	NA	NA	NA
			High Static Cooling	SW2-8 OFF		Gas Heat Rise (°C)	NA	NA	NA	NA	NA	NA	NA	NA	NA	NA
		9	High Static Cooling	SW2-8 ON		CFM	1369	1308	1255	1204	1152	1105	1052	999	909	806
						BHP	0.40	0.41	0.41	0.42	0.43	0.44	0.45	0.46	0.44	0.42

Manufacturer reserves the right to change, at any time, specifications and designs without notice and without obligations.

Table 9 – Dry Coil Air Delivery - Horizontal and Downflow Discharge Sizes 24-60 208/230 VAC - 1,3 Phase (Continued)**

Unit Size	Heating Rise °F (°C)	Motor Speed	Allowable Functions	Motor Speed Selection		ESP (in. W.C.)	0.1	0.2	0.3	0.4	0.5	0.6	0.7	0.8	0.9	1
24060	25 - 55 (14 - 31)	1	Continuous Fan*	SW2-5	SW2-6	CFM	712	625	531	440	344	208	NA	NA	NA	NA
				OFF	OFF											
			Dehumidification Low	SW1-7	SW1-8											
				OFF	OFF											
			Low Stage Cooling	SW1-3	SW1-4	BHP	0.09	0.10	0.10	0.10	0.11	0.11	NA	NA	NA	NA
				OFF	OFF											
		2				CFM	804	725	643	555	471	380	281	NA	NA	NA
			Dehumidification Low	SW1-7	SW1-8											
				ON	OFF											
			Low Stage Cooling	SW1-3	SW1-4	BHP	0.11	0.12	0.13	0.13	0.13	0.14	0.14	NA	NA	NA
				ON	OFF											
		3				CFM	956	883	817	747	676	604	529	450	348	241
			Dehumidification Low	SW1-7	SW1-8											
				OFF	ON											
			Low Stage Cooling	SW1-3	SW1-4	BHP	0.17	0.18	0.18	0.19	0.19	0.20	0.20	0.21	0.21	0.22
				OFF	ON											
		4				CFM	768	686	604	520	430	327	210	115	NA	NA
			Dehumidification Low	SW1-7	SW1-8											
				ON	ON											
			Low Stage Cooling*	SW1-3	SW1-4	BHP	0.11	0.11	0.12	0.12	0.13	0.13	0.13	0.13	NA	NA
				ON	ON											
24060	25 - 55 (14 - 31)	5	Dehumidification High	SW1-5	SW1-6	CFM	1122	1064	1003	943	882	820	758	697	632	567
				OFF	OFF											
			High Stage Cooling	SW1-1	SW1-2	BHP	0.25	0.26	0.26	0.27	0.28	0.28	0.29	0.30	0.30	0.31
				OFF	OFF											
			Heating*	SW2-1	SW2-2	Gas Heat Rise (°F)	40	42	45	47	51	54	NA	NA	NA	NA
				OFF	OFF	Gas Heat Rise (°C)	22	23	25	26	28	30	NA	NA	NA	NA
		6	Dehumidification High	SW1-5	SW1-6	CFM	956	883	817	747	676	604	529	450	348	241
				ON	OFF											
			High Stage Cooling	SW1-1	SW1-2	BHP	0.17	0.18	0.18	0.19	0.19	0.20	0.20	0.21	0.21	0.22
				ON	OFF											
			Heating	SW2-1	SW2-2	Gas Heat Rise (°F)	47	51	55	NA	NA	NA	NA	NA	NA	NA
				ON	OFF	Gas Heat Rise (°C)	26	28	30	NA	NA	NA	NA	NA	NA	NA
		7	Dehumidification High	SW1-5	SW1-6	CFM	1122	1064	1003	943	882	820	758	697	632	567
				OFF	ON											
			High Stage Cooling*	SW1-1	SW1-2	BHP	0.25	0.26	0.26	0.27	0.28	0.28	0.29	0.30	0.30	0.31
				OFF	ON											
				SW2-1	SW2-2	Gas Heat Rise (°F)	NA	NA	NA	NA	NA	NA	NA	NA	NA	NA
				OFF	ON	Gas Heat Rise (°C)	NA	NA	NA	NA	NA	NA	NA	NA	NA	NA
		8	Dehumidification High	SW1-5	SW1-6	CFM	1204	1146	1088	1031	977	919	860	802	744	682
				ON	ON											
			High Stage Cooling	SW1-1	SW1-2	BHP	0.29	0.30	0.31	0.31	0.32	0.33	0.34	0.34	0.35	0.36
				ON	ON											
				SW2-1	SW2-2	Gas Heat Rise (°F)	NA	NA	NA	NA	NA	NA	NA	NA	NA	NA
				ON	ON											
			High Static Cooling	SW2-8		Gas Heat Rise (°C)	NA	NA	NA	NA	NA	NA	NA	NA	NA	NA
				OFF												
		9	High Static Cooling	SW2-8		CFM	1369	1308	1255	1204	1152	1105	1052	999	909	806
				ON		BHP	0.40	0.41	0.41	0.42	0.43	0.44	0.45	0.46	0.44	0.42

Manufacturer reserves the right to change, at any time, specifications and designs without notice and without obligations.

Table 9 – Dry Coil Air Delivery - Horizontal and Downflow Discharge Sizes 24-60 208/230 VAC - 1,3 Phase (Continued)**

Unit Size	Heating Rise °F (°C)	Motor Speed	Allowable Functions	Motor Speed Selection			ESP (in. W.C.)									
							0.1	0.2	0.3	0.4	0.5	0.6	0.7	0.8	0.9	1
36060	25 - 55 (14 - 31)	1	Continuous Fan*	SW2-5	SW2-6	CFM	980	882	814	747	679	608	545	482	432	384
				OFF	OFF											
			Dehumidification Low	SW1-7	SW1-8											
				OFF	OFF											
			Low Stage Cooling	SW1-3	SW1-4	BHP	0.11	0.11	0.12	0.12	0.13	0.14	0.15	0.15	0.16	0.17
				OFF	OFF											
		2	Continuous Fan	SW2-5	SW2-6	CFM	956	801	727	655	580	507	448	391	340	288
				ON	OFF											
			Dehumidification Low	SW1-7	SW1-8											
				ON	OFF											
			Low Stage Cooling	SW1-3	SW1-4	BHP	0.11	0.09	0.10	0.11	0.12	0.12	0.13	0.14	0.14	0.15
				ON	OFF											
		3	Continuous Fan	SW2-5	SW2-6	CFM	1178	1123	1068	1011	955	900	842	782	725	668
				OFF	ON											
			Dehumidification Low	SW1-7	SW1-8											
				OFF	ON											
			Low Stage Cooling	SW1-3	SW1-4	BHP	0.16	0.17	0.18	0.19	0.20	0.21	0.22	0.23	0.24	0.25
				OFF	ON											
		4	Continuous Fan	SW2-5	SW2-6	CFM	1028	964	901	838	774	711	647	588	532	484
				ON	ON											
			Dehumidification Low	SW1-7	SW1-8											
				ON	ON											
			Low Stage Cooling*	SW1-3	SW1-4	BHP	0.12	0.13	0.14	0.15	0.15	0.16	0.17	0.18	0.19	0.19
				ON	ON											

Table 9 – Dry Coil Air Delivery - Horizontal and Downflow Discharge Sizes 24-60 208/230 VAC - 1,3 Phase (Continued)**

Unit Size	Heating Rise °F (°C)	Motor Speed	Allowable Functions	Motor Speed Selection			ESP (in. W.C.)									
							0.1	0.2	0.3	0.4	0.5	0.6	0.7	0.8	0.9	1
36060	25 - 55 (14 - 31)	5	Dehumidification High	SW1-5	SW1-6	CFM	1190	1134	1085	1025	972	915	861	804	746	692
				OFF	OFF											
			High Stage Cooling	SW1-1	SW1-2	BHP	0.17	0.18	0.19	0.20	0.21	0.22	0.22	0.23	0.24	0.25
				OFF	OFF											
			Heating*	SW2-1	SW2-2	Gas Heat Rise (°F)	38	39	41	44	46	49	52	NA	NA	NA
				OFF	OFF	Gas Heat Rise (°C)	21	22	23	24	26	27	29	NA	NA	NA
		6	Dehumidification High	SW1-5	SW1-6	CFM	1385	1323	1274	1223	1176	1130	1082	1032	979	928
				ON	OFF											
			High Stage Cooling	SW1-1	SW1-2	BHP	0.24	0.25	0.26	0.27	0.28	0.29	0.30	0.31	0.32	0.33
				ON	OFF											
			Heating	SW2-1	SW2-2	Gas Heat Rise (°F)	32	34	35	36	38	40	41	43	46	48
				ON	OFF	Gas Heat Rise (°C)	18	19	19	20	21	22	23	24	25	27
		7	Dehumidification High	SW1-5	SW1-6	CFM	1299	1246	1196	1146	1095	1043	990	937	886	825
				OFF	ON											
			High Stage Cooling	SW1-1	SW1-2	BHP	0.21	0.21	0.22	0.23	0.24	0.25	0.26	0.27	0.28	0.29
				OFF	ON											
				SW2-1	SW2-2	Gas Heat Rise (°F)	NA	NA	NA	NA	NA	NA	NA	NA	NA	NA
				OFF	ON	Gas Heat Rise (°C)	NA	NA	NA	NA	NA	NA	NA	NA	NA	NA
		8	Dehumidification High	SW1-5	SW1-6	CFM	1423	1377	1331	1288	1240	1192	1147	1097	1047	998
				ON	ON											
			High Stage Cooling*	SW1-1	SW1-2	BHP	0.26	0.27	0.28	0.29	0.30	0.32	0.33	0.34	0.35	0.36
				ON	ON											
						Gas Heat Rise (°F)	NA	NA	NA	NA	NA	NA	NA	NA	NA	NA
			High Static Cooling	SW2-8		Gas Heat Rise (°C)	NA	NA	NA	NA	NA	NA	NA	NA	NA	NA
				OFF												
		9	High Static Cooling	SW2-8		CFM	1511	1466	1420	1378	1338	1293	1245	1200	1156	1109
				ON		BHP	0.30	0.31	0.33	0.34	0.35	0.36	0.37	0.38	0.39	0.40

Manufacturer reserves the right to change, at any time, specifications and designs without notice and without obligations.

Table 9 – Dry Coil Air Delivery - Horizontal and Downflow Discharge Sizes 24-60 208/230 VAC - 1,3 Phase (Continued)**

Unit Size	Heating Rise °F (°C)	Motor Speed	Allowable Functions	Motor Speed Selection			ESP (in. W.C.)									
							0.1	0.2	0.3	0.4	0.5	0.6	0.7	0.8	0.9	1
48090	35 - 65 (19 - 36)	1	Continuous Fan*	SW2-5	SW2-6	CFM	923	812	741	677	614	549	494	444	387	338
				OFF	OFF											
			Dehumidification Low	SW1-7	SW1-8											
				OFF	OFF											
			Low Stage Cooling	SW1-3	SW1-4	BHP	0.10	0.10	0.11	0.11	0.12	0.13	0.14	0.14	0.15	0.16
				OFF	OFF											
		2	Continuous Fan	SW2-5	SW2-6	CFM	945	885	820	757	696	638	579	527	480	429
				ON	OFF											
			Dehumidification Low	SW1-7	SW1-8											
				ON	OFF											
			Low Stage Cooling	SW1-3	SW1-4	BHP	0.11	0.12	0.12	0.13	0.14	0.15	0.16	0.16	0.17	0.18
				ON	OFF											
		3	Continuous Fan	SW2-5	SW2-6	CFM	1102	1051	999	945	890	837	785	734	681	634
				OFF	ON											
			Dehumidification Low	SW1-7	SW1-8											
				OFF	ON											
			Low Stage Cooling	SW1-3	SW1-4	BHP	0.15	0.16	0.17	0.18	0.19	0.20	0.21	0.22	0.23	0.24
				OFF	ON											
		4	Continuous Fan	SW2-5	SW2-6	CFM	1297	1253	1207	1163	1115	1066	1018	974	931	888
				ON	ON											
			Dehumidification Low	SW1-7	SW1-8											
				ON	ON											
			Low Stage Cooling*	SW1-3	SW1-4	BHP	0.23	0.24	0.24	0.26	0.27	0.27	0.28	0.29	0.30	0.31
				ON	ON											

Manufacturer reserves the right to change, at any time, specifications and designs without notice and without obligations.

Table 9 – Dry Coil Air Delivery - Horizontal and Downflow Discharge Sizes 24-60 208/230 VAC - 1,3 Phase (Continued)**

Unit Size	Heating Rise °F (°C)	Motor Speed	Allowable Functions	Motor Speed Selection			ESP (in. W.C.)									
							0.1	0.2	0.3	0.4	0.5	0.6	0.7	0.8	0.9	1
48090	35 - 65 (19 - 36)	5	Dehumidification High	SW1-5	SW1-6	CFM	1383	1339	1296	1254	1209	1163	1119	1076	1033	989
				OFF	OFF											
			High Stage Cooling	SW1-1	SW1-2	BHP	0.26	0.27	0.28	0.30	0.31	0.32	0.33	0.34	0.35	0.36
				OFF	OFF											
			Heating*	SW2-1	SW2-2	Gas Heat Rise (°F)	48	49	51	53	55	57	59	62	64	NA
				OFF	OFF	Gas Heat Rise (°C)	27	27	28	29	30	32	33	34	36	NA
		6	Dehumidification High	SW1-5	SW1-6	CFM	1550	1511	1473	1434	1399	1362	1319	1278	1238	1202
				ON	OFF											
			High Stage Cooling	SW1-1	SW1-2	BHP	0.36	0.37	0.38	0.39	0.40	0.41	0.42	0.44	0.45	0.46
				ON	OFF											
			Heating	SW2-1	SW2-2	Gas Heat Rise (°F)	43	44	45	47	48	49	51	52	54	56
				ON	OFF	Gas Heat Rise (°C)	24	25	25	26	27	27	28	29	30	31
		7	Dehumidification High	SW1-5	SW1-6	CFM	1676	1638	1604	1567	1532	1497	1460	1420	1383	1345
				OFF	ON											
			High Stage Cooling	SW1-1	SW1-2	BHP	0.43	0.44	0.45	0.47	0.48	0.49	0.50	0.51	0.53	0.54
				OFF	ON											
						Gas Heat Rise (°F)	NA	NA	NA	NA	NA	NA	NA	NA	NA	NA
						Gas Heat Rise (°C)	NA	NA	NA	NA	NA	NA	NA	NA	NA	NA
		8	Dehumidification High	SW1-5	SW1-6	CFM	1733	1697	1662	1628	1593	1606	1571	1536	1499	1464
				ON	ON											
			High Stage Cooling*	SW1-1	SW1-2	BHP	0.47	0.48	0.50	0.51	0.52	0.57	0.58	0.59	0.60	0.62
				ON	ON											
						Gas Heat Rise (°F)	NA	NA	NA	NA	NA	NA	NA	NA	NA	NA
			High Static Cooling	SW2-8		Gas Heat Rise (°C)	NA	NA	NA	NA	NA	NA	NA	NA	NA	NA
				OFF												
		9	High Static Cooling	SW2-8		CFM	1842	1810	1773	1741	1710	1678	1645	1606	1570	1532
				ON		BHP	0.57	0.58	0.60	0.61	0.62	0.64	0.65	0.66	0.67	0.69

Table 9 – Dry Coil Air Delivery - Horizontal and Downflow Discharge Sizes 24-60 208/230 VAC - 1,3 Phase (Continued)**

Unit Size	Heating Rise °F (°C)	Motor Speed	Allowable Functions	Motor Speed Selection			ESP (in. W.C.)									
							0.1	0.2	0.3	0.4	0.5	0.6	0.7	0.8	0.9	1
60090	35 - 65 (19 - 36)	1	Continuous Fan*	SW2-5	SW2-6	CFM	923	812	741	677	614	549	494	444	387	338
				OFF	OFF											
			Dehumidification Low	SW1-7	SW1-8											
				OFF	OFF											
			Low Stage Cooling	SW1-3	SW1-4	BHP	0.10	0.10	0.11	0.11	0.12	0.13	0.14	0.14	0.15	0.16
				OFF	OFF											
		2	Continuous Fan	SW2-5	SW2-6	CFM	945	885	820	757	696	638	579	527	480	429
				ON	OFF											
			Dehumidification Low	SW1-7	SW1-8											
				ON	OFF											
			Low Stage Cooling	SW1-3	SW1-4	BHP	0.11	0.12	0.12	0.13	0.14	0.15	0.16	0.16	0.17	0.18
				ON	OFF											
		3	Continuous Fan	SW2-5	SW2-6	CFM	1102	1051	999	945	890	837	785	734	681	634
				OFF	ON											
			Dehumidification Low	SW1-7	SW1-8											
				OFF	ON											
			Low Stage Cooling	SW1-3	SW1-4	BHP	0.15	0.16	0.17	0.18	0.19	0.20	0.21	0.22	0.23	0.24
				OFF	ON											
		4	Continuous Fan	SW2-5	SW2-6	CFM	1297	1253	1207	1163	1115	1066	1018	974	931	888
				ON	ON											
			Dehumidification Low	SW1-7	SW1-8											
				ON	ON											
			Low Stage Cooling*	SW1-3	SW1-4	BHP	0.23	0.24	0.24	0.26	0.27	0.27	0.28	0.29	0.30	0.31
				ON	ON											

Manufacturer reserves the right to change, at any time, specifications and designs without notice and without obligations.

Table 9 – Dry Coil Air Delivery - Horizontal and Downflow Discharge Sizes 24-60 208/230 VAC - 1,3 Phase (Continued)**

Unit Size	Heating Rise °F (°C)	Motor Speed	Allowable Functions	Motor Speed Selection			ESP (in. W.C.)									
							0.1	0.2	0.3	0.4	0.5	0.6	0.7	0.8	0.9	1
60090	35 - 65 (19 - 36)	5	Dehumidification High	SW1-5	SW1-6	CFM	1383	1339	1296	1254	1209	1163	1119	1076	1033	989
				OFF	OFF											
			High Stage Cooling	SW1-1	SW1-2	BHP	0.26	0.27	0.28	0.30	0.31	0.32	0.33	0.34	0.35	0.36
				OFF	OFF											
			Heating*	SW2-1	SW2-2	Gas Heat Rise (°F)	48	49	51	53	55	57	59	62	64	NA
				OFF	OFF	Gas Heat Rise (°C)	27	27	28	29	30	32	33	34	36	NA
		6	Dehumidification High	SW1-5	SW1-6	CFM	1550	1511	1473	1434	1399	1362	1319	1278	1238	1202
				ON	OFF											
			High Stage Cooling	SW1-1	SW1-2	BHP	0.36	0.37	0.38	0.39	0.40	0.41	0.42	0.44	0.45	0.46
				ON	OFF											
			Heating	SW2-1	SW2-2	Gas Heat Rise (°F)	43	44	45	46	47	49	50	52	53	55
				ON	OFF	Gas Heat Rise (°C)	24	24	25	26	26	27	28	29	30	31
		7	Dehumidification High	SW1-5	SW1-6	CFM	1818	1783	1751	1718	1685	1652	1619	1584	1548	1512
				OFF	ON											
			High Stage Cooling	SW1-1	SW1-2	BHP	0.54	0.55	0.56	0.58	0.59	0.60	0.62	0.63	0.64	0.65
				OFF	ON											
						Gas Heat Rise (°F)	NA	NA	NA	NA	NA	NA	NA	NA	NA	NA
						Gas Heat Rise (°C)	NA	NA	NA	NA	NA	NA	NA	NA	NA	NA
		8	Dehumidification High	SW1-5	SW1-6	CFM	1914	1881	1849	1817	1785	1755	1723	1693	1659	1618
				ON	ON											
			High Stage Cooling	SW1-1	SW1-2	BHP	0.62	0.63	0.65	0.66	0.67	0.69	0.70	0.71	0.73	0.74
				ON	ON											
						Gas Heat Rise (°F)	NA	NA	NA	NA	NA	NA	NA	NA	NA	NA
			High Static Cooling*	SW2-8		Gas Heat Rise (°C)	NA	NA	NA	NA	NA	NA	NA	NA	NA	NA
				OFF												
		9	High Static Cooling	SW2-8		CFM	1966	1933	1903	1872	1842	1811	1782	1751	1718	1619
				ON		BHP	0.67	0.68	0.70	0.71	0.73	0.74	0.75	0.77	0.78	0.74

Shaded areas indicate speed/static combinations that are permitted for dehumidification speed

Notes:
* - Factory Set Function
** - Deduct field-supplied air filter pressure drop and wet coil pressure drop to obtain external static pressure available for ducting
"NA" = Not Allowed for particular heating speed

Table 10 – Wet Coil Pressure Drop (IN. W.C.)

Unit Size	Standard CFM (SCFM)																	
	500	600	700	800	900	1000	1100	1200	1300	1400	1500	1600	1700	1800	1900	2000	2100	2200
24	0.02	0.03	0.04	0.04	0.05	0.06												
36				0.03	0.04	0.05	0.05	0.06	0.07	0.08	0.08	0.09	0.10	0.11				
48						0.03	0.04	0.04	0.05	0.06	0.06	0.07	0.08	0.09	0.10	0.11	0.12	0.13
60						0.03	0.04	0.04	0.05	0.06	0.06	0.07	0.08	0.09	0.10	0.11	0.12	0.13

Table 11 – Economizer with 1-in. Filter Pressure Drop (IN. W.C.)

Filter Size in. (mm)	Cooling Tons	Standard CFM (SCFM)																	
		500	600	700	800	900	1000	1100	1200	1300	1400	1500	1600	1700	1800	1900	2000	2100	2200
600-1400 CFM 12x20x1+12x20x1 (305x508x25+305x508x25)	2.0	0.04	0.05	0.07	0.09	0.14	0.16	0.18	0.25	-	-	-	-	-	-	-	-	-	-
1200-1800 CFM 16x24x1+14x24x1 (406x610x25+356x610x25)	3.0	-	-	-	0.04	0.06	0.07	0.08	0.10	0.11	0.12	0.13	0.14	0.16	0.16	-	-	-	-
1500-2200 CFM 16x24x1+18x24x1 (406x610x25+457x610x25)	4.0	-	-	-	-	-	-	0.08	0.10	0.11	0.13	0.15	0.17	0.18	0.20	0.21	0.22	-	-
1500-2200 CFM 16x24x1+18x24x1 (406x610x25+457x610x25)	5.0	-	-	-	-	-	-	0.08	0.10	0.11	0.13	0.15	0.17	0.18	0.20	0.21	0.22	0.23	0.23

Table 12 – Filter Pressure Drop Table (IN. W.C.)

Filter Size in. (mm)	Cooling Tons	Standard CFM (SCFM)																	
		500	600	700	800	900	1000	1100	1200	1300	1400	1500	1600	1700	1800	1900	2000	2100	2200
600-1400 CFM 12x20x1+12x20x1 (305x508x25+305x508x25)	2.0	0.02	0.03	0.05	0.06	0.08	0.10	0.11	0.13	-	-	-	-	-	-	-	-	-	-
1200-1800 CFM 16x24x1+14x24x1 (406x610x25+356x610x25)	3.0	-	-	-	0.03	0.03	0.04	0.05	0.06	0.07	0.08	0.09	0.09	0.10	0.11	-	-	-	-
1500-2200 CFM 16x24x1+18x24x1 (406x610x25+457x610x25)	4.0	-	-	-	-	-	-	0.02	0.03	0.03	0.04	0.04	0.06	0.08	0.10	0.11	0.13	-	-
1500-2200 CFM 16x24x1+18x24x1 (406x610x25+457x610x25)	5.0	-	-	-	-	-	-	0.02	0.03	0.03	0.04	0.04	0.06	0.08	0.10	0.11	0.13	0.14	0.15

Maintenance

To ensure continuing high performance and to minimize the possibility of premature equipment failure, periodic maintenance must be performed on this equipment. This unit should be inspected at least once each year by a qualified service person. To troubleshoot unit, refer to Table 13 - Table 15, Troubleshooting Chart.

NOTE TO EQUIPMENT OWNER: Consult your local dealer about the availability of a maintenance contract.

⚠ WARNING

PERSONAL INJURY AND UNIT DAMAGE HAZARD

Failure to follow this warning could result in personal injury or death and unit component damage.

The ability to properly perform maintenance on this equipment requires certain expertise, mechanical skills, tools and equipment. If you do not possess these, do not attempt to perform any maintenance on this equipment, other than those procedures recommended in the Owner's Manual.

⚠ WARNING

ELECTRICAL SHOCK HAZARD

Failure to follow these warnings could result in personal injury or death:

1. Turn off electrical power to the unit and install lock out tag before performing any maintenance or service on this unit.
2. Use extreme caution when removing panels and parts.
3. Never place anything combustible either on or in contact with the unit.

⚠ CAUTION

UNIT OPERATION HAZARD

Failure to follow this caution may result in improper operation.

Errors made when reconnecting wires may cause improper and dangerous operation. Label all wires prior to disconnecting when servicing.

⚠ WARNING

ENVIRONMENTAL HAZARD

Failure to follow this caution may result in environmental pollution.

Remove and re-cycle all components or materials (i.e. oil, refrigerant, etc) before unit final disposal.

The minimum maintenance requirements for this equipment are as follows:

1. Inspect air filter(s) each month. Clean or replace when necessary.
2. Inspect indoor coil, drain pan, and condensate drain each cooling season for cleanliness. Clean when necessary.
3. Inspect blower motor and wheel for cleanliness at the beginning of each heating and cooling season. Clean when necessary. For first heating and cooling season, inspect blower wheel bi-monthly to determine proper cleaning frequency.
4. Check electrical connections for tightness and controls for proper operation each heating and cooling season. Service when necessary.
5. Ensure electric wires are not in contact with refrigerant tubing or sharp metal edges.
6. Check and inspect heating section before each heating season. Clean and adjust when necessary.
7. Check flue hood and remove any obstructions, if necessary.

Air Filter

IMPORTANT: Never operate the unit without a suitable air filter in the return-air duct system. Always replace the filter with the same dimensional size and type as originally installed. See Table 1 for recommended filter sizes.

Inspect air filter(s) at least once each month and replace (throwaway-type) or clean (cleanable-type) at least twice during each cooling season and twice during the heating season, or whenever the filter becomes clogged with dust and lint.

Indoor Blower and Motor

NOTE: All motors are pre-lubricated. Do not attempt to lubricate these motors.

For longer life, operating economy, and continuing efficiency, clean accumulated dirt and grease from the blower wheel and motor annually.

⚠ WARNING

ELECTRICAL SHOCK HAZARD

Failure to follow this warning could result in personal injury or death.

Disconnect and tag electrical power to the unit before cleaning the blower motor and wheel.

To clean the blower motor and wheel:

1. Remove and disassemble blower assembly as follows:
   a. Remove blower access panel (see Fig. 22).
   b. Disconnect 5 pin plug and 4 pin plug from indoor blower motor. Remove capacitor if required.
   c. On all units remove blower assembly from unit. Remove screws securing blower to blower partition and slide assembly out. Be careful not to tear insulation in blower compartment.
   d. Ensure proper reassembly by marking blower wheel and motor in relation to blower housing before disassembly.
   e. Loosen setscrew(s) that secures wheel to motor shaft, remove screws that secure motor mount brackets to housing, and slide motor and motor mount out of housing.
2. Remove and clean blower wheel as follows:
   a. Ensure proper reassembly by marking wheel orientation.
   b. Lift wheel from housing. When handling and/or cleaning blower wheel, be sure not to disturb balance weights (clips) on blower wheel vanes.
   c. Remove caked-on dirt from wheel and housing with a brush. Remove lint and/or dirt accumulations from wheel and housing with vacuum cleaner, using soft brush attachment. Remove grease and oil with mild solvent.
   d. Reassemble wheel into housing.
   e. Reassemble motor into housing. Be sure setscrews are tightened on motor shaft flats and not on round part of shaft. Reinstall blower into unit. Reinstall capacitor.
   f. Connect 5 pin plug and 4 pin plug to indoor blower motor.
   g. Reinstall blower access panel (see Fig. 22).
3. Restore electrical power to unit. Start unit and check for proper blower rotation and motor speeds during heating and cooling cycles.

Induced Draft (combustion air) Blower Assembly

The induced-draft blower assembly consists of the inducer motor, the blower housing, and the induced-draft blower wheel.

Clean the inducer wheel periodically to assure proper airflow and heating efficiency. Inspect blower wheel every fall before the heating season.

To inspect blower wheel:

1. Shut off power to the unit and close the manual shut off valve on the gas supply line to the unit.
2. Remove 2 screws holding the flue hood (Fig. 20) and remove the flue hood.
3. Remove flue baffle using a 5/16-in. ratchet to remove the 2 screws, being careful not to drop the 2 screws into the inducer housing.
4. Wearing gloves, inspect the inducer wheel blades for cleanliness by slowly spinning the wheel down using a screwdriver and observing with a flashlight. If debris is evident on the blades, take a small vacuum hose to the blades. Once you have cleaned 40 blades, the process is complete.

NOTE: If a more thorough cleaning is required, refer to Service Manual for removal of induced-draft blower assembly.

5. Re-connect the flue baffle using the 2 screws and 5/16-in. ratchet, being careful not to drop the screws into the housing.
6. Re-connect flue hood (Fig. 20) using the 2 screws removed.
7. Turn power back onto unit and open gas supply shutoff valve.

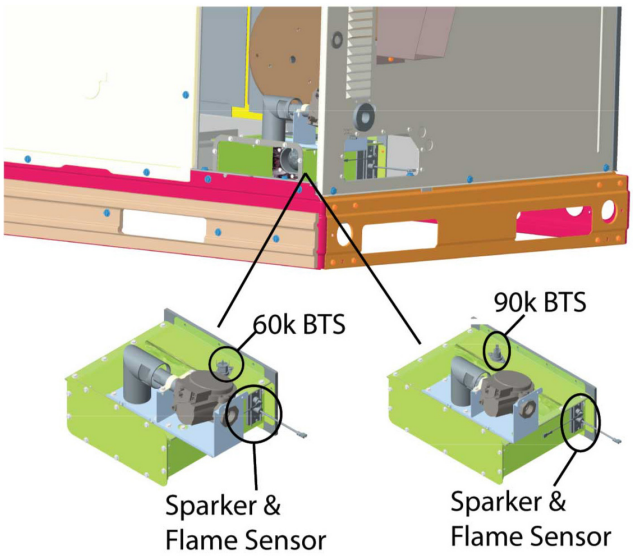

Fig. 20 – Burner Thermal Switch (BTS) (Ultra Low NOx)

Flue Gas Passageways

To inspect the flue collector box and upper areas of the heat exchanger:

1. Remove the induced draft blower assembly according to directions in the Service Manual.
2. Remove the 11 screws holding the flue collector box cover (see Fig. 21) to the heat exchanger assembly. Inspect the heat exchangers.
3. Clean all surfaces, as required, using a wire brush.

Limit Switch

Remove blower access panel (see Fig. 22). Limit switch(es) are located on the fan partition.

Burner Ignition

Unit is equipped with a direct spark ignition 100 percent lockout system. Ignition module (IGC) is located in the control box (See Fig. 21). Module contains a self-diagnostic LED. During servicing, refer to label diagram or Table 7 in these instructions for LED interpretation.

If lockout occurs, unit may be reset by either momentarily interrupting power supply to unit or by turning selector switch to OFF position at the thermostat.

NOTE: For Ultra Low NOx The combined flame sensor/sparker is located on the right side of the burner box (See Fig. 20). The flame sensor/sparker is accessible for service by removing the cover in the right side panel. The burner thermal switch (BTS) is located on the top of the burner box. For 60k heat sizes, the BTS switch is accessible through the cover in the right side panel. For 90k heat sizes, the BTS switch is accessible by removing the control access panel.

Ultra Low NOx Burner Baffle Inspection/Cleaning (See Fig. 21.)

If the inlet side of the burner is required to be inspected and cleaned for trouble shooting, the design allow accessing the burner without removing the burner box from the heat exchanger assembly. This can be done by removing the screws from the front cover of the burner box and losing the screws on each side of the top cover to allow easy removal of baffle from the burner box. Once the baffle is removed the inlet side of the burner can be accessed and cleaned.

NOTE: This is NOT recommended to perform on yearly maintenance inspections, only allowed for trouble shooting the burner box assembly for any blockage.

NOTE: Burner/heat exchanger assembly

Due to the design, and to prevent damage to components, this is considered as one assembly and cannot be disassembled. This assembly is available to order though Replacement Components.

⚠ WARNING

FIRE, EXPLOSION HAZARD

Failure to follow this warning could result in personal injury, death or property damage.

Do not purge gas supply into the combustion chamber. Do not use a match or other open flame to check for gas leaks.

Use a commercially available soap solution made specifically for the detection of leaks to check all connections. A fire or explosion may result causing property damage, personal injury or loss of life.

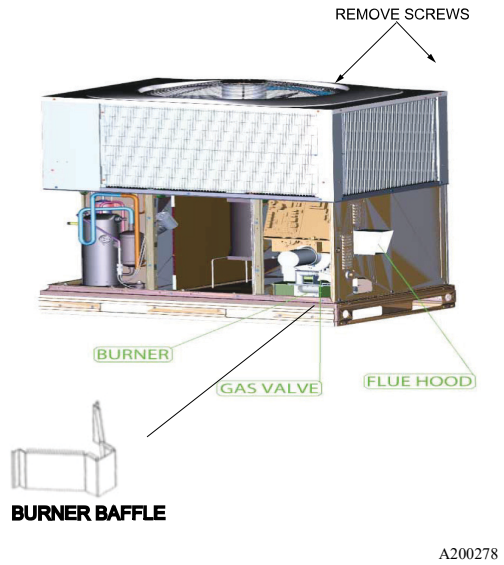

Ultra Low NOx

Fig. 21 – Blower Housing and Flue Collector Box

Outdoor Coil, Indoor Coil, and Condensate Drain Pan

Inspect the condenser coil, evaporator coil, and condensate drain pan at least once each year.

The coils are easily cleaned when dry; therefore, inspect and clean the coils either before or after each cooling season. Remove all obstructions, including weeds and shrubs, that interfere with the airflow through the condenser coil.

Straighten bent fins with a fin comb. If coated with dirt or lint, clean the coils with a vacuum cleaner, using the soft brush attachment. Be careful not to bend the fins. If coated with oil or grease, clean the coils with a mild detergent and water solution. Rinse coils with clear water, using a garden hose. Be careful not to splash water on motors, insulation, wiring, or air filter(s). For best results, spray condenser coil fins from inside to outside the unit. On units with an outer and inner condenser coil, be sure to clean between the coils. Be sure to flush all dirt and debris from the unit base.

Inspect the drain pan and condensate drain line when inspecting the coils. Clean the drain pan and condensate drain by removing all foreign matter from the pan. Flush the pan and drain trough with clear water. Do not splash water on the insulation, motor, wiring, or air filter(s). If the drain trough is restricted, clear it with a “plumbers snake” or similar probe device.

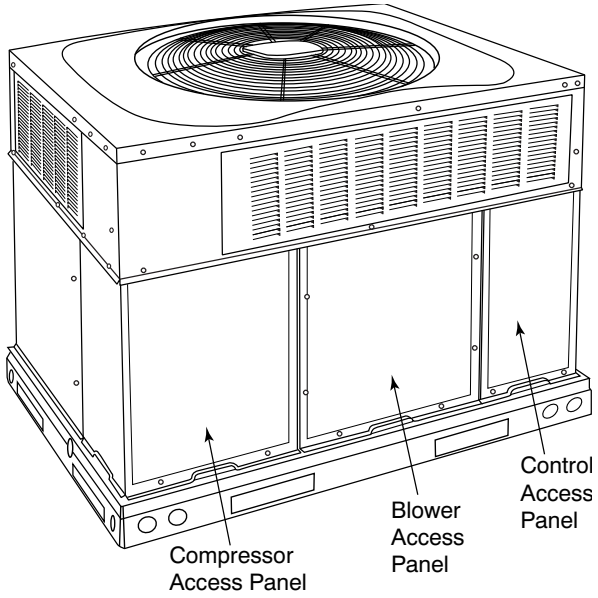

A09211

Fig. 22 – Unit Access Panels

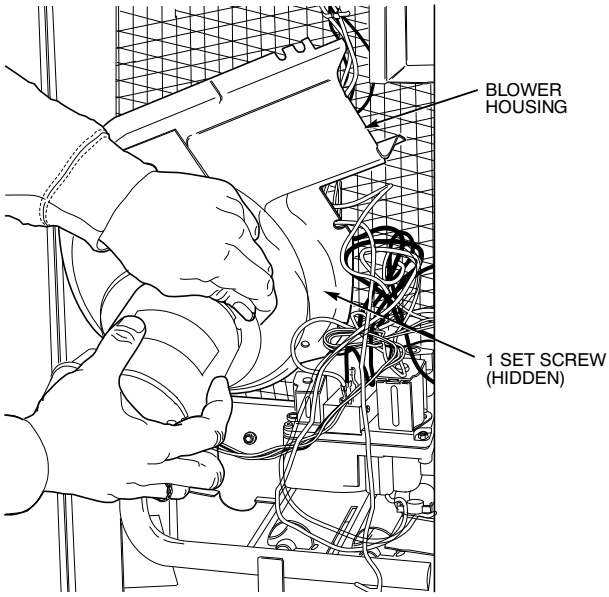

A200292

Fig. 23 – Removal of Motor and Blower Wheel

Outdoor Fan

⚠ CAUTION

UNIT OPERATION HAZARD

Failure to follow this caution may result in damage to unit components. Keep the condenser fan free from all obstructions to ensure proper cooling operation. Never place articles on top of the unit.

1. Remove 6 screws holding outdoor grille and motor to top cover.
2. Turn motor/grille assembly upside down on top cover to expose fan blade.
3. Inspect the fan blades for cracks or bends.
4. If fan needs to be removed, loosen setscrew and slide fan off motor shaft.
5. When replacing fan blade, position blade as shown in Fig. 24.
6. Ensure that setscrew engages the flat area on the motor shaft when tightening.
7. Replace grille.

Electrical Controls and Wiring

Inspect and check the electrical controls and wiring annually. Be sure to turn off the electrical power to the unit.

Remove access panels (see Fig. 22) to locate all the electrical controls and wiring. Check all electrical connections for tightness. Tighten all screw connections. If any smoky or burned connections are noticed, disassemble the connection, clean all the parts, re-strip the wire end and reassemble the connection properly and securely.

After inspecting the electrical controls and wiring, replace all the panels. Start the unit, and observe at least one complete cooling cycle to ensure proper operation. If discrepancies are observed in operating cycle, or if a suspected malfunction has occurred, check each electrical component with the proper electrical instrumentation. Refer to the unit wiring label when making these checks.

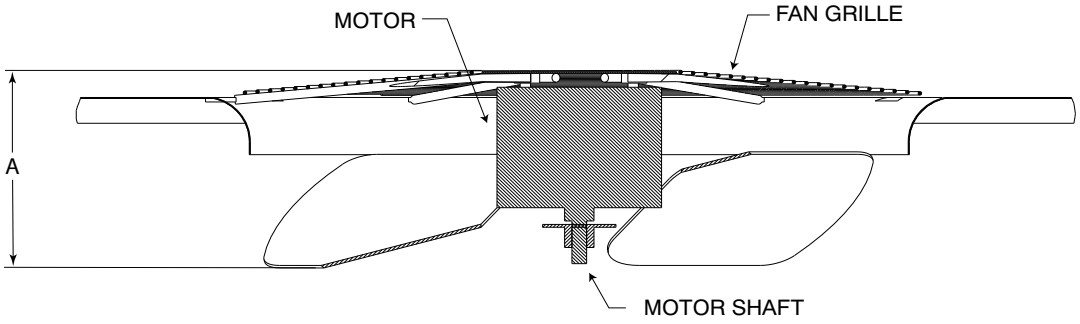

A08505

MAX DISTANCE BETWEEN TOP OF FAN GRILLE AND BOTTOM OF FAN BLADE

Size	"A"	
	IN.	mm
24	9.5	241
36	7.6	193
48	7.6	193
60	7.6	193

Fig. 24 – Fan Blade Position

Refrigerant Circuit

Annually inspect all refrigerant tubing connections and the unit base for oil accumulations.

WARNING

EXPLOSION, SAFETY AND ENVIRONMENTAL HAZARD

Failure to follow this warning could result in personal injury, death or property damage.

System under pressure. Relieve pressure and recover all refrigerant before system repair or final unit disposal. Use all service ports and open all flow-control devices, including solenoid valves.

If low cooling performance is suspected, leak-test all refrigerant tubing using an electronic leak-detector, halide torch, or liquid-soap solution. If a refrigerant leak is detected, refer to the Check for Refrigerant Leaks section.

If no refrigerant leaks are found and low cooling performance is suspected, refer to the Checking and Adjusting Refrigerant Charge section.

Gas Input

The gas input does not require checking unless improper heating performance is suspected. If a problem exists, refer to the Start-Up section.

Evaporator Airflow

The heating and/or cooling airflow does not require checking unless improper performance is suspected. If a problem exists, be sure that all supply- and return-air grilles are open and free from obstructions, and that the air filter is clean. When necessary, refer to the Indoor Airflow and Airflow Adjustments section to check the system airflow.

Puron (R-410A) Items

Metering Device (Thermostatic Expansion Valve)

This metering device is a hard shutoff, balance port TXV. The TXV maintains a constant superheat at the evaporator exit resulting in higher overall system efficiency.

Pressure Switches

Pressure switches are protective devices wired into control circuit (low voltage). They shut off compressor if abnormally high or low pressures are present in the refrigeration circuit. These pressure switches are specifically designed to operate with Puron (R-410A) systems. R-22 pressure switches must not be used as replacements for the Puron (R-410A) system.

Loss of Charge Switch

This switch is located on the liquid line and protects against low suction pressures caused by such events as loss of charge, low airflow across indoor coil, dirty filters, etc. It opens on a pressure drop at about 20 psig. If system pressure is above this, switch should be closed. To check switch:

1. Turn off all power to unit.
2. Disconnect leads on switch.
3. Apply ohm meter leads across switch. You should have continuity on a good switch.

NOTE: Because these switches are attached to refrigeration system under pressure, it is not advisable to remove this device for troubleshooting unless you are reasonably certain that a problem exists. If switch must be removed, remove and recover all system charge so that pressure gauges read 0 psig. Never open system without breaking vacuum with dry nitrogen.

High-Pressure Switch

The high-pressure switch is located in the discharge line and protects against excessive condenser coil pressure. It opens at 650 psig.

High pressure may be caused by a dirty outdoor coil, failed fan motor, or outdoor air recirculation. To check switch:

1. Turn off all power to unit.
2. Disconnect leads on switch.
3. Apply ohm meter leads across switch. You should have continuity on a good switch.

Copeland Scroll Compressor (Puron [R-410A] Refrigerant)

The compressor used in this product is specifically designed to operate with Puron (R-410A) refrigerant and cannot be interchanged.

The compressor is an electrical (as well as mechanical) device. Exercise extreme caution when working near compressors. Power should be shut off, if possible, for most troubleshooting techniques. Refrigerants present additional safety hazards.

⚠ WARNING

FIRE/EXPLOSION HAZARD

Failure to follow this warning could result in personal injury or death and/or property damage.

Wear safety glasses and gloves when handling refrigerants. Keep torches and other ignition sources away from refrigerants and oils.

The scroll compressor pumps refrigerant throughout the system by the interaction of a stationary and an orbiting scroll. The scroll compressor has no dynamic suction or discharge valves, and it is more tolerant of stresses caused by debris, liquid slugging, and flooded starts. The compressor is equipped with a noise reducing shutdown device and an internal pressure relief port. The pressure relief port is a safety device, designed to protect against extreme high pressure. The relief port has an operating range between 550 (26.34 kPa) and 625 psig (29.93 kPa) differential pressure.

⚠ WARNING

EXPLOSION, ENVIRONMENTAL SAFETY HAZARD

Failure to follow this warning could result in personal injury, death or equipment damage.

This system uses Puron (R-410A) refrigerant which has higher operating pressures than R-22 and other refrigerants. No other refrigerant may be used in this system. Gauge set, hoses, and recovery system must be designed to handle Puron (R-410A). If you are unsure, consult the equipment manufacturer.

Refrigerant System

This information covers the refrigerant system including the compressor oil needed, servicing systems on roofs containing synthetic materials, the filter drier and refrigerant charging.

Compressor Oil

The Copeland scroll compressor uses 3MAF POE oil. If additional oil is needed, use Uniqema RL32-3MAF. If this oil is not available, use Copeland Ultra 32 CC or Mobil Arctic EAL22 CC. This oil is extremely hygroscopic, meaning it absorbs water readily. POE oils can absorb 15 times as much water as other oils designed for HCFC and CFC refrigerants. Take all necessary precautions to avoid exposure of the oil to the atmosphere.

Servicing Systems on Roofs with Synthetic Materials

POE (polyolester) compressor lubricants are known to cause long term damage to some synthetic roofing materials.

Exposure, even if immediately cleaned up, may cause embrittlement (leading to cracking) to occur in one year or more. When performing any service that may risk exposure of compressor oil to the roof, take appropriate precautions to protect roofing. Procedures which risk oil leakage include, but are not limited to, compressor replacement, repairing refrigerant leaks, replacing refrigerant components such as filter drier, pressure switch, metering device, coil, accumulator, or reversing valve.

Synthetic Roof Precautionary Procedure

1. Cover extended roof working area with an impermeable polyethylene (plastic) drip cloth or tarp. Cover an approximate 10 X 10 ft. (3.1 m X 3.1 m) area.
2. Cover area in front of the unit service panel with a terry cloth shop towel to absorb lubricant spills and prevent run-offs, and protect drop cloth from tears caused by tools or components.
3. Place terry cloth shop towel inside unit immediately under component(s) to be serviced and prevent lubricant run-offs through the louvered openings in the unit base.
4. Perform required service.
5. Remove and dispose of any oil contaminated material per local codes.

Liquid Line Filter Drier

This filter drier is specifically designed to operate with Puron (R-410A). Use only factory-authorized components. Filter drier must be replaced whenever the refrigerant system is opened. When removing a filter drier, use a tubing cutter to cut the drier from the system. Do not unsweat a filter drier from the system. Heat from unsweating will release moisture and contaminants from drier into system.

Puron (R-410A) Refrigerant Charging

Refer to unit information plate and charging chart. Some R-410A refrigerant cylinders contain a dip tube to allow liquid refrigerant to flow from cylinder in upright position. For cylinders equipped with a dip tube, charge Puron (R-410A) units with cylinder in upright position and a commercial metering device in manifold hose. Charge refrigerant into suction-line.

Troubleshooting

Use the Troubleshooting Guides (See Table 13 - Table 15) if problems occur with these units.

Start-up Checklist

Use Start-Up checklist to ensure proper start-up procedures are followed.

Table 13 – Troubleshooting Chart

SYMPTOM	CAUSE	REMEDY
Compressor and condenser fan will not start.	Power failure	Call power company
	Fuse blown or circuit breaker tripped	Replace fuse or reset circuit breaker
	Defective contactor, transformer, or high-pressure, loss-of-charge or low-pressure switch	Replace component
	Insufficient line voltage	Determine cause and correct
	Incorrect or faulty wiring	Check wiring diagram and rewire correctly
	Thermostat setting too high	Lower thermostat temperature setting below room temperature
Compressor will not start but condenser fan runs	Faulty wiring or loose connections in compressor circuit	Check wiring and repair or replace
	Compressor motor burned out, seized, or	Determine cause
	internal overload open	Replace compressor
	Defective run/start capacitor, overload, start relay	Determine cause and replace
	One leg of 3-phase power dead	Replace fuse or reset circuit breaker Determine cause
	Low input voltage	Determine cause and correct
Three-phase scroll compressor makes excessive noise, and there may be a low pressure differential.	Scroll compressor is rotating in the wrong direction	Correct the direction of rotation by reversing the 3-phase power leads to the unit. Shut down unit to allow pressures to equalize.
Compressor cycles (other than normally satisfying thermostat)	Refrigerant overcharge or undercharge	Recover refrigerant, evacuate system, and recharge to capacities shown on rating plate
	Defective compressor	Replace and determine cause
	Insufficient line voltage	Determine cause and correct
	Blocked outdoor coil	Determine cause and correct
	Defective run/start capacitor	Determine cause and replace
	Faulty outdoor fan motor or capacitor	Replace
	Restriction in refrigerant system	Locate restriction and remove
Compressor operates continuously	Dirty air filter	Replace filter
	Unit undersized for load	Decrease load or increase unit size
	Thermostat temperature set too low	Reset thermostat
	Low refrigerant charge	Locate leak, repair, and recharge
	Air in system	Recover refrigerant, evacuate system, and recharge
	Outdoor coil dirty or restricted	Clean coil or remove restriction
Excessive head pressure	Dirty air filter	Replace filter
	Dirty condenser coil	Clean coil
	Refrigerant overcharged	Recover excess refrigerant
	Air in system	Recover refrigerant, evacuate system, and recharge
	Condenser air restricted or air short-cycling	Determine cause and correct
Head pressure too low	Low refrigerant charge	Check for leaks, repair, and recharge.
	Restriction in liquid tube	Remove restriction
Excessive suction pressure	Refrigerant overcharged	Recover excess refrigerant
Suction pressure too low	Dirty air filter	Replace filter
	Low refrigerant charge	Check for leaks, repair and recharge
	Metering device or low side restricted	Remove source of restriction
	Insufficient evaporator airflow	Increase air quantity Check filter–replace if necessary
	Temperature too low in conditioned area	Reset thermostat
	Outdoor ambient below 55°F (13°C)	Install low-ambient kit
	Filter drier restricted	Replace filter

Table 14 – Troubleshooting Guide–Heating

SYMPTOM	CAUSE	REMEDY
Burners will not ignite	Water in gas line	Drain. Install drip leg.
	No power to furnace	Check power supply fuses, wiring or circuit breaker.
	No 24-v power supply to control circuit	Check transformer. NOTE: Some transformers have internal over-current protection that requires a cool-down period to reset.
	Mis-wired or loose connections	Check all wiring and wire nut connections
	Misaligned spark electrodes	Check flame ignition and sense electrode positioning. Adjust as necessary.
	No gas at main burners	1. Check gas line for air. Purge as necessary. NOTE: After purging gas line of air, wait at least 5 minutes for any gas to dissipate before attempting to light unit. 2. Check gas valve.
Inadequate heating	Dirty air filter	Clean or replace filter as necessary
	Gas input to furnace too low	Check gas pressure at manifold match with that on unit nameplate
	Unit undersized for application	Replace with proper unit or add additional unit
	Restricted airflow	Clean or replace filter. Remove any restriction.
	Limit switch cycles main burners	Check rotation of blower, temperature rise of unit. Adjust as necessary.
Poor flame characteristics	Incomplete combustion results in: Aldehyde odors, carbon monoxide, sooting flame, floating flame	1. Tighten all screws around burner compartment 2. Cracked heat exchanger. Replace. 3. Unit over-fired. Reduce input (change orifices or adjust gas line or manifold pressure). 4. Check burner alignment. 5. Inspect heat exchanger for blockage. Clean as necessary.

Table 15 – Troubleshooting Guide–LED Status Codes for Single Stage Gas

Symptom	Cause	Remedy
No Power or Hardware failure (LED OFF)	Loss of power to control module (IGC)*.	Check 5-amp fuse son IGC*, power to unit, 24-v circuit breaker, and transformer. Units without a 24-v circuit breaker have an internal overload in the 24-v transformer. If the overload trips, allow 10 minutes for automatic reset.
Check fuse, low voltage circuit (LED 1 flash)	Fuse is blown or missing or short circuit in secondary (24VAC) wiring.	Replace fuse if needed. Verify no short circuit in low voltage (24 VAC wiring).
Limit switch faults (LED 2 flashes)	High temperature limit switch is open.	Check the operation of the indoor (evaporator) fan motor. Ensure that the supply-air temperature rise is in accordance with the range on the unit nameplate. Clean or replace filters.
Flame sense fault (LED 3 flashes)	The IGC* sensed flame that should not be present.	Reset unit. If problem persists, replace control board.
4 consecutive limit switch faults (LED 4 flashes)	Inadequate airflow to unit.	Check the operation of the indoor (evaporator) fan motor and that supply-air temperature rise agrees with range on unit nameplate information.
Ignition lockout fault (LED 5 flashes)	Unit unsuccessfully attempted ignition for 15 minutes.	Check ignitor and flame sensor electrode spacing, gaps, etc. Inspect ignitor wire; Ensure ignitor wire routed clear from inducer motor wires. Ensure that fame sense and ignition wires are properly terminated. Verify that unit is obtaining proper amount of gas. Verify that the intake tube, perforated holes on the burner box top, and the burner box baffle are aligned. Refer to Table 14 for more specific information.
Pressure Switch fault (LED 6 flashes)	Open pressure switch.	Verify wiring connections to pressure switch and inducer motor. Inspect ignitor wire; ensure ignitor wire routed clear from inducer motor wires.Verify pressure switch hose is tightly connected to both inducer housing and pressure switch. Verify inducer wheel is properly attached to inducer motor shaft. Verify inducer motor shaft is turning.
Burner Thermal Switch fault (Ultra Low NOx) (LED 7 flashes)	Burner thermal switch has opened.	Burner thermal switch will automatically reset, but IGC* will continue to lockout unit. Check gas valve operation. Verify gas orifice properly sized for application. Ensure that induced-draft blower wheel is properly secured to motor shaft. Inspect heat exchanger. Verify that the intake tube, perforated holes on the burner box top, and the burner box baffle are aligned. Reset unit at unit disconnect.
Internal control fault (LED 8 flashes)	Microprocessor has sensed an error in the software or hardware.	If error code is not cleared by resetting unit power, replace the IGC*.
Temporary 1 hr auto reset[1] (LED 9 flashes)	Electrical interference impeding IGC software	Reset 24-v. to control board or turn thermostat off, then on again. Fault will automatically reset itself in one (1) hour.

***WARNING** ⚠**:** If the IGC must be replaced, be sure to ground yourself to dissipate any electrical charge that my be present before handling new control board. The IGC is sensitive to static electricity and my be damaged if the necessary precautions are not taken.
IMPORTANT: Refer to Table 14-Troubleshooting Guide-Heating for additional troubleshooting analysis.
LEGEND
IGC—Integrated Gas Unit Controller
LED—Light-Emitting Diode

Start-Up Checklist

(Remove and Store in Job Files)

I. PRELIMINARY INFORMATION

MODEL NO.: _____

SERIAL NO.: _____

DATE: _____

TECHNICIAN: _____

II. PRESTART-UP (Insert check mark in box as each item is completed)

( ) VERIFY THAT ALL PACKING MATERIALS HAVE BEEN REMOVED FROM UNIT
( ) REMOVE ALL SHIPPING HOLD DOWN BOLTS AND BRACKETS PER INSTALLATION INSTRUCTIONS
( ) CHECK ALL ELECTRICAL CONNECTIONS AND TERMINALS FOR TIGHTNESS
( ) CHECK GAS PIPING FOR LEAKS (WHERE APPLICABLE)
( ) CHECK THAT INDOOR (EVAPORATOR) AIR FILTER IS CLEAN AND IN PLACE
( ) VERIFY THAT UNIT INSTALLATION IS LEVEL
( ) CHECK FAN WHEEL, AND PROPELLER FOR LOCATION IN HOUSING/ORIFICE AND SETSCREW TIGHTNESS
( ) INSPECT TUBING

III. START-UP

ELECTRICAL

SUPPLY VOLTAGE _____

COMPRESSOR AMPS _____

INDOOR (EVAPORATOR) FAN AMPS _____

TEMPERATURES

OUTDOOR (CONDENSER) AIR TEMPERATURE _____ DB

RETURN-AIR TEMPERATURE _____ DB _____ WB

COOLING SUPPLY AIR _____ DB _____ WB

GAS HEAT SUPPLY AIR _____

PRESSURES

GAS INLET PRESSURE _____ IN. W.C.

GAS MANIFOLD PRESSURE _____ IN. W.C.

REFRIGERANT SUCTION _____ PSIG,SUCTION LINE TEMP* _____

REFRIGERANT DISCHARGE _____ PSIG, _____ LIQUID TEMP†

( ) VERIFY REFRIGERANT CHARGE USING CHARGING CHARTS

GAS HEAT TEMPERATURE RISE RANGE (See Literature) _____ _____

MEASURED TEMPERATURE RISE (HIGH STAGE) _____

* Measured at suction inlet to compressor
†Measured at liquid line leaving condenser.

Training

My Learning Center is your central location for professional residential HVAC training resources that help strengthen careers and businesses. We believe in providing high quality learning experiences both online and in the classroom.
Access My Learning Center with your HVACpartners credentials at www.mlctraining.com. Please contact us a mylearning@carrier.com with questions.

© 2023 Carrier. All rights reserved.

Edition Date: 05/23

Catalog No: 48VG-ULN-07SI
Replaces:48VG-ULN-06SI

Manufacturer reserves the right to change, at any time, specifications and designs without notice and without obligations.