48XL/48XLN
Infinity™ 15 Packaged Air Conditioner and Gas Furnace System with Puron® (R−410A) Refrigerant
2 to 5 Nominal Tons (024−060)

Carrier®
Turn to the Experts.℠

Product Data

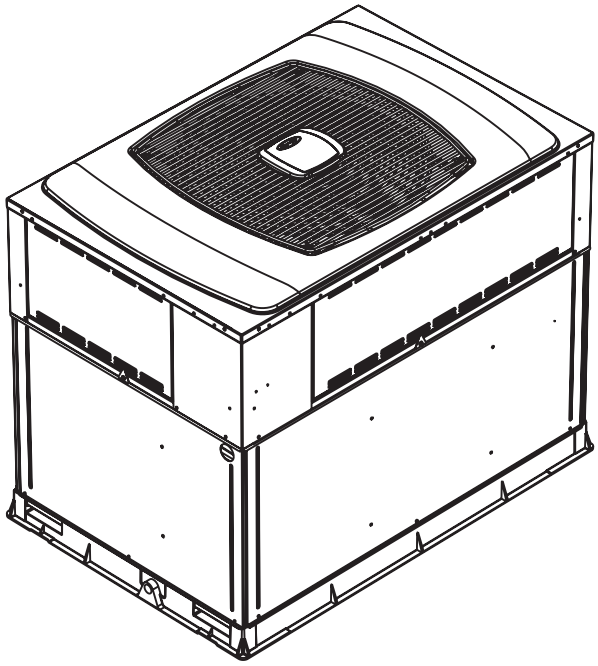

A05307

Unit 48XL

Single-Packaged Products with Energy-Saving Features and Puron® refrigerant.

- Direct Spark Ignition
- Up to 15.5 SEER
- Up to 80.1% AFUE
- Low Sound Levels
- Variable-Speed Blower (Standard)
- Factory Installed TXV
- Stainless Steel Heat Exchanger (Limited Lifetime Warranty)
- Two Stage Cooling and Heating

FEATURES/BENEFITS

One-piece heating and cooling units with low sound levels, easy installation, low maintenance, and dependable performance.

Puron® Environmentally-Sound Refrigerant is Carrier's unique refrigerant designed to help protect the environment. Puron refrigerant is an HFC refrigerant which does not contain chlorine that can harm the ozone layer. The most important advantage of Puron refrigerant is that it has not been banned in future air conditioning systems as the traditional refrigerant R-22 has been. Puron refrigerant is in service in over 100,000 systems proving highly reliable, environmentally sound performance.

IdealHumidity™ Technology featuring Infinity™ control and Variable-Speed Blower motor and two-stages of cooling and heating provide greater comfort, humidity control, and energy efficiency.

Variable-Speed Blower motors provide better comfort and energy efficiency. You can expect up to 30 times better dehumidification; economical constant fan for less than $50 a year, which provides improved indoor air quality and more even temperatures from room to room; and reduced indoor noise due to lower air velocity. In addition, you'll realize improved installation flexibility with 3 different airflow choices for best overall comfort.

Easy installation

Factory-assembled package is a compact, fully self-contained, combination gas heating/electric cooling unit that is pre-wired, pre-piped, and pre-charged for minimum installation expense. These units are available in a variety of standard and optional heating/cooling size combinations. Units are lightweight and install easily on a rooftop or at ground level. The high tech composite unit base eliminates rust problems associated with ground level applications.

Convertible duct configuration

Unit is designed for easy use in either downflow or horizontal applications. Each unit is easily converted from horizontal to downflow with the two standard duct covers.

Efficient operation

High-efficiency design with SEERs (Seasonal Energy Efficiency Ratio) of up to 15.5 and AFUE (Annual Fuel Utilization Efficiency) ratings as high at 80.1%.

Energy-saving, direct spark ignition saves gas by operating only when the room thermostat calls for heating. Standard units are furnished with natural gas controls. A low-cost field installed kit for propane conversion is available for all units.

48XLN units are dedicated Low NOx units designed for California installations. These models meet the California maximum oxides of nitrogen (NOx) emissions requirement of 40 nanograms/joule or less as shipped from the factory and MUST be installed in California Air Quality Management Districts or any other location where a Low NOx rule exists.

Durable, dependable components

Compressors have two stages of cooling and are designed for high efficiency. Each compressor is hermetically sealed against contamination to help promote longer life and dependable operation. Vibration isolation provides quiet operation. Compressors have internal high-pressure and overcurrent protection.

Monoport inshot burners produce precise air-to-gas mixture, which provides for clean and efficient combustion. The large monoport on the inshot (or injection type) burners seldom, if ever, requires cleaning. All gas furnace components are accessible in one compartment.

Turbo-tubular™ heat exchangers are constructed of 409 stainless steel for corrosion resistance and optimum heat transfer for improved efficiency. The tubular design permits hot gases to make multiple passes across the path of the supply air.

In addition, dimples located on the heat exchanger walls force the hot gases to stay in close contact with the walls, improving heat transfer.

Direct-drive, variable-speed blower motor is standard on all 48XL models.

Direct-drive, PSC condenser fan motors are designed to help reduce energy consumption and provide for cooling operation down to 55°F (12.7°C) outdoor temperature. Low-ambient cooling is available below 55°F (12.7°C) when low-ambient cooling is enabled in the User Interface (UI). Motormaster® II low-ambient kit is not required.

Infinity™ User Interface is designed to work as a system with Carrier's single-packaged product.

Refrigerant system is designed to provide dependability. Liquid refrigerant filter driers are used to promote clean, unrestricted operation. Each unit leaves the factory with a full Puron refrigerant charge. Refrigerant service connections make checking operating pressures easier.

Thermostatic Expansion Valve—A hard-shutoff, balance port TXV maintains a constant superheat at the evaporator exit (cooling cycle) resulting in higher overall system efficiency.

High- and Low-Pressure Switches give added safety and reliability to the compressor.

Indoor and outdoor coils are computer designed for optimum heat transfer and cooling efficiency. The indoor coil is fabricated from copper tube and aluminum fins and is located inside the unit for protection against damage. The outdoor coil is internally mounted on the top tier of the unit. Copper fin coils and pre-coated fin coils are available from the factory by special order. These coils are recommended in applications where aluminum fins are likely to be damaged due to corrosion. They are ideal for seacoast applications.

Low sound ratings ensure a quiet indoor and outdoor environment with sound ratings as low as 75 dB. (See page 4.)

Easy to service cabinets provide easy single-panel accessibility to serviceable components during maintenance and installation. The basepan, with integrated drain pan, provides easy ground level installation with or without a mounting pad. Convenient handholds are provided to manipulate the unit on the job site. A nesting feature ensures a positive basepan to roof curb seal when the unit is roof mounted. A convenient 3/4-in. wide perimeter flange makes frame mounting on a rooftop easy.

Warranty—The 48XL heat exchangers come with a Limited Warranty for lifetime of original owner in single family residence; 15 years in other residential and commercial applications. Five-year limited warranty on entire unit. Contact your dealer for details.

Standard metal duct covers with insulation come with the unit and cover the horizontal duct openings. These can be left in place if the units are converted to downflow.

Downflow operation is easily provided in the field to allow vertical ductwork connections. The basepan utilizes knockout style seals on the bottom openings to ensure a positive seal in the horizontal airflow mode.

Infinity Furnace Control board provides safe and efficient control of heating and simplifies trouble-shooting through its built-in diagnostic function.

Heating

- Reliable direct spark ignition system
- Two-speed PSC inducer motor with ball bearings
- Low stage heating delivers 65% of high-stage capacity

Cabinets are constructed of heavy-duty, phosphated, zinc-coated, pre-painted steel capable of withstanding 500 hrs of salt spray. Interior surfaces of the evaporator and electric heater compartments are insulated with foil-faced insulation, which keeps the conditioned air from being affected by the outdoor ambient temperature and provides improved indoor air quality. (Conforms to American Society of Heating, Refrigeration and Air Conditioning Engineers No. 62P.) The sloped drain pan minimizes standing water in the unit, which is provided with an external drain.

Louvered grille provides hail and vandalism protection for the coil.

TABLE OF CONTENTS

FEATURES/BENEFITS 1-2
MODEL NUMBER NOMENCLATURE 3
ARI CAPACITIES 4
PHYSICAL DATA 5-6
OPTIONS AND ACCESSORIES 7
BASE UNIT DIMENSIONS 8-9
ACCESSORY DIMENSIONS 10
SELECTION PROCEDURE 11
PERFORMANCE DATA 12-18
TYPICAL PIPING AND WIRING 19
APPLICATION DATA 20
ELECTRICAL DATA 20
TYPICAL WIRING SCHEMATIC 21
CONTROLS 22
GUIDE SPECIFICATIONS 23-24

MODEL NUMBER NOMENCLATURE

48XL – 024 040 3 –

Type of Unit
48XL - Packaged Air Conditioner /Gas Furnace

Low NOx Indicator
- Standard
N Low NOx

Nominal Cooling Capacity
024 - 2 Ton
030 - 2.5 Ton
036 - 3 Ton
042 - 3.5 Ton
048 - 4 Ton
060 - 5 Ton

LEGEND
AL - Aluminum
CU - Copper

Heat Input Size (Btuh)
040 - 40,000
060 - 60,000
090 - 90,000
115 - 115,000
130 - 130,000

Electrical Supply
3 - 280/230-1-60

Options

BT - AL evap, vinyl condens
CC - AL evap, CU condens
CU - CU evap & condens
TP - Base unit with tin plated indoor coil hairpins
TV - TP with vinyl coating on outdoor coil
TC - TP with AL indoor coil and CU/CU outdoor coil

Only used if ordering an option

ARI* CAPACITIES

Cooling Capacities, Efficiencies and Sound Ratings

Unit 48XL	Nominal Tons	Standard CFM (High / Low Stage)	Net Cooling Capacities (Btuh) (High / Low Stage)	EER @A**	SEER†	Sound Ratings‡ (dBA)
024040 024060	2	800 / 600	22,600 / 17,600	11.4	15.5	75
030040 030060	2-1/2	1000 / 700	28,600 / 21,400	11.6	15.0	75
036060 036090	3	1200 / 850	34,600 / 24,400	12	15.0	75
042060 042090	3-1/2	1400 / 975	40,500 / 29,000	11.6	15.0	78
048090 048115 048130	4	1600 / 1100	46,000 / 33,400	11	15.0	78
060090 060115 060130	5	1750 / 1200	57,000 / 40,500	11	14.5	78

48XL

Heating Capacities and Efficiencies

Unit 48XL	Heating Input (Btuh) High/Low	Output Capacity (Btuh) High / Low	Temperature Rise Range High °F	Temperature Rise Range Low °F	AFUE
024040 030040	40,000 / 26,000	32,000 / 20,800	20-50 (-6.6-10°C)	15-45 (-9.4-7.2°C)	78
024060 030060 036060 042060	60,000 / 39,000	49,000 / 31,200	25-55 (-3.8-12.7°C)	25-55 (-3.8-12.7°C)	78.6
036090 042090 048090 060090	90,000 / 58,500	74,000 / 46,800	35-65 (1.6-18.3°C)	35-65 (1.6-18.3°C)	79.2
048115 060115	115,000 / 75,000	95,000 / 60,000	30-60 (-1.1-15.5°C)	30-60 (-1.1-15.5°C)	80.1
048130 060130	130,000 / 84,500	104,000 / 67,600	35-65(1.6-18.3°C)	35-65 (1.6-18.3°C)	80.0

LEGEND
dBA—Sound Levels (decibels)
db—Dry Bulb
SEER—Seasonal Energy Efficiency Ratio
wb—Wet Bulb
COP—Coefficient of Performance
HSPF—Heating Season Performance Factor
* Air Conditioning & Refrigeration Institute.
** "A" conditions–80°F (26.6°C) indoor db/67°F (19.4°C) indoor wb & 95°F (35°C) outdoor db.
† Rated in accordance with U.S. Government DOE Department of Energy) test procedures and/or ARI Standards 210/240–94.
‡ Tested in accordance with ARI Standard 270–95 (not listed in ARI).
Notes:
1. Ratings are net values, reflecting the effects of circulating fan heat. Ratings are based on:
Cooling Standard: 80°F (26.6°C) db, 67°F (19.4°C) wb indoor entering air temperature and 95°F (35°C) db outdoor entering air temperature.
2. Before purchasing this appliance, read important energy cost and efficiency information available from your retailer.

PHYSICAL DATA

UNIT SIZE	024040	024060	030040	030060	036060	036090	042060	042090
NOMINAL CAPACITY (ton)	2	2	2–1/2	2–1/2	3	3	3–1/2	3–1/2
OPERATING WEIGHT (lb.)	396	401	403	408	485	493	507	515
COMPRESSORS	2–Stage Scroll							
Quantity	1							
REFRIGERANT: PURON (R–410A) Quantity (lb.)	10.1	10.1	11.3	11.3	9.5	9.5	13.8	13.8
REFRIGERANT METERING DEVICE	TXV							
Size	2 Ton	2 Ton	3 Ton	3 Ton	3 Ton	3 Ton	4 Ton	4 Ton
Part Number	EA36YD129	EA36YD129	EA36YD139	EA36YD139	EA36YD139	EA36YD139	EA36YD149	EA36YD149
OUTDOOR COIL								
Rows...Fins/in.	2...21	2...21	2...21	2...21	2...21	2...21	2...21	2...21
Face Area (sq ft)	13.6	13.6	15.3	15.3	17.5	17.5	19.4	19.4
OUTDOOR FAN								
Nominal Cfm	2700	2700	2700	2700	2800	2800	2800	2800
Diameter (in.)	22	22	22	22	22	22	22	22
Motor Hp (Rpm)	1/8 (825)	1/8 (825)	1/8 (825)	1/8 (825)	1/8 (825)	1/8 (825)	1/8 (825)	1/8 (825)
INDOOR COIL								
Rows...Fins/in.	3...17	3...17	3...17	3...17	3...17	3...17	3...17	3...17
Face Area (sq ft)	3.7	3.7	3.7	3.7	4.7	4.7	4.7	4.7
INDOOR FAN								
Nominal Airflow (Cfm)								
Comfort	Variable based on Comfort Roll back (see User Interface instructions for more information).							
Efficiency	700	700	875	875	1050	1050	1225	1225
Max	800	800	1000	1000	1200	1200	1400	1400
Furnace (gas ht.) airflow–Low Stage	475	727	475	727	745	875	745	875
Furnace (gas ht.) airflow–High Stage	844	1120	844	1120	1120	1410	1120	1410
Size (in.)	10x10	10x10	10x10	10x10	11x10	11x10	11x10	11x10
Motor HP (RPM)	1/2	1/2	1/2	1/2	3/4	3/4	3/4	3/4
FURNACE SECTION* **Burner Orifice No. (Qty...Drill Size)** Natural Gas	2...44	3...44	2...44	3...44	3...44	3...38	3...44	3...38
HIGH–PRESSURE SWITCH (psig)								
Cut–out	670 ±10							
Reset (Auto)	470 ± 25							
HIGH–PRESSURE SWITCH 2 (psig) (Compressor Solenoid)								
Cut–out	565 ± 15							
Reset (Auto)	455 ± 15							
LOSS–OF–CHARGE / LOW–PRESSURE SWITCH (Liquid Line) (psig)								
Cut–out	25 ± 5							
Reset (auto)	55 ± 5							
RETURN–AIR FILTERS (in.)† Throwaway	20x24x1	20x24x1	20x24x1	20x24x1	24x30x1	24x30x1	24x36x1	24x36x1

Continued next page.

PHYSICAL DATA CONTINUED

UNIT SIZE	048090	048115	048130	060090	060115	060130
NOMINAL CAPACITY (ton)	4	4	4	5	5	5
OPERATING WEIGHT (lb.)	521	521	521	572	572	572
COMPRESSORS	2-Stage Scroll					
Quantity	1					
REFRIGERANT: PURON (R-410A) Quantity (lb.)	15.3	15.3	15.3	15.8	15.8	15.8
REFRIGERANT METERING DEVICE	TXV					
Size	4 Ton	4 Ton	4 Ton	5 Ton	5 Ton	5 Ton
Part Number	EA36YD149	EA36YD149	EA36YD149	EA36YD159	EA36YD159	EA36YD159
OUTDOOR FAN						
Nominal Cfm	3300	3300	3300	3300	3300	3300
Diameter (in.)	22	22	22	22	22	22
Motor Hp (Rpm)	1/4 (1100)	1/4 (1100)	1/4 (1100)	1/3 (1110)	1/3 (1110)	1/3 (1110)
OUTDOOR COIL						
Rows...Fins/in.	2...21	2...21	2...21	2...21	2...21	2...21
Face Area (sq ft)	19.4	19.4	19.4	23.3	23.3	23.3
INDOOR COIL						
Rows...Fins/in.	3...17	3...17	3...17	4...17	4...17	4...17
Face Area (sq ft)	5.7	5.7	5.7	5.7	5.7	5.7
INDOOR FAN						
Nominal Airflow (Cfm)						
Comfort	Variable based on Comfort Roll back (see User Interface instructions for more information).					
Efficiency	1400	1400	1400	1750	1750	1750
Max	1600	1600	1600	2000	2000	2000
Furnace (gas ht.) airflow–Low Stage	815	1215	1255	845	1215	1255
Furnace (gas ht.) airflow–High Stage	1385	1885	1875	1300	1910	1920
Size (In.)	11x10	11x10	11x10	11x10	11x10	11x10
Motor HP (RPM)	3/4	3/4	3/4	1	1	1
FURNACE SECTION* **Burner Orifice No. (Qty...Drill Size)** Natural Gas	3...38	3...33	3...31	3...38	3...33	3...31
HIGH-PRESSURE SWITCH (psig)						
Cut-out	670 ± 10					
Reset (Auto)	470 ± 25					
HIGH-PRESSURE SWITCH 2 (psig) (Compressor Solenoid)						
Cut-out	565 ± 15					
Reset (Auto)	455 ± 15					
LOSS-OF-CHARGE / LOW-PRESSURE SWITCH (Liquid Line) (psig)						
Cut-out	25 ± 5					
Reset (auto)	55 ± 5					
RETURN-AIR FILTERS (in.)† Throwaway	24x36x1	24x36x1	24x36x1	24x36x1	24x36x1	24x36x1

*Based on altitude of 0 to 2000 ft.

† Recommended filter sizes for field-installed air filter grilles mounted on the wall or ceiling of the conditioned structure. Required filter sizes shown are based on the larger of the ARI (Air Conditioning and Refrigeration Institute) rated cooling airflow or the heating airflow velocity of 300 ft/minute for throwaway type or 450 ft/minute for high-capacity type. Air filter pressure drop for non-standard filters must not exceed 0.08 in. wg.

OUTDOOR SOUND: OCTAVE BAND DATA—DECIBELS (dBA)

MODEL NO.	48XL					
Frequency (Hz)	**024**	**030**	**036**	**042**	**048**	**060**
125	58.8	58.8	60.7	56.7	62.4	63.5
250	63.5	63.5	63.3	62.8	69.9	67.6
500	67.2	67.2	66.8	67.8	71.3	71.8
1000	66.9	66.9	66.5	67.4	73.4	75.5
2000	63.7	63.7	64.2	63.7	70.0	71.0
4000	58.3	58.3	60.3	57.7	66.3	68.1
8000	50.0	50.0	53.0	50.8	60.1	59.9

OPTIONS AND ACCESSORIES

Factory-installed options

Coil options include tin-plated* indoor hairpins, copper/copper and vinyl-coated construction for refrigerant coils. Units are shipped standard with copper tube/aluminum fin construction. See model number nomenclature for coil options.

*Tin-plated indoor coils are built with special hairpins that are designed to resist both general pitting corrosion and excessive indoor corrosion (Formicary Corrosion).

Field-installed accessories

Manual Air Damper (25% open)
Filter Rack
Flat Roof Curbs (8-in. and 14-in.)
Square-to-Round Duct Transition Kit
Infinity™ User Interface
Crankcase Heater
LP to Natural Conversion Kit
LP High Altitude Kit (2001 to 6000 ft)
LP Standard Altitude Kit (0 to 2000 ft)
Lifting Kit
Compressor Hard Start Kit (for use on single-phase units only)

Manual outside air damper includes hood and filter rack with adjustable damper blade for up to 25% outdoor air.

Flat roof curbs in both 8 in. and 14 in. sizes are available for roof mounted applications.

Square-to-round duct transition kit enables 024-048 size units to be fitted to 14 in. round ductwork.

Compressor hard start kit assists compressor start-up by providing additional starting torque on single-phase units and prolongs compressor motor life.

Infinity User Interface coupled with the system's variable-speed indoor blower delivers Carrier's patented IdealHumidity technology that allows for even greater humidity control. Along with more precisely controlling temperature and humidity, the Infinity User Interface offers full seven-day programmability allowing you to further customize your comfort and energy savings.

Lifting kit includes 4 metal brackets that are available to assist in lifting this product onto a roof application.

LP (liquid propane) conversion kit allows for conversion from natural gas to liquid propane fuel.

High altitude kit is for use at 2001 to 6000 ft above sea level. Kit consists of LPgas orifices that compensate for gas heat operation at high altitude.

LP to natural gas conversion kit allows conversion back to natural gas.

Crankcase heater provides anti-floodback protection for low-load cooling applications.

Filter rack features easy installation, serviceability, and high-filtering performance for vertical or horizontal applications.

FILTER RACK

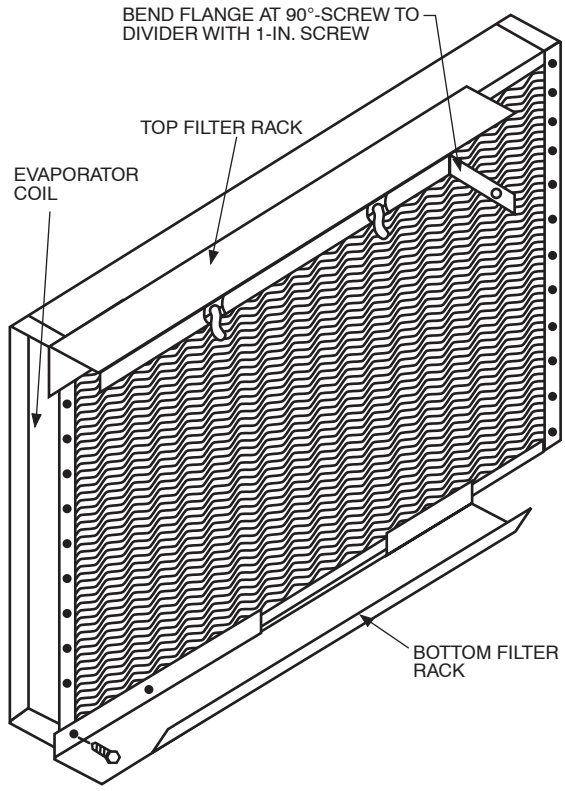

MANUAL OUTSIDE AIR DAMPER

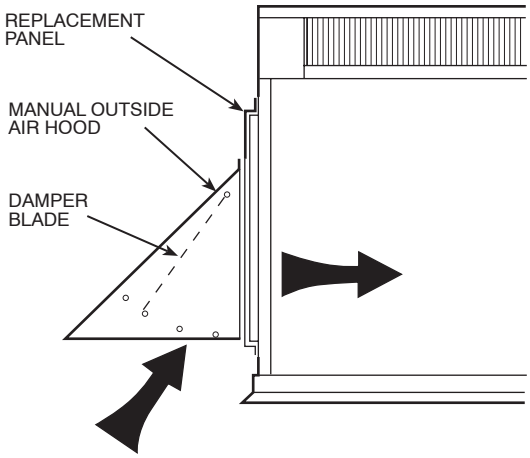

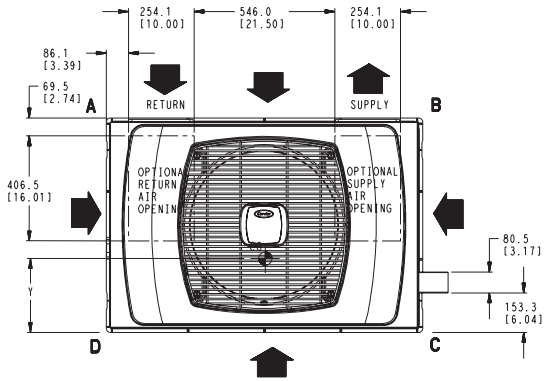

TOP VIEW

UNIT	ELECTRICAL CHARACTERISTICS	UNIT WT.		UNIT HEIGHT	CENTER OF GRAVITY MM/IN		
		LBS.	KG.	"A"	X	Y	Z
48XL024040	208/230-1-60	396	179.6	1041.9(41.02)	508.0(20.0)	489.0(19.3)	447.0(17.6)
48XL024060	208/230-1-60	401	181.9	1041.9(41.02)	508.0(20.0)	489.0(19.3)	447.0(17.6)
48XL030040	208/230-1-60	403	182.8	1092.7(43.02)	508.0(20.0)	489.0(19.3)	447.0(17.6)
48XL030060	208/230-1-60	408	185.1	1092.7(43.02)	508.0(20.0)	489.0(19.3)	447.0(17.6)

CORNER WEIGHT LBS./KG.				
	A	B	C	D
024040	85/38.6	85/38.6	79/35.8	147/66.7
024060	86/39.0	86/39.0	80/36.3	148/67.1
030040	87/39.5	87/39.5	80/36.3	149/67.6
030060	88/39.9	88/39.9	81/36.7	151/68.5

REQUIRED CLEARANCES TO COMBUSTIBLE MATL.

MILLIMETERS [IN]
TOP OF UNIT.....355.6 [14.00]
DUCT SIDE OF UNIT.....50.8 [2.00]
SIDE OPPOSITE DUCTS.....355.6 [14.00]
BOTTOM OF UNIT.....12.7 [0.50]
ELECTRIC HEAT PANEL.....914.4 [36.00]

NEC. REQUIRED CLEARANCES.

MILLIMETERS [IN]
BETWEEN UNITS, POWER ENTRY SIDE.....1066.8 [42.00]
UNIT AND UNGROUNDED SURFACES, POWER ENTRY SIDE.....914.0 [36.00]
UNIT AND BLOCK OR CONCRETE WALLS AND OTHER
GROUNDED SURFACES, POWER ENTRY SIDE.....1066.8 [42.00]

REQUIRED CLEARANCE FOR OPERATION AND SERVICING

MILLIMETERS [IN]
EVAP. COIL ACCESS SIDE.....914.0 [36.00]
POWER ENTRY SIDE.....914.0 [36.00]
(EXCEPT FOR NEC REQUIREMENTS)
UNIT TOP.....914.0 [36.00]
SIDE OPPOSITE DUCTS.....914.0 [36.00]
DUCT PANEL.....304.8 [12.00]*

*MINIMUM DISTANCES:IF UNIT IS PLACED LESS THAN 304.8 [12.00] FROM WALL SYSTEM,THEN SYSTEM PERFORMANCE MAYBE COMPROMISED.

DIMENSIONS IN [] ARE IN INCHES

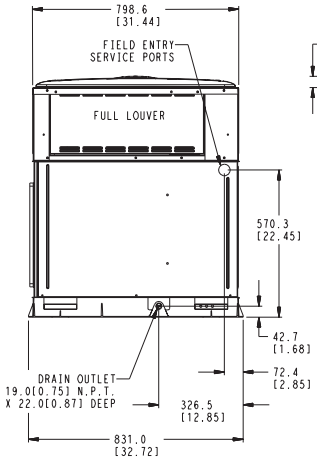

LEFT SIDE VIEW

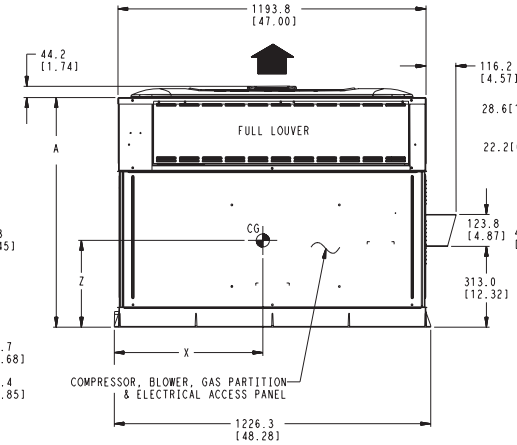

FRONT VIEW

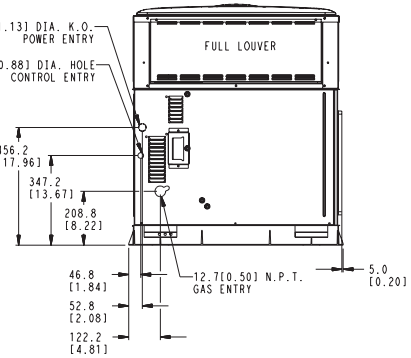

RIGHT SIDE VIEW

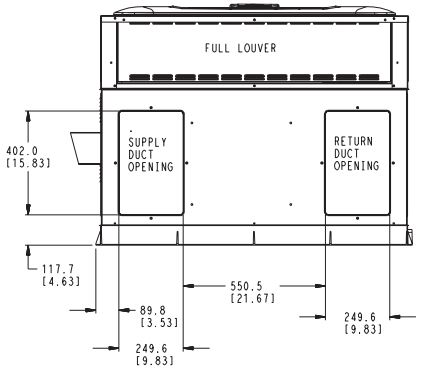

REAR VIEW

A06608

48XL024-030 Unit Dimensions

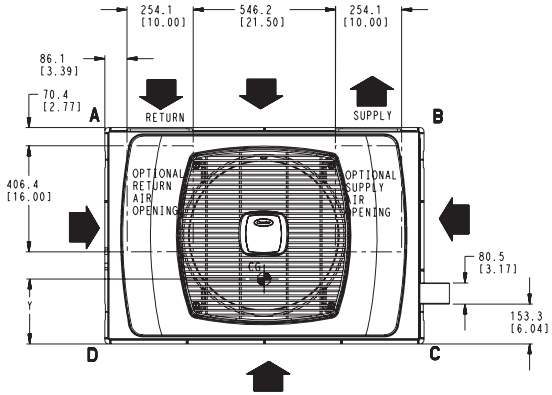

TOP VIEW

UNIT	ELECTRICAL CHARACTERISTICS	UNIT WT.		UNIT HEIGHT	CENTER OF GRAVITY MM/IN		
		LBS.	KG.	"A"	X	Y	Z
48XL036060	208/230-1-60	485	220.0	1142.5(44.98)	553.4(21.0)	520.7(20.5)	421.6(16.6)
48XL036090	208/230-1-60	493	223.6	1142.5(44.98)	553.4(21.0)	520.7(20.5)	421.6(16.6)
48XL042060	208/230-1-60	507	229.0	1193.3(46.98)	553.4(21.0)	520.7(20.5)	421.6(16.6)
48XL042090	208/230-1-60	515	233.6	1193.3(46.98)	553.4(21.0)	520.7(20.5)	421.6(16.6)
48XL048090	208/230-1-60	521	236.3	1193.3(46.98)	495.3(19.5)	539.8(21.3)	457.2(18.0)
48XL048115	208/230-1-60	521	236.3	1193.3(46.98)	495.3(19.5)	539.8(21.3)	457.2(18.0)
48XL048130	208/230-1-60	521	236.3	1193.3(46.98)	495.3(19.5)	539.8(21.3)	457.2(18.0)
48XL060090	208/230-1-60	572	259.5	1294.9(50.98)	553.4(21.0)	508.0(20.0)	447.0(17.6)
48XL060115	208/230-1-60	572	259.5	1294.9(50.98)	553.4(21.0)	508.0(20.0)	447.0(17.6)
48XL060130	208/230-1-60	572	259.5	1294.9(50.98)	553.4(21.0)	508.0(20.0)	447.0(17.6)

CORNER WEIGHT LBS./KG.				
	A	B	C	D
036060	100/45.4	112/50.8	91/41.3	182/82.6
036090	101/45.8	114/51.7	92/41.7	185/83.9
042060	111/50.3	79/35.8	136/61.7	181/82.1
042090	113/51.3	81/36.7	138/62.6	184/83.5
048090	115/52.2	86/39.0	138/62.6	182/82.6
048115	115/52.2	86/39.0	138/62.6	182/82.6
048130	115/52.2	86/39.0	138/62.6	182/82.6
060090	126/57.2	91/41.3	153/69.4	202/91.6
060115	126/57.2	91/41.3	153/69.4	202/91.6
060130	126/57.2	91/41.3	153/69.4	202/91.6

REQUIRED CLEARANCES TO COMBUSTIBLE MATL.

MILLIMETERS [IN]
TOP OF UNIT.....355.6 [14.00]
DUCT SIDE OF UNIT.....50.8 [2.00]
SIDE OPPOSITE DUCTS.....355.6 [14.00]
BOTTOM OF UNIT.....12.7 [0.50]
ELECTRIC HEAT PANEL.....914.4 [36.00]

NEC. REQUIRED CLEARANCES.

MILLIMETERS [IN]
BETWEEN UNITS, POWER ENTRY SIDE.....1066.8 [42.00]
UNIT AND UNGROUNDED SURFACES, POWER ENTRY SIDE.....914.0 [36.00]
UNIT AND BLOCK OR CONCRETE WALLS AND OTHER
GROUNDED SURFACES, POWER ENTRY SIDE.....1066.8 [42.00]

REQUIRED CLEARANCE FOR OPERATION AND SERVICING

MILLIMETERS [IN]
EVAP. COIL ACCESS SIDE.....914.0 [36.00]
POWER ENTRY SIDE.....914.0 [36.00]
(EXCEPT FOR NEC REQUIREMENTS)
UNIT TOP.....914.0 [36.00]
SIDE OPPOSITE DUCTS.....914.0 [36.00]
DUCT PANEL.....304.8 [12.00]*

*MINIMUM DISTANCES:IF UNIT IS PLACED LESS THAN 304.8 [12.00] FROM WALL SYSTEM,THEN SYSTEM PERFORMANCE MAYBE COMPROMISED.

DIMENSIONS IN [] ARE IN INCHES

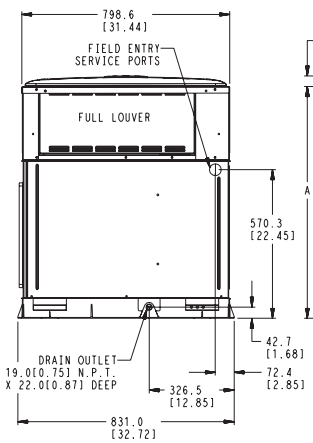

LEFT SIDE VIEW

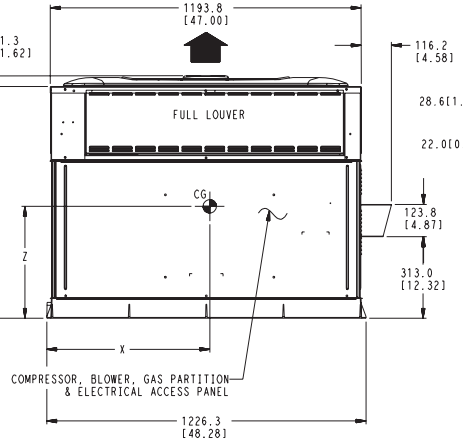

FRONT VIEW

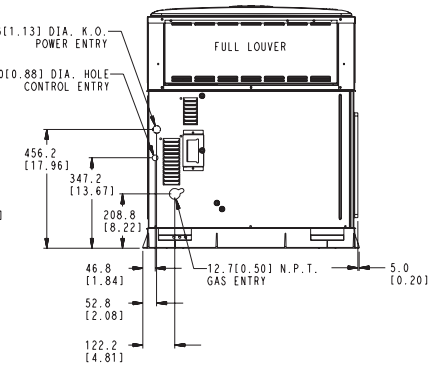

RIGHT SIDE VIEW

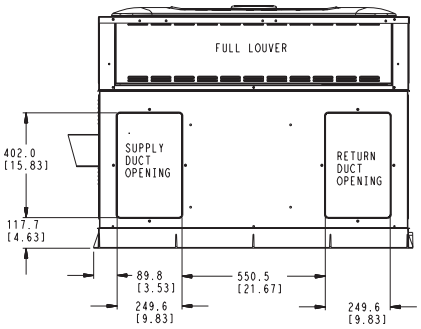

REAR VIEW

A06593

48XL036-060 Unit Dimensions

ACCESSORY DIMENSIONS

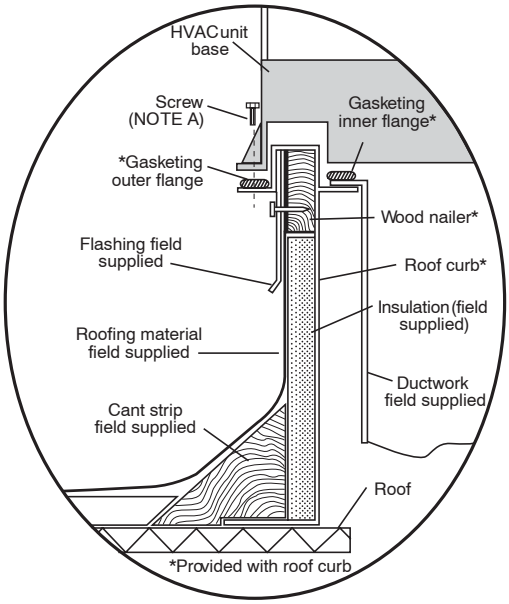

Roof Curb for Small Cabinet

Note A: When unit mounting screw is used, retainer bracket must also be used.

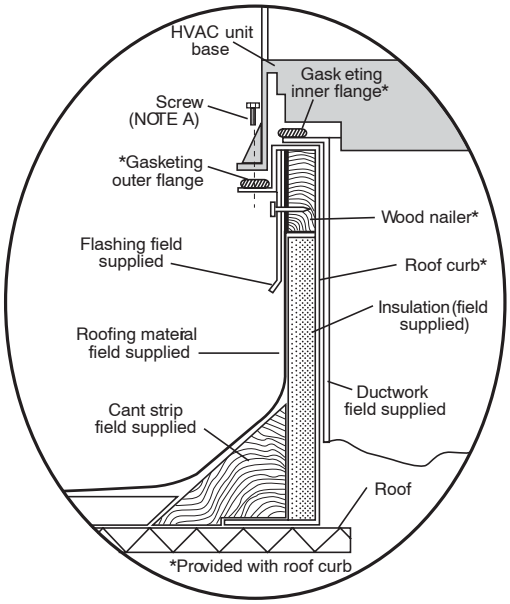

Roof Curb for Large Cabinet

Note A: When unit mounting screw is used, retainer bracket must also be used.

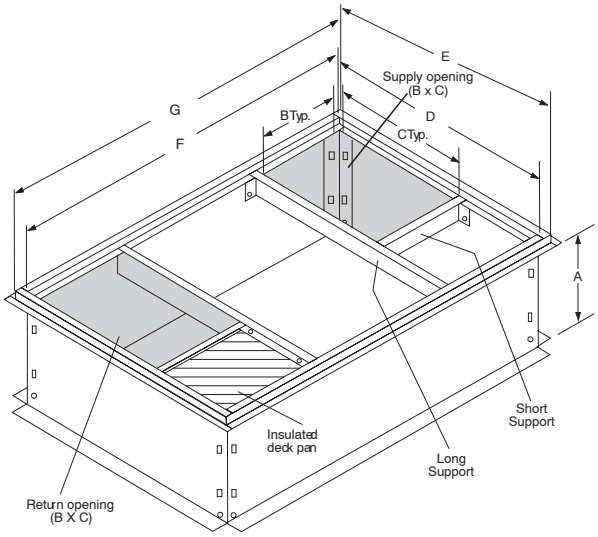

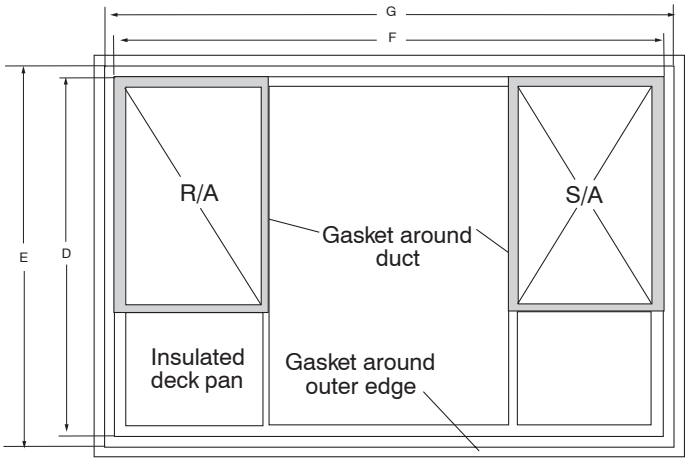

A05308

UNIT SIZE	ODS CATALOG NUMBER	A IN. (MM)	B IN. (MM)	C IN. (MM)	D IN. (MM)	E IN. (MM)	F IN. (MM)	G IN. (MM)
024-030	CPRFCURB006A00	8 (203)	11 (279)	16-1/2 (419)	28-3/4 (730)	30-3/8 (771)	44-5/16 (1126)	45-15/16 (1167)
	CPRFCURB007A00	14 (356)	11 (279)	16-1/2 (419)	28-3/4 (730)	30-3/8 (771)	44-5/16 (1126)	45-15/16 (1167)
036-060	CPRFCURB008A00	8 (203)	16-3/16 (411)	17-3/8 (441)	40-1/4 (1022)	41-15/16 (1065)	44-7/16 (1129)	46-1/16 (1169)
	CPRFCURB009A00	14 (356)	16-3/16 (411)	17-3/8 (441)	40-1/4 (1022)	41-15/16 (1065)	44-7/16 (1129)	46-1/16 (1169)

NOTES:

1. Roof curb must be set up for unit being installed.
2. Seal strip must be applied, as required, to unit being installed.
3. Dimensions are in inches.
4. Dimensions in ( ) are in millimeters.
5. Roof curb is made of 16-gauge steel.
6. Attach ductwork to curb (flanges of duct rest on curb).
7. Insulated panels: 1-in. thick fiberglass 1 lb. density.
8. When unit mounting screw is used (see Note A), a retainer bracket must be used as well. This bracket must also be used when required by code for hurricane or seismic conditions. This bracket is available through Micrometl.

48XL CORNER WEIGHTS

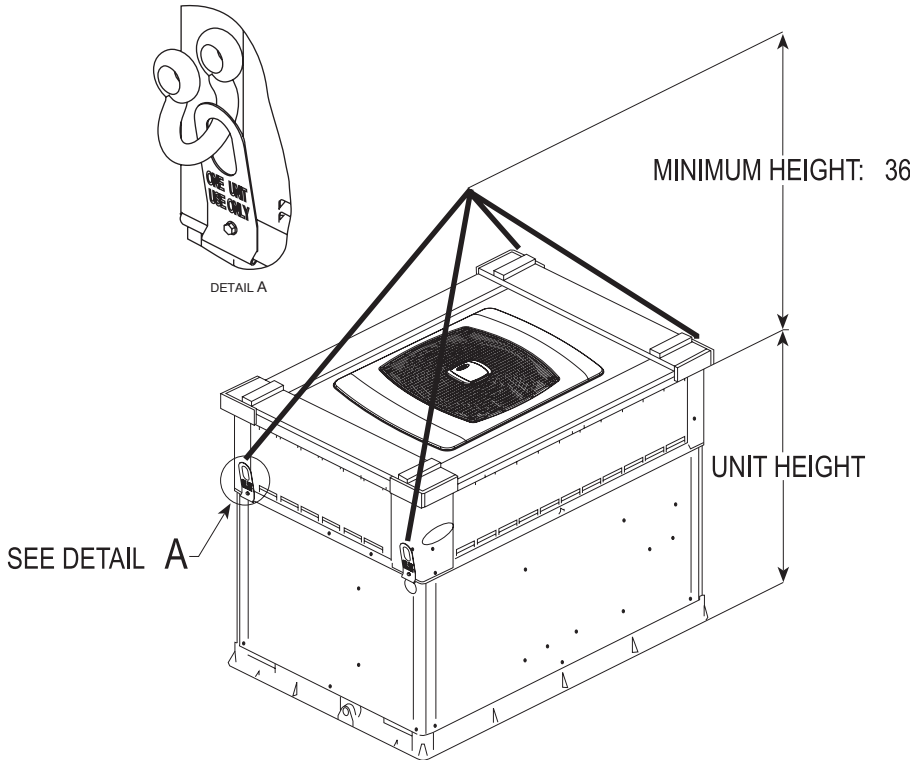

A06298

CABINET	MODEL	RIGGING WT (LB)	A	B	C	D
Small	48XL-024	420	90	90	83	155
	48XL-030	427	92	92	85	158
Large	48XL-036	515	106	119	97	193
	48XL-042	537	118	84	144	192
	48XL-048	543	120	90	144	189
	48XL-060	594	130	95	159	210

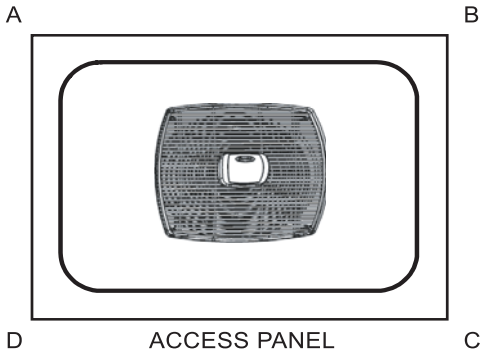

A06296

SELECTION PROCEDURE

Determine cooling and heating requirements at design conditions:

Given:

REQUIRED COOLING CAPACITY (TC) . . . . . 34,500 BTUH
SENSIBLE HEAT CAPACITY (SHC) . . . . . 42,000 BTUH
REQUIRED HEATING CAPACITY (SHC) . . . . 42,000 BTUH
CONDENSER ENTERING AIR TEMPERATURE 95°F (35°C)
INDOOR-AIR TEMPERATURE . . 80°F (26.6°C) EDB, 67°F (19.4°C) EWB
EVAPORATOR AIR QUANTITY . . . . . 1200 CFM
ELECTRICAL CHARACTERISTICS 230-1-60

Select unit based on required cooling capacity

Enter Net Cooling Capacities table at condenser entering temperature of 95°F (35°C). The 036 unit at 1200 cfm and 67°F (19.4°C) ewb (entering wet bulb) will provide a total capacity of 34,600 Btuh and a SHC of 24,200 Btuh. Calculate SHC correction, if required, using Note 4 under Cooling Capacities tables.

Select heating capacity of unit to provide design condition requirement

In the Heating Capacities and Efficiencies table on page 4, note that the unit 036060 will provide 48,000 Btuh with an input of 60,000 Btuh.

Select unit that corresponds to power source available

The Electrical Data table shows that the unit is designed to operate at 208/230-1-60.

PERFORMANCE DATA-STANDARD ECM INDOOR MOTOR

Cooling Extended Performance Table

48XL024 High Cool

EVAPORATOR AIR		CONDENSER ENTERING AIR TEMPERATURES deg F (°C)																	
		75 (23.8)			85 (29.4)			95 (35)			105 (40.5)			115 (46.1)			125 (51.6)		
CFM	EWB	Capacity MBtuh		Total System KW	Capacity MBtuh		Total System KW	Capacity MBtuh		Total System KW	Capacity MBtuh		Total System KW	Capacity MBtuh		Total System KW	Capacity MBtuh		Total System KW
		Total	Sens		Total	Sens		Total	Sens		Total	Sens		Total	Sens		Total	Sens	
700	57	21.77	21.77	1.61	20.88	20.88	1.79	19.95	19.95	2.00	18.94	18.94	2.23	17.86	17.86	2.48	16.66	16.66	2.77
	62	22.40	18.69	1.61	21.29	18.21	1.80	20.13	17.70	2.00	18.95	18.95	2.23	17.86	17.86	2.48	16.66	16.66	2.77
	63	22.85	15.18	1.62	21.71	14.70	1.80	20.52	14.21	2.01	19.25	13.70	2.23	17.90	13.16	2.48	16.42	12.58	2.77
	67	24.66	15.72	1.64	23.44	15.24	1.83	22.15	14.75	2.03	20.79	14.24	2.26	19.34	13.70	2.51	17.74	13.12	2.79
	72	27.16	12.75	1.67	25.83	12.28	1.86	24.42	11.80	2.06	22.94	11.29	2.29	21.33	10.76	2.54	19.57	10.18	2.83
800	57	22.76	22.76	1.64	21.81	21.81	1.82	20.81	20.81	2.03	19.74	19.74	2.26	18.58	18.58	2.51	17.29	17.29	2.80
	62	22.97	20.16	1.64	21.84	21.76	1.82	20.81	20.81	2.03	19.74	19.74	2.26	18.58	18.58	2.51	17.29	17.29	2.80
	63	23.39	16.20	1.64	22.19	15.71	1.83	20.94	15.21	2.03	19.62	14.69	2.26	18.22	14.14	2.51	16.69	13.54	2.79
	67	25.22	16.81	1.67	23.94	16.32	1.85	22.60	15.82	2.05	21.18	15.30	2.28	19.67	14.74	2.53	18.01	14.14	2.82
	72	27.77	13.43	1.70	26.37	12.96	1.88	24.90	12.48	2.09	23.35	11.95	2.31	21.66	11.41	2.57	20.60	11.05	2.57

48XL024 Low Cool

EVAPORATOR AIR		CONDENSER ENTERING AIR TEMPERATURES deg F (°C)																	
		75 (23.8)			85 (29.4)			95 (35)			105 (40.5)			115 (46.1)			125 (51.6)		
CFM	EWB	Capacity MBtuh		Total System KW	Capacity MBtuh		Total System KW	Capacity MBtuh		Total System KW	Capacity MBtuh		Total System KW	Capacity MBtuh		Total System KW	Capacity MBtuh		Total System KW
		Total	Sens		Total	Sens		Total	Sens		Total	Sens		Total	Sens		Total	Sens	
525	57	16.65	16.65	1.05	15.95	15.95	1.20	15.21	15.21	1.37	14.40	14.40	1.57	13.52	13.52	1.80	12.55	12.55	2.07
	62	17.20	14.47	1.06	16.29	14.07	1.21	15.34	13.65	1.37	14.40	14.40	1.57	13.52	13.52	1.80	12.55	12.55	2.07
	63	17.61	11.75	1.06	16.69	11.36	1.21	15.70	10.96	1.38	14.64	10.53	1.57	13.50	10.07	1.80	12.27	9.58	2.06
	67	19.23	12.26	1.08	18.23	11.87	1.22	17.18	11.47	1.39	16.05	11.03	1.58	14.83	10.58	1.81	13.50	10.09	2.07
	72	21.48	10.05	1.09	20.41	9.66	1.24	19.26	9.26	1.41	18.02	8.84	1.60	16.69	8.39	1.83	15.24	7.90	2.09
600	57	17.52	17.52	1.08	16.77	16.77	1.23	15.96	15.96	1.39	15.10	15.10	1.59	14.15	14.15	1.82	13.11	13.11	2.09
	62	17.71	15.66	1.08	16.78	16.75	1.23	15.96	15.96	1.39	15.10	15.10	1.59	14.15	14.15	1.82	13.12	13.12	2.09
	63	18.10	12.58	1.08	17.12	12.18	1.23	16.09	11.76	1.39	14.98	11.32	1.59	13.80	10.85	1.81	12.51	10.35	2.08
	67	19.75	13.14	1.09	18.71	12.74	1.24	17.60	12.32	1.41	16.41	11.88	1.60	15.14	11.41	1.83	13.76	10.91	2.09
	72	22.06	10.61	1.11	20.93	10.21	1.26	19.72	9.80	1.43	18.41	9.36	1.62	17.03	8.91	1.85	15.51	8.41	2.11

See page 18 for cooling notes.

PERFORMANCE DATA-STANDARD ECM INDOOR MOTOR

Cooling Extended Performance Table

48XL030 High Cool

EVAPORATOR AIR		CONDENSER ENTERING AIR TEMPERATURES deg F (°C)																	
		75 (23.8)			85 (29.4)			95 (35)			105 (40.5)			115 (46.1)			125 (51.6)		
CFM	EWB	Capacity MBtuh		Total System KW	Capacity MBtuh		Total System KW	Capacity MBtuh		Total System KW	Capacity MBtuh		Total System KW	Capacity MBtuh		Total System KW	Capacity MBtuh		Total System KW
		Total	Sens		Total	Sens		Total	Sens		Total	Sens		Total	Sens		Total	Sens	
875	57	27.90	27.90	2.05	26.73	26.73	2.27	25.47	25.47	2.52	24.09	24.09	2.79	22.56	22.56	3.10	20.81	20.81	3.44
	62	28.72	23.85	2.06	27.25	23.21	2.28	25.70	22.53	2.52	24.09	24.09	2.79	22.56	22.56	3.10	20.81	20.81	3.44
	63	29.28	19.34	2.07	27.78	18.72	2.29	26.18	18.07	2.53	24.46	17.38	2.80	22.58	16.64	3.10	20.50	15.82	3.43
	67	31.48	19.99	2.10	29.85	19.36	2.32	28.11	18.70	2.56	26.23	18.00	2.83	24.19	17.25	3.13	21.92	16.42	3.47
	72	34.49	16.13	2.14	32.69	15.50	2.36	30.77	14.85	2.61	28.70	14.15	2.88	26.43	13.40	3.18	26.31	13.36	3.19
1000	57	29.10	29.10	2.09	27.84	27.84	2.32	26.48	26.48	2.56	25.00	25.00	2.84	23.34	23.34	3.15	21.47	21.47	3.49
	62	29.40	25.68	2.10	27.90	27.75	2.32	26.48	26.48	2.56	25.00	25.00	2.84	23.34	23.34	3.15	21.47	21.47	3.49
	63	29.91	20.61	2.10	28.33	19.98	2.32	26.66	19.31	2.57	24.86	18.60	2.83	22.90	17.84	3.13	20.75	17.00	3.47
	67	32.13	21.34	2.14	30.42	20.69	2.36	28.60	20.02	2.60	26.64	19.30	2.87	24.51	18.53	3.17	22.47	16.98	3.51
	72	35.18	16.96	2.18	33.29	16.32	2.40	31.27	15.65	2.65	29.11	14.94	2.92	26.76	14.18	3.22	24.19	13.36	3.55

48XL030 Low Cool

EVAPORATOR AIR		CONDENSER ENTERING AIR TEMPERATURES deg F (°C)																	
		75 (23.8)			85 (29.4)			95 (35)			105 (40.5)			115 (46.1)			125 (51.6)		
CFM	EWB	Capacity MBtuh		Total System KW	Capacity MBtuh		Total System KW	Capacity MBtuh		Total System KW	Capacity MBtuh		Total System KW	Capacity MBtuh		Total System KW	Capacity MBtuh		Total System KW
		Total	Sens		Total	Sens		Total	Sens		Total	Sens		Total	Sens		Total	Sens	
615	57	20.32	20.32	1.29	19.50	19.50	1.48	18.60	18.60	1.70	17.60	17.60	1.95	16.20	16.20	2.21	15.23	15.23	2.58
	62	21.08	17.65	1.30	20.01	17.18	1.49	18.86	16.67	1.70	17.62	17.58	1.95	16.49	16.49	2.24	15.23	15.23	2.58
	63	21.55	14.40	1.30	20.47	13.94	1.49	19.28	13.44	1.70	17.99	12.90	1.95	16.58	12.33	2.24	15.02	11.71	2.58
	67	23.40	14.96	1.32	22.22	14.49	1.51	20.93	13.99	1.72	19.51	13.44	1.97	17.97	12.85	2.26	16.26	12.24	2.60
	72	25.95	12.26	1.35	24.65	11.79	1.53	23.20	11.28	1.75	21.63	10.73	2.00	19.91	10.14	2.28	18.01	9.51	2.62
700	57	21.32	21.32	1.31	20.44	20.44	1.50	19.46	19.46	1.72	18.38	18.38	1.97	17.17	17.17	2.26	15.82	15.82	2.60
	62	21.67	19.04	1.31	20.56	18.54	1.50	19.46	19.46	1.72	18.38	18.38	1.97	17.17	17.17	2.26	15.82	15.82	2.60
	63	22.13	15.36	1.32	20.98	14.89	1.51	19.74	14.38	1.72	18.38	13.83	1.97	16.90	13.24	2.26	15.28	12.60	2.60
	67	24.00	15.98	1.34	22.76	15.50	1.53	21.40	14.98	1.74	19.91	14.42	1.99	18.29	13.82	2.28	16.52	13.17	2.61
	72	26.61	12.91	1.36	25.22	12.42	1.55	23.71	11.90	1.76	22.06	11.34	2.01	20.25	10.74	2.30	18.28	10.09	2.63

See page 18 for cooling notes.

PERFORMANCE DATA-STANDARD ECM INDOOR MOTOR

Cooling Extended Performance Table

48XL036 High Cool

EVAPORATOR AIR		CONDENSER ENTERING AIR TEMPERATURES deg F (°C)																	
		75 (23.8)			85 (29.4)			95 (35)			105 (40.5)			115 (46.1)			125 (51.6)		
CFM	EWB	Capacity MBtuh		Total System KW	Capacity MBtuh		Total System KW	Capacity MBtuh		Total System KW	Capacity MBtuh		Total System KW	Capacity MBtuh		Total System KW	Capacity MBtuh		Total System KW
		Total	Sens		Total	Sens		Total	Sens		Total	Sens		Total	Sens		Total	Sens	
1050	57	33.64	33.64	2.28	32.32	32.32	2.53	30.90	30.90	2.81	29.36	29.36	3.11	27.65	27.65	3.46	25.71	25.71	3.84
	62	34.47	28.72	2.29	32.83	28.00	2.54	31.11	27.24	2.81	29.36	29.36	3.11	27.65	27.65	3.46	25.71	25.71	3.84
	63	35.12	23.25	2.29	33.44	22.56	2.54	31.65	21.83	2.81	29.73	21.07	3.12	27.64	20.25	3.45	25.33	19.35	3.83
	67	37.76	24.04	2.32	35.94	23.34	2.57	34.00	22.61	2.84	31.91	21.83	3.15	29.65	21.00	3.49	27.14	20.10	3.87
	73	42.16	18.41	2.37	40.12	17.73	2.62	37.93	17.01	2.90	35.58	16.24	3.20	33.02	15.43	3.54	30.21	14.53	3.92
1200	57	35.06	35.06	2.32	33.64	33.64	2.58	32.12	32.12	2.85	30.46	30.46	3.16	28.63	28.63	3.50	26.56	26.56	3.89
	62	35.29	30.91	2.33	33.64	33.64	2.58	32.12	32.12	2.85	30.46	30.46	3.16	28.63	28.63	3.50	26.56	26.56	3.89
	63	35.86	24.79	2.33	34.09	24.08	2.58	32.22	23.34	2.85	30.23	22.56	3.15	28.05	21.71	3.49	25.66	20.78	3.87
	67	38.52	25.68	2.36	36.62	24.97	2.61	34.60	24.22	2.88	32.43	23.43	3.19	30.06	22.57	3.53	27.47	21.64	3.90
	73	42.99	19.31	2.41	40.85	18.61	2.66	38.57	17.87	2.93	36.13	17.09	3.24	33.48	16.25	3.58	30.56	15.35	3.96

48XL036 Low Cool

EVAPORATOR AIR		CONDENSER ENTERING AIR TEMPERATURES deg F (°C)																	
		75 (23.8)			85 (29.4)			95 (35)			105 (40.5)			115 (46.1)			125 (51.6)		
CFM	EWB	Capacity MBtuh		Total System KW	Capacity MBtuh		Total System KW	Capacity MBtuh		Total System KW	Capacity MBtuh		Total System KW	Capacity MBtuh		Total System KW	Capacity MBtuh		Total System KW
		Total	Sens		Total	Sens		Total	Sens		Total	Sens		Total	Sens		Total	Sens	
745	57	23.27	23.27	1.46	22.34	22.34	1.65	21.31	21.31	1.87	20.19	20.19	2.12	18.95	18.95	2.41	17.58	17.58	2.76
	62	23.91	20.06	1.46	22.70	19.54	1.65	21.41	18.97	1.87	20.19	20.19	2.12	18.95	18.95	2.41	17.58	17.58	2.76
	63	24.46	16.28	1.47	23.21	15.77	1.66	21.87	15.23	1.87	20.42	14.65	2.12	18.85	14.03	2.41	17.14	13.36	2.75
	67	26.63	16.96	1.48	25.29	16.45	1.67	23.85	15.90	1.89	22.28	15.32	2.14	20.58	14.69	2.43	18.72	14.02	2.77
	72	29.67	13.86	1.51	28.20	13.35	1.70	26.61	12.81	1.91	24.89	12.23	2.16	23.01	11.60	2.45	20.96	10.93	2.79
850	57	24.45	24.45	1.48	23.43	23.43	1.67	22.33	22.33	1.89	21.11	21.11	2.14	19.80	19.80	2.44	18.32	18.32	2.78
	62	24.61	21.68	1.48	23.43	23.43	1.67	22.33	22.33	1.89	21.12	21.12	2.14	19.80	19.80	2.44	18.32	18.32	2.78
	63	25.11	17.42	1.49	23.80	16.89	1.68	22.39	16.34	1.89	20.88	15.74	2.14	19.24	15.10	2.43	17.46	14.42	2.77
	67	27.33	18.17	1.50	25.92	17.64	1.69	24.40	17.08	1.91	22.76	16.48	2.15	20.99	15.84	2.44	19.06	15.15	2.78
	72	30.44	14.64	1.53	28.89	14.12	1.71	27.21	13.55	1.93	25.40	12.96	2.17	23.45	12.33	2.46	21.30	11.65	2.80

See page 18 for cooling notes.

PERFORMANCE DATA-STANDARD ECM INDOOR MOTOR

Cooling Extended Performance Table

48XL042 High Cool

EVAPORATOR AIR		CONDENSER ENTERING AIR TEMPERATURES deg F (°C)																	
		75 (23.8)			85 (29.4)			95 (35)			105 (40.5)			115 (46.1)			125 (51.6)		
CFM	EWB	Capacity MBtuh		Total System KW	Capacity MBtuh		Total System KW	Capacity MBtuh		Total System KW	Capacity MBtuh		Total System KW	Capacity MBtuh		Total System KW	Capacity MBtuh		Total System KW
		Total	Sens		Total	Sens		Total	Sens		Total	Sens		Total	Sens		Total	Sens	
1225	57	40.34	40.34	2.76	38.56	38.56	3.03	36.60	36.60	3.32	35.21	35.21	3.58	32.79	32.79	3.93	29.04	29.04	4.37
	62	41.24	37.05	2.77	39.06	36.02	3.04	36.71	36.39	3.33	35.21	35.21	3.57	32.79	32.79	3.93	29.04	29.04	4.37
	63	42.00	29.94	2.78	39.74	28.96	3.05	37.29	27.90	3.34	35.56	27.16	3.58	32.52	25.89	3.92	28.29	24.13	4.35
	67	45.04	30.93	2.84	42.59	29.93	3.10	39.90	28.85	3.39	38.03	28.11	3.63	34.81	26.85	3.98	30.12	25.04	4.40
	72	49.21	24.77	2.91	46.48	23.77	3.17	43.50	22.69	3.46	44.33	22.99	3.52	41.24	21.88	3.87	32.75	18.96	4.47
1400	57	41.96	41.96	2.82	40.04	40.04	3.10	37.92	37.92	3.39	36.46	36.46	3.64	33.86	33.86	4.00	29.82	29.82	4.43
	62	42.17	39.80	2.83	40.04	40.04	3.10	37.92	37.92	3.39	36.46	36.46	3.64	33.86	33.86	4.00	29.82	29.82	4.43
	63	42.81	31.90	2.84	40.45	30.89	3.10	37.88	29.81	3.39	36.05	29.03	3.63	31.99	27.35	4.03	28.59	25.92	4.40
	67	45.87	33.01	2.89	43.30	31.98	3.15	40.50	30.88	3.44	38.65	30.16	3.69	35.36	28.88	4.03	30.38	26.96	4.45
	72	50.09	26.04	2.96	47.23	25.02	3.23	44.13	23.92	3.51	45.09	24.26	3.58	41.83	23.12	3.93	32.98	20.13	4.51

48XL042 Low Cool

EVAPORATOR AIR		CONDENSER ENTERING AIR TEMPERATURES deg F (°C)																	
		75 (23.8)			85 (29.4)			95 (35)			105 (40.5)			115 (46.1)			125 (51.6)		
CFM	EWB	Capacity MBtuh		Total System KW	Capacity MBtuh		Total System KW	Capacity MBtuh		Total System KW	Capacity MBtuh		Total System KW	Capacity MBtuh		Total System KW	Capacity MBtuh		Total System KW
		Total	Sens		Total	Sens		Total	Sens		Total	Sens		Total	Sens		Total	Sens	
855	57	28.20	28.20	1.89	27.00	27.00	2.11	25.67	25.67	2.35	24.16	24.16	2.63	22.43	22.43	2.94	20.50	20.50	3.29
	62	28.99	24.09	1.89	27.46	23.43	2.11	26.46	22.99	2.31	24.16	24.16	2.63	22.43	22.43	2.94	20.48	20.48	3.29
	63	29.61	19.56	1.89	28.04	18.92	2.11	26.32	18.23	2.35	24.41	17.47	2.63	22.29	16.64	2.95	19.93	15.73	3.30
	67	32.05	20.31	1.89	30.33	19.65	2.11	28.43	18.94	2.35	26.33	18.16	2.62	23.99	17.30	2.92	21.52	16.42	3.28
	72	35.41	16.51	1.89	33.47	15.84	2.10	31.36	15.12	2.34	31.76	15.26	2.28	26.40	13.49	2.90	24.07	12.74	3.25
975	57	29.53	29.53	1.90	28.23	28.23	2.12	26.78	26.78	2.36	25.14	25.14	2.64	23.27	23.27	2.95	21.29	21.29	3.29
	62	29.77	25.99	1.90	28.23	28.23	2.12	26.78	26.78	2.36	25.14	25.14	2.64	23.27	23.27	2.95	21.29	21.29	3.29
	63	30.34	20.89	1.90	28.69	20.23	2.12	26.88	19.52	2.37	24.87	18.73	2.64	22.66	17.88	2.96	20.20	16.93	3.31
	67	32.81	21.71	1.91	31.00	21.04	2.12	29.00	20.30	2.36	28.00	19.93	2.59	24.36	18.62	2.93	21.97	17.76	3.29
	72	36.21	17.40	1.91	34.17	16.72	2.12	31.95	16.00	2.35	31.03	15.68	2.58	30.23	15.42	2.60	24.42	13.57	3.26

See page 18 for cooling notes.

PERFORMANCE DATA-STANDARD ECM INDOOR MOTOR

Cooling Extended Performance Table

48XL048 High Cool

EVAPORATOR AIR		CONDENSER ENTERING AIR TEMPERATURES deg F (°C)																	
		75 (23.8)			85 (29.4)			95 (35)			105 (40.5)			115 (46.1)			125 (51.6)		
CFM	EWB	Capacity MBtuh		Total System KW	Capacity MBtuh		Total System KW	Capacity MBtuh		Total System KW	Capacity MBtuh		Total System KW	Capacity MBtuh		Total System KW	Capacity MBtuh		Total System KW
		Total	Sens		Total	Sens		Total	Sens		Total	Sens		Total	Sens		Total	Sens	
1400	57	44.39	44.39	3.40	42.70	42.70	3.71	40.87	40.87	4.05	38.88	38.88	4.43	36.67	36.67	4.84	34.16	34.16	5.30
	62	45.43	38.20	3.41	43.33	37.29	3.72	41.11	36.31	4.05	38.87	38.87	4.43	36.67	36.67	4.84	35.30	35.30	4.84
	63	46.29	30.85	3.42	44.11	29.95	3.73	41.79	29.00	4.06	39.28	28.00	4.43	36.54	26.91	4.84	33.51	25.73	5.29
	67	50.04	32.01	3.46	47.71	31.11	3.77	45.21	30.16	4.11	42.50	29.14	4.48	41.00	28.60	4.43	36.24	26.85	5.34
	72	55.24	25.88	3.53	52.68	24.98	3.84	49.93	24.04	4.18	46.96	23.04	4.55	45.43	22.53	4.52	40.04	20.75	5.41
1600	57	46.32	46.32	3.48	44.10	44.10	3.79	42.54	42.54	4.13	40.41	40.41	4.51	38.04	38.04	4.92	36.62	36.62	4.93
	62	46.57	41.09	3.48	44.43	44.43	3.79	42.54	42.54	4.13	41.40	41.40	4.51	38.04	38.04	4.92	36.61	36.61	4.93
	63	47.25	32.81	3.49	44.97	31.89	3.80	42.55	30.92	4.13	39.95	29.90	4.50	37.11	28.80	4.91	33.97	27.59	5.36
	67	51.07	34.10	3.53	48.62	33.18	3.84	46.00	32.20	4.18	43.19	31.17	4.55	40.12	30.06	4.96	38.36	29.43	4.97
	72	56.36	27.17	3.60	53.67	26.25	3.91	50.80	25.29	4.25	47.69	24.26	4.62	44.30	23.15	5.03	42.55	22.59	5.06

48XL048 Low Cool

EVAPORATOR AIR		CONDENSER ENTERING AIR TEMPERATURES deg F (°C)																	
		75 (23.8)			85 (29.4)			95 (35)			105 (40.5)			115 (46.1)			125 (51.6)		
CFM	EWB	Capacity MBtuh		Total System KW	Capacity MBtuh		Total System KW	Capacity MBtuh		Total System KW	Capacity MBtuh		Total System KW	Capacity MBtuh		Total System KW	Capacity MBtuh		Total System KW
		Total	Sens		Total	Sens		Total	Sens		Total	Sens		Total	Sens		Total	Sens	
965	57	31.49	31.49	2.22	30.30	30.30	2.49	29.02	29.02	2.78	27.63	27.63	3.12	26.10	26.10	3.51	24.40	24.40	3.96
	62	32.49	27.41	2.21	30.96	26.74	2.48	29.34	26.03	2.78	27.64	27.57	3.12	26.10	26.10	3.51	24.40	24.40	3.97
	63	33.19	22.28	2.21	31.62	21.62	2.48	29.95	20.92	2.78	28.14	20.18	3.12	26.19	19.39	3.52	24.04	18.53	3.97
	67	36.14	23.21	2.21	34.45	22.54	2.47	32.65	21.84	2.77	30.72	21.10	3.10	28.62	20.30	3.49	26.31	19.44	3.94
	72	40.19	19.02	2.21	38.34	18.36	2.46	36.37	17.67	2.75	34.25	16.93	3.08	31.95	16.14	3.46	29.40	15.29	3.90
1100	57	33.04	33.04	2.24	31.76	31.76	2.50	30.39	30.39	2.80	28.90	28.90	3.13	27.27	27.27	3.52	25.45	25.45	3.97
	62	33.42	29.57	2.23	31.85	28.86	2.50	30.39	30.39	2.80	28.90	28.90	3.13	27.27	27.27	3.52	25.45	25.45	3.97
	63	34.05	23.76	2.23	32.40	23.08	2.50	30.64	22.37	2.80	28.77	21.61	3.14	26.73	20.81	3.53	24.50	19.92	3.99
	67	37.06	24.78	2.23	35.29	24.10	2.49	33.40	23.38	2.78	31.39	22.62	3.12	29.20	21.81	3.51	26.79	20.93	3.95
	72	41.21	20.03	2.23	39.26	19.35	2.48	37.19	18.64	2.77	34.96	17.88	3.10	32.54	17.07	3.48	29.89	16.19	3.92

See page 18 for cooling notes.

PERFORMANCE DATA-STANDARD ECM INDOOR MOTOR

Cooling Extended Performance Table

48XL060 High Cool

EVAPORATOR AIR		CONDENSER ENTERING AIR TEMPERATURES deg F (°C)																	
		75 (23.8)			85 (29.4)			95 (35)			105 (40.5)			115 (46.1)			125 (51.6)		
CFM	EWB	Capacity MBtuh		Total System KW	Capacity MBtuh		Total System KW	Capacity MBtuh		Total System KW	Capacity MBtuh		Total System KW	Capacity MBtuh		Total System KW	Capacity MBtuh		Total System KW
		Total	Sens		Total	Sens		Total	Sens		Total	Sens		Total	Sens		Total	Sens	
2000	57	58.24	58.24	4.41	55.10	55.10	4.84	54.80	54.80	4.69	52.40	52.40	5.23	46.70	46.70	6.40	42.90	42.90	7.02
	62	58.46	54.46	4.42	55.79	55.79	4.84	55.36	55.36	4.69	52.73	52.73	5.23	46.94	46.94	6.40	43.20	43.20	7.02
	63	59.23	43.33	4.42	56.27	42.07	4.85	55.68	41.83	4.69	52.48	40.49	5.22	45.80	37.74	6.37	41.56	36.02	6.97
	67	63.56	44.86	4.50	60.35	43.59	4.92	56.88	42.24	5.38	56.62	42.14	5.33	48.97	39.21	6.44	44.37	37.49	7.05
	72	69.55	35.33	4.59	66.01	34.07	5.02	62.20	32.73	5.48	58.07	31.30	5.99	53.51	29.74	6.54	48.46	28.03	7.15
1750	57	56.01	56.01	4.29	53.76	53.76	4.72	51.30	51.30	5.19	50.80	50.80	5.08	45.20	45.20	6.27	41.70	41.70	6.89
	62	57.19	50.62	4.31	54.45	49.37	4.73	51.51	48.01	5.19	50.93	47.74	5.08	45.50	45.50	6.27	41.99	41.99	6.89
	63	58.18	40.75	4.32	55.35	39.51	4.74	52.28	38.20	5.20	51.66	37.95	5.10	45.27	35.27	6.26	41.16	33.59	6.87
	67	62.48	42.11	4.39	59.41	40.86	4.81	57.00	39.90	5.18	55.71	39.39	5.21	48.47	36.58	6.34	44.00	34.88	6.94
	72	68.41	33.69	4.48	65.01	32.46	4.91	61.35	31.14	5.37	57.37	29.72	5.88	52.97	28.19	6.44	48.09	26.53	7.04

48XL060 Low Cool

EVAPORATOR AIR		CONDENSER ENTERING AIR TEMPERATURES deg F (°C)																	
		75 (23.8)			85 (29.4)			95 (35)			105 (40.5)			115 (46.1)			125 (51.6)		
CFM	EWB	Capacity MBtuh		Total System KW	Capacity MBtuh		Total System KW	Capacity MBtuh		Total System KW	Capacity MBtuh		Total System KW	Capacity MBtuh		Total System KW	Capacity MBtuh		Total System KW
		Total	Sens		Total	Sens		Total	Sens		Total	Sens		Total	Sens		Total	Sens	
1200	57	39.88	39.88	2.70	38.34	38.34	3.04	36.64	36.64	3.43	34.74	34.74	3.87	31.90	31.90	4.37	29.70	29.70	4.94
	62	40.94	35.96	2.69	39.01	35.09	3.04	36.90	34.14	3.43	34.90	34.90	3.87	32.60	32.60	4.37	30.16	30.16	4.94
	63	41.76	29.14	2.69	39.78	28.27	3.04	37.61	27.34	3.42	35.23	26.33	3.87	32.61	25.22	4.37	29.69	24.04	4.96
	67	45.04	30.17	2.68	42.87	29.29	3.02	40.50	28.35	3.40	37.91	27.31	3.84	35.04	26.21	4.33	31.84	25.00	4.90
	72	49.59	24.40	2.68	47.18	23.52	3.01	44.52	22.56	3.38	41.68	21.55	3.80	38.47	20.43	4.28	34.93	19.21	4.84
1370	57	41.69	41.69	2.72	40.00	40.00	3.07	37.90	37.90	3.45	35.45	35.45	3.89	33.62	33.62	4.38	30.90	30.90	4.95
	62	41.98	38.83	2.72	40.02	40.02	3.07	38.18	38.18	3.45	36.13	36.13	3.89	33.82	33.82	4.38	31.19	31.19	4.95
	63	42.72	31.09	2.72	40.63	30.20	3.07	38.35	29.24	3.45	35.86	28.21	3.89	33.13	27.09	4.40	30.10	25.87	4.98
	67	46.03	32.23	2.72	43.75	31.34	3.05	41.27	30.36	3.43	38.55	29.32	3.86	35.56	28.18	4.36	32.25	26.93	4.92
	72	50.62	25.68	2.71	48.09	24.78	3.04	45.37	23.83	3.41	42.32	22.77	3.83	39.01	21.64	4.31	35.34	20.40	4.86

See page 18 for cooling notes.

PERFORMANCE DATA (CONT)

LEGEND
BF — Bypass Factor
edb — Entering Dry–Bulb
Ewb — Entering Wet–Bulb
kW — Total Unit Power Input
ldb — Leaving Dry–Bulb
lwb — Leaving Wet–Bulb
SHC — Sensible Heat Capacity (1000 Btuh)
TC — Total Capacity (1000 Btuh) (net)
ECM — Electronic Computated Motor

*At 75°F (23.8°C) entering dry bulb (Tennessee Valley Authority [TVA] rating conditions); all other at 80°F (26.6°C) entering dry bulb.

NOTES:
1. Ratings are net; they account for the effects of the evaporator–fan motor power and heat.
2. Direct interpolation is permissible. Do not extrapolate.
3. The following formulas may be used:

$$^{t}ldb = {}^{t}edb - \frac{\text{Sensible capacity (Btuh)}}{1.10 \times \text{cfm}}$$

^{t}lwb = Wet–bulb temperature corresponding to enthalpy air leaving evaporator coil (^{h}lwb)

$$^{h}lwb = {}^{h}ewb - \frac{\text{total capacity (Btuh)}}{4.5 \times \text{cfm}}$$

Where: ^{h}ewb = Enthalpy of air entering evaporator coil

4. The SHC is based on 80°F (26.6°C) edb temperature of air entering evaporator coil. Below 80° F (26.6°C) edb, subtract (corr factor x cfm) from SHC.

Above 80° F (26.6°C) edb, add (corr factor x cfm) to SHC.
Correction Factor = 1.10 x (1 + BF) x (edb + 80).

48XL

HIGH ALTITUDE COMPENSATION

Nameplate Input, High Stage (Btu/hr)	Rated Heating Input (Btu/hr), LP Gas at Installation Altitude Above Sea Level, U.S.A.*									
	0 to 2000 ft		2001 to 3000 ft*		3001 to 4000 ft		4001 to 5000 ft		5001 to 6000 ft	
	High Stage	Low Stage	High Stage	Low Stage	High Stage	Low Stage	High Stage	Low Stage	High Stage	Low Stage
40000	38000	26000	31700	23400	31700	22300	31700	21300	31200	20300
60000	57000	39000	47500	35100	47500	33500	47500	32000	46800	30400
90000	79000	58500	68900	52700	68900	50300	68600	48000	68600	45600
115000	103000	75000	100400	67500	98900	64500	83000	61500	83000	58500
130000	116000	84500	115500	76100	111800	72700	101300	69300	100400	65900

* For Canadian Installations from 2000 to 4500 ft, use U.S.A. column 2001 to 3000 ft.

Nameplate Input, High Stage (Btu/hr)	Rated Heating Input (Btu/hr), Natural Gas at Installation Altitude Above Sea Level, U.S.A.*									
	0 to 2000 ft		2001 to 3000 ft*		3001 to 4000 ft		4001 to 5000 ft		5001 to 6000 ft	
	High Stage	Low Stage	High Stage	Low Stage	High Stage	Low Stage	High Stage	Low Stage	High Stage	Low Stage
40000	40000	26000	36000	23400	34400	22300	32800	21300	31200	20300
60000	60000	39000	54000	35100	51600	33500	49200	32000	46800	30400
90000	90000	58500	81000	52700	77400	50300	73800	48000	70200	45600
115000	115000	75000	103500	67500	98900	64500	94300	61500	89700	58500
130000	130000	84500	117000	76100	111800	72700	106600	69300	101400	65900

* For Canadian Installations from 2000 to 4500 ft, use U.S.A. column 2001 to 3000 ft.

WET COIL AIR DELIVERY - LOW STAGE

208/230 VOLT											
UNIT SIZE	SYSTEM SETTING	EXTERNAL STATIC PRESSURE (in. wc)									
		0.1	0.2	0.3	0.4	0.5	0.6	0.7	0.8	0.9	1.0
024	COMFORT (Default)	Variable based on Comfort Settings									
	EFFICIENCY	525	525	525	525	525	525	525	525	525	525
	MAX	600	600	600	600	600	600	600	600	600	600
030	COMFORT (Default)	Variable based on Comfort Settings									
	EFFICIENCY	613	613	613	613	613	613	613	613	613	613
	MAX	700	700	700	700	700	700	700	700	700	700
036	COMFORT (Default)	Variable based on Comfort Settings									
	EFFICIENCY	743	743	743	743	743	743	743	743	743	743
	MAX	850	850	850	850	850	850	850	850	850	850
042	COMFORT (Default)	Variable based on Comfort Settings									
	EFFICIENCY	853	853	853	853	853	853	853	853	853	853
	MAX	975	975	975	975	975	975	975	975	975	975
048	COMFORT (Default)	Variable based on Comfort Settings									
	EFFICIENCY	963	963	963	963	963	963	963	963	963	963
	MAX	1100	1100	1100	1100	1100	1100	1100	1100	1100	1100
060	COMFORT (Default)	Variable based on Comfort Settings									
	EFFICIENCY	1200	1200	1200	1200	1200	1200	1200	1200	1200	1200
	MAX	1372	1372	1372	1372	1372	1372	1372	1372	1372	1372

WET COIL AIR DELIVERY - HIGH STAGE

208/230 VOLT											
UNIT SIZE	SYSTEM SETTING	EXTERNAL STATIC PRESSURE (in. wc)									
		0.1	0.2	0.3	0.4	0.5	0.6	0.7	0.8	0.9	1.0
024	COMFORT (Default)	Variable based on Comfort Settings									
	EFFICIENCY	700	700	700	700	700	700	700	700	700	700
	MAX	800	800	800	800	800	800	800	800	800	800
030	COMFORT (Default)	Variable based on Comfort Settings									
	EFFICIENCY	875	875	875	875	875	875	875	875	875	875
	MAX	1000	1000	1000	1000	1000	1000	1000	1000	1000	1000
036	COMFORT (Default)	Variable based on Comfort Settings									
	EFFICIENCY	1050	1050	1050	1050	1050	1050	1050	1050	1050	1050
	MAX	1200	1200	1200	1200	1200	1200	1200	1200	1200	1200
042	COMFORT (Default)	Variable based on Comfort Settings									
	EFFICIENCY	1225	1225	1225	1225	1225	1225	1225	1225	1225	1225
	MAX	1400	1400	1400	1400	1400	1400	1400	1400	1400	1400
048	COMFORT (Default)	Variable based on Comfort Settings									
	EFFICIENCY	1400	1400	1400	1400	1400	1400	1400	1400	1400	1400
	MAX	1600	1600	1600	1600	1600	1600	1600	1600	1600	1600
060	COMFORT (Default)	Variable based on Comfort Settings									
	EFFICIENCY	1750	1750	1750	1750	1750	1750	1750	1750	1750	1750
	MAX	2000	2000	2000	2000	2000	2000	2000	2000	2000	2000

Air delivery values are based on operating voltage of 230v, and wet coil. Filter and electric heater will not change air delivery values.

NOTES:

1. See User Interface instructions for more information on Max, Efficiency, and Comfort Settings
2. Efficiency Setting operates at 350 cfm/ton (nominal) and Max Setting operates at 400 cfm/ton (nominal)

TYPICAL PIPING AND WIRING

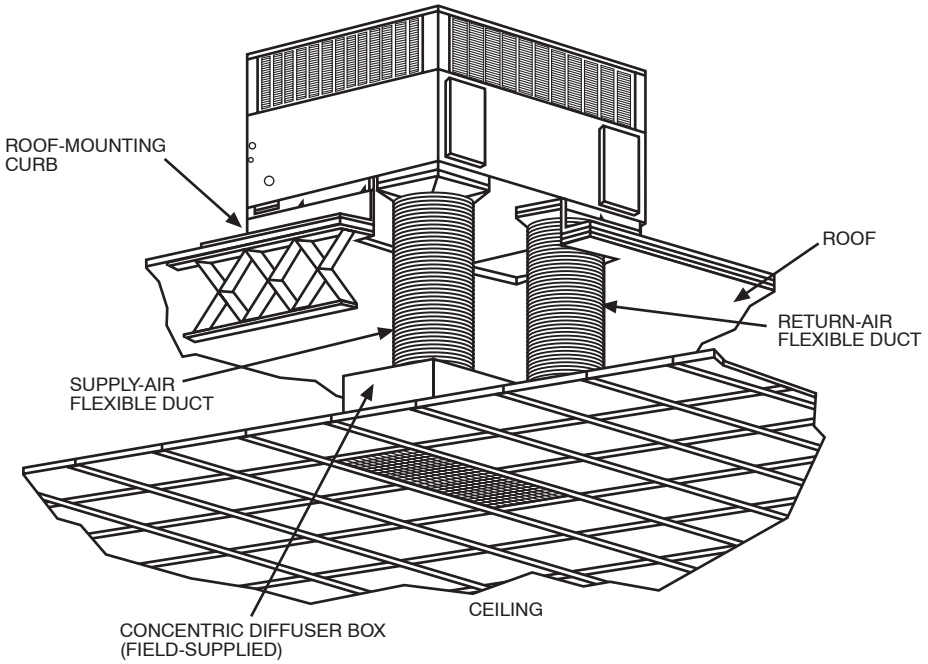

C00023

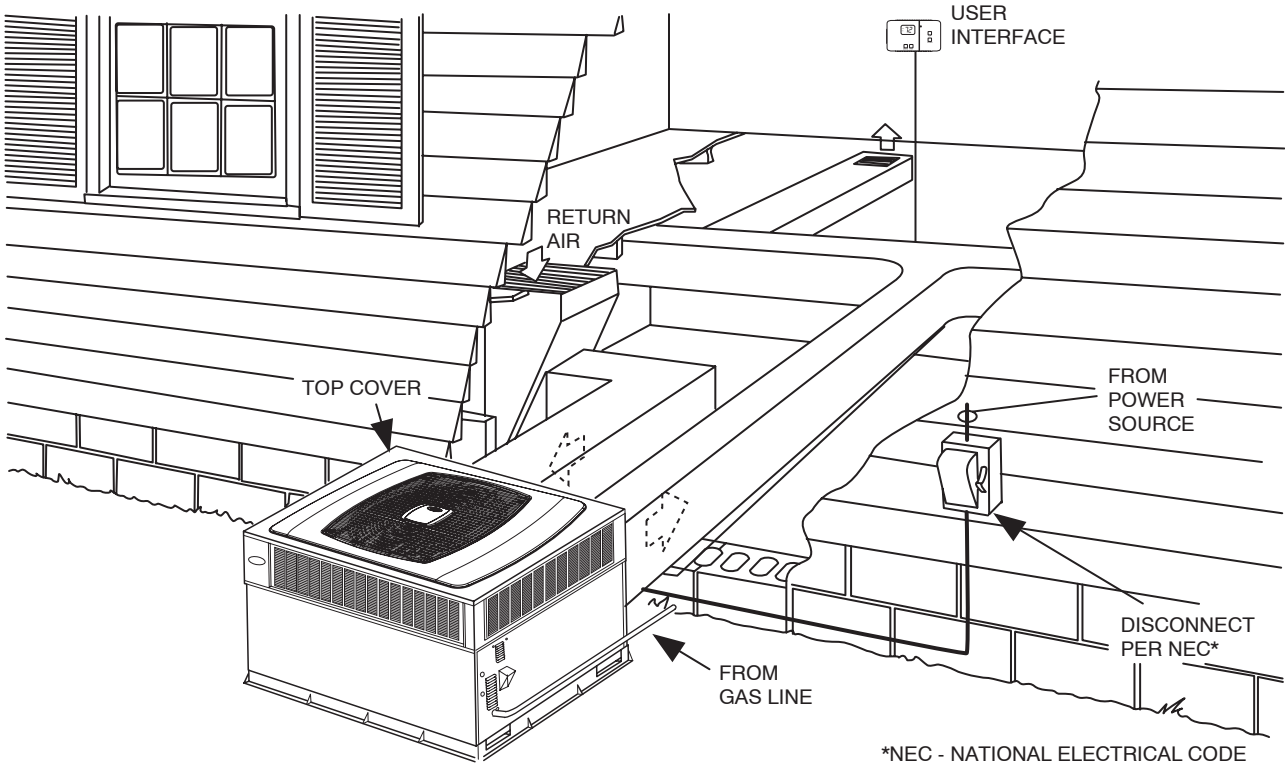

A06091

APPLICATION DATA

Condensate trap — A 2-in. condensate trap must be field supplied.

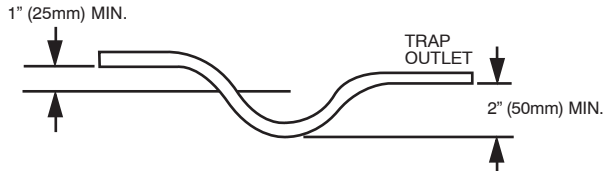

Ductwork — Secure downflow discharge ductwork to roof curb. For horizontal discharge applications, attach ductwork to unit with flanges.

To convert a unit to downflow discharge — Units are equipped with factory-installed inserts in the downflow openings. Remove the inserts similar to removing an electrical knock-out. Leave on duct covers to seal the horizontal discharge openings in the unit. Units installed in horizontal discharge orientation do not require duct covers.

Minimum cooling ambient operating temperature — All standard units have a minimum ambient operating temperature of 55°F (12.7°C). With accessory low-ambient temperature kit, units can operate at temperatures down to 0°F (-17.7°C).

Maximum operating outdoor air temperature — Maximum outdoor operating air temperature for cooling is 125°F (51.6°C).

48XL

ELECTRICAL DATA

UNIT SIZE	V-PH-HZ	VOLTAGE RANGE		COMPRESSOR		OUTDOOR FAN MOTOR	INDOOR FAN MOTOR	POWER SUPPLY	
		Min	Max	RLA	LRA	FLA	FLA	MCA	MOCP
024	208/230–1–60	187	253	10.3	52.0	0.9	4.3	18.0/18.0	25/25
030	208/230–1–60	187	253	14.1	70.0	0.9	4.3	22.8/22.8	35/35
036	208/230–1–60	187	253	16.7	82.0	0.9	6.8	28.5/28.5	45/45
042	208/230–1–60	187	253	16.7	96.0	0.9	6.8	28.5/28.5	45/45
048	208/230–1–60	187	253	21.2	96.0	1.5	6.8	34.7/34.7	50/50
060	208/230–1–60	187	253	25.6	118.0	1.9	9.1	43.1/43.1	60/60

LEGEND

FLA — Full Load Amps
LRA — Locked Rotor Amps
MCA -- Minimum Circuit Amps
MOCP — Maximum Overcurrent Protection
RLA — Rated Load Amps

NOTES:

1. In compliance with NEC (National Electrical Code) requirements for multimotor and combination load equipment (refer to NEC Articles 430 and 440), the overcurrent protective device for the unit shall be Power Supply fuse. The CGA (Canadian Gas Association) units may be fuse or circuit breaker.
2. Minimum wire size is based on 60 C copper wire. If other than 60 C wire is used, or if length exceeds wire length in table, determine size from NEC.
3. Unbalanced 3-Phase Supply Voltage
   Never operate a motor where a phase imbalance in supply voltage is greater than 2%. Use the following formula to determine the percentage of voltage imbalance

   % Voltage imbalance

   $$= 100 \times \frac{\text{max voltage deviation from average voltage}}{\text{average voltage}}$$

* Heater capacity (kW) based on heater voltage of 208v & 240v. If power distibution voltage to unit varies from rated heater voltage, heater kW will vary accordingly.

EXAMPLE: Supply voltage is 230-3-60.

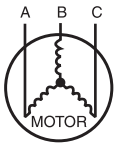

AB = 228 v
BC = 231 v
AC = 227 v

$$\text{Average Voltage} = \frac{228 + 231 + 227}{3} = \frac{686}{3} = 229$$

Determine maximum deviation from average voltage.
(AB) 229 - 228 = 1 v
(BC) 231 - 229 = 2 v
(AC) 229 - 227 = 2 v

Maximum deviation is 2 v.

Determine percent of voltage imbalance

$$\% \text{ Voltage Imbalance} = 100 \times \frac{2}{229} = 0.8\%$$

This amount of phase imbalance is satisfactory as it is below the maximum allowable 2%.

IMPORTANT: If the supply voltage phase imbalance is more than 2%, contact your local electric utility company immediately.

TYPICAL WIRING SCHEMATIC—208/230-1-60

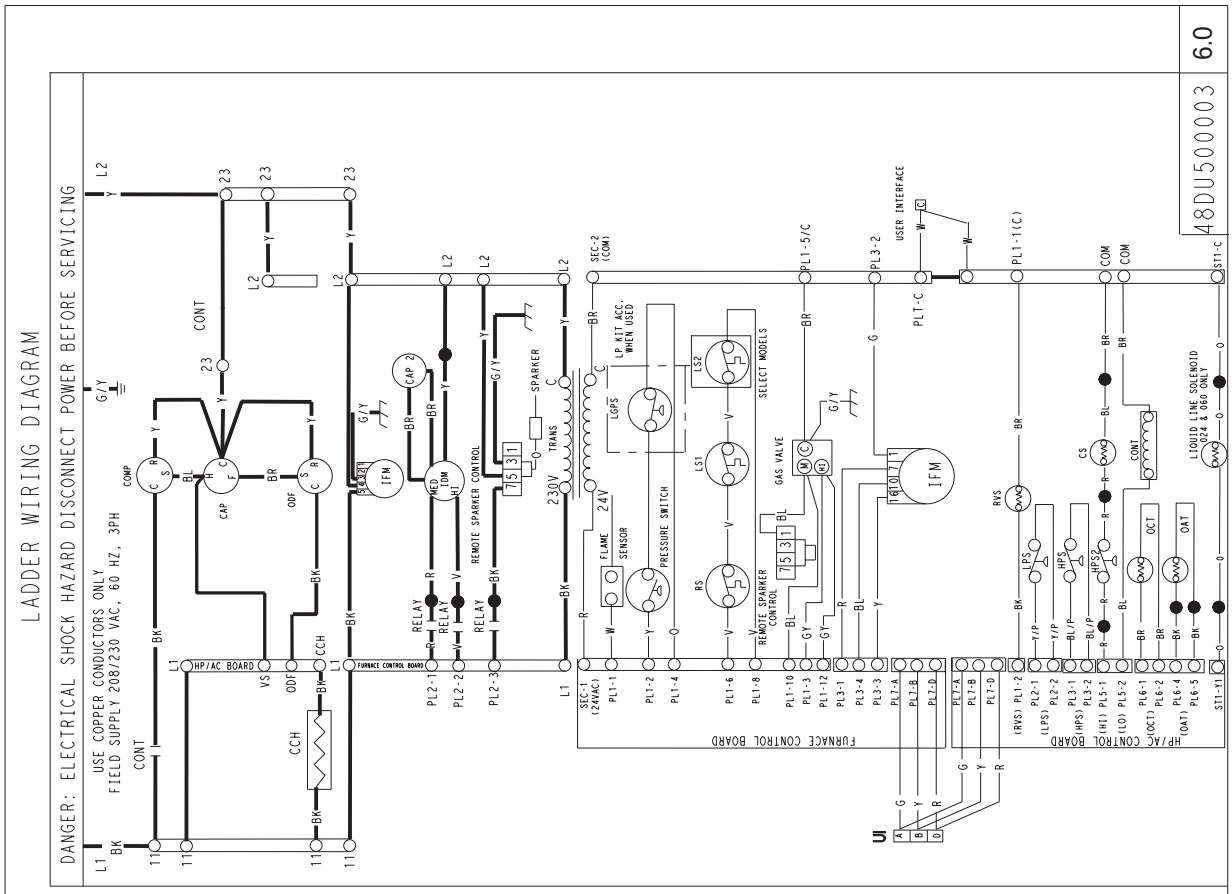

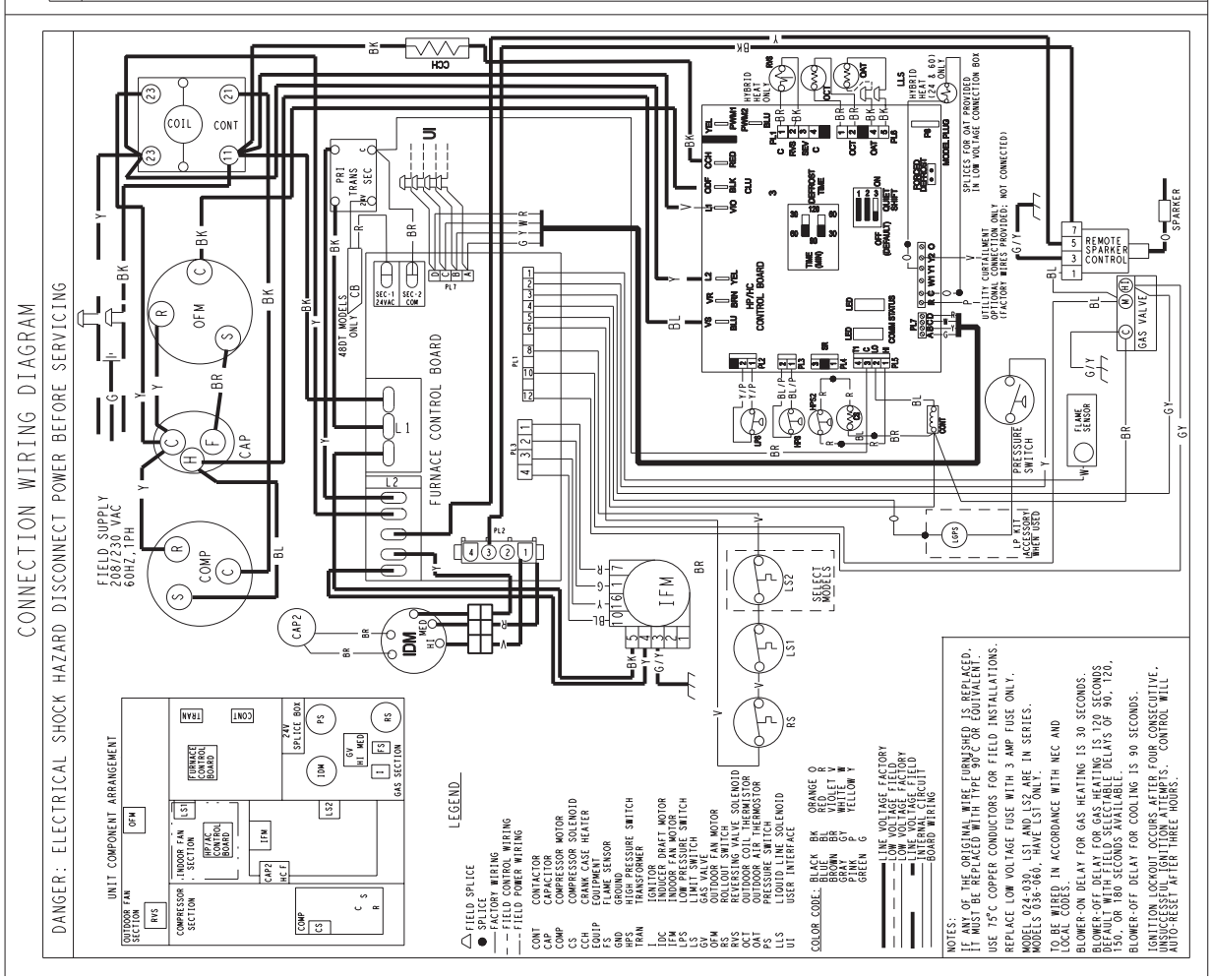

A06310

Sequence of Operation

Cooling Operation—With a call for first stage cooling, the outdoor fan and low-stage compressor are energized. If low-stage cannot satisfy cooling demand, high-stage is energized by the User Interface. After second stage is satisfied, the unit returns to low-stage operation until first stage is satisfied or until second stage is required again. When both first stage and second stage cooling are satisfied, the compressor will shut off.

NOTE: When two-stage unit is operating at low stage, system vapor (suction) pressure will be higher than a standard single-stage system or high-stage operation.

Gas Heat Mode and Adjustments—When the UI calls for gas heat, the Infinity furnace board performs a self-check, verifies the pressure switch is open, and starts the inducer on high speed.

1. Inducer Pre-purge Period: When the inducer motor comes up on high speed, the pressure switch closes, and the Infinity ignition control on the furnace board begins a 15 sec pre-purge period. If the pressure switch fails to remain closed, the inducer will remain running. After the pressure switch re-closes, the Infinity ignition control will begin a 15 sec pre-purge period.
2. Trial-For-Ignition Sequence: The spark igniter will spark for 3 sec. The main gas valve relay contact closes to energize the gas valve on low stage. After 5 sec, the igniter is de-energized and a 2-sec flame-proving period begins. NOTE: The unit always lights on high speed inducer and low stage gas valve operation.
3. Flame-Proving: When the burner flame is proved at the flame-proving sensor, the furnace control determines what heating stage to run based on feedback from the UI. If the UI is asking for low stage gas heat, the ignition control will change the inducer speed to low speed and keep the gas valve energized on low stage. If the UI is asking for high stage gas heat, the ignition control will maintain running the inducer on high speed and energize the gas valve's high stage relay to increase gas flow.

If the burner flame is not proved within 2 sec, the control will close the gas valve and repeat the ignition sequence up to 3 more Trials-For-Ignition before going to Ignition-Lockout. Lockout will reset automatically after 3 hrs, by momentarily interrupting 230 VAC power, or by interrupting 24 VAC power at SEC1 or SEC2 to the furnace board.

If flame is proved when there should be no flame present, control will lock out of Gas-Heating mode and operate the inducer motor until flame is no longer proved.

GUIDE SPECIFICATIONS

SINGLE-PACKAGED GAS HEATING/ELECTRIC COOLING UNITS CONSTANT VOLUME APPLICATION

HVAC GUIDE SPECIFICATIONS

SIZE RANGE: 2 TO 5 TONS, NOMINAL (COOLING)
40,000 to 130,000 Btuh
Nominal Heating Input

MODEL NUMBER: 48XL

PART I - GENERAL

SYSTEM DESCRIPTION

Outdoor rooftop or ground mounted gas heating/electric cooling unit utilizing a two-stage scroll compressor for cooling duty. Unit shall discharge supply air vertically or horizontally as shown on contract drawings. Outdoor fan/coil section shall have a draw-thru design with vertical discharge for minimum sound levels.

QUALITY ASSURANCE

A. Unit shall be rated in accordance with ARI Standards 210/240, and 270.

B. Unit shall be designed in accordance with UL Standard 1995 and ANSI Z21.47-2003.

C. Unit shall be manufactured in a facility registered to ISO 9001 manufacturing quality standard.

D. Unit shall be UL listed and c-UL certified as a total package for safety requirements.

E. Roof curb shall be designed to conform to NRCA Standards.

F. Insulation and adhesives shall meet NFPA 90A requirements for flame spread and smoke generation.

G. Cabinet insulation shall meet ASHRAE Standard 62P.

DELIVERY, STORAGE, AND HANDLING

Unit shall be stored and handled per manufacturer's recommendations.

PART 2- PRODUCTS

EQUIPMENT

A. General:

Factory-assembled, single-piece, heating and cooling unit. Contained within the unit enclosure shall be all factory wiring, piping, controls, refrigerant charge (R-410A), and special features required prior to field start-up.

B. Unit Cabinet:

1. Unit cabinet shall be constructed of phosphated, zinc-coated, prepainted steel capable of withstanding 500 hrs of salt spray.
2. Normal service shall be through a single removable cabinet panel.
3. The unit shall be constructed on a rust proof unit base that has an externally trapped, integrated sloped drain pan.
4. Indoor fan compartment top surface shall be insulated with a minimum 1/2-in. thick, flexible fiberglass insulation, coated on the air side and retained by adhesive and mechanical means. The indoor wall sections will be insulated with a foil-faced insulation capable of being wiped clean. Aluminum foil-faced fiberglass insulation shall be used in the entire indoor air cavity seciton.
5. Unit shall have a field-supplied condensate trap.

C. Fans:

1. The indoor fan shall be direct-drive, variable-speed motor and control, as shown on equipment drawings.
2. Fan wheel shall be made from steel, be double-inlet type. It shall have forward-curved blades with a corrosion-resistant finish and shall be dynamically balanced.
3. Outdoor fan shall be of the direct-driven propeller type with aluminum blades, riveted to corrosion-resistant steel spiders. It shall be dynamically balanced, and discharge air vertically.

D. Compressor:

1. Fully hermetic 2-stage compressors with factory-installed vibration isolation.
2. Two-stage scroll compressors shall be standard on all units.

E. Coils:

1. Indoor and outdoor coils shall have aluminum plate fins mechanically bonded to seamless copper tubes with all joints brazed.
2. Tube sheet openings shall be bellied to prevent tube wear.

F. Heating Section:

1. Induced-draft combustion type with energy saving direct spark ignition system and redundant main gas valve.
2. Pressure switch ensures adequate airflow for combustion from induced draft motor.
3. The heat exchangers shall be constructed of 409 stainless steel for corrosion resistance.
4. Burners shall be of the in-shot type constructed of aluminum coated steel.
5. All gas piping and electric power shall enter the unit cabinet at a single location.

G. Refrigerant Metering Device:

Refrigerant metering device shall be of the TXV (thermostatic expansion valve) type.

H. Filters:

Filter section shall consist of field-installed, throw-away, 1-in. thick fiberglass filters of commercially available sizes.

I. Controls and Safeties:

1. Unit controls shall be complete with self-contained low voltage control circuit.
2. Units shall incorporate an internal compressor protector that provides reset capability.
3. Unit shall provide high and low/loss-of-charge pressure safety protection.

J. Operating Characteristics:

1. Unit shall be capable of starting and running at 125°F (51.6°C) ambient outdoor temperature, exceeding maximum load criteria of ARI Standard 210.
2. Compressor with standard controls shall be capable of operation down to 55°F (12.7°C) ambient outdoor temperature. Low ambient cooling down to 0°F (-17.7°C) is possible with "low ambient cooling" enabled in the UI.
3. Units shall be provided with fan time delay to prevent cold air delivery before the heat exchanger warms up.

K. Electrical Requirements:

All unit power wiring shall enter unit cabinet at a single location.

L. Motors:

1. Compressor motors shall be of the refrigerant-cooled type with line-break thermal and current overload protection.
2. All fan motors shall have permanently lubricated bearings and inherent automatic-reset thermal overload protection.

3. Outdoor fan motor shall be totally enclosed.

M. Grille

1. Louvered Grille:
   Louvered grille shall be factory-installed to provide hail guard and vandalism protection.

N. Special Features:

1. Coil Options:
   Shall include factory-installed optional tin-plated indoor copper/copper and vinyl-coated refrigerant coils.
2. Flat Roof Curb:
   Curbs shall have seal strip and a wood nailer for flashing and shall be installed per manufacturer's instructions.
3. Manual Outdoor Air Damper:
   Package shall consist of damper, bird screen, and rain hood which can be preset to admit outdoor air for year-round ventilation.
4. Infinity™ User Interface:
   To provide for one-stage heating and cooling in addition to manual or automatic changeover and indoor fan control.
5. Natural-to-Propane Conversion Kit:
   Shall be complete with all required hardware to convert to liquid propane (LP) operation at minimum 10.0 in. wg manifold pressure.
6. Filter Rack Kit:
   Shall provide filter mounting for downflow and horizontal applications.
7. Square-To-Round Duct Transitions:
   Shall have the ability to convert the supply and return openings from rectangular to round (024-048 sizes only).
8. Crankcase Heater:
   Shall provide anti-floodback protection for low-load cooling applications.
9. High Altitude Kit:
   Shall consist of natural gas orifices to compensate for gas heat operation at 2001 to 6000 ft above sea level.
10. Low NOx (Natural Gas only) Option (48XLN Models):
    Shall provide NOx reduction to values below 40 nanograms/joule to meet California emission requirements.
11. Compressor Hard Start Kit:
    Shall be available to give a boost to the compressor motor at each start-up.

Copyright 2007 Carrier Corp. • 7310 W. Morris St. • Indianapolis, IN 46231

Printed in U.S.A. Edition Date: 05/07 **Catalog No: 48XL−3PD**

Manufacturer reserves the right to change, at any time, specifications and designs without notice and without obligations.

Replaces: 48XL−2PD