50HC
High Efficiency
Cooling Only/Electric Heat Packaged Rooftop
3 to 12.5 Nominal Tons

Carrier
turn to the experts™

Product Data

WeatherMaster®

ENERGY STAR

c UL US

Puron™
the environmentally sound refrigerant

AHRI CERTIFIED™
www.ahridirectory.org

Use of the AHRI Certified TM Mark indicates a manufacturer's participation in the program For verification of certification for individual products, go to www.ahridirectory.org.

ASHRAE 90.1 COMPLIANT

C10222

TABLE OF CONTENTS

	PAGE
FEATURES AND BENEFITS	3
MODEL NUMBER NOMENCLATURE	4
FACTORY OPTIONS AND/OR ACCESSORIES	6
AHRI COOLING RATING TABLES	8
SOUND PERFORMANCE TABLE	9
PHYSICAL DATA	10
ELECTRIC HEAT DATA	13
CURBS & WEIGHTS DIMENSIONS	22
OPTIONS AND ACCESSORY WEIGHTS	34
APPLICATION DATA	35
SELECTION PROCEDURE	36
COOLING TABLES	37
STATIC PRESSURE ADDERS	53
ECONOMIZER, BAROMETRIC RELIEF AND POWER EXHAUST PERFORMANCE	54
FAN PERFORMANCE	56
ELECTRICAL INFORMATION	74
MCA/MOCP	77
TYPICAL WIRING DIAGRAMS	93
SEQUENCE OF OPERATION	97
GUIDE SPECIFICATIONS	100

Carrier®
turn to the experts™

Your Carrier rooftop unit (RTU) was designed by customers for customers. With “no-strip” screw collars, handled access panels, and more we’ve made your unit easy to install, easy to maintain and easy to use.

Easy to install:

All WeatherMaster® units are field-convertible to horizontal air flow, which makes it easy to adjust to unexpected job-site complications. Lighter units make easy replacement. Most of Carrier’s 3-12.5 ton 50HC rooftops fit on existing Carrier curbs dating back to 1989. Also, our large control box gives you room to work and room to mount Carrier accessory controls.

Easy to maintain:

Easy access handles by Carrier provide quick and easy access to all normally serviced components. Our “no-strip” screw system has superior holding power and guides screws into position while preventing the screw from stripping the unit’s metal. Take accurate pressure readings by reading condenser pressure with panels on. Simply remove the black, composite plug, route your gauge line(s) through the hole, and connect them to the refrigeration service valve(s). Now, you can take refrigeration system pressure readings without affecting the condenser airflow.

Easy to use:

The newly designed, central terminal board by Carrier puts all your connections and troubleshooting points in one convenient place, standard. Most low voltage connections are made to the same board and make it easy to find what you’re looking for and easy to access it. Carrier rooftops have high and low pressure switches, a filter drier, and 2” (51mm) filters standard.

Carrier® Comfort System
PremierLink

FEATURES AND BENEFITS

- Single-stage cooling capacity control on 04 to 07 models
- Two-stage cooling capacity control on 08-14 models
- SEER up to 15.6
- EER up to 13.0
- IEER's up to 13.2
- Exclusive non-corrosive composite condensate pan in accordance with ASHRAE 62 Standard, sloping design; side or center drain
- Single point electrical connection
- Pre-painted exterior panels and primer-coated interior panels tested to 500 hours salt spray protection
- TXV refrigerant metering system on each circuit
- Fully insulated cabinet
- Cooling operating range up to 125°F (52°C), and down to 35°F (2°C) standard
- Access panels with easy grip handles
- Innovative , easy starting, no-strip screw feature on unit access panels
- Two-inch disposable return air filters
- Tool-less filter access door
- Belt drive evaporator-fan motor and pulley combinations available on all three phase models
- Electric Drive x13 (5 speed/torque) motor on 04 to 06 models
- New terminal board facilitating simple safety circuit troubleshooting and simplified control box arrangement
- Field Convertible airflow (3-12.5 ton). Being able to convert a unit from vertical airflow to horizontal makes it easy to overcome job site complications. 12.5 ton models require a simple supply air duct cover to field convert from factory vertical to horizontal.
- Provisions for thru-the-bottom power entry capability as standard
- Full perimeter base rail with built-in rigging adapters and fork truck slots
- Scroll compressors with internal line-break overload protection
- 24-volt control circuit protected with resettable circuit breaker
- Permanently lubricated evaporator-fan motor
- Totally enclosed condenser motors with permanently lubricated bearings
- Low Pressure switch and high-pressure switch protection
- Liquid line filter drier on each circuit
- Factory-installed Humidi-MiZer® adaptive dehumidification system.
- Standard Warranty: 5 yr. Electric heater exchanger, 5 yr compressor, 1 yr parts

MODEL NUMBER NOMENCLATURE

1	2	3	4	5	6	7	8	9	10	11	12	13	14	15	16	17	18
5	0	H	C	–	D	0	8	A	3	A	5	–	0	A	0	A	0

Unit Type
50 = Electric Heat Packaged Rooftop

Model Series – WeatherMaster
HC = High Efficiency

Heat Size
– = None (Field Installed Accessory)

Refrig. System Options
A = Single stage cooling models
B = Single stage cooling models with Humidi – Mizer
D = Two stage cooling models
E = Two stage cooling models with Humidi – Mizer

Nominal Cooling Tons

04 = 3 Ton	08 = 7.5 Ton
05 = 4 Ton	09 = 8.5 Ton
06 = 5 Ton	12 = 10 Ton
07 = 6 Ton	14 = 12.5 Ton

Sensor Options
A = None
B = RA smoke detector
C = SA smoke detector
D = RA & SA smoke detector
E = CO_2 sensor
F = RA smoke detector & CO_2
G = SA smoke detector & CO_2
H = RA & SA smoke detector & CO_2

Indoor Fan Options – 3,4,5 Ton Models Only
0 = Electric (direct) drive X13 motor
2 = Medium static option – belt drive
3 = High static option – belt drive

Indoor Fan Options – 6 – 12.5 Ton Models Only
1 = Standard static option – belt drive
2 = Medium static option – belt drive
3 = High static option – belt drive
C = High static option with High Eff Motor – Belt Drive (Size 14 Only)

Coil Options (Outdoor – Indoor – Hailguard)
A = Al/Cu – Al/Cu
B = Precoat Al/Cu – Al/Cu
C = E coat Al/Cu – Al/Cu
D = E coat Al/Cu – E coat Al/Cu
E = Cu/Cu – Al/Cu
F = Cu/Cu – Cu/Cu
M = Al/Cu – Al/Cu – Louvered Hail Guard
N = Precoat Al/Cu – Al/Cu – Louvered Hail Guard
P = Ecoat Al/Cu – Al/Cu – Louvered Hail Guard
Q = Ecoat Al/Cu – Ecoat Al/Cu – Louvered Hail Guard
R = Cu/Cu – Al/Cu – Louvered Hail Guard
S = Cu/Cu – Cu/Cu – Louvered Hail Guard

Voltage
1 = 575/3/60
3 = 208 – 230/1/60
5 = 208 – 230/3/60
6 = 460/3/60

Design Rev
– Factory design revision

Base Unit Controls
0 = Electromechanical
1 = PremierLink DDC controller
2 = RTU Open multi protocol controller

Air Intake / Exhaust Options
A = None
B = Temp econo w/ baro relief
F = Enthalpy econo w/ baro relief
K = 2 – Position damper

Service Options
0 = None
1 = Unpowered convenience outlet
2 = Powered convenience outlet
3 = Hinged panels
4 = Hinged panels, unpwrd conv outlet
5 = Hinged panels, pwrd conv outlet

Electrical Options
A = None
C = Non – fused disconnect
D = Thru the base connections
F = Non – fused & thru the base

Brand / Packaging
0 = Standard
1 = LTL

NOTE: On single phase (-3 voltage code) models, the following are not available as a factory-installed option:
- Humidi-MiZer
- Economizer or 2-Position Damper
- Coated Coils or CU Fin Coils
- Powered 115 Volt Convenience Outlet
- Louvered Hail Guards

Table 1 – FACTORY-INSTALLED OPTIONS AND FIELD-INSTALLED ACCESSORIES

CATEGORY	ITEM	FACTORY INSTALLED OPTION	FIELD INSTALLED ACCESSORY
Cabinet	Thru–the–base electrical connections	X	X
	Hinged access panels	X	
	Supply duct cover – 14 size only		X
Coil Options	Cu/Cu indoor and/or outdoor coils[4]	X	
	Pre–coated outdoor coils[4]	X	
	Premium, E–coated outdoor coils[4]	X	
Humidity Control	Humidi–MiZer Adaptive Dehumidification System[4]	X	
Condenser Protection	Condenser coil hail guard (louvered design)[4]	X	X
Controls	Thermostats, temperature sensors, and subbases		X
	PremierLink DDC communicating controller	X	X
	RTU Open multi–protocol controller	X	
	Smoke detector (supply and/or return air)	X	
	Time Guard II compressor delay control circuit		X
	Phase Monitor		X
Economizers & Outdoor Air Dampers	EconoMi$er IV (for electro–mechanical controlled RTUs)[4]	X	X
	EconoMi$er2 (for DDC controlled RTUs)[4]	X	X
	Motorized 2 position outdoor–air damper[4]	X	X
	Manual outdoor–air damper (25% and 50%)		X
	Barometric relief[1]	X	X
	Power exhaust		X
Economizer Sensors & IAQ Devices	Single dry bulb temperature sensors[2]	X	X
	Differential dry bulb temperature sensors[2]		X
	Single enthalpy sensors[2]	X	X
	Differential enthalpy sensors[2]		X
	CO_2 sensor (wall, duct, or unit mounted)[2]	X	X
Electric Heat	Electric Resistance Heaters		X
	Single Point Kit		X
Indoor Motor & Drive	Multiple motor and drive packages	X	
Low Ambient Control	Winter start kit[3]		X
	Motormaster head pressure controller[3]		X
Power Options	Convenience outlet (powered)[4]	X	
	Convenience outlet (unpowered)	X	
	Non–fused disconnect	X	
Roof Curbs	Roof curb 14” (356mm)		X
	Roof curb 24” (610mm)		X

NOTES:
1. Included with economizer.
2. Sensors used to optimize economizer performance.
3. See application data for assistance.
4. Not available as factory installed option on single phase (208/230/1/60) models. Use field installed accessory where available.

FACTORY OPTIONS AND/OR ACCESSORIES

Economizer (dry-bulb or enthalpy)

Economizers save money. They bring in fresh, outside air for ventilation; and provide cool, outside air to cool your building. This is the preferred method of low-ambient cooling. When coupled to CO_2 sensors, Economizers can provide even more savings by coupling the ventilation air to only that amount required.

Economizers are available, installed and tested by the factory, with either enthalpy or dry-bulb temperature inputs. There are also models for electromechanical as well as direct digital controllers. Additional sensors are available as accessories to optimize the economizers.

Economizers include gravity controlled, barometric relief equalizes building pressure and ambient air pressures. This can be a cast effective solution to prevent building pressurization.

CO_2 Sensor

Improves productivity and saves money by working with the economizer to intake only the correct amount of outside air for ventilation. As occupants fill your building, the CO_2 sensor detects their presence through increasing CO_2 levels, and opens the economizer appropriately.

When the occupants leave, the CO_2 levels decrease, and the sensor appropriately closes the economizer. This intelligent control of the ventilation air, called Demand Control Ventilation (DCV) reduces the overall load on the rooftop, saving money.

Smoke Detectors

Trust the experts. Smoke detectors make your application safer and your job easier. Carrier smoke detectors immediately shut down the rooftop unit when smoke is detected. They are available, installed by the factory, for supply air, return air, or both.

Louvered Hail Guards

Sleek, louvered panels protect the condenser coil from hail damage, foreign objects, and incidental contact.

Convenience Outlet (powered or un-powered)

Reduce service and/or installation costs by including a convenience outlet in your specification. Carrier will install this service feature at our factory. Provides a convenient, 15 amp, 115v GFCI receptacle with “Wet in Use” cover. The “powered” option allows the installer to power the outlet from the line side of the disconnect or load side as required by code. The “unpowered” option is to be powered from a separate 115/120v power source.

Non-fused Disconnect

This OSHA-compliant, factory-installed, safety switch allows a service technician to locally secure power to the rooftop.

Power Exhaust with Barometric Relief.

Superior internal building pressure control. This field-installed accessory may eliminate the need for costly, external pressure control fans.

PremierLink™

This CCN controller regulates your rooftop’s performance to tighter tolerances and expanded limits, as well as facilitates zoning systems and digital accessories. It also unites your Carrier HVAC equipment together on one, coherent CCN network. The PremierLink can be factory-installed, or easily field-installed.

RTU Open, Multi-protocol Controller

Connect the rooftop to an existing BAS without needing complicated translators or adapter modules using the RTU Open controller. This new controller speaks the 4 most common building automation system languages (Bacnet, Modbus, N2, and Lonworks). Use this controller when you have an existing BAS. Besides the 4 protocols, it also communicates with a Carrier Open system (I-Vu and VVT).

Time Guard II Control Circuit

This accessory protects your compressor by preventing short-cycling in the event of some other failure, prevents the compressor from restarting for 30 seconds after stopping. Not required with PremierLink®, RTU-MP, or authorized commercial thermostats.

Motorized 2-Position Damper

The new Carrier 2-position, motorized outdoor air damper admits up to 100% outside air. Using reliable, gear-driven technology, the 2-position damper opens to allow ventilation air and closes when the rooftop stops, stopping unwanted infiltration.

Manual OA Damper

Manual outdoor air dampers are an economical way to bring in ventilation air. The dampers are available in 25% and 50% versions.

Optional Humidi-MiZer Adaptive Dehumidification System

Carrier's Humidi-MiZer adaptive dehumidification system is an all-inclusive factory installed option that can be ordered with any WeatherMaster 50HC04-14 rooftop unit.

This system expands the envelope of operation of Carrier's WeatherMaster rooftop products to provide unprecedented flexibility to meet year round comfort conditions.

The Humidi-MiZer adaptive dehumidification system has the industry's only dual dehumidification mode setting. The Humidi-MiZer system includes two new modes of operation.

The WeatherMaster 50HC04-14 rooftop coupled with the Humidi-MiZer system is capable of operating in normal design cooling mode, subcooling mode, and hot gas reheat mode. Normal design cooling mode is when the unit will operate under its normal sequence of operation by cycling compressors to maintain comfort conditions.

Subcooling mode will operate to satisfy part load type conditions when the space requires combined sensible and a higher proportion of latent load control. Hot Gas Reheat mode will operate when outdoor temperatures diminish and the need for latent capacity is required for sole humidity control. Hot Gas Reheat mode will provide neutral air for maximum dehumidification operation.

Hinged Access Panels

Allows access to unit's major components with specifically designed hinged access panels. Panels are: filter, control box, fan motor and compressor.

Motormaster Head Pressure Controller

The Motormaster motor controller is a low ambient, head pressure controller kit that is designed to maintain the unit's condenser head pressure during periods of low ambient cooling operation. This device should be used as an alternative to economizer free cooling not when economizer usage is either not appropriate or desired. The Motormaster will either cycle the outdoor-fan motors or operate them at reduced speed to maintain the unit operation, depending on the model.

Winter Start Kit

The winter start kit by Carrier extends the low ambient limit of your rooftop to 25°F (-4°C). The kit bypasses the low pressure switch, preventing nuisance tripping of the low pressure switch. Other low ambient precautions may still be prudent.

Alternate Motors and Drives

Some applications need larger horsepower motors, some need more airflow, and some need both. Regardless of the case, your Carrier expert has a factory installed combination to meet your application. A wide selection of motors and pulleys (drives) are available, factory installed, to handle nearly any application.

Thru-the-Base Connections

Thru-the-base connections, available as either an accessory or as a factory option, are necessary to ensure proper connection and seal when routing wire and piping through the rooftop's basepan and curb. These couplings eliminate roof penetration and should be considered for gas lines, main power lines, as well as control power.

Electric Heaters

Carrier offers a full-line of field-installed accessory heaters. The heaters are very easy to use, install and are all pre-engineered and certified.

Table 2 – AHRI COOLING RATING TABLE 1-STAGE COOLING

UNIT	COOLING STAGES	NOM. CAPACITY (TONS)	NET COOLING CAPACITY (MBH)	TOTAL POWER (kW)	SEER	EER	IEER
A04	1	3	36.0	2.9	15.00	12.50	–
A05	1	4	48.5	3.7	15.60	13.00	–
A06	1	5	57.5	4.6	15.20	12.45	–
A07	1	6	73.0	6.0	–	12.20	13.20

Table 3 – AHRI COOLING RATING TABLE 2-STAGE COOLING

UNIT	COOLING STAGES	NOM. CAPACITY (TONS)	NET COOLING CAPACITY (MBH)	TOTAL POWER (kW)	SEER	EER	IEER
D08	2	7.5	89.0	7.3	–	12.20	13.20
D09	2	8.5	97.0	8.0	–	12.20	13.20
D12	2	10	115.0	9.8	–	11.70	12.20
D14	2	12.5	146.0	11.8	–	12.40	13.20

LEGEND

AHRI – Air Conditioning, Heating and Refrigeration Institute Test Standard
ASHRAE – American Society of Heating, Refrigerating and Air Conditioning, Inc.
EER – Energy Efficiency Ratio
IEER – Integrated Energy Efficiency Ratio
SEER – Seasonal Energy Efficiency Ratio

NOTES:

1. Rated in accordance with AHRI Standards 210/240 (04–06 size) and 340/360 (07–14 size).
2. Ratings are based on:
   Cooling Standard: 80°F (27°C) db, 67°F (19°C) wb indoor air temp and 95°F (35°C) db outdoor air temp.
   IEER Standard: A measure that expresses cooling part–load EER efficiency for commercial unitary air–conditioning and heat pump equipment on the basis of weighted operation at various load capacities.
3. All 50HC units comply with ASHRAE 90.1 Energy Standard for minimum SEER and EER requirements.
4. 50HC units comply with US Energy Policy Act (2005). To evaluate code compliance requirements, refer to state and local codes.

Table 4 – MINIMUM - MAXIMUM AIRFLOWS ELECTRIC HEAT

UNIT	COOLING		ELECTRIC HEATERS	
	Minimum	Maximum	Minimum	Maximum
50HC**04	900	1500	900	1500
50HC**05	1200	2000	1200	2000
50HC**06	1500	2500	1500	2500
50HC**07	1800	3000	1800	3000
50HC**08	2250	3750	2250	3750
50HC**09	2550	4250	2250	4250
50HC**12	3000	5000	3000	5000
50HC**14	3750	6250	3750	6250

Table 5 – SOUND PERFORMANCE TABLE

UNIT	COOLING STAGES	OUTDOOR SOUND (dB) AT 60								
		A–WEIGHTED	63	125	250	500	1000	2000	4000	8000
A04	1	76	78.2	78.0	74.2	73.3	70.6	66.0	62.4	56.9
A05	1	78	84.7	83.6	77.1	74.6	72.3	68.3	64.7	60.9
A06	1	77	87.5	82.5	76.1	73.6	71.3	67.1	64.1	60.0
A07	1	82	90.1	82.6	81.0	79.4	77.0	73.0	70.4	66.7
D08	2	82	90.6	84.3	80.2	79.3	77.1	72.2	67.4	63.7
D09	2	82	88.6	85.0	81.6	79.5	77.4	74.1	71.0	66.3
D12	2	87	85.9	87.9	85.6	84.4	82.8	78.5	74.9	72.5
D14	2	83	89.3	86.0	82.9	80.7	78.5	73.6	69.6	64.5

LEGEND

dB – Decibel

NOTES:

1. Outdoor sound data is measure in accordance with AHRI.
2. Measurements are expressed in terms of sound power. Do not compare these values to sound pressure values because sound pressure depends on specific environmental factors which normally do not match individual applications. Sound power values are independent of the environment and therefore more accurate.
3. A–weighted sound ratings filter out very high and very low frequencies, to better approximate the response of “average” human ear. A–weighted measurements for Carrier units are taken in accordance with AHRI.

Table 6 – PHYSICAL DATA (COOLING) 3 - 6 TONS

		50HC*04	50HC*05	50HC*06	50HC*07
Refrigeration System					
	# Circuits / # Comp. / Type	1 / 1 / Scroll	1 / 1 / Scroll	1 / 1 / Scroll	1 / 1 / Scroll
	Puron® refrig. (R–410A) charge (lbs–oz)	9 – 0	12 – 8	13 – 3	14 – 0
	Humidi–MiZer Puron refrig. (R–410A) charge (lbs–oz)	11 – 0	19 – 12	20 – 0	22 – 8
	Metering Device	TXV	TXV	TXV	TXV
	High–press. Trip / Reset (psig)	630 / 505	630 / 505	630 / 505	630 / 505
	Low–press. Trip / Reset (psig)	54 / 117	54 / 117	54 / 117	54 / 117
	Compressor Capacity Staging (%)	100%	100%	100%	100%
Evap. Coil					
	Material (Tube Fin)	Cu / Al	Cu / Al	Cu / Al	Cu / Al
	Coil type	3/8” RTPF	3/8” RTPF	3/8” RTPF	3/8” RTPF
	Rows / FPI	3 / 15	3 / 15	4 / 15	3 / 15
	Total Face Area (ft^2)	5.5	7.3	7.3	8.9
	Condensate Drain Conn. Size	3/4”	3/4”	3/4”	3/4”
Humidi–MiZer Coil					
	Material (Tube Fin)	Cu / Al	Cu / Al	Cu / Al	Cu / Al
	Coil type	3/8” RTPF	3/8” RTPF	3/8” RTPF	3/8” RTPF
	Rows / FPI	1 / 17	2 / 17	2 / 17	2 / 17
	Total Face Area (ft^2)	3.9	5.2	5.2	5.2
Evap. Fan and Motor					
Standard Static 1 phase	Motor Qty / Drive Type	1 / Direct	1 / Direct	1 / Direct	–
	Max BHP	1.0	1.0	1.0	–
	RPM Range	600–1200	600–1200	600–1200	–
	Motor Frame Size	48	48	48	–
	Fan Qty / Type	1 / Centrifugal	1 / Centrifugal	1 / Centrifugal	–
	Fan Diameter (in)	10 x 10	10 x 10	10 x 10	–
Standard Static 3 phase	Motor Qty / Drive Type	1 / Direct	1 / Direct	1 / Direct	1 / Belt
	Max BHP	1.0	1.0	1.0	1.7
	RPM Range	600–1200	600–1200	600–1200	489–747
	Motor Frame Size	48	48	48	56
	Fan Qty / Type	1 / Centrifugal	1 / Centrifugal	1 / Centrifugal	1 / Centrifugal
	Fan Diameter (in)	10 x 10	10 x 10	11 x 10	15 x 15
Standard Static 3 phase*	Motor Qty / Drive Type	1 / Belt	1 / Belt	1 / Belt	–
	Max BHP	1.2	1.2	1.2	–
	RPM Range	560–854	560–854	770–1175	–
	Motor Frame Size	48	48	48	–
	Fan Qty / Type	1 / Centrifugal	1 / Centrifugal	1 / Centrifugal	–
	Fan Diameter (in)	10 x 10	10 x 10	10 x 10	–

* Humidi–MiZer models only
– Not applicable

		50HC*04	50HC*05	50HC*06	50HC*07
Medium Static 3 phase	Motor Qty / Drive Type	1 / Belt	1 / Belt	1 / Belt	1 / Belt
	Max BHP	1.2	1.7	2.4	2.9
	RPM Range	770 – 1175	920 – 1303	1035 – 1466	733 – 949
	Motor Frame Size	48	56	56	56
	Fan Qty / Type	1 / Centrifugal	1 / Centrifugal	1 / Centrifugal	1 / Centrifugal
	Fan Diameter (in)	10 x 10	10 x 10	10 x 10	15 x 15
Medium Static 3 phase*	Motor Qty / Drive Type	1 / Belt	1 / Belt	1 / Belt	–
	Max BHP	1.2	1.7	2.4	–
	RPM Range	770 – 1175	770 – 1175	1035 – 1466	–
	Motor Frame Size	48	48	56	–
	Fan Qty / Type	1 / Centrifugal	1 / Centrifugal	1 / Centrifugal	–
	Fan Diameter (in)	10 x 10	10 x 10	10 x 10	–
High Static 3 phase	Motor Qty / Drive Type	1 / Belt	1 / Belt	1 / Belt	1 / Belt
	Max BHP	2.4	2.9	2.9	4.7
	RPM Range	1035 – 1466	1208 – 1639	1303 – 1687	909 – 1102
	Motor Frame Size	56	56	56	14
	Fan Qty / Type	1 / Centrifugal	1 / Centrifugal	1 / Centrifugal	1 / Centrifugal
	Fan Diameter (in)	10 x 10	10 x 10	10 x 10	15 x 15
Cond. Coil					
	Material (Tube/Fin)	Cu / Al	Cu / Al	Cu / Al	Cu / Al
	Coil type	3/8” RTPF	3/8” RTPF	3/8” RTPF	3/8” RTPF
	Rows / FPI	2 / 17	2 / 17	2 / 17	2 / 17
	Total Face Area (ft^2)	12.7	21.3	21.3	20.5
Cond. fan / motor					
	Qty / Motor Drive Type	1/ Direct	1/ Direct	1/ Direct	2/ Direct
	Motor HP / RPM	1/8 / 825	1/4 / 1100	1/4 / 1100	1/4 / 1100
	Fan diameter (in)	22	22	22	22
Filters					
	RA Filter # / Size (in)	2 / 16 x 25 x 2	4 / 16 x 16 x 2	4 / 16 x 16 x 2	4 / 16 x 20 x 2
	OA inlet screen # / Size (in)	1 / 20 x 24 x 1	1 / 20 x 24 x 1	1 / 20 x 24 x 1	1 / 20 x 36 x 1

* Humidi – MiZer models only
– Not applicable

Table 7 – PHYSICAL DATA (COOLING) 7.5 - 12.5 TONS

	50HC*08	50HC*09	50HC*12	50HC*14
Refrigeration System				
# Circuits / # Comp. / Type	2 / 2 / Scroll	2 / 2 / Scroll	2 / 2 / Scroll	2 / 2 / Scroll
Puron refrig (R–410a) charge A/B (lbs–oz)	9 – 10 / 9 – 10	9 – 14 / 9 – 14	12 – 11 / 12 – 5	16 – 7 / 15 – 5
Humidi–MiZer Puron refrig (R–410a) charge A/B (lbs–oz)	13–3 / 13–3	16–13 / 16–13	18–3 / 17–3	25–8 / 22–8
Metering device	TXV	TXV	TXV	TXV
High–press. Trip / Reset (psig)	630 / 505	630 / 505	630 / 505	630 / 505
Low–press. Trip / Reset (psig)	54 / 117	54 / 117	54 / 117	54 / 117
Compressor Capacity Staging (%)	50% / 100%	50% / 100%	50% / 100%	50% / 100%
Evap. Coil				
Material (Tube/Fin)	Cu / Al	Cu / Al	Cu / Al	Cu / Al
Coil type	3/8” RTPF	3/8” RTPF	3/8” RTPF	3/8” RTPF
Rows / FPI	4 / 15	4 / 15	4 / 15	4 / 15
total face area (ft2)	11.1	11.1	11.1	17.5
Condensate drain conn. size	3/4”	3/4”	3/4”	3/4”
Humidi–MiZer Coil				
Material (Tube/Fin)	Cu / Al	Cu / Al	Cu / Al	Cu / Al
Coil type	3/8” RTPF	3/8” RTPF	3/8” RTPF	3/8” RTPF
Rows / FPI	2 / 17	2 / 17	2 / 17	1 / 17
total face area (ft2)	6.3	8.4	8.6	13.8
Evap. fan and motor				
Standard Static 3 phase				
Motor Qty / Drive type	1 / Belt	1 / Belt	1 / Belt	1 / Belt
Max BHP	1.7	1.7	2.4	2.9
RPM range	518–733	518–733	591–838	440–609
Motor Frame Size	56	56	56	56Y
Fan Qty / Type	1 / Centrifugal	1 / Centrifugal	1 / Centrifugal	1 / Centrifugal
Fan Diameter (in)	15 x 15	15 x 15	15 x 15	18 x 18
Medium Static 3 phase				
Motor Qty / Drive type	1 / Belt	1 / Belt	1 / Belt	1 / Belt
Max BHP	2.4	2.4	3.7	3.7
RPM range	690–936	690–936	838–1084	609–778
Motor Frame Size	56	56	56HZ	56HZ
Fan Qty / Type	1 / Centrifugal	1 / Centrifugal	1 / Centrifugal	1 / Centrifugal
Fan Diameter (in)	15 x 15	15 x 15	15 x 15	18 x 18
High Static 3 phase				
Motor Qty / Drive type	1 / Belt	1 / Belt	1 / Belt	1 / Belt
Max BHP	3.7	3.7	4.9	6.1*
RPM range	838–1084	838–1084	1022–1240	776–955
Motor Frame Size	56	56	145TY	S184T
Fan Qty / Type	1 / Centrifugal	1 / Centrifugal	1 / Centrifugal	1 / Centrifugal
Fan Diameter (in)	15 x 15	15 x 15	15 x 15	18 x 18
Cond. Coil				
Material (Tube/Fin)	Cu / Al	Cu / Al	Cu / Al	Cu / Al
Coil type	3/8” RTPF	3/8” RTPF	3/8” RTPF	3/8” RTPF
Rows / FPI	2 / 17	2 / 17	3 / 17	2 / 17
Total Face Area (ft^2)	25.1	25.1	25.1	2 at 23.1
Cond. fan / motor				
Qty / Motor drive type	2 / direct	2 / direct	1 / direct	3 / direct
Motor HP / RPM	1/4 / 1100	1/4 / 1100	1 / 1175	1/4 / 1100
Fan diameter (in)	22	22	30	22
Filters				
RA Filter # / size (in)	4 / 20 x 20 x 2	4 / 20 x 20 x 2	4 / 20 x 20 x 2	6 / 18 x 24 x 2 Vert 2 / 24 x 27 x 1
OA inlet screen # / size (in)	1 / 20 x 24 x 1	1 / 20 x 24 x 1	1 / 20 x 24 x 1	Horz 1 / 30 x 39 x 1

* Section 313 of the Energy Independence and Security Act of 2007 (EISA 2007) mandates that the efficiency of general purpose motors we use in our Light Commercial Rooftops rated at 5.0 HP and larger be increased on or after December 19, 2010.

Table 8 – ELECTRIC HEAT - ELECTRICAL DATA — 3 TONS

UNIT	NOM. V – PH – HZ	IFM TYPE	ELECTRIC HEATER PART NUMBER CRHEATERXXXXXX	NOM PWR (kW)	APP PWR (kW)	SINGLE POINT KIT PART NUMBER CRSINGLEXXXXXX			
						NO C.O. or UNPWRD C.O.		w/PWRD C.O.	
						NO P.E.	w/P.E. (pwrd fr/unit)	NO P.E.	w/P.E. (pwrd fr/unit)
50HC–A04	208/230–1–60	DD–STD	101A00	4.4	3.3/4.0	–	–	–	–
			102A00	6.5	4.9/6.0	–	–	–	037A00
			103B00	8.7	6.5/8.0	037A00	037A00	040A00	040A00
			104B00	10.5	7.9/9.6	040A00	040A00	040A00	040A00
			102A00,102A00	13	9.8/11.9	040A00	040A00	040A00	040A00
		BD–STD*	101A00	4.4	3.3/4.0	–	–	–	–
			102A00	6.5	4.9/6.0	–	–	–	–
			103B00	8.7	6.5/8.0	037A00	037A00	037A00	037A00
			104B00	10.5	7.9/9.6	040A00	040A00	040A00	040A00
			102A00,102A00	13	9.8/11.9	040A00	040A00	040A00	040A00
		MED*	101A00	4.4	3.3/4.0	–	–	–	–
			102A00	6.5	4.9/6.0	–	–	–	–
			103B00	8.7	6.5/8.0	037A00	037A00	037A00	037A00
			104B00	10.5	7.9/9.6	040A00	040A00	040A00	040A00
			102A00,102A00	13	9.8/11.9	040A00	040A00	040A00	040A00
	208/230–3–60	DD–STD	101A00	4.4	3.3/4.0	–	–	–	–
			102A00	6.5	4.9/6.0	–	–	–	–
			103B00	8.7	6.5/8.0	–	–	–	–
			104B00	10.5	7.9/9.6	–	–	–	–
			105A00	16	12.0/14.7	037A00	037A00	038A00	038A00
		BD–STD*	101A00	4.4	3.3/4.0	–	–	–	–
			102A00	6.5	4.9/6.0	–	–	–	–
			103B00	8.7	6.5/8.0	–	–	–	–
			104B00	10.5	7.9/9.6	–	–	–	–
			105A00	16	12.0/14.7	037A00	037A00	038A00	038A00
		MED	101A00	4.4	3.3/4.0	–	–	–	–
			102A00	6.5	4.9/6.0	–	–	–	–
			103B00	8.7	6.5/8.0	–	–	–	–
			104B00	10.5	7.9/9.6	–	–	–	–
			105A00	16	12.0/14.7	037A00	037A00	038A00	038A00
		HIGH	101A00	4.4	3.3/4.0	–	–	–	–
			102A00	6.5	4.9/6.0	–	–	–	–
			103B00	8.7	6.5/8.0	–	–	–	–
			104B00	10.5	7.9/9.6	–	–	–	–
			105A00	16	12.0/14.7	037A00	037A00	038A00	038A00
	460–3–60	DD–STD	106A00	6	5.5	–	–	–	–
			107A00	8.8	8.1	–	–	–	–
			108A00	11.5	10.6	–	–	–	–
			109A00	14	12.9	–	–	–	–
		BD–STD*	106A00	6	5.5	–	–	–	–
			107A00	8.8	8.1	–	–	–	–
			108A00	11.5	10.6	–	–	–	–
			109A00	14	12.9	–	–	–	–
		MED	106A00	6	5.5	–	–	–	–
			107A00	8.8	8.1	–	–	–	–
			108A00	11.5	10.6	–	–	–	–
			109A00	14	12.9	–	–	–	–
		HIGH	106A00	6	5.5	–	–	–	–
			107A00	8.8	8.1	–	–	–	–
			108A00	11.5	10.6	–	–	–	–
			109A00	14	12.9	–	–	–	–

* – This drive package only available on Humidi–MiZer models

LEGEND

APP PWR – 208 / 230V / 460V / 575V
DD – Direct drive
BD – Belt drive
C.O. – Convenient outlet
FLA – Full load amps
IFM – Indoor fan motor
NOM PWR – 240V / 480V / 600V
P.E. – Power exhaust
PWRD – Powered convenient outlet
UNPWRD – Unpowered convenient outlet

Table 9 – ELECTRIC HEAT - ELECTRICAL DATA — 4 TONS

UNIT	NOM. V – PH – HZ	IFM TYPE	ELECTRIC HEATER PART NUMBER CRHEATERXXXXXX	NOM PWR (kW)	APP PWR (kW)	SINGLE POINT KIT PART NUMBER CRSINGLEXXXXXX			
						NO C.O. or UNPWRD C.O.		w/PWRD C.O.	
						NO P.E.	w/P.E. (pwrd fr/unit)	NO P.E.	w/P.E. (pwrd fr/unit)
50HC–A05	208/230–1–60	DD–STD	101A00	4.4	3.3/4.0	–	–	–	–
			103B00	8.7	6.5/8.0	037A00	037A00	040A00	040A00
			102A00,102A00	13	9.8/11.9	040A00	040A00	040A00	040A00
			103B00,103B00	17.4	13.1/16.0	040A00	040A00	040A00	040A00
			104B00,104B00	21	15.8/19.3	040A00	040A00	040A00	040A00
		BD–STD*	101A00	4.4	3.3/4.0	–	–	–	–
			103B00	8.7	6.5/8.0	037A00	037A00	037A00	037A00
			102A00,102A00	13	9.8/11.9	040A00	040A00	040A00	040A00
			103B00,103B00	17.4	13.1/16.0	040A00	040A00	040A00	040A00
			104B00,104B00	21	15.8/19.3	040A00	040A00	040A00	040A00
		MED*	101A00	4.4	3.3/4.0	–	–	–	–
			103B00	8.7	6.5/8.0	037A00	037A00	037A00	037A00
			102A00,102A00	13	9.8/11.9	040A00	040A00	040A00	040A00
			103B00,103B00	17.4	13.1/16.0	040A00	040A00	040A00	040A00
			104B00,104B00	21	15.8/19.3	040A00	040A00	040A00	040A00
	208/230–3–60	DD–STD	102A00	6.5	4.9/6.0	–	–	–	–
			103B00	8.7	6.5/8.0	–	–	–	–
			105A00	16	12.0/14.7	037A00	037A00	038A00	038A00
			104B00,104B00	21	15.8/19.3	038A00	038A00	038A00	038A00
		BD–STD*	102A00	6.5	4.9/6.0	–	–	–	–
			103B00	8.7	6.5/8.0	–	–	–	–
			105A00	16	12.0/14.7	037A00	037A00	038A00	038A00
			104B00,104B00	21	15.8/19.3	038A00	038A00	038A00	038A00
		MED	102A00	6.5	4.9/6.0	–	–	–	–
			103B00	8.7	6.5/8.0	–	–	–	–
			105A00	16	12.0/14.7	037A00	037A00	038A00	038A00
			104B00,104B00	21	15.8/19.3	038A00	038A00	038A00	038A00
		HIGH	102A00	6.5	4.9/6.0	–	–	–	–
			103B00	8.7	6.5/8.0	–	–	–	–
			105A00	16	12.0/14.7	037A00	037A00	038A00	038A00
			104B00,104B00	21	15.8/19.3	038A00	038A00	038A00	038A00
	460–3–60	DD–STD	106A00	6	5.5	–	–	–	–
			108A00	11.5	10.6	–	–	–	–
			109A00	14	12.9	–	–	–	–
			108A00,108A00	23	21.1	037A00	037A00	037A00	037A00
		BD–STD*	106A00	6	5.5	–	–	–	–
			108A00	11.5	10.6	–	–	–	–
			109A00	14	12.9	–	–	–	–
			108A00,108A00	23	21.1	037A00	037A00	037A00	037A00
		MED	106A00	6	5.5	–	–	–	–
			108A00	11.5	10.6	–	–	–	–
			109A00	14	12.9	–	–	–	–
			108A00,108A00	23	21.1	037A00	037A00	037A00	037A00
		HIGH	106A00	6	5.5	–	–	–	–
			108A00	11.5	10.6	–	–	–	–
			109A00	14	12.9	–	–	–	–
			108A00,108A00	23	21.1	037A00	037A00	037A00	037A00

* – This drive package only available on Humidi–MiZer models

LEGEND

APP PWR – 208 / 230V / 460V / 575V
DD – Direct drive
BD – Belt drive
C.O. – Convenient outlet
FLA – Full load amps
IFM – Indoor fan motor
NOM PWR – 240V / 480V / 600V
P.E. – Power exhaust
PWRD – Powered convenient outlet
UNPWRD – Unpowered convenient outlet

Table 10 – ELECTRIC HEAT - ELECTRICAL DATA — 5 TONS

UNIT	NOM. V – PH – HZ	IFM TYPE	ELECTRIC HEATER PART NUMBER CRHEATERXXXXXX	NOM PWR (kW)	APP PWR (kW)	SINGLE POINT KIT PART NUMBER CRSINGLEXXXXXX			
						NO C.O. or UNPWRD C.O.		w/PWRD C.O.	
						NO P.E.	w/P.E. (pwrd fr/unit)	NO P.E.	w/P.E. (pwrd fr/unit)
50HC–A06	208/230–1–60	DD–STD	102A00	6.5	4.9/6.0	–	–	–	037A00
			103B00	8.7	6.5/8.0	037A00	037A00	040A00	040A00
			102A00,102A00	13	9.8/11.9	040A00	040A00	040A00	040A00
			103B00,103B00	17.4	13.1/16.0	040A00	040A00	040A00	040A00
			104B00,104B00	21	15.8/19.3	040A00	040A00	040A00	040A00
		BD–STD*	102A00	6.5	4.9/6.0	–	–	–	–
			103B00	8.7	6.5/8.0	037A00	037A00	037A00	037A00
			102A00,102A00	13	9.8/11.9	040A00	040A00	040A00	040A00
			103B00,103B00	17.4	13.1/16.0	040A00	040A00	040A00	040A00
			104B00,104B00	21	15.8/19.3	040A00	040A00	040A00	040A00
		MED*	102A00	6.5	4.9/6.0	–	–	–	037A00
			103B00	8.7	6.5/8.0	037A00	037A00	040A00	040A00
			102A00,102A00	13	9.8/11.9	040A00	040A00	040A00	040A00
			103B00,103B00	17.4	13.1/16.0	040A00	040A00	040A00	040A00
			104B00,104B00	21	15.8/19.3	040A00	040A00	040A00	040A00
	208/230–3–60	DD–STD	102A00	6.5	4.9/6.0	–	–	–	–
			104B00	10.5	7.9/9.6	–	–	–	–
			105A00	16	12.0/14.7	037A00	037A00	038A00	038A00
			104B00,104B00	21	15.8/19.3	038A00	038A00	038A00	038A00
			104B00,105A00	26.5	19.9/24.3	038A00	038A00	038A00	038A00
		BD–STD*	102A00	6.5	4.9/6.0	–	–	–	–
			104B00	10.5	7.9/9.6	–	–	–	–
			105A00	16	12.0/14.7	037A00	037A00	038A00	038A00
			104B00,104B00	21	15.8/19.3	038A00	038A00	038A00	038A00
			104B00,105A00	26.5	19.9/24.3	038A00	038A00	038A00	038A00
		MED	102A00	6.5	4.9/6.0	–	–	–	–
			104B00	10.5	7.9/9.6	–	–	–	–
			105A00	16	12.0/14.7	037A00	037A00	038A00	038A00
			104B00,104B00	21	15.8/19.3	038A00	038A00	038A00	038A00
			104B00,105A00	26.5	19.9/24.3	038A00	038A00	038A00	038A00
		HIGH	102A00	6.5	4.9/6.0	–	–	–	–
			104B00	10.5	7.9/9.6	–	–	–	–
			105A00	16	12.0/14.7	037A00	037A00	038A00	038A00
			104B00,104B00	21	15.8/19.3	038A00	038A00	038A00	038A00
			104B00,105A00	26.5	19.9/24.3	038A00	038A00	038A00	038A00
	460–3–60	DD–STD	106A00	6	5.5	–	–	–	–
			108A00	11.5	10.6	–	–	–	–
			109A00	14	12.9	–	–	–	–
			108A00,108A00	23	21.1	037A00	037A00	037A00	037A00
			108A00,109A00	25.5	23.4	037A00	037A00	037A00	037A00
		BD–STD*	106A00	6	5.5	–	–	–	–
			108A00	11.5	10.6	–	–	–	–
			109A00	14	12.9	–	–	–	–
			108A00,108A00	23	21.1	037A00	037A00	037A00	037A00
			108A00,109A00	25.5	23.4	037A00	037A00	037A00	037A00
		MED	106A00	6	5.5	–	–	–	–
			108A00	11.5	10.6	–	–	–	–
			109A00	14	12.9	–	–	–	–
			108A00,108A00	23	21.1	037A00	037A00	037A00	037A00
			108A00,109A00	25.5	23.4	037A00	037A00	037A00	037A00
		HIGH	106A00	6	5.5	–	–	–	–
			108A00	11.5	10.6	–	–	–	–
			109A00	14	12.9	–	–	–	–
			108A00,108A00	23	21.1	037A00	037A00	037A00	037A00
			108A00,109A00	25.5	23.4	037A00	037A00	037A00	037A00

* – This drive package only available on Humidi–MiZer models

LEGEND

APP PWR – 208 / 230V / 460V / 575V
DD – Direct drive
BD – Belt drive
C.O. – Convenient outlet
FLA – Full load amps
IFM – Indoor fan motor
NOM PWR – 240V / 480V / 600V
P.E. – Power exhaust
PWRD – Powered convenient outlet
UNPWRD – Unpowered convenient outlet

Table 11 – ELECTRIC HEAT - ELECTRICAL DATA — 6 TONS

UNIT	NOM. V – PH – HZ	IFM TYPE	ELECTRIC HEATER PART NUMBER CRHEATERXXXXXX	NOM PWR (kW)	APP PWR (kW)	SINGLE POINT KIT PART NUMBER CRSINGLEXXXXXX			
						NO C.O. or UNPWRD C.O.		w/PWRD C.O.	
						NO P.E.	w/P.E. (pwrd fr/unit)	NO P.E.	w/P.E. (pwrd fr/unit)
50HC–A07	208/230–3–60	STD	264A00	6.5	4.9/6.0	042A00	042A00	042A00	042A00
			117A00	10.5	7.9/9.6	042A00	042A00	042A00	042A00
			110A00	16.0	12.0/14.7	042A00	042A00	043A00	043A00
			117A00,117A00	21.0	15.8/19.3	043A00	043A00	043A00	043A00
			110A00,117A00	26.5	19.9/24.3	043A00	043A00	043A00	043A00
		MED	264A00	6.5	4.9/6.0	042A00	042A00	042A00	042A00
			117A00	10.5	7.9/9.6	042A00	042A00	042A00	042A00
			110A00	16.0	12.0/14.7	042A00	043A00	043A00	043A00
			117A00,117A00	21.0	15.8/19.3	043A00	043A00	043A00	043A00
			110A00,117A00	26.5	19.9/24.3	043A00	043A00	043A00	043A00
		HIGH	264A00	6.5	4.9/6.0	042A00	042A00	042A00	042A00
			117A00	10.5	7.9/9.6	042A00	042A00	042A00	043A00
			110A00	16.0	12.0/14.7	043A00	043A00	043A00	043A00
			117A00,117A00	21.0	15.8/19.3	043A00	043A00	043A00	043A00
			110A00,117A00	26.5	19.9/24.3	043A00	043A00	043A00	043A00
	460–3–60	STD	265A00	6.0	5.5	042A00	042A00	042A00	042A00
			266A00	11.5	10.6	042A00	042A00	042A00	042A00
			267A00	14.0	12.9	042A00	042A00	042A00	042A00
			268A00	23.0	21.1	042A00	042A00	042A00	042A00
			269A00	25.5	23.4	042A00	042A00	042A00	042A00
		MED	265A00	6.0	5.5	042A00	042A00	042A00	042A00
			266A00	11.5	10.6	042A00	042A00	042A00	042A00
			267A00	14.0	12.9	042A00	042A00	042A00	042A00
			268A00	23.0	21.1	042A00	042A00	042A00	042A00
			269A00	25.5	23.4	042A00	042A00	042A00	042A00
		HIGH	265A00	6.0	5.5	042A00	042A00	042A00	042A00
			266A00	11.5	10.6	042A00	042A00	042A00	042A00
			267A00	14.0	12.9	042A00	042A00	042A00	042A00
			268A00	23.0	21.1	042A00	042A00	042A00	042A00
			269A00	25.5	23.4	042A00	042A00	042A00	042A00

LEGEND

APP PWR – 208 / 230V / 460V / 575V
C.O. – Convenient outlet
FLA – Full load amps
IFM – Indoor fan motor
NOM PWR – 240V / 480V / 600V
P.E. – Power exhaust
PWRD – Powered convenient outlet
UNPWRD – Unpowered convenient outlet

Table 12 – ELECTRIC HEAT - ELECTRICAL DATA 7.5 TONS

UNIT	NOM. V – PH – HZ	IFM TYPE	ELECTRIC HEATER PART NUMBER CRHEATERXXXXXX	NOM PWR (kW)	APP PWR (kW)	SINGLE POINT KIT PART NUMBER CRSINGLEXXXXXX			
						NO C.O. or UNPWRD C.O.		w/PWRD C.O.	
						NO P.E.	w/P.E. (pwrd fr/unit)	NO P.E.	w/P.E. (pwrd fr/unit)
50HC–D08	208/230–3–60	STD	117A00	10.4	7.8/9.6	047A00	047A00	047A00	047A00
			110A00	16.0	12.0/14.7	047A00	047A00	049A00	049A00
			111A00	24.8	18.6/22.8	049A00	049A00	049A00	049A00
			112A00	32.0	24.0/29.4	049A00	049A00	049A00	049A00
			112A00,117A00	42.4	31.8/38.9	051A00	051A00	051A00	051A00
		MED	117A00	10.4	7.8/9.6	047A00	047A00	047A00	047A00
			110A00	16.0	12.0/14.7	047A00	047A00	049A00	049A00
			111A00	24.8	18.6/22.8	049A00	049A00	049A00	049A00
			112A00	32.0	24.0/29.4	049A00	049A00	049A00	049A00
			112A00,117A00	42.4	31.8/38.9	051A00	051A00	051A00	051A00
		HIGH	117A00	10.4	7.8/9.6	047A00	047A00	047A00	047A00
			110A00	16.0	12.0/14.7	049A00	049A00	049A00	049A00
			111A00	24.8	18.6/22.8	049A00	049A00	049A00	049A00
			112A00	32.0	24.0/29.4	049A00	049A00	049A00	049A00
			112A00,117A00	42.4	31.8/38.9	051A00	051A00	051A00	051A00
	460–3–60	STD	116A00	13.9	12.8	047A00	047A00	047A00	047A00
			113A00	16.5	15.2	047A00	047A00	047A00	047A00
			114A00	27.8	25.5	047A00	047A00	047A00	047A00
			115A00	33.0	30.3	047A00	047A00	047A00	047A00
			114A00,116A00	41.7	38.3	050A00	050A00	050A00	050A00
		MED	116A00	13.9	12.8	047A00	047A00	047A00	047A00
			113A00	16.5	15.2	047A00	047A00	047A00	047A00
			114A00	27.8	25.5	047A00	047A00	047A00	047A00
			115A00	33.0	30.3	047A00	047A00	047A00	047A00
			114A00,116A00	41.7	38.3	050A00	050A00	050A00	050A00
		HIGH	116A00	13.9	12.8	047A00	047A00	047A00	047A00
			113A00	16.5	15.2	047A00	047A00	047A00	047A00
			114A00	27.8	25.5	047A00	047A00	047A00	047A00
			115A00	33.0	30.3	047A00	047A00	047A00	050A00
			114A00,116A00	41.7	38.3	050A00	050A00	050A00	050A00
	575–3–60	STD	118A00	17.0	17.0	047A00	047A00	047A00	047A00
			119A00	34.0	34.0	047A00	047A00	047A00	050A00
		MED	118A00	17.0	17.0	047A00	047A00	047A00	047A00
			119A00	34.0	34.0	047A00	047A00	047A00	050A00
		HIGH	118A00	17.0	17.0	047A00	047A00	047A00	047A00
			119A00	34.0	34.0	047A00	047A00	047A00	050A00

LEGEND

APP PWR – 208 / 230V / 460V / 575V
C.O. – Convenient outlet
FLA – Full load amps
IFM – Indoor fan motor
NOM PWR – 240V / 480V / 600V
P.E. – Power exhaust
PWRD – Powered convenient outlet
UNPWRD – Unpowered convenient outlet

Table 13 – ELECTRIC HEAT - ELECTRICAL DATA 8.5 TONS

UNIT	NOM. V – PH – HZ	IFM TYPE	ELECTRIC HEATER PART NUMBER CRHEATERXXXXXX	NOM PWR (kW)	APP PWR (kW)	SINGLE POINT KIT PART NUMBER CRSINGLEXXXXXX			
						NO C.O. or UNPWRD C.O.		w/PWRD C.O.	
						NO P.E.	w/P.E. (pwrd fr/unit)	NO P.E.	w/P.E. (pwrd fr/unit)
50HCD–09	208/230–3–60	STD	117A00	10.4	7.8/9.6	047A00	047A00	047A00	047A00
			110A00	16.0	12.0/14.7	047A00	047A00	049A00	049A00
			111A00	24.8	18.6/22.8	049A00	049A00	049A00	049A00
			112A00	32.0	24.0/29.4	049A00	049A00	049A00	049A00
			112A00,117A00	42.4	31.8/38.9	051A00	051A00	051A00	051A00
		MED	117A00	10.4	7.8/9.6	047A00	047A00	047A00	047A00
			110A00	16.0	12.0/14.7	047A00	047A00	049A00	049A00
			111A00	24.8	18.6/22.8	049A00	049A00	049A00	049A00
			112A00	32.0	24.0/29.4	049A00	049A00	049A00	049A00
			112A00,117A00	42.4	31.8/38.9	051A00	051A00	051A00	051A00
		HIGH	117A00	10.4	7.8/9.6	047A00	047A00	047A00	047A00
			110A00	16.0	12.0/14.7	049A00	049A00	049A00	049A00
			111A00	24.8	18.6/22.8	049A00	049A00	049A00	049A00
			112A00	32.0	24.0/29.4	049A00	049A00	049A00	049A00
			112A00,117A00	42.4	31.8/38.9	051A00	051A00	051A00	051A00
	460–3–60	STD	116A00	13.9	12.8	047A00	047A00	047A00	047A00
			113A00	16.5	15.2	047A00	047A00	047A00	047A00
			114A00	27.8	25.5	047A00	047A00	047A00	047A00
			115A00	33.0	30.3	047A00	047A00	047A00	047A00
			114A00,116A00	41.7	38.3	050A00	050A00	050A00	050A00
		MED	116A00	13.9	12.8	047A00	047A00	047A00	047A00
			113A00	16.5	15.2	047A00	047A00	047A00	047A00
			114A00	27.8	25.5	047A00	047A00	047A00	047A00
			115A00	33.0	30.3	047A00	047A00	047A00	047A00
			114A00,116A00	41.7	38.3	050A00	050A00	050A00	050A00
		HIGH	116A00	13.9	12.8	047A00	047A00	047A00	047A00
			113A00	16.5	15.2	047A00	047A00	047A00	047A00
			114A00	27.8	25.5	047A00	047A00	047A00	047A00
			115A00	33.0	30.3	047A00	047A00	047A00	050A00
			114A00,116A00	41.7	38.3	050A00	050A00	050A00	050A00
	575–3–60	STD	118A00	17.0	17.0	047A00	047A00	047A00	047A00
			119A00	34.0	34.0	047A00	047A00	047A00	050A00
		MED	118A00	17.0	17.0	047A00	047A00	047A00	047A00
			119A00	34.0	34.0	047A00	047A00	047A00	050A00
		HIGH	118A00	17.0	17.0	047A00	047A00	047A00	047A00
			119A00	34.0	34.0	047A00	047A00	047A00	050A00

LEGEND

APP PWR – 208 / 230V / 460V / 575V
C.O. – Convenient outlet
FLA – Full load amps
IFM – Indoor fan motor
NOM PWR – 240V / 480V / 600V
P.E. – Power exhaust
PWRD – Powered convenient outlet
UNPWRD – Unpowered convenient outlet

Table 14 – ELECTRIC HEAT - ELECTRICAL DATA — 10 TONS

UNIT	NOM. V – PH – HZ	IFM TYPE	ELECTRIC HEATER PART NUMBER CRHEATERXXXXXX	NOM PWR (kW)	APP PWR (kW)	SINGLE POINT KIT PART NUMBER CRSINGLEXXXXXX			
						NO C.O. or UNPWRD C.O.		w/PWRD C.O.	
						NO P.E.	w/P.E. (pwrd fr/unit)	NO P.E.	w/P.E. (pwrd fr/unit)
50HCD–12	208/230–3–60	STD	117A00	10.4	7.8/9.6	047A00	047A00	047A00	047A00
			110A00	16.0	12.0/14.7	047A00	047A00	049A00	049A00
			112A00	32.0	24.0/29.4	049A00	049A00	049A00	049A00
			112A00,117A00	42.4	31.8/38.9	051A00	051A00	051A00	051A00
			112A00,110A00	50.0	37.6/45.9	051A00	051A00	051A00	051A00
		MED	117A00	10.4	7.8/9.6	047A00	047A00	049A00	049A00
			110A00	16.0	12.0/14.7	049A00	049A00	049A00	049A00
			112A00	32.0	24.0/29.4	049A00	049A00	049A00	049A00
			112A00,117A00	42.4	31.8/38.9	051A00	051A00	051A00	051A00
			112A00,110A00	50.0	37.6/45.9	051A00	051A00	051A00	051A00
		HIGH	117A00	10.4	7.8/9.6	049A00	049A00	049A00	049A00
			110A00	16.0	12.0/14.7	049A00	049A00	049A00	049A00
			112A00	32.0	24.0/29.4	049A00	049A00	049A00	049A00
			112A00,117A00	42.4	31.8/38.9	051A00	051A00	051A00	051A00
			112A00,110A00	50.0	37.6/45.9	051A00	051A00	051A00	051A00
	460–3–60	STD	116A00	13.9	12.8	047A00	047A00	047A00	047A00
			113A00	16.5	15.2	047A00	047A00	047A00	047A00
			115A00	33.0	30.3	047A00	047A00	047A00	047A00
			115A00,116A00	41.7	38.3	050A00	050A00	050A00	050A00
			115A00,113A00	50.0	45.9	050A00	050A00	050A00	050A00
		MED	116A00	13.9	12.8	047A00	047A00	047A00	047A00
			113A00	16.5	15.2	047A00	047A00	047A00	047A00
			115A00	33.0	30.3	047A00	047A00	047A00	050A00
			114A00,116A00	41.7	38.3	050A00	050A00	050A00	050A00
			115A00,113A00	50.0	45.9	050A00	050A00	050A00	050A00
		HIGH	116A00	13.9	12.8	047A00	047A00	047A00	047A00
			113A00	16.5	15.2	047A00	047A00	047A00	047A00
			115A00	33.0	30.3	047A00	050A00	050A00	050A00
			114A00,116A00	41.7	38.3	050A00	050A00	050A00	050A00
			115A00,113A00	50.0	45.9	050A00	050A00	050A00	050A00
	575–3–60	STD	118A00	17.0	17.0	047A00	047A00	047A00	047A00
			119A00	34.0	34.0	047A00	047A00	047A00	050A00
			118A00,119A00	51.0	51.0	050A00	050A00	050A00	050A00
		MED	118A00	17.0	17.0	047A00	047A00	047A00	047A00
			119A00	34.0	34.0	047A00	047A00	047A00	050A00
			118A00,119A00	51.0	51.0	050A00	050A00	050A00	050A00
		HIGH	118A00	17.0	17.0	047A00	047A00	047A00	047A00
			119A00	34.0	34.0	047A00	050A00	050A00	050A00
			118A00,119A00	51.0	51.0	050A00	050A00	050A00	050A00

LEGEND

APP PWR – 208 / 230V / 460V / 575V
C.O. – Convenient outlet
FLA – Full load amps
IFM – Indoor fan motor
NOM PWR – 240V / 480V / 600V
P.E. – Power exhaust
PWRD – Powered convenient outlet
UNPWRD – Unpowered convenient outlet

Table 15 – ELECTRIC HEAT - ELECTRICAL DATA 12.5 TONS

UNIT	NOM. V – PH – HZ	IFM TYPE	ELECTRIC HEATER PART NUMBER CRHEATERXXXXXX	NOM PWR (kW)	APP PWR (kW)	SINGLE POINT KIT PART NUMBER CRSINGLEXXXXXX			
						NO C.O. or UNPWRD C.O.		w/PWRD C.O.	
						NO P.E.	w/P.E. (pwrd fr/unit)	NO P.E.	w/P.E. (pwrd fr/unit)
50HCD–14	208/230–3–60	STD	291A00	16.5	12.4/15.2	–	049A00	049A00	049A00
			288A00,291A00	26.5	19.9/24.3	049A00	049A00	049A00	049A00
			294A00	33.5	25.2/30.8	049A00	049A00	049A00	049A00
			288A00,294A00	43.5	32.7/40.0	051A00	051A00	051A00	051A00
			291A00,294A00	50.0	37.6/45.9	051A00	051A00	051A00	051A00
		MED	291A00	16.5	12.4/15.2	049A00	049A00	049A00	049A00
			288A00,291A00	26.5	19.9/24.3	049A00	049A00	049A00	049A00
			294A00	33.5	25.2/30.8	049A00	049A00	049A00	049A00
			288A00,294A00	43.5	32.7/40.0	051A00	051A00	051A00	051A00
			291A00,294A00	50.0	37.6/45.9	051A00	051A00	051A00	051A00
		HIGH	291A00	16.5	12.4/15.2	049A00	049A00	049A00	049A00
			288A00,291A00	26.5	19.9/24.3	049A00	049A00	049A00	049A00
			294A00	33.5	25.2/30.8	049A00	049A00	049A00	049A00
			288A00,294A00	43.5	32.7/40.0	051A00	051A00	051A00	051A00
			291A00,294A00	50.0	37.6/45.9	051A00	051A00	051A00	051A00
	460–3–60	STD	292A00	16.5	15.2	–	–	–	–
			289A00,292A00	26.5	24.3	047A00	047A00	047A00	047A00
			295A00	33.5	30.8	047A00	047A00	047A00	047A00
			289A00,295A00	43.5	40.0	050A00	050A00	050A00	050A00
			292A00,295A00	50.0	45.9	050A00	050A00	050A00	050A00
		MED	292A00	16.5	15.2	–	–	–	–
			289A00,292A00	26.5	24.3	047A00	047A00	047A00	047A00
			295A00	33.5	30.8	047A00	047A00	047A00	050A00
			289A00,295A00	43.5	40.0	050A00	050A00	050A00	050A00
			292A00,295A00	50.0	45.9	050A00	050A00	050A00	050A00
		HIGH	292A00	16.5	15.2	–	–	–	–
			289A00,292A00	26.5	24.3	047A00	047A00	047A00	047A00
			295A00	33.5	30.8	050A00	050A00	050A00	050A00
			289A00,295A00	43.5	40.0	050A00	050A00	050A00	050A00
			292A00,295A00	50.0	45.9	050A00	050A00	050A00	050A00
	575–3–60	STD	293A00	16.5	15.2	–	–	–	–
			290A00,293A00	26.5	24.3	047A00	047A00	047A00	047A00
			296A00	33.5	30.8	047A00	047A00	047A00	047A00
			290A00,296A00	43.5	40.0	047A00	050A00	047A00	050A00
			293A00,296A00	50.0	45.9	047A00	047A00	047A00	047A00
		MED	293A00	16.5	15.2	–	–	–	–
			290A00,293A00	26.5	24.3	047A00	047A00	047A00	047A00
			296A00	33.5	30.8	047A00	047A00	047A00	047A00
			290A00,296A00	43.5	40.0	047A00	050A00	047A00	050A00
			293A00,296A00	50.0	45.9	047A00	047A00	047A00	047A00
		HIGH	293A00	16.5	15.2	–	–	–	–
			290A00,293A00	26.5	24.3	047A00	047A00	047A00	047A00
			296A00	33.5	30.8	047A00	047A00	047A00	047A00
			290A00,296A00	43.5	40.0	050A00	050A00	050A00	050A00
			293A00,296A00	50.0	45.9	050A00	050A00	050A00	050A00

LEGEND

APP PWR – 208 / 230V / 460V / 575V
C.O. – Convenient outlet
FLA – Full load amps
IFM – Indoor fan motor
NOM PWR – 240V / 480V / 600V
P.E. – Power exhaust
PWRD – Powered convenient outlet
UNPWRD – Unpowered convenient outlet

CURBS & WEIGHTS DIMENSIONS - 50HC 04-06

NOTES:

1. DIMENSIONS ARE IN INCHES, DIMENSIONS IN [ ] ARE IN MILLIMETERS.
2. CENTER OF GRAVITY
3. DIRECTION OF AIR FLOW

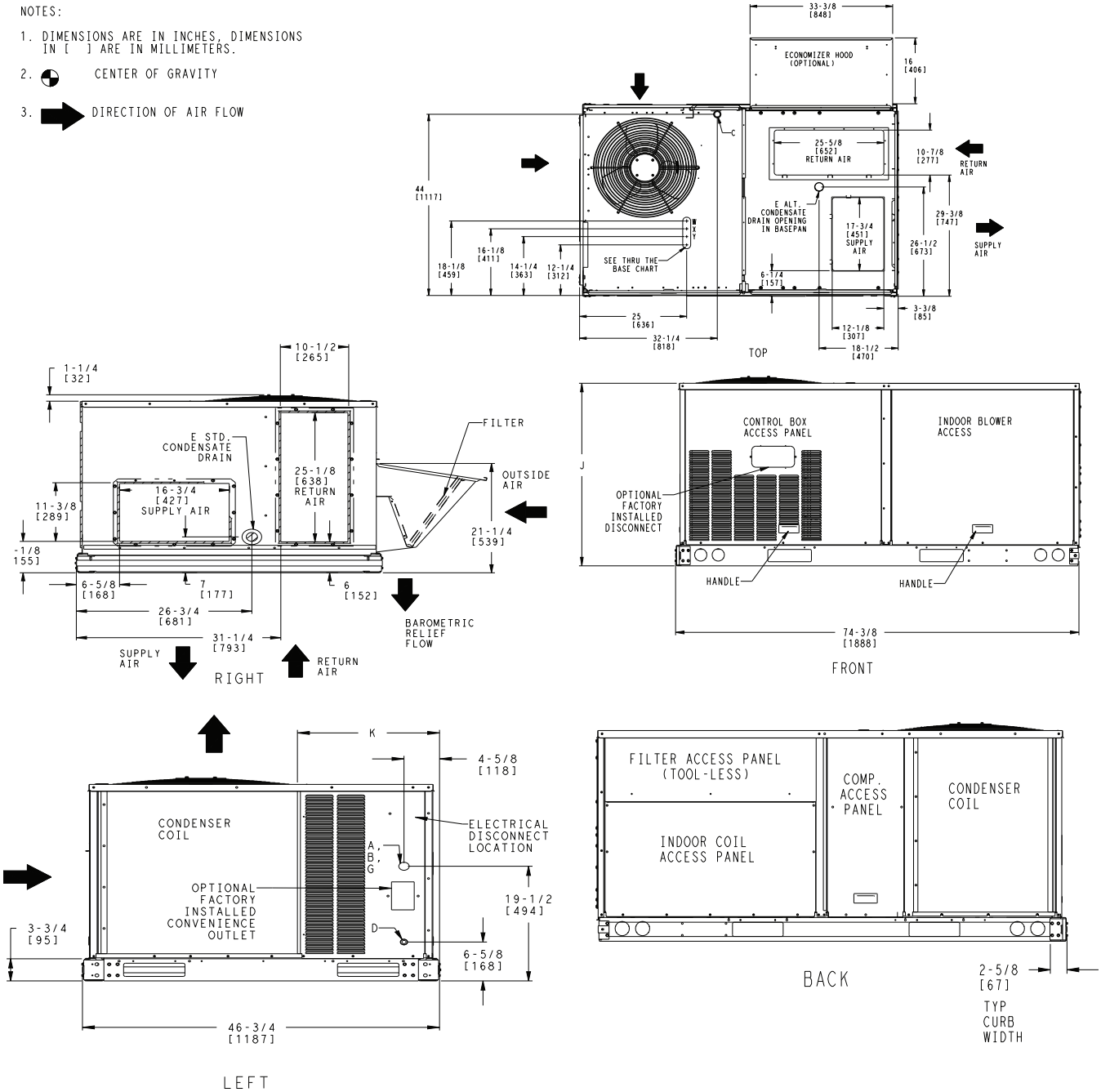

	CONNECTION SIZES
A	1 3/8" [35] DIA FIELD POWER SUPPLY HOLE
B	2" [51] DIA POWER SUPPLY KNOCKOUT
C	1 3/4" [44] DIA GAUGE ACCESS PLUG
D	7/8" [22] DIA FIELD CONTROL WIRING HOLE
E	3/4"-14 NPT CONDENSATE DRAIN
G	2 1/2 " [64] DIA POWER SUPPLY KNOCK-OUT

THRU-THE-BASE CHART THESE HOLES REQUIRED FOR USE CRBTMPWR001A01			
	THREADED CONDUIT SIZE	WIRE USE	REQ'D HOLE SIZES (MAX.)
W	1/2"	ACC.	7/8" [22.2]
X	1/2"	24V	7/8" [22.2]
Y *	3/4" (001)	POWER	1 1/8" [28.4]
	FOR "THRU-THE-BASEPAN" FACTORY OPTION, FITTINGS FOR ONLY X & Y ARE PROVIDED		
*	SELECT EITHER 3/4" OR 1/2" FOR POWER, DEPENDING ON WIRE SIZE		

UNIT	J	K
50HC-A04	33 3/8 [847]	18 5/8 [472]
50HC-A05	41 3/8 [1051]	14 7/8 [377]
50HC-A06	41 3/8 [1051]	14 7/8 [377]

C10223

Fig. 1 - Dimensions 50HC 04-06

CURBS & WEIGHTS DIMENSIONS - 50HC 04-06 (cont.)

UNIT	STD. UNIT WEIGHT		CORNER WEIGHT (A)		CORNER WEIGHT (B)		CORNER WEIGHT (C)		CORNER WEIGHT (D)		C.G.		HEIGHT
	LBS.	KG.	LBS.	KG.	LBS.	KG.	LBS.	KG.	LBS.	KG.	X	Y	Z
50HC-A04	458	208	128	58	109	49	101	46	120	54	34 1/8 [867]	22 1/2 [572]	19 3/4 [502]
50HC-A05	545	247	156	71	135	61	118	54	136	62	34 5/8 [879]	21 3/4 [552]	20 7/8 [530]
50HC-A06	550	249	160	73	136	62	117	53	138	63	34 1/8 [867]	21 5/8 [549]	20 1/4 [514]

*- STANDARD UNIT WEIGHT IS WITHOUT ELECTRIC HEAT AND WITHOUT PACKAGING.
FOR OTHER OPTIONS AND ACCESSORIES REFER TO THE PRODUCT DATA CATALOG.

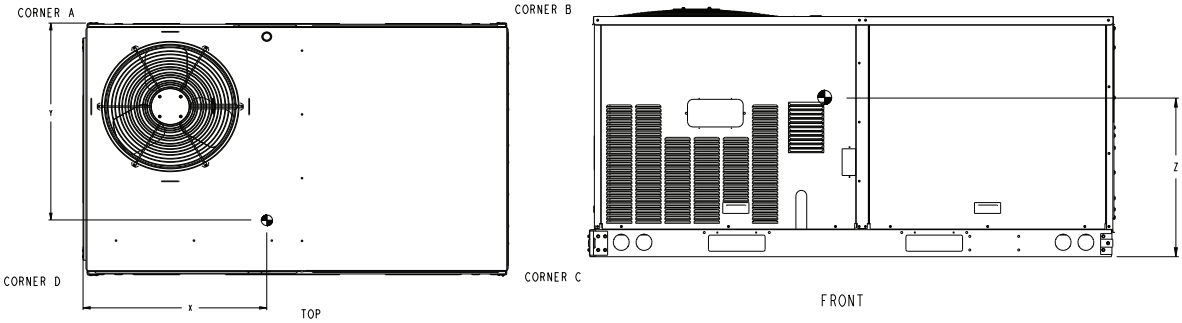

C10224

Fig. 2 - Dimensions 50HC 04-06

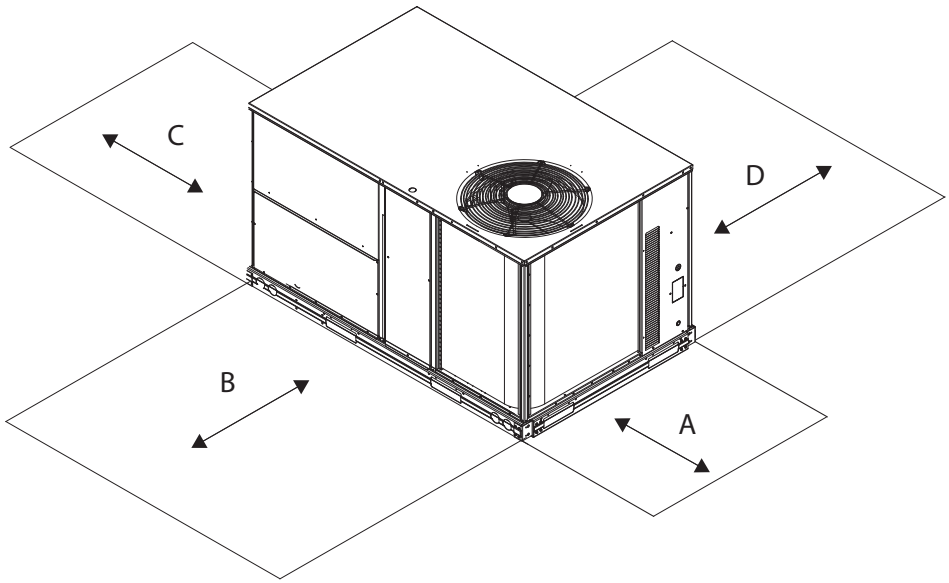

C08337

Fig. 3 - Service Clearance

LOC	DIMENSION	CONDITION
A	48–in (1219 mm)	Unit disconnect is mounted on panel
	18–in (457 mm)	No disconnect, convenience outlet option
	18–in (457 mm)	Recommended service clearance
	12–in (305 mm)	Minimum clearance
B	42–in (1067 mm)	Surface behind servicer is grounded (e.g., metal, masonry wall)
	36–in (914 mm)	Surface behind servicer is electrically non–conductive (e.g., wood, fiberglass)
	Special	Check for sources of flue products within 10–ft of unit fresh air intake hood
C	36–in (914 mm)	Side condensate drain is used
	18–in (457 mm)	Minimum clearance
D	48–in (1219 mm)	No flue discharge accessory installed, surface is combustible material
	42–in (1067 mm)	Surface behind servicer is grounded (e.g., metal, masonry wall, another unit)
	36–in (914 mm)	Surface behind servicer is electrically non–conductive (e.g., wood, fiberglass)
	Special	Check for adjacent units or building fresh air intakes within 10–ft of this unit's flue outlet

CURBS & WEIGHTS DIMENSIONS - 50HC 04-06 (cont.)

CONNECTOR PKG. ACCY.	B	C	D ALT DRAIN HOLE	POWER	CONTROL	ACCESSORY POWER
CRBTMPWR001A01	2'-8 7/16" [827]	1'-10 15/16" [583]	1 3/4" [44.5]	3/4" [19] NPT	1/2" [12.7] NPT	1/2" [12.7] NPT
CRBTMPWR003A01	1'-9 11/16" [551]	1'-4" [406]	1 3/4" [44.5]	3/4" [19] NPT	1/2" [12.7] NPT	1/2" [12.7] NPT

ROOF CURB ACCESSORY	A	UNIT SIZE
CRRFCURB001A01	1'-2" [356]	50HC A04-A06
CRRFCURB002A01	2'-0" [610]	

NOTES:
1. Roof curb accessory is shipped disassembled.
2. Insulated panels.
3. Dimensions in [ ] are in millimeters.
4. Roof curb: galvanized steel.
5. Attach ductwork to curb (flanges of duct rest on curb).
6. Service clearance: 4 ft on each side.
7. Direction of airflow.

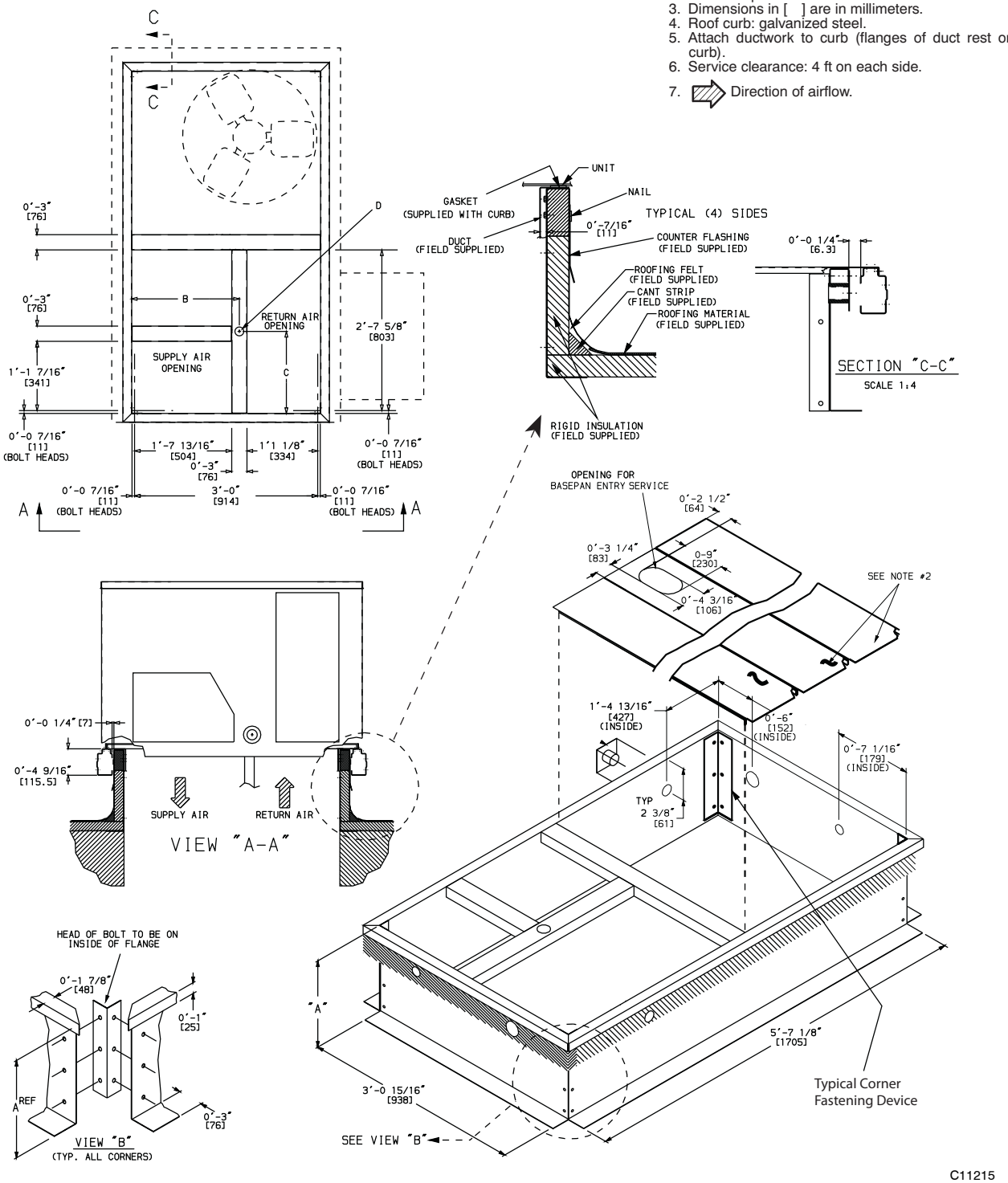

Fig. 4 - Roof Curb Details

50HC

CURBS & WEIGHTS DIMENSIONS - 50HC 07-09

NOTES:

1. DIMENSIONS ARE IN INCHES, DIMENSIONS IN [ ] ARE IN MILLIMETERS.
2. CENTER OF GRAVITY
3. DIRECTION OF AIR FLOW

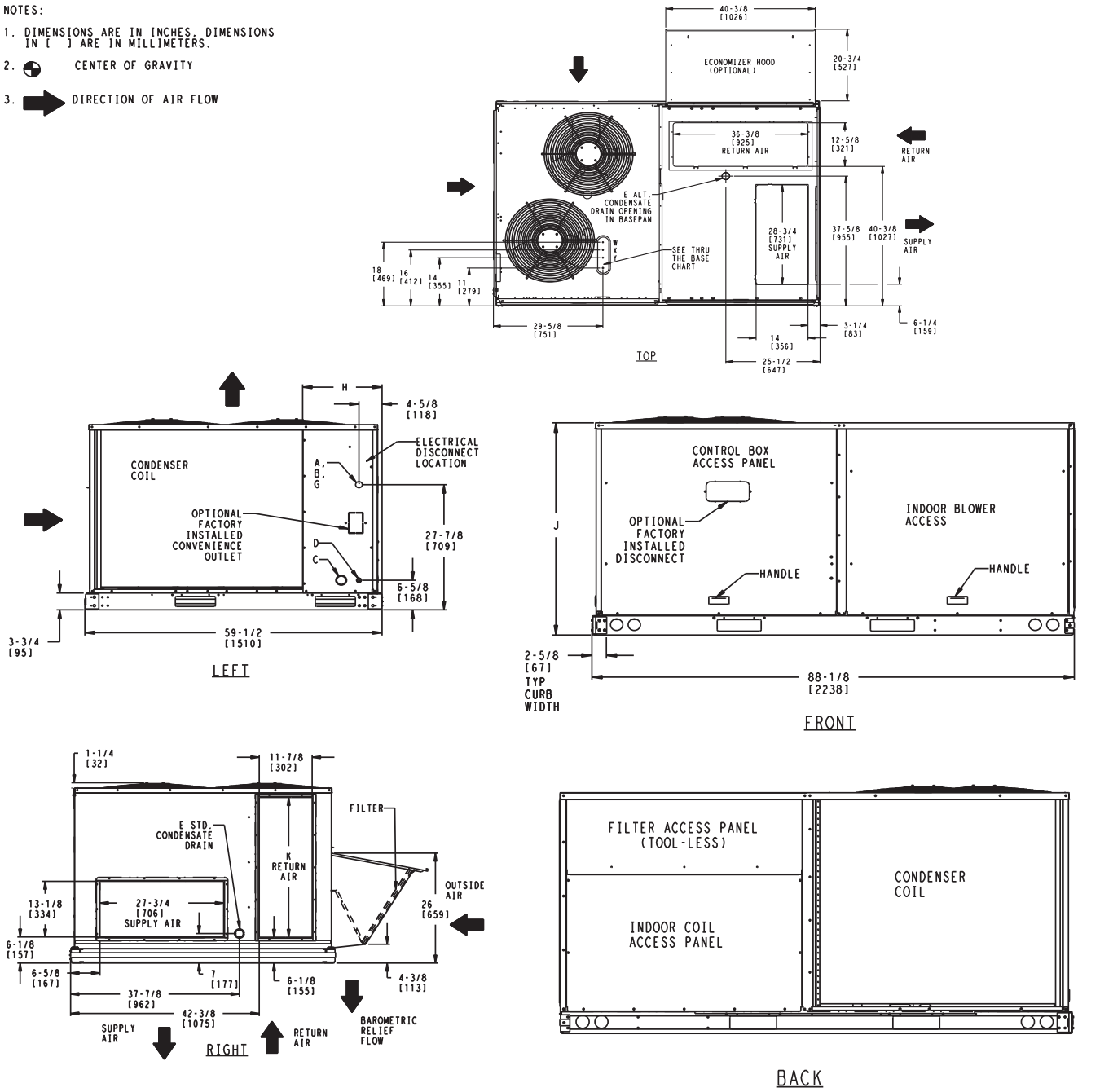

	CONNECTION SIZES
A	1 3/8" [35] DIA FIELD POWER SUPPLY HOLE
B	2 1/2" [64] DIA POWER SUPPLY KNOCKOUT
C	1 3/4" [51] DIA GAUGE ACCESS PLUG
D	7/8" [22] DIA FIELD CONTROL WIRING HOLE
E	3/4"-14 NPT CONDENSATE DRAIN
G	2 " [51] DIA POWER SUPPLY KNOCK-OUT

THRU-THE-BASE CHART (FIELD INST)

THESE HOLES REQUIRED FOR USE WITH ACCY KITS:
CRBTMPWR001A01: 07
CRBTMPWR002A01: 08,09

	THREADED CONDUIT SIZE	WIRE USE	REQ'D HOLE SIZES (MAX.)
W	1/2"	ACC.	7/8" [22.2]
X	1/2"	24V	7/8" [22.2]
Y	3/4" (001) 1 1/4" (002)	POWER	1 1/8" [28.6] 1 3/4" [44.4]

THRU-THE-BASE CHART (FIOP)

FOR "THRU-THE-BASEPAN" FACTORY OPTION, FITTINGS FOR ONLY X & Y ARE PROVIDED: (1) 1/2" & (1) 1 1/4" ELECTRICAL FITTINGS.

UNIT	J	K	H
50HC-A07	41 1/4 [1048]	33 [658]	15 7/8 [403]
50HC-D08	49 3/8 [1253]	36 3/8 [925]	15 7/8 [403]
50HC-D09	49 3/8 [1253]	36 3/8 [925]	15 7/8 [403]

C10519

Fig. 5 - Dimensions 50HC 07-09

CURBS & WEIGHTS DIMENSIONS - 50HC 07-09 (cont.)

UNIT	STD. UNIT WEIGHT *		CORNER WEIGHT (A)		CORNER WEIGHT (B)		CORNER WEIGHT (C)		CORNER WEIGHT (D)		C.G.		
	LBS.	KG.	LBS.	KG.	LBS.	KG.	LBS.	KG.	LBS.	KG.	X	Y	Z
50HC-A07	715	324.3	161.3	73.2	142.4	64.6	192.9	87.5	218.5	99.1	41 3/8 [1051]	34 1/4 [870]	20 1/2 [521]
50HC-D08	860	390	199.4	90.4	176.4	80	227.3	103	256.9	116.5	41 3/8 [1051]	33 1/2 [851]	23 3/4 [603]
50HC-D09	860	390	199.4	90.4	176.4	80	227.3	103	256.9	116.5	41 3/8 [1051]	33 1/2 [851]	23 3/4 [603]

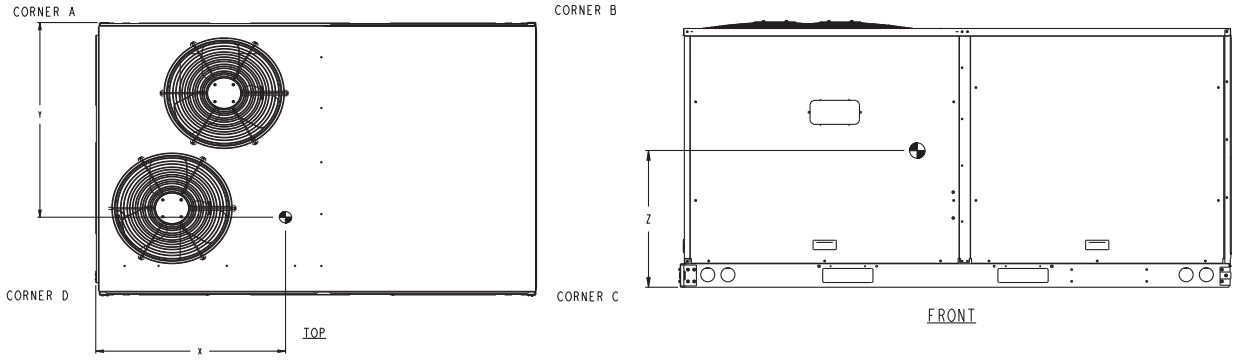

C10226

Fig. 6 - Dimensions 50HC 07-09

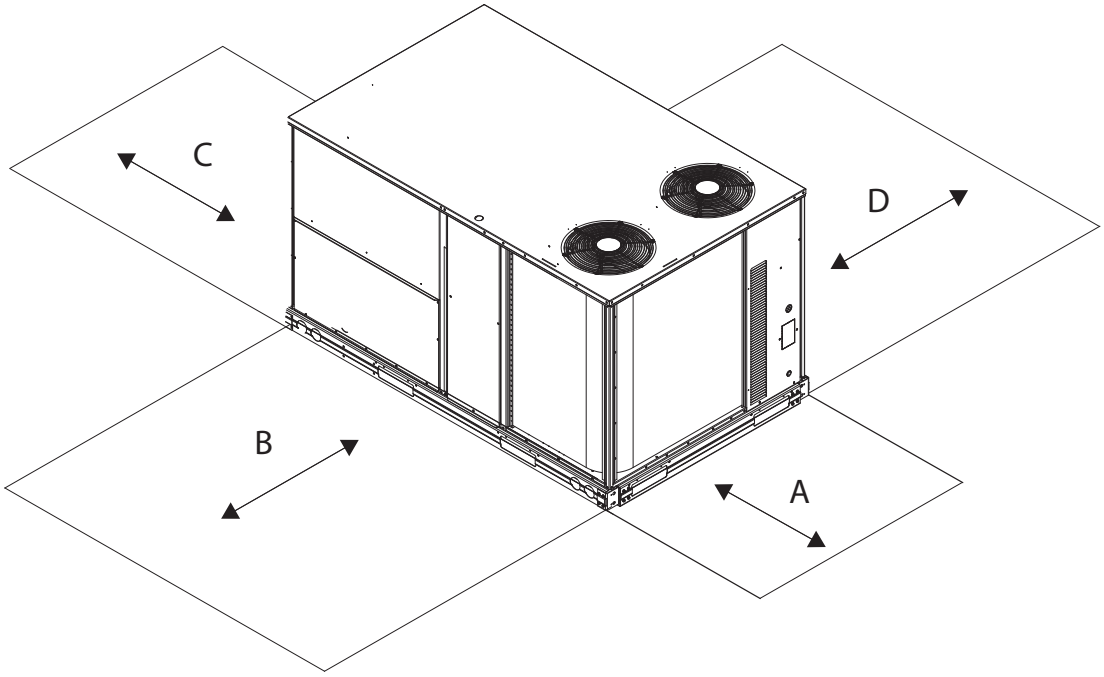

C10577

Fig. 7 - Service Clearance

LOC	DIMENSION	CONDITION
A	48–in (1219 mm)	Unit disconnect is mounted on panel
	18–in (457 mm)	No disconnect, convenience outlet option
	18–in (457 mm)	Recommended service clearance
	12–in (305 mm)	Minimum clearance
B	42–in (1067 mm)	Surface behind servicer is grounded (e.g., metal, masonry wall)
	36–in (914 mm)	Surface behind servicer is electrically non–conductive (e.g., wood, fiberglass)
	Special	Check for sources of flue products within 10–ft of unit fresh air intake hood
C	36–in (914 mm)	Side condensate drain is used
	18–in (457 mm)	Minimum clearance
D	48–in (1219 mm)	No flue discharge accessory installed, surface is combustible material
	42–in (1067 mm)	Surface behind servicer is grounded (e.g., metal, masonry wall, another unit)
	36–in (914 mm)	Surface behind servicer is electrically non–conductive (e.g., wood, fiberglass)
	Special	Check for adjacent units or building fresh air intakes within 10–ft of this unit's flue outlet

CURBS & WEIGHTS DIMENSIONS - 50HC 07-09 (cont.)

ROOFCURB ACCESSORY	A	UNIT SIZE
CRRFCURB003A01	1' - 2" [356]	50HC*A07 50HC*D08-09
CRRFCURB004A01	2' - 0" [610]	

NOTES:
1. ROOFCURB ACCESSORY IS SHIPPED DISASSEMBLED.
2. INSULATED PANELS: 1" THK. POLYURETHANE FOAM, 1-3/4 # DENSITY.
3. DIMENSIONS IN [ ] ARE IN MILLIMETERS.
4. ROOFCURB: 16 GAGE STEEL.
5. ATTACH DUCTWORK TO CURB. (FLANGES OF DUCT REST ON CURB)
6. SERVICE CLEARANCE 4' ON EACH SIDE.
7. ▨ DIRECTION OF AIR FLOW.

CONNECTOR PKG. ACC.	B	C	D ALT DRAIN HOLE	POWER	CONTROL	ACCESSORY PWR
CRBTMPWR002A01	2'-8 7/16" [827]	1'-10 15/16" [583]	1 3/4" [44.5]	1 1/4 [31.7]	1/2" [12.7] NPT	1/2" [12.7] NPT
CRBTMPWR004A01	↓	↓	↓	↓	↓	↓

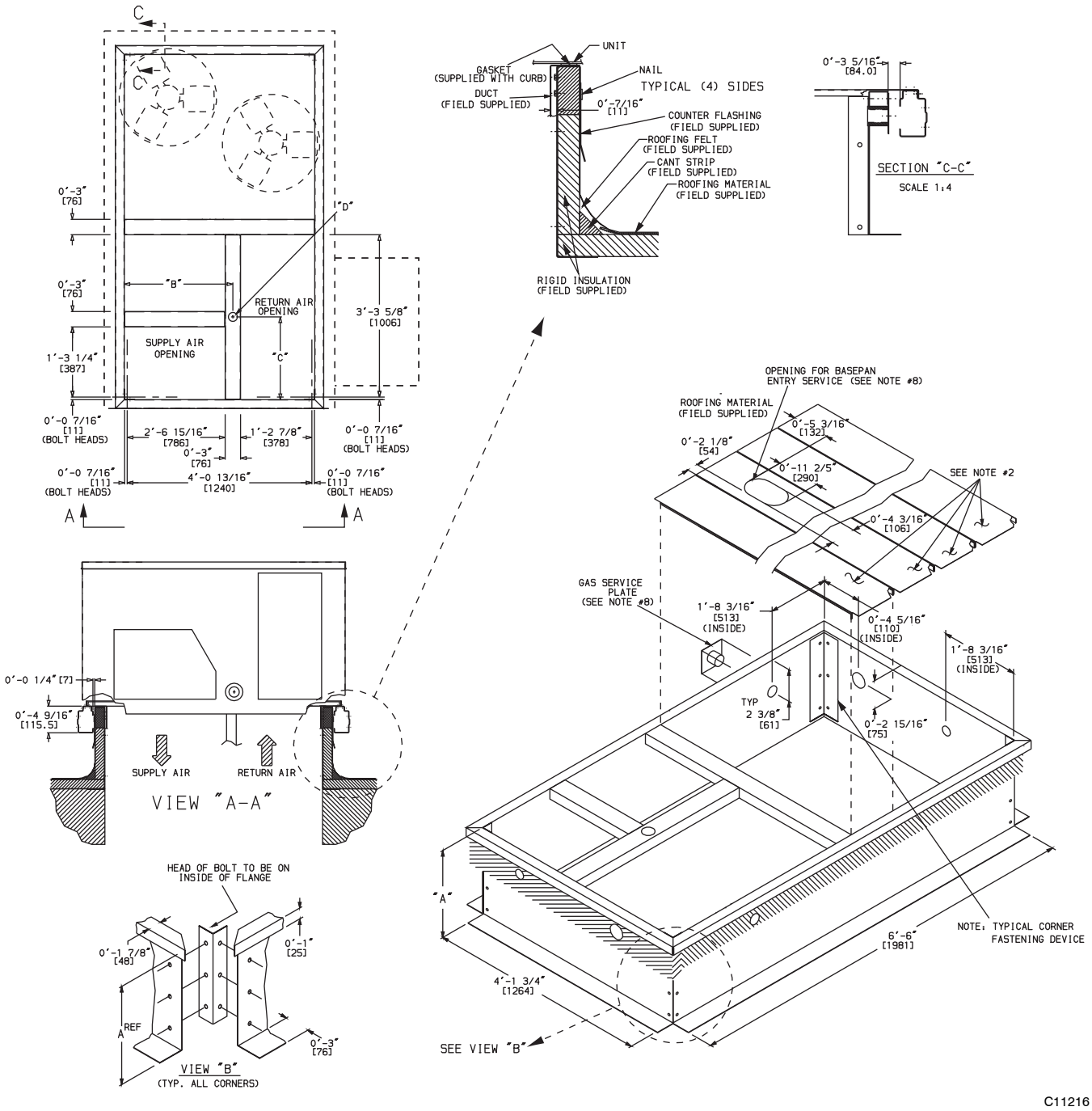

Fig. 8 - Roof Curb Details

CURBS & WEIGHTS DIMENSIONS - 50HC 12

NOTES:

1. DIMENSIONS ARE IN INCHES, DIMENSIONS IN [ ] ARE IN MILLIMETERS.
2. CENTER OF GRAVITY
3. DIRECTION OF AIR FLOW

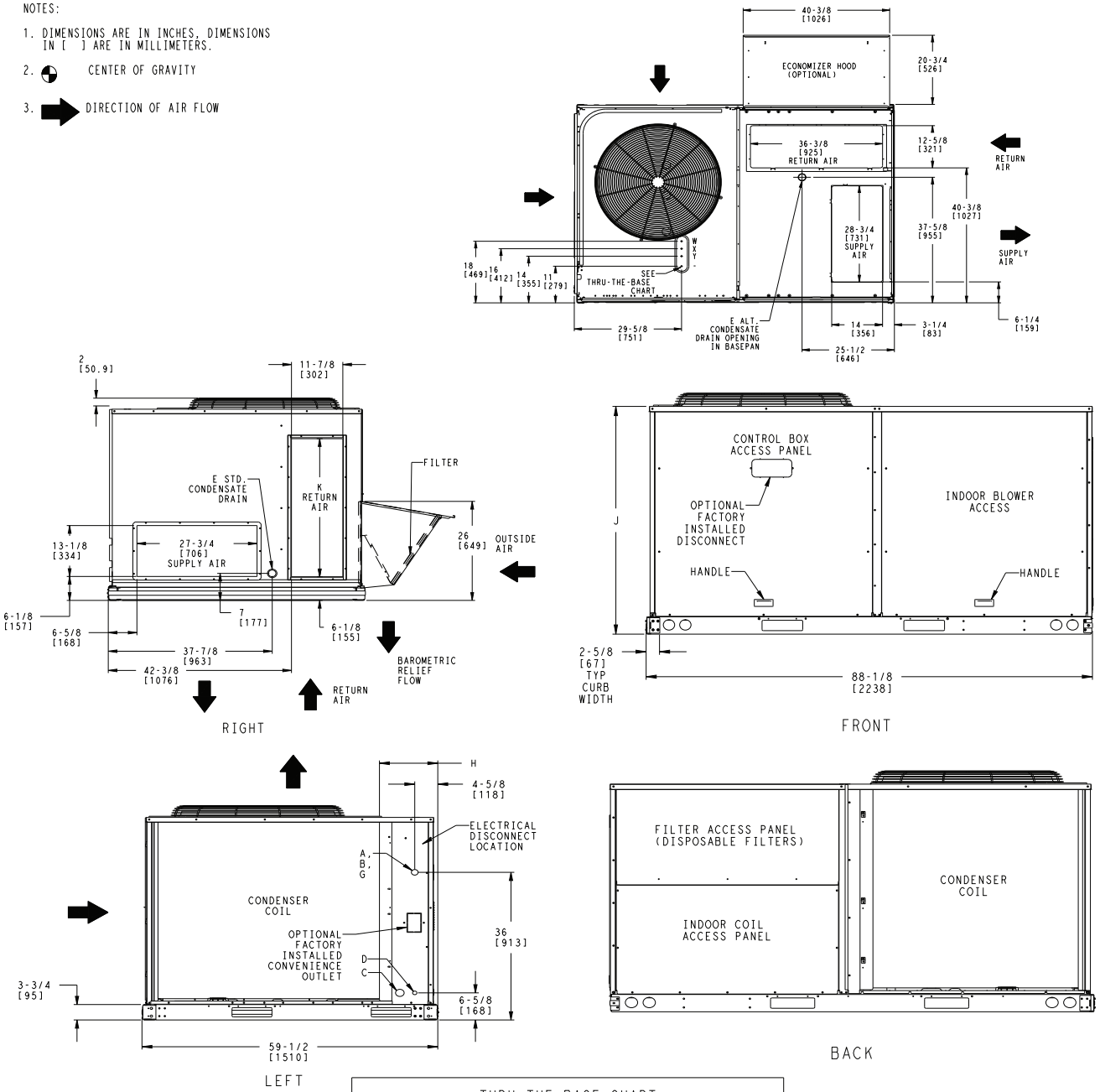

	CONNECTION SIZES
A	1 3/8" [35] DIA FIELD POWER SUPPLY HOLE
B	2 1/2" [64] DIA POWER SUPPLY KNOCKOUT
C	1 3/4" [51] DIA GAUGE ACCESS PLUG
D	7/8" [22] DIA FIELD CONTROL WIRING HOLE
E	3/4"-14 NPT CONDENSATE DRAIN
G	2" [51] DIA POWER SUPPLY KNOCK-OUT

THRU-THE-BASE CHART THESE HOLES REQUIRED FOR USE CRBTMPWR002A01			
	THREADED CONDUIT SIZE	WIRE USE	REQ'D HOLE SIZES (MAX.)
W	1/2"	ACC.	7/8" [22.2]
X	1/2"	24V	7/8" [22.2]
Y	1 1/4" (002)	POWER	1 3/4" [44.4]
	FOR "THRU-THE-BASEPAN" FACTORY OPTION, FITTINGS FOR ONLY X & Y ARE PROVIDED		

UNIT	H	J	K
50HC-D12	11 3/8 [289]	49 3/8 [1253]	36-3/8 [925]

C10509

Fig. 9 - Dimensions 50HC 12

CURBS & WEIGHTS DIMENSIONS - 50HC 12 (cont.)

UNIT	STD. UNIT WEIGHT		CORNER WEIGHT (A)		CORNER WEIGHT (B)		CORNER WEIGHT (C)		CORNER WEIGHT (D)		C.G.		
	LBS.	KG.	LBS.	KG.	LBS.	KG.	LBS.	KG.	LBS.	KG.	X	Y	Z
50HC-D12	1025	465	333	151	290	132	187	85	215	98	41 [1041]	23 3/8 [594]	23 3/4 [603]

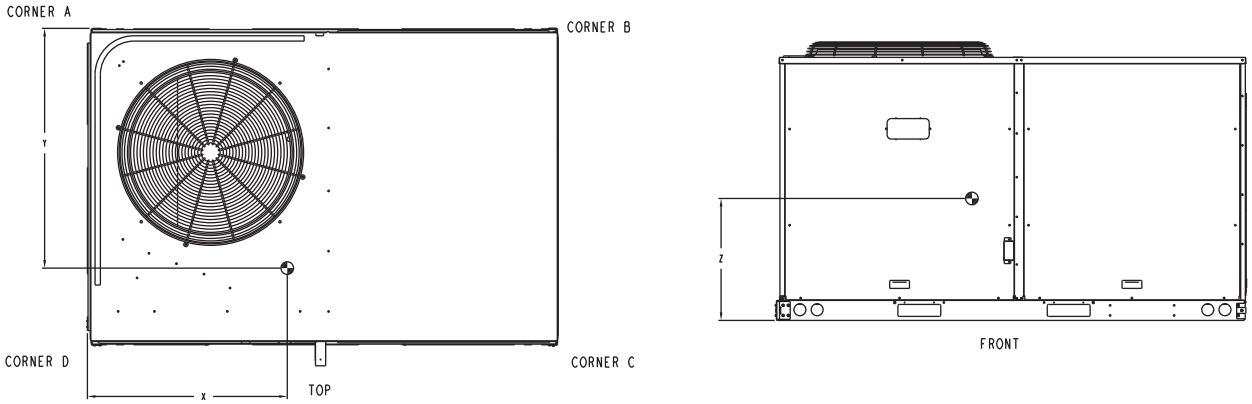

C10156

Fig. 10 - Dimensions 50HC 12

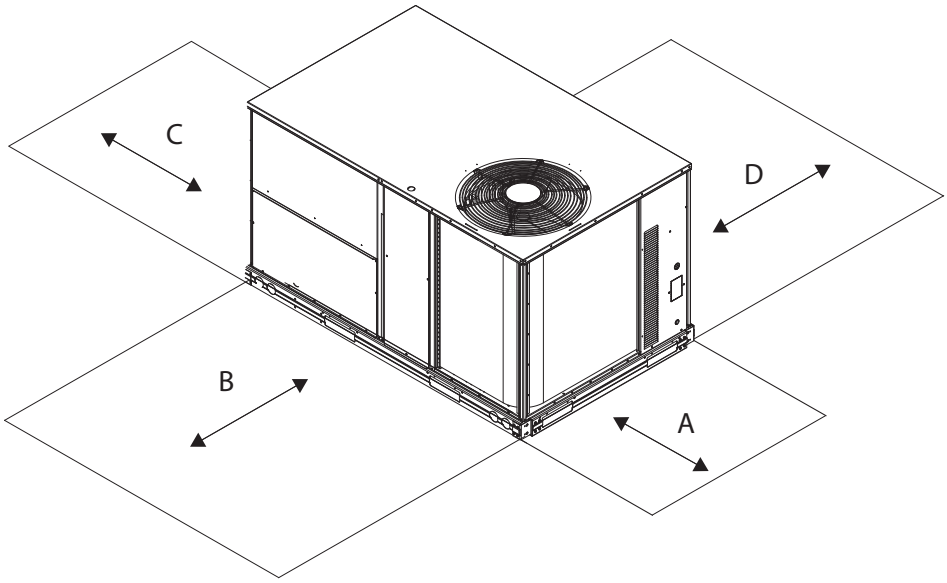

C08337

Fig. 11 - Service Clearance

LOC	DIMENSION	CONDITION
A	48–in (1219 mm)	Unit disconnect is mounted on panel
	18–in (457 mm)	No disconnect, convenience outlet option
	18–in (457 mm)	Recommended service clearance
	12–in (305 mm)	Minimum clearance
B	42–in (1067 mm)	Surface behind servicer is grounded (e.g., metal, masonry wall)
	36–in (914 mm)	Surface behind servicer is electrically non–conductive (e.g., wood, fiberglass)
	Special	Check for sources of flue products within 10–ft of unit fresh air intake hood
C	36–in (914 mm)	Side condensate drain is used
	18–in (457 mm)	Minimum clearance
D	48–in (1219 mm)	No flue discharge accessory installed, surface is combustible material
	42–in (1067 mm)	Surface behind servicer is grounded (e.g., metal, masonry wall, another unit)
	36–in (914 mm)	Surface behind servicer is electrically non–conductive (e.g., wood, fiberglass)
	Special	Check for adjacent units or building fresh air intakes within 10–ft of this unit's flue outlet

CURBS & WEIGHTS DIMENSIONS - 50HC 12 (cont.)

ROOFCURB ACCESSORY	A	UNIT SIZE
CRRFCURB003A01	1' - 2" [356]	50HC*D12
CRRFCURB004A01	2' - 0" [610]	

NOTES:
1. ROOFCURB ACCESSORY IS SHIPPED DISASSEMBLED.
2. INSULATED PANELS: 1" THK. POLYURETHANE FOAM, 1-3/4 # DENSITY.
3. DIMENSIONS IN [ ] ARE IN MILLIMETERS.
4. ROOFCURB: 18 GAGE STEEL ON 14" CURB, AND 16 GAGE STEEL ON 24" CURB.
5. ATTACH DUCTWORK TO CURB. (FLANGES OF DUCT REST ON CURB)
6. SERVICE CLEARANCE 4' ON EACH SIDE.
7. ▨ DIRECTION OF AIR FLOW.

CONNECTOR PKG. ACC.	B	C	D ALT DRAIN HOLE	POWER	CONTROL	ACCESSORY PWR
CRBTMPWR002A01	2'-8 7/16" [827]	1'-10 15/16" [583]	1 3/4" [44.5]	1 1/4" [31.7]	1/2" [12.7] NPT	1/2" [12.7] NPT
CRBTMPWR004A01	↓	↓	↓	↓	↓	↓

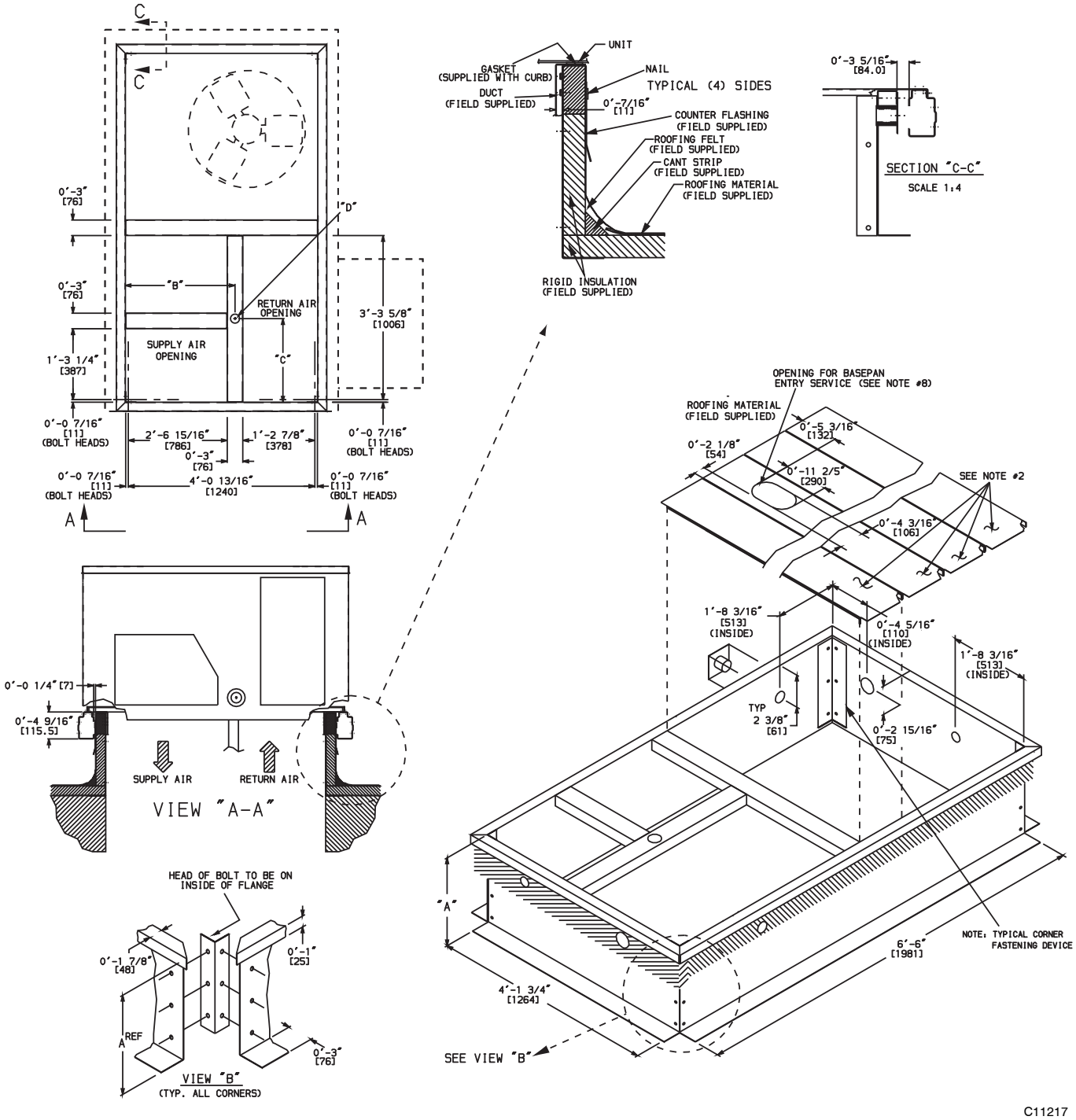

Fig. 12 - Roof Curb Details

CURBS & WEIGHTS DIMENSIONS - 50HC 14

NOTES:

1. DIMENSIONS ARE IN INCHES, DIMENSIONS IN [ ] ARE IN MILLIMETERS.
2. CENTER OF GRAVITY
3. DIRECTION OF AIR FLOW

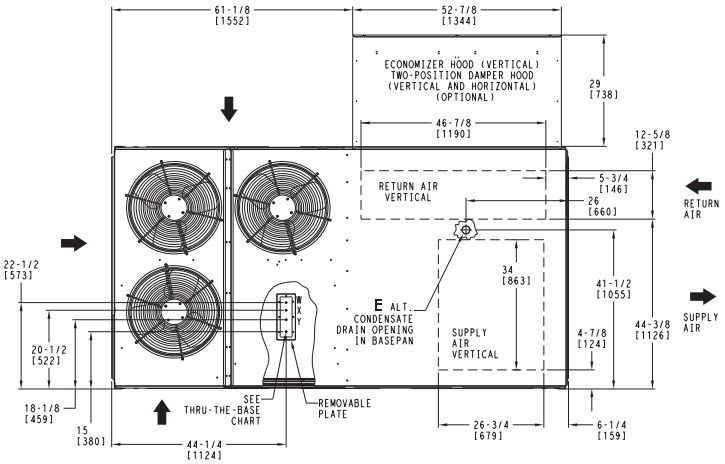

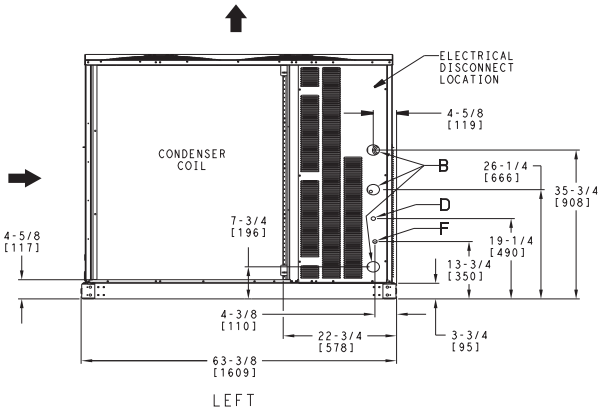

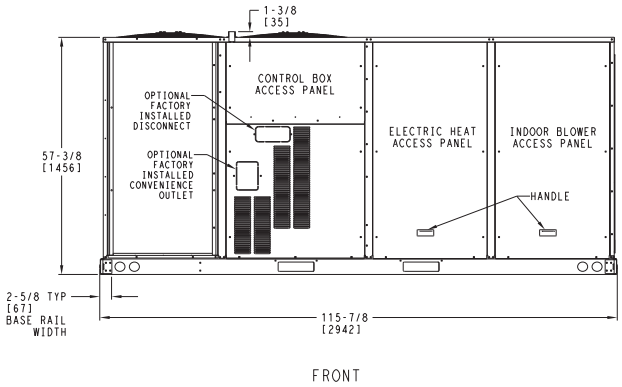

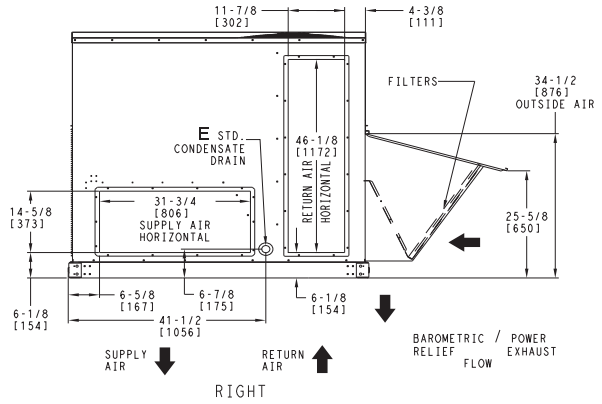

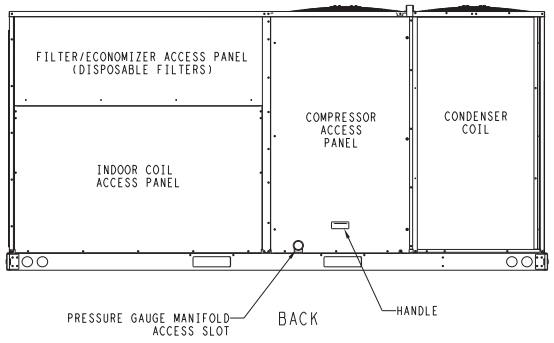

	CONNECTION SIZES
B	2 1/2" [64] DIA POWER SUPPLY HOLE
D	7/8" [22] DIA FIELD CONTROL WIRING HOLE
E	3/4"-14 NPT CONDENSATE DRAIN
F	7/8" [22] DIA FIELD CONVENIENCE OUTLET HOLE

THRU-THE-BASE CHART THESE HOLES REQUIRED FOR USE CRBTMPWR005A00,006A00,007A00				
ACCESSORY NO.		THREADED CONDUIT SIZE	WIRE USE	REQ'D HOLE SIZES (MAX.)
005	W	1/2"	ACC.	7/8" [22.2]
	X	1/2"	24V	7/8" [22.2]
	Y	1 1/4"	POWER	1 1/2" [38.1]
006	W	1/2"	ACC.	7/8" [22.2]
	X	1/2"	24V	7/8" [22.2]
	Y	1 1/2"	POWER	2" [50.8]
007	W	1/2"	ACC.	7/8" [22.2]
	X	1/2"	24V	7/8" [22.2]
	Y	2"	POWER	2 1/2" [63.5]
	FOR "THRU-THE-BASEPAN" FACTORY OPTION, FITTINGS FOR X & Y ARE PROVIDED AS SPECIFIED ON "006".			

C101007

Fig. 13 - Dimensions 50HC 14

CURBS & WEIGHTS DIMENSIONS - 50HC 14 (cont.)

UNIT	STD UNIT WEIGHT		CORNER WEIGHT (A)		CORNER WEIGHT (B)		CORNER WEIGHT (C)		CORNER WEIGHT (D)		C.G.		
	LBS.	KG.	LBS.	KG.	LBS.	KG.	LBS.	KG.	LBS.	KG.	X	Y	Z
50HC 14	1360	617	335	151	361	164	344	156	320	145	60 1/8 [1527]	31 [787]	21 1/8 [536]

STANDARD UNIT WEIGHT IS WITHOUT ELECTRIC HEAT & WITHOUT PACKAGING.
FOR OPTIONS & ACCESSORIES, REFER TO THE PRODUCT DATA CATALOG.

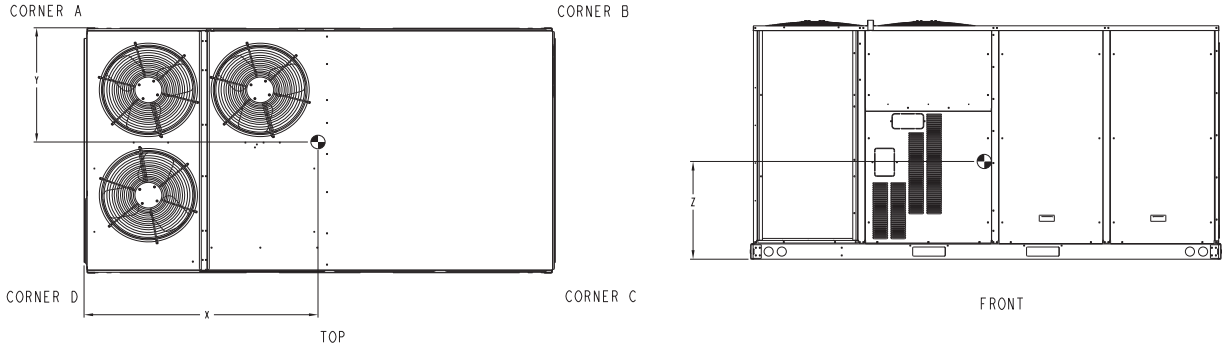

C10771

Fig. 14 - Dimensions 50HC 14

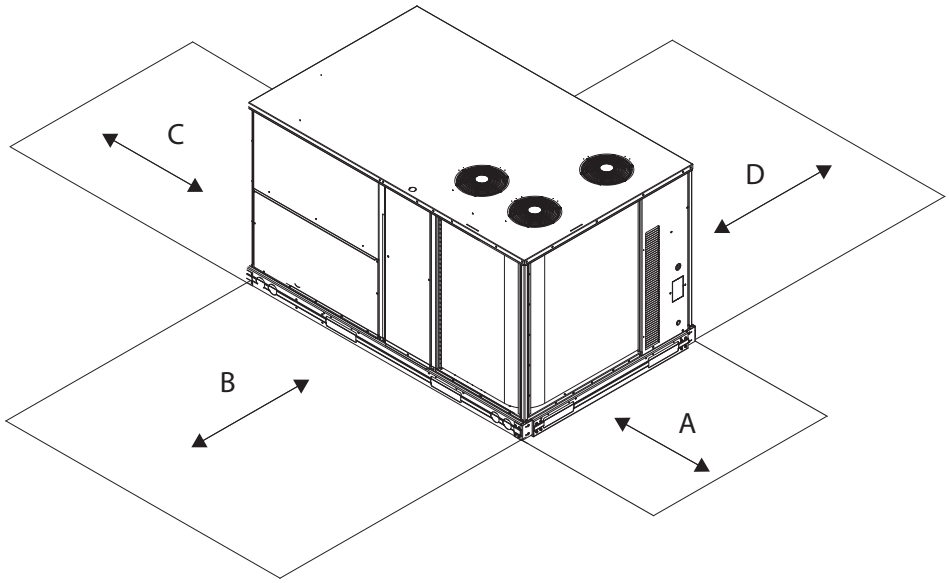

C10578B

Fig. 15 - Service Clearance

LOC	DIMENSION	CONDITION
A	48–in (1219 mm)	Unit disconnect is mounted on panel
	18–in (457 mm)	No disconnect, convenience outlet option
	18–in (457 mm)	Recommended service clearance
	12–in (305 mm)	Minimum clearance
B	42–in (1067 mm)	Surface behind servicer is grounded (e.g., metal, masonry wall)
	36–in (914 mm)	Surface behind servicer is electrically non–conductive (e.g., wood, fiberglass)
	Special	Check for sources of flue products within 10–ft of unit fresh air intake hood
C	36–in (914 mm)	Side condensate drain is used
	18–in (457 mm)	Minimum clearance
D	48–in (1219 mm)	No flue discharge accessory installed or available, surface is combustible material
	42–in (1067 mm)	Surface behind servicer is grounded (e.g., metal, masonry wall, another unit)
	36–in (914 mm)	Surface behind servicer is electrically non–conductive (e.g., wood, fiberglass)
	Special	Check for adjacent units or building fresh air intakes within 10–ft of this unit's flue outlet

CURBS & WEIGHTS DIMENSIONS - 50HC 14 (cont.)

ROOF CURB ACCESSORY #	A
CRRFCURB074A00	14" [356]
CRRFCURB075A00	24" [610]

NOTES:
1. ROOFCURB ACCESSORY IS SHIPPED DISASSEMBLED.
2. INSULATED PANELS: 1/2" THK. NEOPRENE FOAM, 1.0# DENSITY.
3. DIMENSIONS IN [ ] ARE IN MILLIMETERS.
4. ROOFCURB SIDEWALLS: 16 GAGE STEEL.
5. ATTACH DUCTWORK TO CURB. (FLANGES OF DUCT REST ON CURB).
6. SERVICE CLEARANCE 4 FT ON EACH SIDE.
7. ➡ DIRECTION OF AIR FLOW.
8. "L" & "S" DESIGNATIONS DENOTE LOCATION OF COMMON CROSS RAIL. (POSITION "L" FOR LARGE DUCT OPENING CURB).

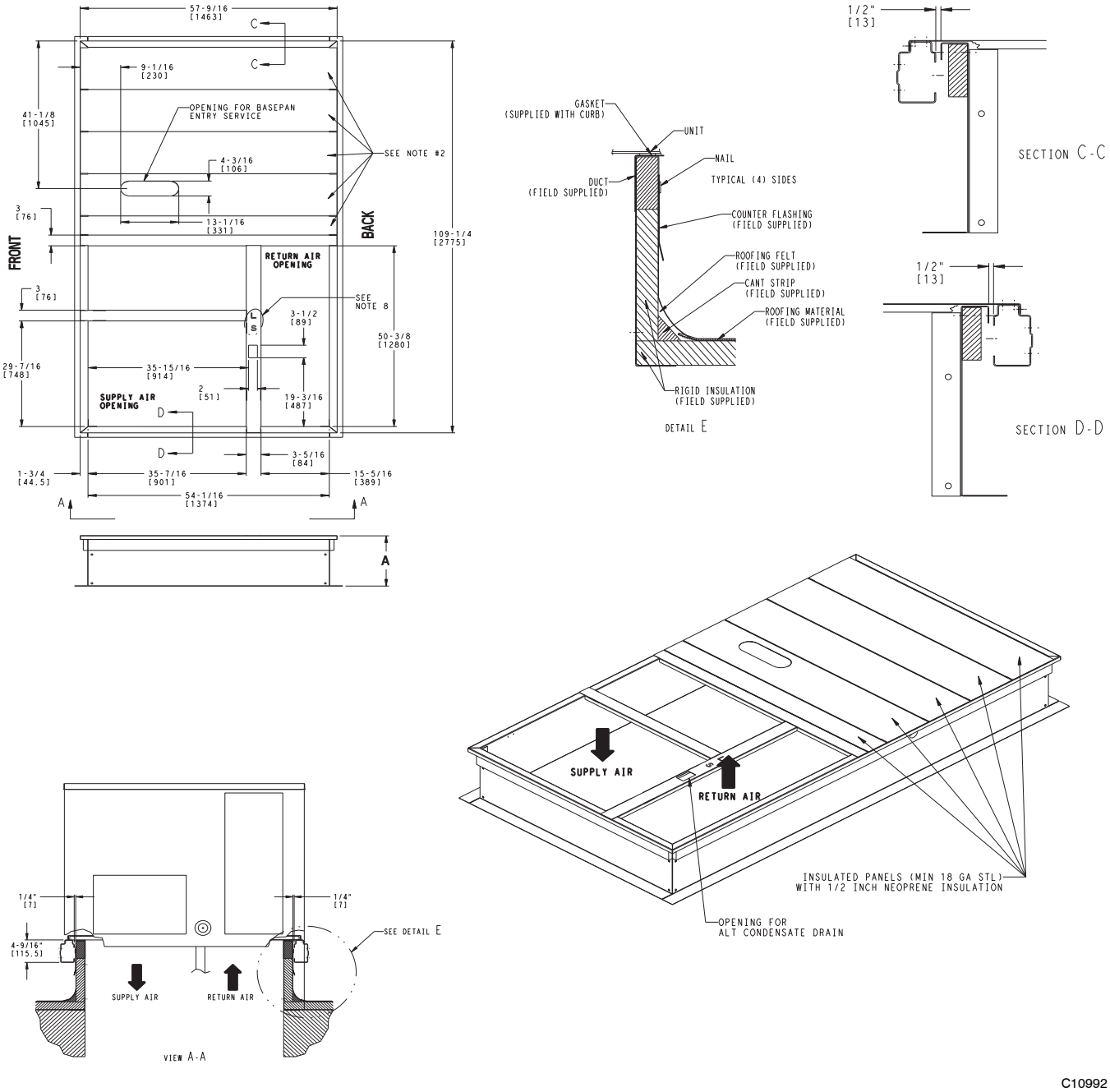

Fig. 16 - Roof Curb Details

OPTIONS & ACCESSORY WEIGHTS

OPTION / ACCESSORY	OPTION / ACCESSORY WEIGHTS															
	04		05		06		07		08		09		12		14	
	lb	kg	lb	kg	lb	kg	lb	kg	lb	kg	lb	kg	lb	kg	lb	kg
Humidi–MiZer[1]	15	7	23	10	25	11	29	13	38	17	47	21	47	21	57	26
Power Exhaust – vertical	50	23	50	23	50	23	75	34	75	34	75	34	75	34	85	39
Power Exhaust – horizontal	30	14	30	14	30	14	30	14	30	14	30	14	30	14	75	34
EconoMi$er (IV or 2)	50	23	50	23	50	23	75	34	75	34	75	34	75	34	115	52
Two Position damper	39	18	39	18	39	18	58	26	58	26	58	26	58	26	65	29
Manual Dampers	12	5	12	5	12	5	18	8	18	8	18	8	18	8	25	11
Hail Guard (louvered)	16	7	16	7	16	7	34	15	34	15	34	15	34	15	45	20
Cu/Cu Condenser Coil	35	16	35	16	35	16	95	43	95	43	95	43	170	77	160	73
Cu/Cu Cond. & Evaporator Coils	60	27	60	27	90	41	140	64	140	64	195	88	270	122	280	127
Roof Curb (14–in. curb)	94	46	94	46	94	46	118	54	118	54	118	54	118	54	118	54
Roof Curb (24–in. curb)	131	59	131	59	131	59	164	74	164	74	164	74	164	74	164	74
CO_2 sensor	5	2	5	2	5	2	5	2	5	2	5	2	5	2	5	2
Electric Heater	30	14	30	14	30	14	45	20	45	20	45	20	45	20	25	11
Single Point Kit	10	5	10	5	10	5	12	5	12	5	12	5	12	5	25	11
Optional Indoor Motor / Drive	10	5	10	5	10	5	15	7	15	7	15	7	15	7	45	20
Motor Master Controller	35	16	35	16	35	16	35	16	35	16	35	16	35	16	40	18
Return Smoke Detector	5	2	5	2	5	2	5	2	5	2	5	2	5	2	5	2
Supply Smoke Detector	5	2	5	2	5	2	5	2	5	2	5	2	5	2	5	2
Fan / Filter Status Switch	2	1	2	1	2	1	2	1	2	1	2	1	2	1	2	1
Non–Fused Disconnect	15	7	15	7	15	7	15	7	15	7	15	7	15	7	10	5
Powered Convenience outlet	35	16	35	16	35	16	35	16	35	16	35	16	35	16	32	15
Non–Powered Convenience outlet	5	2	5	2	5	2	5	2	5	2	5	2	5	2	4	2
Enthalpy Sensor	2	1	2	1	2	1	2	1	2	1	2	1	2	1	2	1
Differential Enthalpy Sensor	3	1	3	1	3	1	3	1	3	1	3	1	3	1	3	1

[1] For Humidi–MiZer add MotorMaster Controller.

APPLICATION DATA

Min operating ambient temp (cooling):

In mechanical cooling mode, your Carrier rooftop can safely operate down to an outdoor ambient temperature of 35°F (-2°C) and 25°F (-4°C), with an accessory winter start kit. It is possible to provide cooling at lower outdoor ambient temperatures by using less outside air, economizers, and/or accessory low ambient kits.

Max operating ambient temp (cooling):

The maximum operating ambient temperature for cooling mode is 125°F (52°C). While cooling operation above 125°F (52°C) may be possible, it could cause either a reduction in performance, reliability, or a protective action by the unit's internal safety devices.

Min and max airflow (cooling mode):

To maintain safe and reliable operation of your rooftop, operate within the cooling airflow limits. Operating above the max may cause blow-off, undesired airflow noise, or airflow related problems with the rooftop unit. Operating below the min may cause problems with coil freeze-up.

Airflow:

All units are draw-though in cooling mode.

Outdoor air application strategies:

Economizers reduce operating expenses and compressor run time by providing a free source of cooling and a means of ventilation to match application changing needs. In fact, they should be considered for most applications. Also, consider the various economizer control methods and their benefits, as well as sensors required to accomplish your application goals. Please contact your local Carrier representative for assistance.

Motor limits, break horsepower (BHP):

Due to Carrier's internal unit design, air path, and specially designed motors, the full horsepower (maximum continuous BHP) band, as listed in Table 6 and 7, can be used with the utmost confidence. There is no need for extra safety factors, as Carrier's motors are designed and rigorously tested to use the entire, listed BHP range without either nuisance tripping or premature motor failure.

Sizing a rooftop

Bigger isn't necessarily better. While an air conditioner needs to have enough capacity to meet the load, it doesn't need excess capacity. In fact, having excess capacity typically results in very poor part load performance and humidity control.

Using higher design temperatures than ASHRAE recommends for your location, adding "safety factors" to the calculated load, and rounding up to the next largest unit, are all signs of oversizing air conditioners. Oversizing can cause short-cycling, and short cycling leads to poor humidity control, reduced efficiency, higher utility bills, drastic indoor temperature swings, excessive noise, and increased wear and tear on the air conditioner.

Rather than oversizing an air conditioner, wise contractors and engineers "right-size" or even slightly undersize air conditioners. Correctly sizing an air conditioner controls humidity better; promotes efficiency; reduces utility bills; extends equipment life, and maintains even, comfortable temperatures.

Low ambient applications

When equipped with a Carrier economizer, your rooftop unit can cool your space by bringing in fresh, cool outside air. In fact, when so equipped, accessory low-ambient kit may not be necessary. In low ambient conditions, unless the outdoor air is excessively humid or contaminated, economizer-based "free cooling" is the preferred less costly and energy conscious method.

In low ambient applications where outside air might not be desired (such as contaminated or excessively humid outdoor environments), your Carrier rooftop can operate to ambient temperatures down to -20°F (-29°C) using the recommended accessory Motormaster low ambient controller.

Winter start

Carrier's winter start kit extends the low ambient limit of your rooftop to 25°F (-4°C). The kit bypasses the low pressure switch, preventing nuisance tripping of the low pressure switch. Other low ambient precautions may still be prudent.

SELECTION PROCEDURE (WITH 50HC*A07 EXAMPLE)[1]

I. Determine cooling and heating loads.

Given:

Mixed Air Drybulb	80°F (27°C)
Mixed Air Wetbulb	67°F (19°C)
Ambient Drybulb	95°F (35°C)
TC_{Load}	69.0 MBH
SHC_{Load}	51.0 MBH
Vertical Supply Air	2100 CFM
External Static Pressure	0.66 in. w.g.
Electrical Characteristics	230-3-60

II. Make an initial guess at cooling tons.

Refrig. tons = TC_{Load} / 12 MBH per ton
Refrig. tons = 69.0 / 12 = 5.75 tons

In this case, start by looking at the 50HC*A07.

III. Look up the rooftop's TC and SHC.

Table 22 shows that, at the application's supply air CFM, mixed air and ambient temperatures, the 50HC*A07 supplies:
TC_{Load} = 73.6 MBH
SHC_{Load} = 53.3 MBH.

IV. Calculate the building Latent Heat Load.

$LC_{Load} = TC_{Load} - SHC_{Load}$
LC_{Load} = 69.0 MBH - 51.0 MBH = 18.0 MBH

V. Calculate RTU Latent Heat Capacity

LC = TC - SHC
LC = 73.6 MBH - 53.3 MBH = 20.3 MBH

VI. Compare RTU capacities to loads. [2,3]

Compare the rooftop's SHC and LC to the building's Sensible and Latent Heat Loads.

VII. Select factory options (FIOP)

Local code requires an economizer for any unit with TC larger than 65.0 MBH.

VIII. Calculate the total static pressure.

External static pressure	0.66 in. wg
Sum of FIOP/Accessory static	+0.05 in. wg
Total Static Pressure	0.71 in. wg

IX. Look up the Indoor Fan RPM & BHP.

Table 51 shows, at 2100 CFM & ESP= 0.71,
RPM = 680 & BHP = 0.97

X. Convert BHP (Step IX) into fan motor heat.

Fan Motor Heat = 2.546*097/.80 efficiency.
Fan Motor Heat = 1.98 MBH
Deduct this value from the gross capacity values for net capacity.

XI. Determine electrical requirements

Table 79 shows the MCA and MOCP of a 50HC*A07 (without convenience outlet) as:

MCA = 32 amps & Breaker size = 50 amps
Min. Disconnect Size: FLA = 31 & LRA = 148.

LEGEND

BHP — Break horsepower
FLA — Full load amps
LC — Latent capacity
LRA — Lock rotor amp
MBH — (1,000) BTUH
MCA — Min. circuit ampacity
MOCP — Max. over–current protection
RPM — Revolutions per minute
RTU — Rooftop unit
SHC — Sensible heat capacity
TC — Total capacity

NOTES:

1. Selection software by Carrier saves time by performing many of the steps above. Contact your Carrier sales representative for assistance.
2. Selecting a unit with a SHC slightly lower than the SHC_{Load} is often better than oversizing. Slightly lower SHC's will help control indoor humidity, and prevent temperature swings.
3. If the rooftop's capacity meets the Sensible Heat Load, but not the Latent Heat Load.
4. Indoor Fan Motor efficiency is available in Table 71. Use the decimal form in the equation eg. 80% =.8.

Table 16 – COOLING CAPACITIES 1-STAGE COOLING 3 TONS

50HC*A04				AMBIENT TEMPERATURE														
				85			95			105			115			125		
				EA (dB)			EA (dB)			EA (dB)			EA (dB)			EA (dB)		
				75	80	85	75	80	85	75	80	85	75	80	85	75	80	85
900 Cfm	EA (wB)	58	TC	32.1	32.1	36.3	30.8	30.8	34.9	29.4	29.4	33.4	28.0	28.0	31.7	26.3	26.3	29.8
			SHC	27.8	32.1	36.3	26.7	30.8	34.9	25.5	29.4	33.4	24.2	28.0	31.7	22.8	26.3	29.8
		62	TC	34.0	34.0	34.3	32.3	32.3	33.5	30.6	30.6	32.6	28.7	28.7	31.7	26.6	26.6	30.6
			SHC	25.0	29.7	34.3	24.2	28.9	33.5	23.4	28.0	32.6	22.5	27.1	31.7	21.5	26.0	30.6
		67	TC	37.3	37.3	37.3	35.5	35.5	35.5	33.6	33.6	33.6	31.5	31.5	31.5	29.2	29.2	29.2
			SHC	20.7	25.4	30.0	20.0	24.6	29.3	19.2	23.8	28.4	18.3	22.9	27.6	17.4	22.0	26.6
		72	TC	40.8	40.8	40.8	38.9	38.9	38.9	36.9	36.9	36.9	34.6	34.6	34.6	32.2	32.2	32.2
			SHC	16.3	21.0	25.7	15.6	20.3	25.0	14.8	19.5	24.1	13.9	18.6	23.3	13.0	17.7	22.3
		76	TC	–	43.9	43.9	–	41.8	41.8	–	39.6	39.6	–	37.2	37.2	–	34.6	34.6
			SHC	–	17.4	22.4	–	16.7	21.7	–	15.9	20.8	–	15.1	19.9	–	14.2	19.0
1050 Cfm	EA (wB)	58	TC	33.8	33.8	38.4	32.5	32.5	36.8	31.0	31.0	35.1	29.4	29.4	33.3	27.6	27.6	31.3
			SHC	29.3	33.8	38.4	28.1	32.5	36.8	26.9	31.0	35.1	25.5	29.4	33.3	23.9	27.6	31.3
		62	TC	35.1	35.1	37.5	33.3	33.3	36.6	31.5	31.5	35.7	29.6	29.6	34.5	27.7	27.7	32.6
			SHC	26.9	32.2	37.5	26.0	31.3	36.6	25.1	30.4	35.7	24.1	29.3	34.5	22.7	27.7	32.6
		67	TC	38.4	38.4	38.4	36.5	36.5	36.5	34.5	34.5	34.5	32.3	32.3	32.3	29.9	29.9	29.9
			SHC	22.0	27.3	32.7	21.2	26.5	31.9	20.3	25.7	31.0	19.4	24.8	30.1	18.5	23.8	29.1
		72	TC	42.0	42.0	42.0	40.0	40.0	40.0	37.8	37.8	37.8	35.5	35.5	35.5	32.9	32.9	32.9
			SHC	16.9	22.3	27.6	16.1	21.5	26.9	15.3	20.7	26.0	14.4	19.8	25.1	13.5	18.8	24.2
		76	TC	–	45.0	45.0	–	42.9	42.9	–	40.6	40.6	–	38.0	38.0	–	35.3	35.3
			SHC	–	18.1	23.8	–	17.4	23.0	–	16.6	22.2	–	15.7	21.3	–	14.8	20.3
1200 Cfm	EA (wB)	58	TC	35.3	35.3	40.0	33.9	33.9	38.4	32.3	32.3	36.6	30.6	30.6	34.7	28.7	28.7	32.5
			SHC	30.6	35.3	40.0	29.4	33.9	38.4	28.0	32.3	36.6	26.5	30.6	34.7	24.9	28.7	32.5
		62	TC	35.9	35.9	40.5	34.2	34.2	39.4	32.4	32.4	38.1	30.6	30.6	36.1	28.7	28.7	33.9
			SHC	28.6	34.5	40.5	27.7	33.6	39.4	26.6	32.4	38.1	25.2	30.6	36.1	23.6	28.7	33.9
		67	TC	39.3	39.3	39.3	37.3	37.3	37.3	35.2	35.2	35.2	32.9	32.9	32.9	30.5	30.5	31.6
			SHC	23.1	29.1	35.2	22.3	28.3	34.4	21.4	27.5	33.5	20.5	26.6	32.6	19.5	25.6	31.6
		72	TC	42.9	42.9	42.9	40.8	40.8	40.8	38.5	38.5	38.5	36.1	36.1	36.1	33.4	33.4	33.4
			SHC	17.3	23.4	29.5	16.6	22.6	28.7	15.7	21.8	27.9	14.8	20.9	27.0	13.9	19.9	26.0
		76	TC	–	45.9	45.9	–	43.7	43.7	–	41.3	41.3	–	38.7	38.7	–	35.9	35.9
			SHC	–	18.8	25.1	–	18.0	24.3	–	17.2	23.4	–	16.3	22.5	–	15.4	21.5
1350 Cfm	EA (wB)	58	TC	36.6	36.6	41.5	35.1	35.1	39.7	33.4	33.4	37.9	31.6	31.6	35.8	29.6	29.6	33.6
			SHC	31.7	36.6	41.5	30.4	35.1	39.7	28.9	33.4	37.9	27.4	31.6	35.8	25.7	29.6	33.6
		62	TC	36.7	36.7	43.2	35.1	35.1	41.3	33.4	33.4	39.4	31.6	31.6	37.3	29.6	29.6	34.9
			SHC	30.2	36.7	43.2	28.8	35.1	41.3	27.5	33.4	39.4	26.0	31.6	37.3	24.4	29.6	34.9
		67	TC	39.9	39.9	39.9	37.9	37.9	37.9	35.8	35.8	35.9	33.4	33.4	34.9	30.9	30.9	33.9
			SHC	24.2	30.9	37.6	23.4	30.1	36.8	22.5	29.2	35.9	21.6	28.3	34.9	20.6	27.2	33.9
		72	TC	43.6	43.6	43.6	41.4	41.4	41.4	39.1	39.1	39.1	36.6	36.6	36.6	33.9	33.9	33.9
			SHC	17.8	24.5	31.3	17.0	23.7	30.5	16.1	22.9	29.6	15.2	22.0	28.7	14.3	21.0	27.7
		76	TC	–	46.7	46.7	–	44.4	44.4	–	41.9	41.9	–	39.2	39.2	–	36.3	36.3
			SHC	–	19.4	26.3	–	18.6	25.5	–	17.8	24.6	–	16.9	23.7	–	15.9	22.7
1500 Cfm	EA (wB)	58	TC	37.7	37.7	42.7	36.1	36.1	40.9	34.3	34.3	38.9	32.5	32.5	36.8	30.4	30.4	34.4
			SHC	32.6	37.7	42.7	31.3	36.1	40.9	29.8	34.3	38.9	28.1	32.5	36.8	26.3	30.4	34.4
		62	TC	37.7	37.7	44.4	36.1	36.1	42.5	34.4	34.4	40.5	32.5	32.5	38.3	30.4	30.4	35.8
			SHC	31.0	37.7	44.4	29.7	36.1	42.5	28.3	34.4	40.5	26.7	32.5	38.3	25.0	30.4	35.8
		67	TC	40.5	40.5	40.5	38.4	38.4	39.1	36.2	36.2	38.2	33.8	33.8	37.2	31.2	31.2	36.1
			SHC	25.2	32.6	40.0	24.4	31.7	39.1	23.5	30.8	38.2	22.5	29.9	37.2	21.5	28.8	36.1
		72	TC	44.2	44.2	44.2	41.9	41.9	41.9	39.6	39.6	39.6	37.0	37.0	37.0	34.2	34.2	34.2
			SHC	18.2	25.6	33.0	17.4	24.8	32.2	16.5	23.9	31.3	15.6	23.0	30.4	14.7	22.0	29.4
		76	TC	–	47.2	47.2	–	44.9	44.9	–	42.3	42.3	–	39.6	39.6	–	36.7	36.7
			SHC	–	19.9	27.5	–	19.1	26.7	–	18.3	25.8	–	17.4	24.9	–	16.4	23.9

LEGEND:

– – Do not operate
Cfm – Cubic feet per minute (supply air)
EAT(db) – Entering air temperature (dry bulb)
EAT(wb) – Entering air temperature (wet bulb)
SHC – Sensible heat capacity
TC – Total capacity

50HC04 (3 TONS) – UNIT WITH HUMIDI–MIZER SYSTEM IN SUBCOOLING MODE										
Temp (F) Air Ent Condenser (Edb)		AIR ENTERING EVAPORATOR – CFM								
		900 / 0.01			1200 / 0.02			1500 / 0.04		
		Air Entering Evaporator – Ewb (F)								
		72	67	62	72	67	62	72	67	62
75	TC	44.6	40.3	36.5	47.0	43.0	39.1	48.8	44.3	40.8
	SHC	19.8	24.5	29.3	22.6	29.1	35.3	25.4	33.0	40.4
	kW	2.02	1.97	1.93	1.96	2.00	2.05	2.08	2.02	1.98
85	TC	42.1	38.1	34.4	44.6	40.5	36.9	46.1	41.9	38.6
	SHC	17.5	22.5	27.4	20.4	26.8	33.2	22.9	30.8	38.2
	kW	2.28	2.23	2.19	2.22	2.26	2.31	2.33	2.28	2.24
95	TC	39.6	35.8	32.3	41.9	38.0	34.5	43.2	39.3	36.2
	SHC	15.2	20.3	25.5	17.8	24.5	31.1	20.2	28.4	35.9
	kW	2.56	2.51	2.47	2.50	2.54	2.60	2.62	2.56	2.52
105	TC	36.8	33.2	30.0	38.9	35.3	32.0	40.2	36.5	33.6
	SHC	12.7	18.1	23.4	15.1	22.0	28.8	17.5	25.8	33.6
	kW	2.88	2.83	2.79	2.82	2.86	2.91	2.93	2.88	2.84
115	TC	33.9	30.5	27.5	35.8	32.4	29.4	37.0	33.5	30.9
	SHC	10.1	15.7	21.2	12.3	19.5	26.4	14.5	23.1	30.9
	kW	3.23	3.19	3.15	3.17	3.21	3.26	3.28	3.23	3.19
125	TC	30.8	27.7	24.9	32.5	29.3	26.5	33.5	30.3	27.9
	SHC	7.3	13.1	18.9	9.4	16.7	23.9	11.4	20.3	27.9
	kW	3.62	3.59	3.56	3.57	3.60	3.65	3.66	3.62	3.59

50HC04 (3 TONS) – UNIT WITH HUMIDI–MIZER SYSTEM IN HOT GAS REHEAT MODE										
Temp (F) Air Ent Condenser (Edb)		AIR ENTERING EVAPORATOR - Ewb (F)								
		75 Dry Bulb			75 Dry Bulb			75 Dry Bulb		
		62.5 Wet Bulb			64 Wet Bulb			65.3 Wet Bulb		
		(50% Relative)			(56% Relative)			(60% Relative)		
		Air Entering Evaporator - Cfm								
		900	1200	1500	900	1200	1500	900	1200	1500
80	TC	16.46	17.15	17.74	16.66	17.23	17.79	16.85	17.74	18.29
	SHC	5.10	6.60	8.15	3.21	4.33	5.61	1.59	2.75	3.83
	kW	1.94	2.01	2.02	2.04	2.13	2.15	2.12	2.14	2.16
75	TC	16.61	17.52	18.09	17.18	18.09	18.67	17.69	18.61	19.19
	SHC	5.24	6.96	8.48	3.71	5.15	6.45	2.40	3.59	4.69
	kW	1.98	2.00	2.01	1.99	2.01	2.02	2.00	2.02	2.03
70	TC	17.00	18.06	18.63	17.56	18.46	19.40	18.41	19.35	20.10
	SHC	5.62	7.47	9.00	4.08	5.50	7.16	3.09	4.31	5.58
	kW	1.96	1.94	1.96	1.97	2.00	1.94	1.91	1.94	1.92
60	TC	17.63	18.49	19.37	18.17	19.38	19.95	18.66	19.52	20.46
	SHC	6.21	7.89	9.71	4.66	6.39	7.68	3.31	4.45	5.90
	kW	1.93	1.96	1.92	1.95	1.92	1.94	1.97	2.00	1.96
50	TC	17.82	18.59	19.72	18.31	19.73	20.26	18.76	20.21	20.73
	SHC	6.40	7.99	10.05	4.79	6.71	7.97	3.40	5.11	6.16
	kW	1.98	2.03	1.94	2.01	1.94	1.97	2.03	1.96	1.99
40	TC	17.70	19.38	19.85	19.10	20.30	20.34	19.53	20.76	21.26
	SHC	6.30	8.74	10.17	5.54	7.26	8.05	4.13	5.64	6.67
	kW	2.07	1.95	1.99	1.93	1.91	2.02	1.96	1.94	1.97

LEGEND

Edb – Entering Dry–Bulb
Ewb – Entering Wet–Bulb
kW – Compressor Motor Power Input
Idb – Leaving Dry–Bulb
lwb – Leaving Wet–Bulb
SHC – Sensible Heat Capacity (1000 Btuh) Gross
TC – Total Capacity (1000 Btuh) Gross

NOTES:

1. Direct interpolation is permissible. Do not extrapolate.
2. The following formulas may be used:

$$t_{ldb} = t_{edb} - \frac{\text{sensible capacity (Btuh)}}{1.10 \times \text{cfm}}$$

t_{lwb} = Wet–bulb temperature corresponding to enthalpy of air leaving evaporator coil (h_{lwb})

$$h_{lwb} = h_{ewb} - \frac{\text{total capacity (Btuh)}}{4.5 \times \text{cfm}}$$

Where: h_{ewb} = Enthalpy of air entering evaporator coil

Table 18 – COOLING CAPACITIES 1-STAGE COOLING 4 TONS

50HC*A05				AMBIENT TEMPERATURE														
				85			95			105			115			125		
				EA (dB)			EA (dB)			EA (dB)			EA (dB)			EA (dB)		
				75	80	85	75	80	85	75	80	85	75	80	85	75	80	85
1200 Cfm	EA (wB)	58	TC	43.2	43.2	49.1	41.5	41.5	47.2	39.7	39.7	45.1	37.7	37.7	42.9	35.6	35.6	40.4
			SHC	37.3	43.2	49.1	35.9	41.5	47.2	34.3	39.7	45.1	32.6	37.7	42.9	30.7	35.6	40.4
		62	TC	45.9	45.9	46.0	43.7	43.7	45.0	41.3	41.3	43.8	38.8	38.8	42.6	36.0	36.0	41.2
			SHC	33.5	39.8	46.0	32.5	38.7	45.0	31.3	37.6	43.8	30.1	36.3	42.6	28.8	35.0	41.2
		67	TC	50.5	50.5	50.5	48.0	48.0	48.0	45.4	45.4	45.4	42.6	42.6	42.6	39.6	39.6	39.6
			SHC	27.9	34.1	40.4	26.8	33.1	39.4	25.7	32.0	38.2	24.5	30.8	37.1	23.2	29.5	35.8
		72	TC	55.4	55.4	55.4	52.7	52.7	52.7	49.9	49.9	49.9	46.8	46.8	46.8	43.5	43.5	43.5
			SHC	22.0	28.4	34.7	21.0	27.3	33.7	19.9	26.2	32.5	18.7	25.0	31.3	17.4	23.8	30.1
		76	TC	–	59.7	59.7	–	56.8	56.8	–	53.7	53.7	–	50.4	50.4	–	46.8	46.8
			SHC	–	23.6	30.2	–	22.6	29.2	–	21.5	28.1	–	20.3	26.8	–	19.1	25.5
1400 Cfm	EA (wB)	58	TC	45.6	45.6	51.9	43.8	43.8	49.8	41.9	41.9	47.6	39.7	39.7	45.1	37.3	37.3	42.4
			SHC	39.4	45.6	51.9	37.9	43.8	49.8	36.2	41.9	47.6	34.3	39.7	45.1	32.3	37.3	42.4
		62	TC	47.4	47.4	50.5	45.1	45.1	49.3	42.6	42.6	48.0	40.0	40.0	46.5	37.4	37.4	44.2
			SHC	36.0	43.2	50.5	34.9	42.1	49.3	33.7	40.9	48.0	32.4	39.5	46.5	30.6	37.4	44.2
		67	TC	52.1	52.1	52.1	49.5	49.5	49.5	46.7	46.7	46.7	43.7	43.7	43.7	40.5	40.5	40.5
			SHC	29.5	36.8	44.0	28.4	35.7	42.9	27.3	34.5	41.8	26.0	33.3	40.5	24.7	32.0	39.2
		72	TC	57.1	57.1	57.1	54.3	54.3	54.3	51.2	51.2	51.2	48.0	48.0	48.0	44.5	44.5	44.5
			SHC	22.8	30.1	37.4	21.7	29.0	36.3	20.5	27.8	35.1	19.3	26.6	33.9	18.0	25.3	32.6
		76	TC	–	61.4	61.4	–	58.3	58.3	–	55.1	55.1	–	51.6	51.6	–	47.8	47.8
			SHC	–	24.6	32.2	–	23.5	31.1	–	22.4	29.9	–	21.2	28.7	–	19.9	27.4
1600 Cfm	EA (wB)	58	TC	47.7	47.7	54.2	45.8	45.8	52.0	43.7	43.7	49.6	41.3	41.3	47.0	38.8	38.8	44.1
			SHC	41.2	47.7	54.2	39.5	45.8	52.0	37.7	43.7	49.6	35.7	41.3	47.0	33.5	38.8	44.1
		62	TC	48.7	48.7	54.5	46.3	46.3	53.2	43.7	43.7	51.7	41.4	41.4	48.9	38.8	38.8	45.9
			SHC	38.3	46.4	54.5	37.1	45.2	53.2	35.8	43.7	51.7	33.9	41.4	48.9	31.8	38.8	45.9
		67	TC	53.3	53.3	53.3	50.6	50.6	50.6	47.7	47.7	47.7	44.6	44.6	44.6	41.2	41.2	42.6
			SHC	31.0	39.2	47.5	29.9	38.1	46.3	28.7	37.0	45.2	27.5	35.7	43.9	26.2	34.4	42.6
		72	TC	58.4	58.4	58.4	55.4	55.4	55.4	52.3	52.3	52.3	48.9	48.9	48.9	45.2	45.2	45.2
			SHC	23.4	31.7	39.9	22.3	30.6	38.8	21.1	29.4	37.6	19.9	28.2	36.4	18.6	26.8	35.1
		76	TC	–	62.7	62.7	–	59.5	59.5	–	56.1	56.1	–	52.5	52.5	–	48.6	48.6
			SHC	–	25.5	34.0	–	24.4	32.9	–	23.2	31.7	–	22.0	30.4	–	20.7	29.1
1800 Cfm	EA (wB)	58	TC	49.5	49.5	56.2	47.4	47.4	53.9	45.2	45.2	51.3	42.7	42.7	48.5	40.1	40.1	45.5
			SHC	42.8	49.5	56.2	41.0	47.4	53.9	39.0	45.2	51.3	36.9	42.7	48.5	34.6	40.1	45.5
		62	TC	49.8	49.8	58.1	47.5	47.5	56.1	45.2	45.2	53.4	42.8	42.8	50.5	40.1	40.1	47.4
			SHC	40.4	49.2	58.1	38.8	47.5	56.1	37.0	45.2	53.4	35.0	42.8	50.5	32.8	40.1	47.4
		67	TC	54.3	54.3	54.3	51.5	51.5	51.5	48.5	48.5	48.5	45.3	45.3	47.1	41.8	41.8	45.7
			SHC	32.5	41.7	50.8	31.4	40.5	49.7	30.2	39.3	48.5	28.9	38.0	47.1	27.5	36.6	45.7
		72	TC	59.4	59.4	59.4	56.3	56.3	56.3	53.1	53.1	53.1	49.6	49.6	49.6	45.8	45.8	45.8
			SHC	24.0	33.2	42.4	22.9	32.1	41.3	21.7	30.9	40.1	20.4	29.6	38.8	19.1	28.3	37.5
		76	TC	–	63.8	63.8	–	60.5	60.5	–	57.0	57.0	–	53.2	53.2	–	49.2	49.2
			SHC	–	26.3	35.8	–	25.2	34.6	–	24.0	33.4	–	22.8	32.1	–	21.5	30.8
2000 Cfm	EA (wB)	58	TC	51.0	51.0	58.0	48.8	48.8	55.5	46.5	46.5	52.8	43.9	43.9	49.9	41.1	41.1	46.7
			SHC	44.1	51.0	58.0	42.2	48.8	55.5	40.2	46.5	52.8	37.9	43.9	49.9	35.5	41.1	46.7
		62	TC	51.1	51.1	60.4	48.9	48.9	57.8	46.5	46.5	55.0	44.0	44.0	51.9	41.1	41.1	48.6
			SHC	41.8	51.1	60.4	40.0	48.9	57.8	38.1	46.5	55.0	36.0	44.0	51.9	33.7	41.1	48.6
		67	TC	55.1	55.1	55.1	52.1	52.1	52.9	49.1	49.1	51.6	45.8	45.8	50.2	42.3	42.3	48.7
			SHC	33.9	44.0	54.1	32.7	42.8	52.9	31.5	41.5	51.6	30.2	40.2	50.2	28.8	38.8	48.7
		72	TC	60.3	60.3	60.3	57.1	57.1	57.1	53.7	53.7	53.7	50.1	50.1	50.1	46.3	46.3	46.3
			SHC	24.5	34.7	44.8	23.4	33.5	43.6	22.2	32.3	42.4	21.0	31.1	41.2	19.6	29.7	39.8
		76	TC	–	64.6	64.6	–	61.2	61.2	–	57.6	57.6	–	53.8	53.8	–	49.7	49.7
			SHC	–	27.1	37.5	–	26.0	36.3	–	24.8	35.1	–	23.5	33.8	–	22.2	32.4

LEGEND:

– – Do not operate
Cfm – Cubic feet per minute (supply air)
EAT(db) – Entering air temperature (dry bulb)
EAT(wb) – Entering air temperature (wet bulb)
SHC – Sensible heat capacity
TC – Total capacity

50HC05 (4 TONS) – UNIT WITH HUMIDI–MIZER IN SUBCOOLING MODE										
Temp (F) Air Ent Condenser (Edb)		AIR ENTERING EVAPORATOR – CFM								
		1200 / 0.04			1600 / 0.07			2000 / 0.10		
		Air Entering Evaporator – Ewb (F)								
		72	67	62	72	67	62	72	67	62
75	TC	57.8	52.3	47.2	61.5	55.6	50.6	63.7	57.9	0.0
	SHC	24.2	30.5	36.8	27.9	35.9	44.0	31.2	40.9	0.0
	kW	2.50	2.47	2.44	2.46	2.48	2.51	2.53	2.50	0.00
85	TC	54.1	48.9	44.1	57.1	52.0	47.3	59.6	54.0	49.5
	SHC	20.7	27.3	33.9	23.9	32.6	41.0	27.3	37.3	47.1
	kW	2.81	2.78	2.76	2.78	2.80	2.82	2.84	2.81	2.79
95	TC	50.1	45.3	40.8	53.3	48.2	43.7	55.2	50.1	45.8
	SHC	17.0	24.0	30.9	20.4	29.1	37.7	23.3	33.6	43.6
	kW	3.16	3.14	3.12	3.13	3.15	3.18	3.19	3.16	3.14
105	TC	45.7	41.1	37.2	48.6	43.8	39.8	50.5	45.5	41.8
	SHC	12.9	20.1	27.6	16.0	25.0	34.1	19.0	29.4	39.9
	kW	3.56	3.54	3.52	3.54	3.55	3.58	3.59	3.56	3.55
115	TC	41.1	37.0	33.2	43.5	39.2	35.5	45.4	41.1	37.5
	SHC	8.7	16.4	23.9	11.3	20.7	30.1	14.3	25.4	35.8
	kW	4.02	4.01	4.00	4.00	4.01	4.03	4.04	4.03	4.01
125	TC	36.3	32.5	29.0	38.6	34.7	31.2	40.2	36.1	32.9
	SHC	4.3	12.2	20.1	6.8	16.6	26.2	9.4	20.8	31.5
	kW	4.54	4.53	4.53	4.53	4.54	4.54	4.55	4.54	4.54

50HC05 (4 TONS) – UNIT WITH HUMIDI–MIZER SYSTEM IN HOT GAS REHEAT MODE										
Temp (F) Air Ent Condenser (Edb)		AIR ENTERING EVAPORATOR – Ewb (F)								
		75 Dry Bulb			75 Dry Bulb			75 Dry Bulb		
		62.5 Wet Bulb			64 Wet Bulb			65.3 Wet Bulb		
		(50% Relative)			(56% Relative)			(60% Relative)		
		Air Entering Evaporator – Cfm								
		1200	1600	2000	1200	1600	2000	1200	1600	2000
80	TC	18.64	19.95	20.78	19.35	20.71	21.51	20.00	21.37	22.33
	SHC	0.78	4.36	8.24	–1.95	1.01	4.29	–4.33	–1.91	0.99
	kW	2.66	2.68	2.69	2.67	2.69	2.69	2.68	2.69	2.68
75	TC	19.37	21.21	22.15	20.47	21.97	22.92	21.15	22.78	23.65
	SHC	1.48	5.52	9.49	–0.91	2.18	5.57	–3.26	–0.61	2.20
	kW	2.62	2.54	2.54	2.56	2.55	2.55	2.56	2.55	2.56
70	TC	19.92	21.63	22.64	20.77	22.52	23.61	21.70	23.39	24.26
	SHC	2.01	5.94	9.98	–0.61	2.70	6.23	–2.72	–0.02	2.78
	kW	2.60	2.56	2.54	2.58	2.54	2.53	2.54	2.52	2.54
60	TC	20.11	21.27	22.23	20.75	23.15	23.43	22.49	23.78	24.55
	SHC	2.24	5.70	9.70	–0.57	3.35	6.15	–1.95	0.40	3.13
	kW	2.69	2.74	2.73	2.72	2.58	2.68	2.56	2.60	2.63
50	TC	21.56	22.70	23.37	22.18	23.33	24.01	22.75	23.90	25.40
	SHC	3.61	7.03	10.76	0.78	3.57	6.73	–1.67	0.57	3.96
	kW	2.57	2.63	2.66	2.60	2.66	2.69	2.63	2.69	2.62
40	TC	21.67	23.23	24.04	22.76	23.82	25.57	23.28	24.34	26.13
	SHC	3.74	7.56	9.89	1.35	4.06	8.17	–1.15	1.01	4.67
	kW	2.64	2.64	2.69	2.61	2.67	2.58	2.64	2.70	2.61

LEGEND

Edb – Entering Dry–Bulb
Ewb – Entering Wet–Bulb
kW – Compressor Motor Power Input
Idb – Leaving Dry–Bulb
Iwb – Leaving Wet–Bulb
SHC – Sensible Heat Capacity (1000 Btuh) Gross
TC – Total Capacity (1000 Btuh) Gross

NOTES:

1. Direct interpolation is permissible. Do not extrapolate.
2. The following formulas may be used:

$$t_{ldb} = t_{edb} - \frac{\text{sensible capacity (Btuh)}}{1.10 \times \text{cfm}}$$

t_{lwb} = Wet–bulb temperature corresponding to enthalpy of air leaving evaporator coil (h_{lwb})

$$h_{lwb} = h_{ewb} - \frac{\text{total capacity (Btuh)}}{4.5 \times \text{cfm}}$$

Where: h_{ewb} = Enthalpy of air entering evaporator coil

Table 20 – COOLING CAPACITIES 1-STAGE COOLING 5 TONS

50HC*A06				AMBIENT TEMPERATURE														
				85			95			105			115			125		
				EA (dB)			EA (dB)			EA (dB)			EA (dB)			EA (dB)		
				75	80	85	75	80	85	75	80	85	75	80	85	75	80	85
1500 Cfm	EA (wB)	58	TC	53.4	53.4	60.6	51.3	51.3	58.2	49.0	49.0	55.6	46.5	46.5	52.7	43.7	43.7	49.5
			SHC	46.3	53.4	60.6	44.5	51.3	58.2	42.5	49.0	55.6	40.3	46.5	52.7	37.9	43.7	49.5
		62	TC	55.6	55.6	58.2	52.9	52.9	56.9	50.0	50.0	55.5	46.9	46.9	53.9	43.8	43.8	51.6
			SHC	42.0	50.1	58.2	40.7	48.8	56.9	39.4	47.4	55.5	37.9	45.9	53.9	36.0	43.8	51.6
		67	TC	60.8	60.8	60.8	57.8	57.8	57.8	54.6	54.6	54.6	51.1	51.1	51.1	47.4	47.4	47.4
			SHC	34.4	42.6	50.7	33.2	41.3	49.4	31.8	39.9	48.1	30.4	38.5	46.6	28.9	37.0	45.1
		72	TC	66.6	66.6	66.6	63.2	63.2	63.2	59.7	59.7	59.7	55.9	55.9	55.9	51.8	51.8	51.8
			SHC	26.7	34.8	43.0	25.4	33.6	41.7	24.1	32.2	40.4	22.6	30.8	38.9	21.1	29.3	37.4
		76	TC	–	71.4	71.4	–	67.9	67.9	–	64.0	64.0	–	59.9	59.9	–	55.5	55.5
			SHC	–	28.5	36.7	–	27.2	35.5	–	25.9	34.2	–	24.5	32.7	–	23.0	31.3
1750 Cfm	EA (wB)	58	TC	56.3	56.3	63.8	54.0	54.0	61.2	51.5	51.5	58.3	48.7	48.7	55.2	45.7	45.7	51.8
			SHC	48.8	56.3	63.8	46.8	54.0	61.2	44.6	51.5	58.3	42.2	48.7	55.2	39.6	45.7	51.8
		62	TC	57.3	57.3	64.0	54.5	54.5	62.5	51.6	51.6	60.7	48.8	48.8	57.5	45.8	45.8	53.9
			SHC	45.3	54.7	64.0	44.0	53.3	62.5	42.4	51.6	60.7	40.1	48.8	57.5	37.6	45.8	53.9
		67	TC	62.5	62.5	62.5	59.3	59.3	59.3	55.9	55.9	55.9	52.3	52.3	52.3	48.3	48.3	49.7
			SHC	36.6	46.0	55.4	35.3	44.7	54.1	33.9	43.3	52.7	32.4	41.8	51.3	30.9	40.3	49.7
		72	TC	68.3	68.3	68.3	64.8	64.8	64.8	61.0	61.0	61.0	57.0	57.0	57.0	52.7	52.7	52.7
			SHC	27.5	37.0	46.5	26.2	35.7	45.2	24.9	34.4	43.8	23.4	32.9	42.4	21.9	31.4	40.8
		76	TC	–	73.2	73.2	–	69.4	69.4	–	65.4	65.4	–	61.1	61.1	–	56.5	56.5
			SHC	–	29.7	39.3	–	28.4	38.0	–	27.1	36.7	–	25.6	35.2	–	24.1	33.7
2000 Cfm	EA (wB)	58	TC	58.7	58.7	66.5	56.2	56.2	63.7	53.5	53.5	60.6	50.6	50.6	57.3	47.3	47.3	53.7
			SHC	50.9	58.7	66.5	48.7	56.2	63.7	46.4	53.5	60.6	43.8	50.6	57.3	41.0	47.3	53.7
		62	TC	58.8	58.8	69.2	56.3	56.3	66.3	53.6	53.6	63.1	50.6	50.6	59.6	47.4	47.4	55.8
			SHC	48.3	58.8	69.2	46.3	56.3	66.3	44.0	53.6	63.1	41.6	50.6	59.6	39.0	47.4	55.8
		67	TC	63.8	63.8	63.8	60.4	60.4	60.4	56.9	56.9	57.3	53.1	53.1	55.8	49.1	49.1	54.1
			SHC	38.6	49.3	60.1	37.3	48.0	58.7	35.9	46.6	57.3	34.4	45.1	55.8	32.8	43.4	54.1
		72	TC	69.6	69.6	69.6	65.9	65.9	65.9	62.1	62.1	62.1	57.9	57.9	57.9	53.5	53.5	53.5
			SHC	28.4	39.1	49.9	27.0	37.8	48.6	25.7	36.4	47.2	24.2	35.0	45.7	22.6	33.4	44.2
		76	TC	–	74.5	74.5	–	70.6	70.6	–	66.5	66.5	–	62.0	62.0	–	–	–
			SHC	–	30.8	41.8	–	29.5	40.4	–	28.2	39.0	–	26.7	37.6	–	–	–
2250 Cfm	EA (wB)	58	TC	60.7	60.7	68.8	58.1	58.1	65.8	55.2	55.2	62.6	52.1	52.1	59.1	48.7	48.7	55.2
			SHC	52.6	60.7	68.8	50.3	58.1	65.8	47.9	55.2	62.6	45.2	52.1	59.1	42.2	48.7	55.2
		62	TC	60.8	60.8	71.6	58.1	58.1	68.5	55.3	55.3	65.1	52.2	52.2	61.4	48.7	48.7	57.4
			SHC	50.0	60.8	71.6	47.8	58.1	68.5	45.4	55.3	65.1	42.9	52.2	61.4	40.1	48.7	57.4
		67	TC	64.7	64.7	64.7	61.3	61.3	63.2	57.7	57.7	61.7	53.8	53.8	60.1	49.7	49.7	58.3
			SHC	40.6	52.6	64.5	39.2	51.2	63.2	37.8	49.7	61.7	36.2	48.2	60.1	34.6	46.5	58.3
		72	TC	70.6	70.6	70.6	66.8	66.8	66.8	62.8	62.8	62.8	58.6	58.6	58.6	54.0	54.0	54.0
			SHC	29.1	41.2	53.3	27.8	39.9	51.9	26.4	38.4	50.5	24.9	37.0	49.0	23.3	35.4	47.4
		76	TC	–	75.6	75.6	–	71.6	71.6	–	67.3	67.3	–	–	–	–	–	–
			SHC	–	31.9	44.1	–	30.6	42.8	–	29.2	41.4	–	–	–	–	–	–
2500 Cfm	EA (wB)	58	TC	62.5	62.5	70.8	59.7	59.7	67.6	56.7	56.7	64.2	53.4	53.4	60.5	49.9	49.9	56.5
			SHC	54.1	62.5	70.8	51.7	59.7	67.6	49.1	56.7	64.2	46.3	53.4	60.5	43.2	49.9	56.5
		62	TC	62.5	62.5	73.6	59.7	59.7	70.3	56.7	56.7	66.8	53.5	53.5	63.0	49.9	49.9	58.8
			SHC	51.4	62.5	73.6	49.1	59.7	70.3	46.6	56.7	66.8	43.9	53.5	63.0	41.0	49.9	58.8
		67	TC	65.5	65.5	68.9	62.0	62.0	67.4	58.3	58.3	65.9	54.4	54.4	64.2	50.2	50.2	62.2
			SHC	42.5	55.7	68.9	41.1	54.3	67.4	39.6	52.7	65.9	38.0	51.1	64.2	36.3	49.2	62.2
		72	TC	71.4	71.4	71.4	67.5	67.5	67.5	63.4	63.4	63.4	59.1	59.1	59.1	54.4	54.4	54.4
			SHC	29.9	43.2	56.5	28.5	41.8	55.2	27.1	40.4	53.7	25.6	38.9	52.2	24.0	37.3	50.6
		76	TC	–	76.4	76.4	–	72.3	72.3	–	–	–	–	–	–	–	–	–
			SHC	–	33.0	46.4	–	31.6	45.1	–	–	–	–	–	–	–	–	–

LEGEND:

– – Do not operate
Cfm – Cubic feet per minute (supply air)
EAT(db) – Entering air temperature (dry bulb)
EAT(wb) – Entering air temperature (wet bulb)
SHC – Sensible heat capacity
TC – Total capacity

50HC06 (5 TONS) – UNIT WITH HUMIDI–MIZER IN SUBCOOLING MODE										
Temp (F) Air Ent Condenser (Edb)		AIR ENTERING EVAPORATOR – CFM								
		1500 / 0.01			2000 / 0.02			2500 / 0.03		
		Air Entering Evaporator – Ewb (F)								
		72	67	62	72	67	62	72	67	62
75	TC	66.9	60.3	54.8	71.0	64.4	58.6	73.5	66.9	61.6
	SHC	25.8	34.1	43.0	30.5	41.7	52.6	35.0	48.6	61.2
	kW	3.11	3.06	3.03	3.05	3.09	3.16	3.16	3.11	3.07
85	TC	62.4	56.5	51.2	66.3	60.1	54.7	68.2	62.3	57.5
	SHC	21.5	30.6	39.6	26.1	37.6	49.0	29.9	44.2	57.2
	kW	3.47	3.43	3.39	3.42	3.46	3.51	3.52	3.48	3.44
95	TC	57.8	52.3	47.3	61.3	55.6	50.6	63.5	57.7	53.2
	SHC	17.2	26.6	35.9	21.4	33.3	45.1	25.6	39.9	53.2
	kW	3.89	3.85	3.80	3.83	3.88	3.93	3.95	3.90	3.86
105	TC	52.8	47.5	42.9	55.4	50.0	45.3	58.0	52.2	47.9
	SHC	12.5	22.1	31.7	15.8	28.1	40.1	20.4	34.7	47.9
	kW	4.36	4.31	4.26	4.29	4.33	4.38	4.42	4.36	4.32
115	TC	47.4	42.8	38.6	50.1	45.2	41.1	51.8	47.1	43.4
	SHC	7.4	17.7	27.8	11.0	23.6	36.1	14.7	30.0	43.4
	kW	4.88	4.83	4.78	4.81	4.86	4.91	4.93	4.88	4.84
125	TC	41.6	37.5	33.8	44.0	39.7	35.8	45.8	41.3	38.0
	SHC	2.1	12.8	23.3	5.3	18.6	31.2	9.1	24.7	38.0
	kW	5.44	5.39	5.35	5.37	5.42	5.47	5.49	5.44	5.40

50HC06 (5 TONS) – UNIT WITH HUMIDI–MIZER SYSTEM IN HOT GAS REHEAT MODE										
Temp (F) Air Ent Condenser (Edb)		AIR ENTERING EVAPORATOR – Ewb (F)								
		75 Dry Bulb			75 Dry Bulb			75 Dry Bulb		
		62.5 Wet Bulb			64 Wet Bulb			65.3 Wet Bulb		
		(50% Relative)			(56% Relative)			(60% Relative)		
		Air Entering Evaporator – Cfm								
		1500	2000	2500	1500	2000	2500	1500	2000	2500
80	TC	25.29	27.61	28.72	26.81	28.62	29.71	27.68	29.53	30.63
	SHC	5.06	10.68	15.86	2.37	6.73	11.22	–0.40	3.30	7.17
	kW	3.23	3.12	3.13	3.12	3.13	3.14	3.12	3.14	3.15
75	TC	26.69	28.45	29.73	27.65	29.64	30.73	28.53	30.55	31.65
	SHC	6.39	11.52	16.85	3.20	7.72	12.20	0.43	4.29	8.16
	kW	3.08	3.11	3.09	3.10	3.09	3.11	3.11	3.10	3.12
70	TC	27.04	29.08	30.15	28.29	30.04	31.09	29.13	30.91	31.97
	SHC	6.76	12.14	17.28	3.82	8.14	12.60	1.02	4.67	8.51
	kW	3.15	3.12	3.15	3.11	3.14	3.17	3.13	3.16	3.18
60	TC	27.99	29.57	31.33	28.86	30.46	32.25	29.63	32.44	33.81
	SHC	7.70	12.66	18.45	4.41	8.60	13.74	1.54	6.16	10.28
	kW	3.17	3.23	3.15	3.21	3.26	3.18	3.23	3.12	3.10
50	TC	30.09	31.66	32.64	30.93	32.57	33.53	31.73	33.38	34.35
	SHC	9.72	14.66	19.72	6.40	10.61	14.99	3.56	7.10	10.85
	kW	3.01	3.07	3.11	3.04	3.10	3.15	3.07	3.14	3.18
40	TC	28.39	30.78	32.67	31.13	32.60	34.40	31.86	33.33	36.07
	SHC	8.17	13.89	19.80	6.63	10.69	15.85	3.72	7.10	12.51
	kW	3.39	3.32	3.24	3.14	3.23	3.15	3.18	3.27	3.08

LEGEND

Edb – Entering Dry–Bulb
Ewb – Entering Wet–Bulb
kW – Compressor Motor Power Input
ldb – Leaving Dry–Bulb
lwb – Leaving Wet–Bulb
SHC – Sensible Heat Capacity (1000 Btuh) Gross
TC – Total Capacity (1000 Btuh) Gross

NOTES:

1. Direct interpolation is permissible. Do not extrapolate.
2. The following formulas may be used:

$$t_{ldb} = t_{edb} - \frac{\text{sensible capacity (Btuh)}}{1.10 \times \text{cfm}}$$

t_{lwb} = Wet–bulb temperature corresponding to enthalpy of air leaving evaporator coil (h_{lwb})

$$h_{lwb} = h_{ewb} - \frac{\text{total capacity (Btuh)}}{4.5 \times \text{cfm}}$$

Where: h_{ewb} = Enthalpy of air entering evaporator coil

Table 22 – COOLING CAPACITIES 1-STAGE COOLING 6 TONS

50HC*A07				AMBIENT TEMPERATURE														
				85			95			105			115			125		
				EA (dB)			EA (dB)			EA (dB)			EA (dB)			EA (dB)		
				75	80	85	75	80	85	75	80	85	75	80	85	75	80	85
1800 Cfm	EA (wB)	58	TC	64.1	64.1	72.5	61.8	61.8	69.9	59.2	59.2	67	56.3	56.3	63.7	53.2	53.2	60.2
			SHC	55.7	64.1	72.5	53.7	61.8	69.9	51.4	59.2	67	48.9	56.3	63.7	46.2	53.2	60.2
		62	TC	67.9	67.9	68.5	64.9	64.9	67	61.5	61.5	65.3	57.9	57.9	63.5	54	54	61.4
			SHC	50.2	59.4	68.5	48.8	57.9	67	47.1	56.2	65.3	45.4	54.4	63.5	43.4	52.4	61.4
		67	TC	74.8	74.8	74.8	71.5	71.5	71.5	67.8	67.8	67.8	63.8	63.8	63.8	59.5	59.5	59.5
			SHC	41.8	50.9	60.1	40.3	49.5	58.7	38.8	47.9	57.1	37.1	46.2	55.4	35.3	44.4	53.6
		72	TC	82.2	82.2	82.2	78.7	78.7	78.7	74.7	74.7	74.7	70.4	70.4	70.4	65.6	65.6	65.6
			SHC	33	42.3	51.6	31.6	40.9	50.2	30.1	39.3	48.6	28.4	37.7	46.9	26.7	35.9	45.1
		76	TC	–	88.7	88.7	–	84.8	84.8	–	80.6	80.6	–	76	76	–	70.9	70.9
			SHC	–	35.3	45.2	–	33.9	43.7	–	32.4	42	–	30.7	40.3	–	28.9	38.5
2100 Cfm	EA (wB)	58	TC	67.6	67.6	76.5	65.1	65.1	73.7	62.3	62.3	70.5	59.3	59.3	67.1	55.9	55.9	63.2
			SHC	58.7	67.6	76.5	56.6	65.1	73.7	54.1	62.3	70.5	51.5	59.3	67.1	48.5	55.9	63.2
		62	TC	70.1	70.1	74.9	67	67	73.2	63.5	63.5	71.3	59.7	59.7	69.1	56	56	65.8
			SHC	53.9	64.4	74.9	52.4	62.8	73.2	50.6	61	71.3	48.7	58.9	69.1	46.2	56	65.8
		67	TC	77.1	77.1	77.1	73.6	73.6	73.6	69.7	69.7	69.7	65.5	65.5	65.5	60.9	60.9	60.9
			SHC	44.2	54.8	65.3	42.7	53.3	63.9	41.2	51.7	62.3	39.4	50	60.5	37.6	48.1	58.6
		72	TC	84.7	84.7	84.7	80.9	80.9	80.9	76.8	76.8	76.8	72.2	72.2	72.2	67.2	67.2	67.2
			SHC	34.2	44.8	55.5	32.7	43.4	54	31.1	41.8	52.4	29.5	40.1	50.7	27.6	38.2	48.8
		76	TC	–	91.3	91.3	–	87.2	87.2	–	82.7	82.7	–	77.8	77.8	–	72.5	72.5
			SHC	–	36.7	47.8	–	35.3	46.3	–	33.7	44.7	–	32	43	–	30.2	41.1
2400 Cfm	EA (wB)	58	TC	70.6	70.6	79.9	68	68	76.9	65	65	73.5	61.7	61.7	69.8	58.1	58.1	65.8
			SHC	61.3	70.6	79.9	59	68	76.9	56.4	65	73.5	53.6	61.7	69.8	50.5	58.1	65.8
		62	TC	72	72	80.6	68.7	68.7	78.7	65.2	65.2	76.6	61.8	61.8	72.6	58.2	58.2	68.4
			SHC	57.3	69	80.6	55.6	67.2	78.7	53.7	65.2	76.6	50.9	61.8	72.6	48	58.2	68.4
		67	TC	78.9	78.9	78.9	75.2	75.2	75.2	71.2	71.2	71.2	66.8	66.8	66.8	62	62	63.4
			SHC	46.5	58.4	70.3	45	56.9	68.8	43.4	55.3	67.2	41.6	53.5	65.4	39.7	51.6	63.4
		72	TC	86.6	86.6	86.6	82.7	82.7	82.7	78.3	78.3	78.3	73.6	73.6	73.6	68.4	68.4	68.4
			SHC	35.2	47.2	59.2	33.7	45.7	57.7	32.1	44.1	56	30.4	42.3	54.3	28.5	40.5	52.4
		76	TC	–	93.3	93.3	–	89	89	–	84.4	84.4	–	79.3	79.3	–	73.7	73.7
			SHC	–	38	50.4	–	36.6	48.9	–	35	47.3	–	33.3	45.5	–	31.4	43.6
2700 Cfm	EA (wB)	58	TC	73.2	73.2	82.8	70.4	70.4	79.6	67.3	67.3	76.1	63.8	63.8	72.2	60	60	67.9
			SHC	63.6	73.2	82.8	61.1	70.4	79.6	58.4	67.3	76.1	55.4	63.8	72.2	52.1	60	67.9
		62	TC	73.7	73.7	85.5	70.5	70.5	82.8	67.3	67.3	79.1	63.9	63.9	75.1	60.1	60.1	70.6
			SHC	60.2	72.9	85.5	58.1	70.5	82.8	55.5	67.3	79.1	52.7	63.9	75.1	49.5	60.1	70.6
		67	TC	80.3	80.3	80.3	76.5	76.5	76.5	72.4	72.4	72.4	67.8	67.8	70	62.9	62.9	67.9
			SHC	48.7	61.9	75.1	47.1	60.4	73.6	45.5	58.7	71.9	43.7	56.8	70	41.7	54.8	67.9
		72	TC	88.2	88.2	88.2	84	84	84	79.6	79.6	79.6	74.6	74.6	74.6	69.3	69.3	69.3
			SHC	36.1	49.4	62.7	34.6	47.9	61.2	33	46.2	59.5	31.2	44.5	57.7	29.3	42.6	55.8
		76	TC	–	94.9	94.9	–	90.4	90.4	–	85.6	85.6	–	80.4	80.4	–	74.7	74.7
			SHC	–	39.2	52.9	–	37.7	51.4	–	36.1	49.7	–	34.4	47.9	–	32.5	46
3000 Cfm	EA (wB)	58	TC	75.4	75.4	85.3	72.5	72.5	82	69.2	69.2	78.3	65.6	65.6	74.2	61.7	61.7	69.8
			SHC	65.5	75.4	85.3	62.9	72.5	82	60.1	69.2	78.3	57	65.6	74.2	53.5	61.7	69.8
		62	TC	75.5	75.5	88.7	72.5	72.5	85.3	69.3	69.3	81.4	65.7	65.7	77.2	61.7	61.7	72.5
			SHC	62.2	75.5	88.7	59.8	72.5	85.3	57.1	69.3	81.4	54.1	65.7	77.2	50.9	61.7	72.5
		67	TC	81.4	81.4	81.4	77.5	77.5	78.1	73.3	73.3	76.4	68.7	68.7	74.4	63.7	63.7	72.2
			SHC	50.7	65.2	79.7	49.2	63.7	78.1	47.5	61.9	76.4	45.6	60	74.4	43.6	57.9	72.2
		72	TC	89.4	89.4	89.4	85.2	85.2	85.2	80.5	80.5	80.5	75.5	75.5	75.5	70.1	70.1	70.1
			SHC	36.9	51.5	66.1	35.4	50	64.6	33.8	48.3	62.9	32	46.5	61.1	30.1	44.6	59.1
		76	TC	–	96.1	96.1	–	91.6	91.6	–	86.7	86.7	–	81.3	81.3	–	75.5	75.5
			SHC	–	40.4	55.3	–	38.9	53.8	–	37.2	52.1	–	35.5	50.3	–	33.6	48.3

LEGEND:

– – Do not operate
Cfm – Cubic feet per minute (supply air)
EAT(db) – Entering air temperature (dry bulb)
EAT(wb) – Entering air temperature (wet bulb)
SHC – Sensible heat capacity
TC – Total capacity

50HC07 (6 TONS) – UNIT WITH HUMIDI–MIZER SYSTEM IN SUBCOOLING MODE										
Temp (F) Air Ent Condenser (Edb)		AIR ENTERING EVAPORATOR – CFM								
		1800 / 0.06			2400 / 0.08			3000 / 0.10		
		Air Entering Evaporator – Ewb (F)								
		72	67	62	72	67	62	72	67	62
75	TC	85.7	77.4	70.0	91.1	82.6	74.9	94.5	85.7	78.4
	SHC	38.2	47.1	56.1	43.9	55.6	67.1	49.0	63.1	76.4
	kW	4.05	4.01	3.97	4.00	4.04	4.08	4.09	4.05	4.02
85	TC	80.9	73.1	66.0	85.9	77.9	70.6	89.2	80.9	73.9
	SHC	33.5	42.9	52.3	38.8	51.1	63.0	43.9	58.6	72.1
	kW	4.46	4.43	4.39	4.42	4.45	4.48	4.51	4.47	4.43
95	TC	75.7	68.4	61.7	80.6	72.9	66.0	83.6	75.7	69.1
	SHC	28.7	38.5	48.3	33.8	46.4	58.7	38.6	53.7	67.6
	kW	4.92	4.89	4.86	4.88	4.91	4.95	4.96	4.92	4.90
105	TC	70.2	63.3	57.0	74.7	67.5	61.1	77.5	70.1	64.0
	SHC	23.6	33.9	44.1	28.4	41.4	54.2	32.9	48.6	62.7
	kW	5.43	5.40	5.37	5.39	5.42	5.45	5.47	5.43	5.41
115	TC	64.3	57.8	52.0	68.4	61.7	55.7	71.0	64.1	58.3
	SHC	18.2	28.9	39.6	22.7	36.2	49.4	27.0	43.1	58.2
	kW	5.99	5.96	5.93	5.95	5.98	6.01	6.02	5.99	5.97
125	TC	57.9	52.0	46.6	61.6	55.4	49.9	64.0	57.5	52.4
	SHC	12.4	23.8	34.9	16.6	30.7	44.3	20.7	37.3	52.4
	kW	6.59	6.57	6.55	6.56	6.59	6.61	6.62	6.60	6.58

50HC07 (6 TONS) – UNIT WITH HUMIDI–MIZER SYSTEM IN HOT GAS REHEAT MODE										
Temp (F) Air Ent Condenser (Edb)		AIR ENTERING EVAPORATOR – Ewb (F)								
		75 Dry Bulb			75 Dry Bulb			75 Dry Bulb		
		62.5 Wet Bulb			64 Wet Bulb			65.3 Wet Bulb		
		(50% Relative)			(56% Relative)			(60% Relative)		
		Air Entering Evaporator – Cfm								
		1800	2400	3000	1800	2400	3000	1800	2400	3000
80	TC	24.17	25.88	26.92	25.35	27.08	28.15	26.39	28.18	29.25
	SHC	–1.44	2.99	7.86	–5.08	–1.55	2.50	–8.25	–5.47	–2.14
	kW	4.15	4.16	4.17	4.17	4.18	4.18	4.18	4.19	4.20
75	TC	26.03	27.87	28.95	27.27	29.11	30.21	28.36	30.24	31.35
	SHC	0.43	4.97	9.86	–3.12	0.49	4.56	–6.19	–3.36	–0.03
	kW	3.96	3.97	3.98	3.98	3.99	4.00	4.00	4.01	4.01
70	TC	26.50	28.76	30.07	27.92	29.99	31.34	29.45	31.67	33.23
	SHC	0.87	5.84	10.97	–2.49	1.35	5.68	–5.06	–1.85	1.94
	kW	3.97	3.93	3.91	3.96	3.95	3.93	3.92	3.89	3.87
60	TC	27.59	29.22	30.17	28.70	30.33	31.30	31.50	31.32	32.91
	SHC	1.91	6.25	11.02	–1.79	1.63	5.57	–3.31	–2.39	1.45
	kW	3.95	3.99	4.01	3.99	4.02	4.04	4.09	4.05	4.01
50	TC	27.77	29.18	30.03	28.75	30.18	32.02	29.63	32.07	32.96
	SHC	2.03	6.18	10.85	–1.80	1.43	6.25	–5.14	–1.69	1.45
	kW	4.03	4.08	4.11	4.07	4.12	4.05	4.12	4.06	4.09
40	TC	29.02	30.38	31.46	29.96	31.32	32.09	30.79	33.49	34.34
	SHC	3.26	7.34	10.07	–0.63	2.54	6.29	–4.01	–0.30	2.80
	kW	3.96	4.02	4.08	4.01	4.08	4.11	4.06	4.00	4.03

LEGEND

Edb – Entering Dry–Bulb
Ewb – Entering Wet–Bulb
kW – Compressor Motor Power Input
ldb – Leaving Dry–Bulb
lwb – Leaving Wet–Bulb
SHC – Sensible Heat Capacity (1000 Btuh) Gross
TC – Total Capacity (1000 Btuh) Gross

NOTES:

1. Direct interpolation is permissible. Do not extrapolate.
2. The following formulas may be used:

$$t_{ldb} = t_{edb} - \frac{\text{sensible capacity (Btuh)}}{1.10 \times \text{cfm}}$$

t_{lwb} = Wet–bulb temperature corresponding to enthalpy of air leaving evaporator coil (h_{lwb})

$$h_{lwb} = h_{ewb} - \frac{\text{total capacity (Btuh)}}{4.5 \times \text{cfm}}$$

Where: h_{ewb} = Enthalpy of air entering evaporator coil

Table 24 – COOLING CAPACITIES 2-STAGE COOLING 7.5 TONS

50HC*D08				AMBIENT TEMPERATURE														
				85			95			105			115			125		
				EA (dB)			EA (dB)			EA (dB)			EA (dB)			EA (dB)		
				75	80	85	75	80	85	75	80	85	75	80	85	75	80	85
2250 Cfm	EA (wB)	58	TC	81	81	91.8	77.9	77.9	88.4	74.7	74.7	84.6	71.1	71.1	80.6	67.3	67.3	76.3
			SHC	70.2	81	91.8	67.5	77.9	88.4	64.7	74.7	84.6	61.6	71.1	80.6	58.3	67.3	76.3
		62	TC	85.1	85.1	87.2	81.1	81.1	85.3	76.9	76.9	83.2	72.5	72.5	81	67.8	67.8	78.5
			SHC	63.3	75.3	87.2	61.4	73.4	85.3	59.5	71.3	83.2	57.3	69.2	81	55	66.7	78.5
		67	TC	93.3	93.3	93.3	89	89	89	84.3	84.3	84.3	79.4	79.4	79.4	74.1	74.1	74.1
			SHC	52.3	64.2	76.2	50.4	62.4	74.4	48.4	60.4	72.4	46.4	58.3	70.3	44.2	56.2	68.1
		72	TC	102.3	102.3	102.3	97.5	97.5	97.5	92.5	92.5	92.5	87.1	87.1	87.1	81.3	81.3	81.3
			SHC	40.9	53	65	39	51.1	63.1	37.1	49.2	61.2	35.1	47.1	59.1	32.9	44.9	57
		76	TC	–	110	110	–	104.8	104.8	–	99.4	99.4	–	93.5	93.5	–	87.3	87.3
			SHC	–	43.7	56.1	–	41.9	54.2	–	39.9	52.2	–	37.9	50.2	–	35.8	48
2625 Cfm	EA (wB)	58	TC	85.4	85.4	96.9	82.1	82.1	93.1	78.6	78.6	89.1	74.7	74.7	84.7	70.5	70.5	80
			SHC	74	85.4	96.9	71.2	82.1	93.1	68.1	78.6	89.1	64.7	74.7	84.7	61.1	70.5	80
		62	TC	87.8	87.8	95.7	83.7	83.7	93.6	79.3	79.3	91.3	75	75	87.8	70.6	70.6	83.2
			SHC	68.2	82	95.7	66.2	79.9	93.6	64.1	77.7	91.3	61.3	74.6	87.8	58	70.6	83.2
		67	TC	96	96	96	91.4	91.4	91.4	86.5	86.5	86.5	81.3	81.3	81.3	75.8	75.8	75.8
			SHC	55.4	69.3	83.2	53.5	67.4	81.2	51.5	65.4	79.2	49.4	63.2	77.1	47.2	61	74.8
		72	TC	105.2	105.2	105.2	100.1	100.1	100.1	94.8	94.8	94.8	89.1	89.1	89.1	83	83	83
			SHC	42.3	56.2	70.2	40.4	54.3	68.2	38.4	52.3	66.2	36.3	50.2	64.1	34.1	48	61.9
		76	TC	–	112.9	112.9	–	107.5	107.5	–	101.7	101.7	–	95.6	95.6	–	89.1	89.1
			SHC	–	45.5	59.8	–	43.6	57.8	–	41.7	55.8	–	39.6	53.7	–	37.4	51.5
3000 Cfm	EA (wB)	58	TC	89.2	89.2	101.1	85.6	85.6	97.1	81.8	81.8	92.8	77.7	77.7	88.1	73.2	73.2	83
			SHC	77.3	89.2	101.1	74.2	85.6	97.1	70.9	81.8	92.8	67.3	77.7	88.1	63.5	73.2	83
		62	TC	90.1	90.1	103.5	86.1	86.1	100.3	81.9	81.9	96.5	77.8	77.8	91.6	73.3	73.3	86.4
			SHC	72.7	88.1	103.5	70.1	85.2	100.3	67.3	81.9	96.5	63.9	77.8	91.6	60.2	73.3	86.4
		67	TC	98.1	98.1	98.1	93.3	93.3	93.3	88.2	88.2	88.2	82.8	82.8	83.6	77	77	81.3
			SHC	58.4	74.1	89.9	56.5	72.2	87.9	54.4	70.1	85.8	52.3	67.9	83.6	50	65.6	81.3
		72	TC	107.3	107.3	107.3	102.1	102.1	102.1	96.5	96.5	96.5	90.6	90.6	90.6	84.3	84.3	84.3
			SHC	43.5	59.3	75.1	41.6	57.3	73.1	39.5	55.3	71.1	37.4	53.2	69	35.2	50.9	66.7
		76	TC	–	115.2	115.2	–	109.5	109.5	–	103.5	103.5	–	97.2	97.2	–	90.4	90.4
			SHC	–	47.2	63.2	–	45.3	61.3	–	43.3	59.3	–	41.2	57.1	–	38.9	54.8
3375 Cfm	EA (wB)	58	TC	92.4	92.4	104.7	88.6	88.6	100.4	84.6	84.6	95.9	80.2	80.2	90.9	75.5	75.5	85.6
			SHC	80	92.4	104.7	76.8	88.6	100.4	73.3	84.6	95.9	69.5	80.2	90.9	65.4	75.5	85.6
		62	TC	92.5	92.5	109	88.7	88.7	104.5	84.6	84.6	99.7	80.3	80.3	94.6	75.6	75.6	89
			SHC	76	92.5	109	72.9	88.7	104.5	69.6	84.6	99.7	66	80.3	94.6	62.1	75.6	89
		67	TC	99.7	99.7	99.7	94.8	94.8	94.8	89.5	89.5	92.2	84	84	89.9	78	78	87.4
			SHC	61.3	78.8	96.4	59.3	76.8	94.3	57.2	74.7	92.2	55	72.4	89.9	52.6	70	87.4
		72	TC	109	109	109	103.6	103.6	103.6	97.8	97.8	97.8	91.8	91.8	91.8	85.3	85.3	85.3
			SHC	44.6	62.2	79.9	42.7	60.3	77.9	40.6	58.2	75.8	38.5	56.1	73.6	36.2	53.8	71.3
		76	TC	–	116.9	116.9	–	111.1	111.1	–	104.9	104.9	–	98.4	98.4	–	91.5	91.5
			SHC	–	48.8	66.6	–	46.8	64.6	–	44.8	62.6	–	42.7	60.4	–	40.4	58.1
3750 Cfm	EA (wB)	58	TC	95.1	95.1	107.8	91.2	91.2	103.3	86.9	86.9	98.5	82.3	82.3	93.3	77.4	77.4	87.8
			SHC	82.4	95.1	107.8	79	91.2	103.3	75.3	86.9	98.5	71.3	82.3	93.3	67.1	77.4	87.8
		62	TC	95.2	95.2	112.2	91.2	91.2	107.5	87	87	102.5	82.4	82.4	97.1	77.5	77.5	91.3
			SHC	78.2	95.2	112.2	75	91.2	107.5	71.5	87	102.5	67.7	82.4	97.1	63.7	77.5	91.3
		67	TC	101.1	101.1	102.6	96	96	100.5	90.6	90.6	98.3	84.9	84.9	95.9	78.9	78.9	93.2
			SHC	64	83.3	102.6	62	81.2	100.5	59.8	79.1	98.3	57.6	76.7	95.9	55.1	74.2	93.2
		72	TC	110.4	110.4	110.4	104.8	104.8	104.8	98.9	98.9	98.9	92.7	92.7	92.7	86.1	86.1	86.1
			SHC	45.7	65.1	84.5	43.7	63.1	82.5	41.7	61	80.4	39.5	58.8	78.2	37.2	56.5	75.9
		76	TC	–	118.3	118.3	–	112.4	112.4	–	106	106	–	99.4	99.4	–	92.3	92.3
			SHC	–	50.3	69.9	–	48.3	67.9	–	46.2	65.8	–	44.1	63.6	–	41.8	61.3

LEGEND:

– – Do not operate
Cfm – Cubic feet per minute (supply air)
EAT(db) – Entering air temperature (dry bulb)
EAT(wb) – Entering air temperature (wet bulb)
SHC – Sensible heat capacity
TC – Total capacity

50HC08 (7.5 TONS) – UNIT WITH HUMIDI–MIZER SYSTEM IS SUBCOOLING MODE										
Temp (F) Air Ent Condenser (Edb)		AIR ENTERING EVAPORATOR – CFM								
		2250 / 0.03			3000 / 0.04			3750 / 0.06		
		Air Entering Evaporator – Ewb (F)								
		72	67	62	72	67	62	72	67	62
75	TC	101.9	92.9	84.0	109.6	96.3	89.9	113.6	103.0	94.5
	SHC	43.9	54.6	66.7	50.2	62.7	80.9	56.8	75.8	93.0
	kW	4.60	4.54	4.48	4.65	4.50	4.52	4.68	4.60	4.55
85	TC	96.6	87.3	78.9	102.8	92.9	84.5	106.5	96.7	88.7
	SHC	36.8	49.3	61.9	43.8	59.7	75.9	50.2	69.8	87.4
	kW	5.15	5.09	5.04	5.20	5.13	5.08	5.22	5.16	5.11
95	TC	90.2	81.4	73.5	95.7	86.8	78.8	99.4	90.1	82.7
	SHC	30.8	43.9	56.9	37.2	54.1	70.5	43.6	63.8	81.6
	kW	5.78	5.72	5.67	5.82	5.76	5.71	5.85	5.79	5.74
105	TC	83.5	75.2	67.8	88.8	80.2	72.7	92.0	83.2	76.4
	SHC	24.6	38.2	51.7	30.8	48.0	64.9	36.7	57.4	75.5
	kW	6.50	6.45	6.40	6.54	6.48	6.43	6.57	6.50	6.46
115	TC	76.3	68.7	61.8	81.1	73.2	66.3	84.1	76.0	69.7
	SHC	17.9	32.1	46.2	23.7	41.5	59.0	29.4	50.7	69.0
	kW	7.32	7.28	7.24	7.35	7.31	7.27	7.38	7.32	7.29
125	TC	68.6	61.6	55.4	73.0	65.7	59.3	75.8	68.2	62.6
	SHC	10.9	25.6	40.3	16.2	34.7	52.6	21.7	43.6	62.1
	kW	8.24	8.22	8.20	8.27	8.23	8.21	8.29	8.25	8.22

50HC08 (7.5 TONS) – UNIT WITH HUMIDI–MIZER SYSTEM IN HOT GAS REHEAT MODE										
Temp (F) Air Ent Condenser (Edb)		AIR ENTERING EVAPORATOR – Ewb (F)								
		75 Dry Bulb			75 Dry Bulb			75 Dry Bulb		
		62.5 Wet Bulb			64 Wet Bulb			65.3 Wet Bulb		
		(50% Relative)			(56% Relative)			(60% Relative)		
		Air Entering Evaporator – Cfm								
		2250	3000	3750	2250	3000	3750	2250	3000	3750
80	TC	24.06	26.14	27.48	25.50	27.56	28.78	26.59	28.71	29.96
	SHC	–5.55	1.16	8.38	–10.20	–4.69	1.40	–14.39	–9.85	–4.68
	kW	4.43	4.42	4.41	4.40	4.41	4.42	4.42	4.43	4.44
75	TC	24.87	27.26	28.47	26.06	28.53	30.02	27.67	29.77	31.02
	SHC	–4.77	2.23	9.32	–9.65	–3.76	2.59	–13.35	–8.83	–3.66
	kW	4.42	4.36	4.38	4.45	4.38	4.36	4.36	4.39	4.40
70	TC	25.16	27.88	28.56	26.72	29.10	30.26	28.17	30.20	31.83
	SHC	–4.48	2.84	9.45	–9.02	–3.19	2.85	–12.88	–8.40	–2.87
	kW	4.49	4.38	4.48	4.44	4.41	4.44	4.40	4.44	4.40
60	TC	26.43	28.14	29.14	27.49	29.24	30.27	28.50	30.24	32.33
	SHC	–3.25	3.14	10.05	–8.26	–2.99	2.94	–12.54	–8.29	–2.32
	kW	4.48	4.55	4.59	4.53	4.60	4.65	4.58	4.65	4.54
50	TC	27.19	29.55	31.26	28.94	30.59	32.36	30.54	31.54	32.52
	SHC	–2.50	4.50	12.05	–6.87	–1.69	4.92	–10.60	–7.02	–2.07
	kW	4.53	4.51	4.46	4.48	4.57	4.52	4.43	4.63	4.70
40	TC	27.92	31.58	32.82	28.81	32.60	33.54	31.82	33.50	34.44
	SHC	–1.79	6.42	10.84	–6.94	0.23	6.05	–9.36	–5.15	–0.25
	kW	4.57	4.37	4.46	4.65	4.45	4.51	4.40	4.51	4.58

LEGEND

Edb – Entering Dry–Bulb
Ewb – Entering Wet–Bulb
kW – Compressor Motor Power Input
ldb – Leaving Dry–Bulb
lwb – Leaving Wet–Bulb
SHC – Sensible Heat Capacity (1000 Btuh) Gross
TC – Total Capacity (1000 Btuh) Gross

NOTES:

1. Direct interpolation is permissible. Do not extrapolate.
2. The following formulas may be used:

$$t_{ldb} = t_{edb} - \frac{\text{sensible capacity (Btuh)}}{1.10 \times \text{cfm}}$$

t_{lwb} = Wet–bulb temperature corresponding to enthalpy of air leaving evaporator coil (h_{lwb})

$$h_{lwb} = h_{ewb} - \frac{\text{total capacity (Btuh)}}{4.5 \times \text{cfm}}$$

Where: h_{ewb} = Enthalpy of air entering evaporator coil

Table 26 – COOLING CAPACITIES 2-STAGE COOLING 8.5 TONS

50HC*D09				AMBIENT TEMPERATURE														
				85			95			105			115			125		
				EA (dB)			EA (dB)			EA (dB)			EA (dB)			EA (dB)		
				75	80	85	75	80	85	75	80	85	75	80	85	75	80	85
2550 Cfm	EA (wB)	58	TC	90.5	90.5	102.4	87	87	98.5	83.2	83.2	94.2	79.1	79.1	89.6	74.7	74.7	84.6
			SHC	78.6	90.5	102.4	75.5	87	98.5	72.2	83.2	94.2	68.7	79.1	89.6	64.8	74.7	84.6
		62	TC	94.8	94.8	98.1	90.2	90.2	95.8	85.4	85.4	93.4	80.3	80.3	90.8	74.9	74.9	87.8
			SHC	71.2	84.6	98.1	69.1	82.4	95.8	66.8	80.1	93.4	64.3	77.5	90.8	61.6	74.7	87.8
		67	TC	104	104	104	99	99	99	93.7	93.7	93.7	88	88	88	81.9	81.9	81.9
			SHC	58.7	72.2	85.7	56.6	70	83.5	54.3	67.8	81.3	52	65.4	78.9	49.5	62.9	76.4
		72	TC	114	114	114	108.5	108.5	108.5	102.7	102.7	102.7	96.5	96.5	96.5	89.8	89.8	89.8
			SHC	45.8	59.3	72.9	43.7	57.2	70.8	41.4	55	68.5	39.1	52.7	66.2	36.7	50.2	63.7
		76	TC	–	122.4	122.4	–	116.5	116.5	–	110.3	110.3	–	103.7	103.7	–	96.5	96.5
			SHC	–	48.8	62.8	–	46.7	60.6	–	44.5	58.4	–	42.2	56	–	39.8	53.5
2975 Cfm	EA (wB)	58	TC	95.4	95.4	108	91.6	91.6	103.7	87.5	87.5	99	83.1	83.1	94	78.3	78.3	88.6
			SHC	82.8	95.4	108	79.5	91.6	103.7	75.9	87.5	99	72.1	83.1	94	68	78.3	88.6
		62	TC	97.7	97.7	107.4	93	93	104.9	88.1	88.1	102.1	83.2	83.2	97.9	78.4	78.4	92.2
			SHC	76.7	92	107.4	74.3	89.6	104.9	71.8	86.9	102.1	68.6	83.2	97.9	64.6	78.4	92.2
		67	TC	106.9	106.9	106.9	101.6	101.6	101.6	96	96	96	90.1	90.1	90.1	83.7	83.7	83.9
			SHC	62.3	77.8	93.4	60.1	75.6	91.2	57.8	73.3	88.9	55.4	70.9	86.5	52.8	68.3	83.9
		72	TC	117	117	117	111.2	111.2	111.2	105.1	105.1	105.1	98.6	98.6	98.6	91.7	91.7	91.7
			SHC	47.3	62.9	78.6	45.1	60.8	76.4	42.9	58.5	74.1	40.5	56.1	71.7	38	53.6	69.2
		76	TC	–	125.6	125.6	–	119.4	119.4	–	112.8	112.8	–	105.9	105.9	–	98.4	98.4
			SHC	–	50.8	66.8	–	48.7	64.6	–	46.4	62.3	–	44.1	59.9	–	41.6	57.4
3400 Cfm	EA (wB)	58	TC	99.5	99.5	112.7	95.4	95.4	108	91	91	103	86.3	86.3	97.7	81.2	81.2	91.9
			SHC	86.4	99.5	112.7	82.8	95.4	108	79	91	103	74.9	86.3	97.7	70.5	81.2	91.9
		62	TC	100.3	100.3	115.8	95.6	95.6	112.4	91.2	91.2	107.2	86.4	86.4	101.6	81.3	81.3	95.6
			SHC	81.5	98.6	115.8	78.7	95.6	112.4	75.1	91.2	107.2	71.2	86.4	101.6	67	81.3	95.6
		67	TC	109.1	109.1	109.1	103.6	103.6	103.6	97.8	97.8	97.8	91.6	91.6	93.7	85	85	90.9
			SHC	65.6	83.2	100.8	63.4	81	98.6	61	78.6	96.2	58.6	76.1	93.7	55.9	73.4	90.9
		72	TC	119.3	119.3	119.3	113.3	113.3	113.3	107	107	107	100.3	100.3	100.3	93	93	93
			SHC	48.7	66.4	84.1	46.5	64.2	81.8	44.2	61.8	79.5	41.8	59.4	77.1	39.2	56.9	74.5
		76	TC	–	128	128	–	121.5	121.5	–	114.7	114.7	–	107.5	107.5	–	99.8	99.8
			SHC	–	52.6	70.6	–	50.5	68.4	–	48.2	66.1	–	45.8	63.6	–	43.3	61.1
3825 Cfm	EA (wB)	58	TC	103	103	116.6	98.7	98.7	111.7	94	94	106.4	89	89	100.8	83.6	83.6	94.7
			SHC	89.4	103	116.6	85.6	98.7	111.7	81.6	94	106.4	77.3	89	100.8	72.6	83.6	94.7
		62	TC	103.1	103.1	121.3	98.8	98.8	116.1	94.1	94.1	110.7	89.1	89.1	104.8	83.7	83.7	98.4
			SHC	85	103.1	121.3	81.4	98.8	116.1	77.5	94.1	110.7	73.4	89.1	104.8	69	83.7	98.4
		67	TC	110.9	110.9	110.9	105.2	105.2	105.7	99.2	99.2	103.2	92.9	92.9	100.5	86.1	86.1	97.6
			SHC	68.8	88.4	108	66.5	86.1	105.7	64.1	83.7	103.2	61.6	81.1	100.5	58.9	78.3	97.6
		72	TC	121.2	121.2	121.2	114.9	114.9	114.9	108.4	108.4	108.4	101.5	101.5	101.5	94.1	94.1	94.1
			SHC	50	69.7	89.4	47.7	67.4	87.1	45.4	65.1	84.7	43	62.6	82.3	40.4	60	79.6
		76	TC	–	129.8	129.8	–	123.2	123.2	–	116.2	116.2	–	108.8	108.8	–	100.9	100.9
			SHC	–	54.4	74.3	–	52.2	72.1	–	49.9	69.7	–	47.5	67.3	–	44.9	64.7
4250 Cfm	EA (wB)	58	TC	106	106	119.9	101.4	101.4	114.8	96.6	96.6	109.3	91.3	91.3	103.4	85.7	85.7	97
			SHC	92	106	119.9	88	101.4	114.8	83.8	96.6	109.3	79.3	91.3	103.4	74.4	85.7	97
		62	TC	106.1	106.1	124.7	101.5	101.5	119.4	96.6	96.6	113.6	91.4	91.4	107.5	85.7	85.7	100.8
			SHC	87.4	106.1	124.7	83.6	101.5	119.4	79.6	96.6	113.6	75.3	91.4	107.5	70.6	85.7	100.8
		67	TC	112.3	112.3	114.9	106.5	106.5	112.5	100.4	100.4	109.9	93.9	93.9	107	87.1	87.1	103.8
			SHC	71.8	93.4	114.9	69.5	91	112.5	67	88.5	109.9	64.4	85.7	107	61.6	82.7	103.8
		72	TC	122.6	122.6	122.6	116.2	116.2	116.2	109.5	109.5	109.5	102.5	102.5	102.5	94.9	94.9	94.9
			SHC	51.2	72.8	94.5	48.9	70.5	92.2	46.6	68.2	89.8	44.1	65.7	87.3	41.5	63.1	84.6
		76	TC	–	131.3	131.3	–	124.5	124.5	–	117.4	117.4	–	109.8	109.8	–	101.8	101.8
			SHC	–	56	77.9	–	53.8	75.6	–	51.5	73.3	–	49.1	70.8	–	46.5	68.1

LEGEND:

– – Do not operate
Cfm – Cubic feet per minute (supply air)
EAT(db) – Entering air temperature (dry bulb)
EAT(wb) – Entering air temperature (wet bulb)
SHC – Sensible heat capacity
TC – Total capacity

50HC09 (8.5 TONS) – UNIT WITH HUMIDI–MIZER SYSTEM IN SUBCOOLING MODE										
Temp (F) Air Ent Condenser (Edb)		AIR ENTERING EVAPORATOR – CFM								
		2550 / 0.04			3400 / 0.06			4250 / 0.08		
		Air Entering Evaporator – Ewb (F)								
		72	67	62	72	67	62	72	67	62
75	TC	114.7	103.9	93.9	104.3	110.6	100.5	122.9	114.6	105.5
	SHC	48.7	62.2	75.7	84.7	74.2	91.4	60.6	85.1	103.9
	kW	5.17	5.09	5.01	5.10	5.14	5.07	5.20	5.18	5.11
85	TC	107.8	97.4	88.0	114.2	102.9	94.2	116.2	107.6	98.7
	SHC	42.3	56.3	70.3	49.7	67.0	85.6	61.1	78.7	97.3
	kW	5.79	5.71	5.63	5.85	5.75	5.69	5.88	5.80	5.72
95	TC	100.5	90.8	82.0	106.6	96.2	87.7	110.2	100.1	92.2
	SHC	35.6	50.2	64.8	42.8	61.0	79.6	49.2	71.9	91.0
	kW	6.50	6.42	6.34	6.56	6.46	6.40	6.59	6.50	6.44
105	TC	92.7	83.8	75.7	98.5	89.0	80.9	102.1	92.4	85.1
	SHC	28.5	43.9	59.1	35.4	54.6	73.4	41.9	64.9	84.2
	kW	7.30	7.23	7.16	7.36	7.28	7.21	7.40	7.31	7.25
115	TC	85.0	76.5	69.0	90.0	81.3	73.8	93.3	84.4	77.7
	SHC	21.5	37.4	53.1	27.7	47.6	66.9	34.0	57.7	77.0
	kW	8.23	8.16	8.10	8.27	8.20	8.14	8.31	8.23	8.18
125	TC	76.5	68.8	61.8	81.1	72.9	66.2	84.1	75.8	69.8
	SHC	13.8	30.4	46.7	19.7	40.0	60.1	25.6	50.0	69.8
	kW	9.25	9.20	9.16	9.28	9.22	9.19	9.31	9.25	9.21

50HC09 (8.5 TONS) – UNIT WITH HUMIDI–MIZER SYSTEM IN HOT GAS REHEAT MODE										
Temp (F) Air Ent Condenser (Edb)		AIR ENTERING EVAPORATOR – Ewb (F)								
		75 Dry Bulb			75 Dry Bulb			75 Dry Bulb		
		62.5 Wet Bulb			64 Wet Bulb			65.3 Wet Bulb		
		(50% Relative)			(56% Relative)			(60% Relative)		
		Air Entering Evaporator – Cfm								
		2550	3400	4250	2550	3400	4250	2550	3400	4250
80	TC	27.53	29.56	30.72	28.95	31.03	32.22	30.26	32.33	33.58
	SHC	–3.84	3.82	11.92	–9.25	–2.92	4.09	–13.93	–8.77	–2.82
	kW	5.09	5.11	5.13	5.11	5.14	5.15	5.14	5.15	5.17
75	TC	29.09	31.60	32.81	30.77	33.10	34.33	32.30	34.45	35.73
	SHC	–2.34	5.72	13.84	–7.51	–0.98	6.04	–11.95	–6.78	–0.82
	kW	4.97	4.91	4.93	4.95	4.94	4.95	4.94	4.96	4.97
70	TC	29.58	32.45	33.63	31.48	34.12	35.55	33.12	35.65	37.38
	SHC	–1.88	6.54	14.63	–6.83	0.00	7.20	–11.16	–5.63	0.75
	kW	4.99	4.90	4.92	4.96	4.90	4.89	4.93	4.90	4.86
60	TC	30.71	33.44	34.52	32.90	34.79	35.86	34.07	36.02	37.09
	SHC	–0.78	7.52	15.54	–5.47	0.68	7.57	–10.28	–5.24	0.55
	kW	5.03	4.95	5.00	4.94	5.01	5.05	4.99	5.06	5.09
50	TC	32.63	34.31	35.26	33.81	35.53	36.51	34.90	36.66	37.65
	SHC	1.05	8.38	16.29	–4.60	1.42	8.24	–9.49	–4.59	1.14
	kW	4.92	5.01	5.06	4.99	5.07	5.13	5.05	5.14	5.19
40	TC	31.94	33.26	35.77	32.96	35.70	37.86	35.17	38.01	38.92
	SHC	0.45	7.47	13.75	–5.35	1.63	9.52	–9.20	–3.29	2.36
	kW	5.16	5.27	5.20	5.25	5.19	5.10	5.16	5.11	5.17

LEGEND

Edb – Entering Dry–Bulb
Ewb – Entering Wet–Bulb
kW – Compressor Motor Power Input
ldb – Leaving Dry–Bulb
lwb – Leaving Wet–Bulb
SHC – Sensible Heat Capacity (1000 Btuh) Gross
TC – Total Capacity (1000 Btuh) Gross

NOTES:

1. Direct interpolation is permissible. Do not extrapolate.
2. The following formulas may be used:

$$t_{ldb} = t_{edb} - \frac{\text{sensible capacity (Btuh)}}{1.10 \times \text{cfm}}$$

t_{lwb} = Wet–bulb temperature corresponding to enthalpy of air leaving evaporator coil (h_{lwb})

$$h_{lwb} = h_{ewb} - \frac{\text{total capacity (Btuh)}}{4.5 \times \text{cfm}}$$

Where: h_{ewb} = Enthalpy of air entering evaporator coil

Table 28 – COOLING CAPACITIES 2-STAGE COOLING 10 TONS

50HC*D12				AMBIENT TEMPERATURE														
				85			95			105			115			125		
				EA (dB)			EA (dB)			EA (dB)			EA (dB)			EA (dB)		
				75	80	85	75	80	85	75	80	85	75	80	85	75	80	85
3000 Cfm	EA (wb)	58	TC	104.3	104.3	118.5	99.5	99.5	113	93.4	93.4	106.1	86.7	86.7	98.6	79.7	79.7	90.6
			SHC	90.2	104.3	118.5	86	99.5	113	80.6	93.4	106.1	74.9	86.7	98.6	68.8	79.7	90.6
		62	TC	109.7	109.7	112.4	103.6	103.6	109.5	95.9	95.9	105.9	87.6	87.6	101.2	79.8	79.8	94.4
			SHC	80.8	96.6	112.4	78	93.8	109.5	74.5	90.2	105.9	70.3	85.7	101.2	65.2	79.8	94.4
		67	TC	121.5	121.5	121.5	115.4	115.4	115.4	107.8	107.8	107.8	98.7	98.7	98.7	89.1	89.1	89.1
			SHC	65.2	81	96.9	62.7	78.6	94.5	59.7	75.6	91.5	56.2	72	87.9	52.5	68.3	84.2
		72	TC	133	133	133	127.1	127.1	127.1	120.5	120.5	120.5	112	112	112	102.1	102.1	102.1
			SHC	48.7	64.5	80.4	46.5	62.4	78.3	44.1	60	75.9	41.2	57.1	73	37.8	53.7	69.6
		76	TC	–	140.9	140.9	–	135.1	135.1	–	128.4	128.4	–	121.3	121.3	–	112.5	112.5
			SHC	–	50.6	67.1	–	48.7	65.2	–	46.6	63.1	–	44.3	60.7	–	41.4	57.7
3500 Cfm	EA (wb)	58	TC	109.9	109.9	124.9	104.9	104.9	119.3	98.7	98.7	112.2	91.6	91.6	104.2	84.2	84.2	95.8
			SHC	94.9	109.9	124.9	90.6	104.9	119.3	85.2	98.7	112.2	79	91.6	104.2	72.6	84.2	95.8
		62	TC	112.8	112.8	123.1	106.7	106.7	120	99.5	99.5	115.3	91.7	91.7	108.5	84.3	84.3	99.8
			SHC	86.8	104.9	123.1	83.9	102	120	80	97.6	115.3	74.9	91.7	108.5	68.8	84.3	99.8
		67	TC	124.2	124.2	124.2	118	118	118	110.3	110.3	110.3	101	101	101	91	91	92.5
			SHC	68.4	86.7	104.9	66.1	84.3	102.6	63.2	81.5	99.8	59.6	78	96.3	55.9	74.2	92.5
		72	TC	135.2	135.2	135.2	129.1	129.1	129.1	122.4	122.4	122.4	114.2	114.2	114.2	104.2	104.2	104.2
			SHC	49.2	67.3	85.4	47.1	65.3	83.4	44.8	63	81.2	42	60.4	78.7	38.7	57.1	75.5
		76	TC	–	142.4	142.4	–	136.5	136.5	–	129.6	129.6	–	122.4	122.4	–	114	114
			SHC	–	51.7	70.9	–	49.7	68.7	–	47.5	66.3	–	45.2	63.8	–	42.6	61.2
4000 Cfm	EA (wb)	58	TC	114.3	114.3	130	109.2	109.2	124.2	102.9	102.9	117	95.4	95.4	108.7	87.7	87.7	99.9
			SHC	98.6	114.3	130	94.2	109.2	124.2	88.7	102.9	117	82.2	95.4	108.7	75.5	87.7	99.9
		62	TC	115.3	115.3	132.4	109.6	109.6	128.3	102.9	102.9	121.9	95.5	95.5	113.2	87.8	87.8	104.1
			SHC	91.9	112.2	132.4	88.7	108.5	128.3	84	102.9	121.9	77.9	95.5	113.2	71.5	87.8	104.1
		67	TC	125.8	125.8	125.8	119.5	119.5	119.5	111.9	111.9	111.9	102.4	102.4	104.2	92.2	92.2	100.4
			SHC	71.3	91.8	112.3	69	89.6	110.2	66.2	86.9	107.6	62.8	83.5	104.2	59.1	79.7	100.4
		72	TC	136.3	136.3	136.3	130.2	130.2	130.2	123.4	123.4	123.4	115.4	115.4	115.4	105.3	105.3	105.3
			SHC	49.5	69.7	89.8	47.4	67.7	87.9	45.1	65.5	85.9	42.5	63.1	83.7	39.3	60.1	80.9
		76	TC	–	143.1	143.1	–	137.1	137.1	–	130.1	130.1	–	122.6	122.6	–	114.5	114.5
			SHC	–	52.2	73.2	–	50.2	71.1	–	48	68.7	–	45.7	66.4	–	43.3	64.1
4500 Cfm	EA (wb)	58	TC	117.5	117.5	133.8	112.4	112.4	127.9	106	106	120.7	98.4	98.4	112.1	90.3	90.3	103
			SHC	101.3	117.5	133.8	96.8	112.4	127.9	91.2	106	120.7	84.6	98.4	112.1	77.7	90.3	103
		62	TC	117.6	117.6	139.4	112.5	112.5	133.3	106.1	106.1	125.8	98.5	98.5	116.8	90.4	90.4	107.4
			SHC	95.9	117.6	139.4	91.6	112.5	133.3	86.4	106.1	125.8	80.1	98.5	116.8	73.5	90.4	107.4
		67	TC	126.6	126.6	126.6	120.2	120.2	120.2	112.8	112.8	114.8	103.2	103.2	111.6	93	93	107.6
			SHC	73.7	96.4	119.2	71.5	94.3	117.2	68.9	91.8	114.8	65.6	88.6	111.6	61.8	84.7	107.6
		72	TC	136.7	136.7	136.7	130.5	130.5	130.5	123.6	123.6	123.6	115.7	115.7	115.7	105.7	105.7	105.7
			SHC	49.4	71.6	93.7	47.4	69.7	91.9	45.1	67.5	89.9	42.7	65.4	88.2	39.5	62.6	85.8
		76	TC	–	143.1	143.1	–	137	137	–	129.9	129.9	–	122.4	122.4	–	114.3	114.3
			SHC	–	52.4	75.1	–	50.5	73.1	–	48.2	70.8	–	46	68.5	–	43.7	66.5
5000 Cfm	EA (wb)	58	TC	119.9	119.9	136.7	114.7	114.7	130.7	108.4	108.4	123.6	100.6	100.6	114.8	92.3	92.3	105.4
			SHC	103.2	119.9	136.7	98.6	114.7	130.7	93.2	108.4	123.6	86.4	100.6	114.8	79.2	92.3	105.4
		62	TC	120	120	142.4	114.7	114.7	136.2	108.5	108.5	128.8	100.7	100.7	119.7	92.4	92.4	109.9
			SHC	97.6	120	142.4	93.3	114.7	136.2	88.1	108.5	128.8	81.7	100.7	119.7	74.9	92.4	109.9
		67	TC	126.8	126.8	126.8	120.4	120.4	123.6	113.2	113.2	121.3	103.8	103.8	118.4	93.6	93.6	114
			SHC	75.7	100.6	125.4	73.6	98.6	123.6	71.2	96.2	121.3	68	93.2	118.4	64.2	89.1	114
		72	TC	136.5	136.5	136.5	130.2	130.2	130.2	123.2	123.2	123.2	115.5	115.5	115.5	105.6	105.6	105.6
			SHC	49.1	73.1	97	47.1	71.3	95.4	44.9	69.2	93.5	42.5	67.3	92	39.5	64.9	90.2
		76	TC	–	142.7	142.7	–	136.5	136.5	–	129.4	129.4	–	121.6	121.6	–	113.6	113.6
			SHC	–	52.2	76.7	–	50.4	74.7	–	48.2	72.4	–	45.9	70.1	–	43.7	68.3

LEGEND:

– – Do not operate
Cfm – Cubic feet per minute (supply air)
EAT(db) – Entering air temperature (dry bulb)
EAT(wb) – Entering air temperature (wet bulb)
SHC – Sensible heat capacity
TC – Total capacity

50HC12 (10 TONS) – UNIT WITH HUMIDI–MIZER SYSTEM IN SUBCOOLING MODE										
Temp (F) Air Ent Condenser (Edb)		AIR ENTERING EVAPORATOR – CFM								
		3000/0.04			4000/0.06			5000/0.07		
		Air Entering Evaporator – Ewb (F)								
		72	67	62	72	67	62	72	67	62
75	TC	135.8	123.1	111.6	144.0	130.9	119.2	148.7	135.7	122.9
	SHC	56.7	72.8	88.9	66.1	86.9	107.4	74.4	100.1	121.0
	kW	6.42	6.26	6.13	6.54	6.37	6.22	6.61	6.43	6.26
85	TC	127.3	115.4	104.5	134.9	120.1	111.7	139.3	126.9	116.8
	SHC	48.6	65.4	82.1	57.5	76.6	100.2	65.4	91.8	115.0
	kW	7.20	7.04	6.90	7.31	7.11	7.00	7.38	7.21	7.07
95	TC	118.1	106.5	96.9	125.2	113.6	103.6	129.5	117.8	108.4
	SHC	39.9	57.0	74.9	48.3	70.5	92.4	56.2	83.1	106.8
	kW	8.06	7.89	7.76	8.17	8.00	7.86	8.24	8.07	7.93
105	TC	107.3	97.8	87.8	114.5	103.8	94.5	117.6	107.3	99.0
	SHC	29.6	48.7	66.2	38.1	61.3	83.8	44.9	73.1	97.5
	kW	8.99	8.85	8.72	9.11	8.95	8.82	9.16	9.01	8.88
115	TC	95.7	86.3	78.2	102.1	91.3	83.4	105.7	95.8	88.2
	SHC	18.6	37.8	57.1	26.4	49.4	73.2	33.6	62.3	87.0
	kW	10.03	9.89	9.79	10.14	9.97	9.86	10.20	10.05	9.94
125	TC	83.7	75.2	67.7	87.5	80.1	72.5	92.1	83.1	75.2
	SHC	7.3	27.4	47.2	12.5	38.8	62.9	20.6	50.3	74.2
	kW	11.17	11.06	10.98	11.23	11.13	11.03	11.30	11.17	11.07

50HC12 (10 TONS) – UNIT WITH HUMIDI–MIZER SYSTEM IN HOT GAS REHEAT MODE										
Temp (F) Air Ent Condenser (Edb)		AIR ENTERING EVAPORATOR – Ewb (F)								
		75 Dry Bulb			75 Dry Bulb			75 Dry Bulb		
		62.5 Wet Bulb			64 Wet Bulb			65.3 Wet Bulb		
		(50% Relative)			(56% Relative)			(60% Relative)		
		Air Entering Evaporator – Cfm								
		3000	4000	5000	3000	4000	5000	3000	4000	5000
80	TC	45.83	49.08	50.90	47.62	50.84	52.72	49.16	52.45	54.33
	SHC	4.82	14.45	24.36	–1.60	6.39	14.99	–7.27	–0.59	6.73
	kW	7.33	7.46	7.55	7.40	7.53	7.62	7.46	7.60	7.68
75	TC	48.52	51.89	53.81	50.31	53.74	55.73	51.92	55.47	57.43
	SHC	7.37	17.08	27.08	0.95	9.11	17.81	–4.65	2.25	9.63
	kW	6.93	7.07	7.15	7.00	7.14	7.23	7.06	7.21	7.29
70	TC	51.15	54.66	56.69	52.96	56.60	58.66	54.65	58.34	60.43
	SHC	9.87	19.70	29.80	3.47	11.82	20.57	–2.05	4.98	12.45
	kW	6.56	6.69	6.78	6.62	6.76	6.85	6.68	6.83	6.91
60	TC	52.89	56.41	59.04	55.63	59.10	62.68	58.00	62.31	64.50
	SHC	11.58	21.44	32.07	6.06	14.26	24.41	1.21	8.78	16.36
	kW	6.60	6.80	6.72	6.53	6.71	6.51	6.46	6.48	6.58
50	TC	55.13	59.53	62.75	58.04	62.61	64.69	59.64	64.34	66.41
	SHC	13.77	24.43	35.63	8.41	17.62	26.38	2.80	10.77	18.23
	kW	6.57	6.53	6.44	6.43	6.41	6.54	6.52	6.50	6.64
40	TC	57.08	60.11	64.35	58.75	63.63	65.58	60.16	65.23	69.04
	SHC	15.67	25.05	33.55	9.13	18.64	27.28	3.34	11.67	20.76
	kW	6.51	6.77	6.62	6.64	6.54	6.70	6.75	6.65	6.50

LEGEND

Edb – Entering Dry–Bulb
Ewb – Entering Wet–Bulb
kW – Compressor Motor Power Input
ldb – Leaving Dry–Bulb
lwb – Leaving Wet–Bulb
SHC – Sensible Heat Capacity (1000 Btuh) Gross
TC – Total Capacity (1000 Btuh) Gross

NOTES:

1. Direct interpolation is permissible. Do not extrapolate.
2. The following formulas may be used:

$$t_{ldb} = t_{edb} - \frac{\text{sensible capacity (Btuh)}}{1.10 \times \text{cfm}}$$

t_{lwb} = Wet–bulb temperature corresponding to enthalpy of air leaving evaporator coil (h_{lwb})

$$h_{lwb} = h_{ewb} - \frac{\text{total capacity (Btuh)}}{4.5 \times \text{cfm}}$$

Where: h_{ewb} = Enthalpy of air entering evaporator coil

Table 30 – COOLING CAPACITIES 2-STAGE COOLING 12.5 TONS

50HC*D14				Ambient Temperature														
				85			95			105			115			125		
				EA (dB)			EA (dB)			EA (dB)			EA (dB)			EA (dB)		
				75	80	85	75	80	85	75	80	85	75	80	85	75	80	85
3750 Cfm	EA (wB)	58	TC	131.9	131.9	149.8	127.0	127.0	144.1	121.5	121.5	137.9	115.4	115.4	131.0	108.7	108.7	123.4
			SHC	114.1	131.9	149.8	109.8	127.0	144.1	105.0	121.5	137.9	99.8	115.4	131.0	94.0	108.7	123.4
		62	TC	138.0	138.0	143.4	131.7	131.7	140.4	124.7	124.7	136.9	117.1	117.1	133.1	109.4	109.4	127.4
			SHC	103.4	123.4	143.4	100.4	120.4	140.4	97.1	117.0	136.9	93.4	113.2	133.1	88.8	108.1	127.4
		67	TC	151.5	151.5	151.5	144.5	144.5	144.5	136.9	136.9	136.9	128.5	128.5	128.5	119.4	119.4	119.4
			SHC	85.1	105.2	125.3	82.1	102.2	122.3	78.9	99.0	119.0	75.4	95.5	115.5	71.7	91.8	111.8
		72	TC	166.1	166.1	166.1	158.5	158.5	158.5	150.2	150.2	150.2	141.1	141.1	141.1	131.3	131.3	131.3
			SHC	66.2	86.5	106.7	63.3	83.6	103.8	60.2	80.4	100.6	56.8	76.9	97.1	53.1	73.3	93.4
		76	TC	–	178.6	178.6	–	170.5	170.5	–	161.6	161.6	–	151.8	151.8	–	141.3	141.3
			SHC	–	71.1	91.8	–	68.3	88.9	–	65.2	85.8	–	61.8	82.5	–	58.2	78.7
4375 Cfm	EA (wB)	58	TC	139.2	139.2	158.0	133.8	133.8	151.9	127.9	127.9	145.2	121.3	121.3	137.7	114.1	114.1	129.5
			SHC	120.4	139.2	158.0	115.7	133.8	151.9	110.6	127.9	145.2	104.9	121.3	137.7	98.7	114.1	129.5
		62	TC	142.4	142.4	157.6	135.8	135.8	154.1	128.9	128.9	149.2	121.7	121.7	142.9	114.2	114.2	134.8
			SHC	111.5	134.5	157.6	108.2	131.2	154.1	104.2	126.7	149.2	99.4	121.1	142.9	93.6	114.2	134.8
		67	TC	155.8	155.8	155.8	148.5	148.5	148.5	140.4	140.4	140.4	131.6	131.6	131.6	122.1	122.1	123.0
			SHC	90.3	113.6	136.8	87.3	110.5	133.8	84.0	107.2	130.5	80.4	103.6	126.8	76.6	99.8	123.0
		72	TC	170.6	170.6	170.6	162.7	162.7	162.7	154.0	154.0	154.0	144.4	144.4	144.4	134.1	134.1	134.1
			SHC	68.5	91.9	115.3	65.5	88.9	112.3	62.3	85.6	109.0	58.8	82.1	105.4	55.1	78.4	101.7
		76	TC	–	183.3	183.3	–	174.8	174.8	–	165.4	165.4	–	155.2	155.2	–	144.3	144.3
			SHC	–	74.3	98.3	–	71.3	95.2	–	68.0	91.9	–	64.6	88.3	–	60.9	84.5
5000 Cfm	EA (wB)	58	TC	145.3	145.3	164.9	139.5	139.5	158.4	133.2	133.2	151.2	126.2	126.2	143.2	118.5	118.5	134.5
			SHC	125.6	145.3	164.9	120.7	139.5	158.4	115.2	133.2	151.2	109.1	126.2	143.2	102.5	118.5	134.5
		62	TC	146.5	146.5	169.3	140.2	140.2	163.9	133.3	133.3	157.4	126.3	126.3	149.1	118.6	118.6	140.0
			SHC	118.3	143.8	169.3	114.1	139.0	163.9	109.3	133.3	157.4	103.5	126.3	149.1	97.2	118.6	140.0
		67	TC	159.1	159.1	159.1	151.5	151.5	151.5	143.1	143.1	143.1	134.0	134.0	137.7	124.2	124.2	133.7
			SHC	95.2	121.6	148.0	92.2	118.5	144.9	88.8	115.1	141.5	85.1	111.4	137.7	81.3	107.5	133.7
		72	TC	174.1	174.1	174.1	165.9	165.9	165.9	156.8	156.8	156.8	146.9	146.9	146.9	136.2	136.2	136.2
			SHC	70.5	97.0	123.5	67.5	94.0	120.5	64.2	90.7	117.1	60.6	87.1	113.5	56.9	83.3	109.6
		76	TC	–	187.0	187.0	–	178.1	178.1	–	168.3	168.3	–	157.7	157.7	–	146.4	146.4
			SHC	–	77.0	104.0	–	74.0	100.9	–	70.7	97.5	–	67.2	93.9	–	63.4	90.0
5625 Cfm	EA (wB)	58	TC	150.4	150.4	170.8	144.4	144.4	163.9	137.7	137.7	156.3	130.3	130.3	147.9	122.2	122.2	138.7
			SHC	130.1	150.4	170.8	124.9	144.4	163.9	119.0	137.7	156.3	112.7	130.3	147.9	105.7	122.2	138.7
		62	TC	150.7	150.7	177.9	144.5	144.5	170.6	137.8	137.8	162.7	130.4	130.4	153.9	122.3	122.3	144.4
			SHC	123.5	150.7	177.9	118.4	144.5	170.6	112.9	137.8	162.7	106.8	130.4	153.9	100.2	122.3	144.4
		67	TC	161.7	161.7	161.7	153.9	153.9	155.6	145.3	145.3	152.1	135.9	135.9	148.2	125.9	125.9	143.9
			SHC	100.0	129.4	158.8	96.8	126.2	155.6	93.4	122.7	152.1	89.7	118.9	148.2	85.6	114.8	143.9
		72	TC	176.9	176.9	176.9	168.3	168.3	168.3	159.0	159.0	159.0	148.8	148.8	148.8	137.9	137.9	137.9
			SHC	72.3	101.9	131.5	69.3	98.8	128.4	66.0	95.5	125.0	62.4	91.8	121.3	58.6	88.0	117.4
		76	TC	–	189.8	189.8	–	180.6	180.6	–	170.6	170.6	–	159.7	159.7	–	148.1	148.1
			SHC	–	79.6	109.7	–	76.5	106.5	–	73.2	103.0	–	69.6	99.2	–	65.7	95.1
6250 Cfm	EA (wB)	58	TC	154.8	154.8	175.8	148.5	148.5	168.6	141.5	141.5	160.6	133.7	133.7	151.8	125.3	125.3	142.3
			SHC	133.9	154.8	175.8	128.4	148.5	168.6	122.3	141.5	160.6	115.6	133.7	151.8	108.4	125.3	142.3
		62	TC	155.0	155.0	183.0	148.6	148.6	175.5	141.6	141.6	167.2	133.9	133.9	158.0	125.4	125.4	148.1
			SHC	127.0	155.0	183.0	121.8	148.6	175.5	116.0	141.6	167.2	109.7	133.9	158.0	102.8	125.4	148.1
		67	TC	163.8	163.8	169.3	155.8	155.8	166.0	147.0	147.0	162.3	137.5	137.5	158.1	127.4	127.4	153.3
			SHC	104.5	136.9	169.3	101.3	133.6	166.0	97.8	130.0	162.3	93.9	126.0	158.1	89.7	121.5	153.3
		72	TC	179.1	179.1	179.1	170.3	170.3	170.3	160.8	160.8	160.8	150.3	150.3	150.3	139.2	139.2	139.2
			SHC	74.1	106.7	139.3	71.0	103.6	136.1	67.7	100.2	132.7	64.1	96.5	128.9	60.2	92.6	124.9
		76	TC	–	192.1	192.1	–	182.7	182.7	–	172.3	172.3	–	161.2	161.2	–	149.4	149.4
			SHC	–	82.1	115.1	–	79.0	111.8	–	75.6	108.2	–	71.9	104.3	–	67.9	100.0

LEGEND:

– – Do not operate
Cfm – Cubic feet per minute (supply air)
EAT(db) – Entering air temperature (dry bulb)
EAT(wb) – Entering air temperature (wet bulb)
SHC – Sensible heat capacity
TC – Total capacity

50HC14 (12.5 TONS) – UNIT WITH HUMIDI–MIZER SYSTEM IN SUBCOOLING MODE										
Temp (F) Air Ent Condenser (Edb)		AIR ENTERING EVAPORATOR – CFM								
		3750/0.02			5000/0.04			6250/0.05		
		Air Entering Evaporator – Ewb (F)								
		72	67	62	72	67	62	72	67	62
75	TC	162.0	147.4	132.8	185.6	167.2	148.8	209.5	187.2	164.9
	SHC	85.0	101.4	117.4	96.9	113.0	129.0	106.5	122.4	138.4
	kW	7.70	7.60	7.30	7.90	7.70	7.40	8.10	7.80	7.50
85	TC	154.8	140.9	127.0	171.7	154.4	137.1	188.8	168.0	147.2
	SHC	70.2	90.4	110.6	83.1	103.2	123.2	93.4	113.4	133.3
	kW	8.80	8.70	8.30	8.90	8.70	8.40	9.10	8.80	8.50
95	TC	147.5	134.4	121.2	157.8	141.6	125.4	168.1	148.8	129.6
	SHC	55.5	79.7	103.9	69.3	93.4	117.5	80.4	104.3	128.3
	kW	9.80	9.70	9.30	9.90	9.70	9.50	10.10	9.80	9.60
105	TC	140.3	127.8	115.4	143.8	128.7	113.7	147.4	129.7	111.9
	SHC	40.9	69.0	97.2	55.5	83.6	111.7	67.3	95.3	111.9
	kW	10.80	10.70	10.30	10.90	10.70	10.50	11.10	10.80	10.60
115	TC	133.0	121.3	109.5	129.9	115.9	101.9	126.7	110.5	94.2
	SHC	26.2	58.3	90.4	41.8	73.8	101.9	54.2	86.2	94.2
	kW	11.80	11.70	11.40	11.90	11.70	11.60	12.10	11.80	11.70
125	TC	125.8	114.7	103.7	115.9	103.1	90.2	106.0	91.3	76.6
	SHC	11.5	47.6	83.7	28.0	64.0	90.2	41.2	77.2	76.6
	kW	12.80	12.70	12.40	12.90	12.70	12.60	13.10	12.80	12.70

50HC14 (12.5 TONS) – UNIT WITH HUMIDI–MIZER SYSTEM IN HOT GAS REHEAT MODE										
Temp (F) Air Ent Condenser (Edb)		AIR ENTERING EVAPORATOR – Ewb (F)								
		75 Dry Bulb			75 Dry Bulb			75 Dry Bulb		
		62.5 Wet Bulb			64 Wet Bulb			65.3 Wet Bulb		
		(50% Relative)			(56% Relative)			(60% Relative)		
		Air Entering Evaporator – Cfm								
		3750	5000	6250	3750	5000	6250	3750	5000	6250
80	TC	57.70	60.00	66.40	60.20	66.80	69.50	64.30	69.10	72.30
	SHC	21.30	27.00	44.00	12.80	22.40	32.50	8.60	16.20	25.50
	kW	8.08	8.15	8.23	8.28	8.34	8.37	8.36	8.43	8.52
75	TC	59.00	61.20	67.90	61.40	68.10	71.00	65.80	70.70	73.70
	SHC	22.40	28.10	44.80	13.50	23.50	33.70	9.30	17.10	26.30
	kW	8.06	8.13	8.21	8.25	8.31	8.34	8.33	8.40	8.49
70	TC	60.40	62.90	69.20	63.10	69.40	72.50	67.00	72.00	75.00
	SHC	23.20	28.90	46.00	14.50	24.30	34.40	10.30	17.90	27.40
	kW	8.04	8.11	8.18	8.23	8.29	8.32	8.31	8.38	8.47
60	TC	63.40	65.70	72.00	65.90	72.30	75.20	70.00	74.80	77.80
	SHC	24.80	30.50	47.80	16.10	25.90	36.00	11.90	19.60	29.00
	kW	8.00	8.07	8.15	8.20	8.25	8.29	8.28	8.35	8.44
50	TC	66.20	68.60	74.30	68.80	74.60	78.20	72.80	77.80	80.70
	SHC	26.60	32.30	49.40	17.70	27.70	37.80	13.50	21.20	30.60
	kW	7.94	8.01	8.08	8.13	8.20	8.23	8.22	8.29	8.38
40	TC	69.10	71.60	77.80	71.80	78.00	81.00	75.70	80.60	83.70
	SHC	28.20	33.90	50.10	19.40	29.30	39.80	15.20	22.90	32.20
	kW	7.90	7.97	8.04	8.09	8.15	8.17	8.16	8.23	8.32

LEGEND

Edb – Entering Dry–Bulb
Ewb – Entering Wet–Bulb
kW – Compressor Motor Power Input
ldb – Leaving Dry–Bulb
lwb – Leaving Wet–Bulb
SHC – Sensible Heat Capacity (1000 Btuh) Gross
TC – Total Capacity (1000 Btuh) Gross

NOTES:

1. Direct interpolation is permissible. Do not extrapolate.
2. The following formulas may be used:

$$t_{ldb} = t_{edb} - \frac{\text{sensible capacity (Btuh)}}{1.10 \times \text{cfm}}$$

t_{lwb} = Wet–bulb temperature corresponding to enthalpy of air leaving evaporator coil (h_{lwb})

$$h_{lwb} = h_{ewb} - \frac{\text{total capacity (Btuh)}}{4.5 \times \text{cfm}}$$

Where: h_{ewb} = Enthalpy of air entering evaporator coil

Table 32 – STATIC PRESSURE ADDERS (in. wg) - Factory Options and/or Accessories

Electric Heaters

3–5 TONS										
CFM	600	900	1200	1400	1600	1800	2000	2200	2400	2600
1 Electric Heater Module	0.03	0.05	0.07	0.09	0.09	0.10	0.11	0.11	0.12	0.13
2 Electric Heater Modules	0.13	0.15	0.16	0.16	0.16	0.17	0.17	0.17	0.18	0.18

6 – 10 TONS								
CFM	2250	2500	2750	3000	3250	3500	3750	4000
1 Electric Heater Module	0.031	0.037	0.044	0.051	0.059	0.067	0.076	0.085
2 Electric Heater Modules	0.038	0.046	0.053	0.062	0.070	0.080	0.089	0.100

6 – 10 TONS								
CFM	4250	4500	4750	5000	5250	5500	5750	6000
1 Electric Heater Module	0.095	0.105	0.116	0.127	0.139	0.151	0.164	0.177
2 Electric Heater Modules	0.110	0.122	0.133	0.146	0.158	0.172	0.185	0.200

12.5 TON									
CFM	3750	4063	4375	4688	5000	5313	5625	5938	6250
Vertical - 1 Electric Heater Module	0.02	0.02	0.02	0.02	0.03	0.03	0.03	0.03	0.04
Vertical - 2 Electric Heater Modules	0.03	0.04	0.04	0.05	0.05	0.06	0.06	0.07	0.08
Horizontal - 1 Electric Heater Module	0.04	0.05	0.05	0.06	0.06	0.07	0.07	0.08	0.09
Horizontal - 2 Electric Heater Modules	0.04	0.04	0.04	0.05	0.05	0.06	0.06	0.07	0.08

Humidi-MiZer

3–6 TONS									
CFM (in. wg)	1000	1250	1500	1750	2000	2250	2500	2750	3000
3 Tons	0.04	0.052	0.07	–	–	–	–	–	–
4 Tons	–	0.106	0.138	0.172	0.21	–	–	–	–
5 Tons	–	–	0.138	0.172	0.21	0.252	0.30	–	–
6 Tons	–	–	–	0.112	0.125	0.161	0.19	0.22	0.25

7.5–12.5 TONS										
CFM (in. wg)	4000	4250	4500	4750	5000	5250	5500	5750	6000	6250
7.5 Tons	–	–	–	–	–	–	–	–	–	–
8.5 Tons	0.20	0.22	–	–	–	–	–	–	–	–
10 Tons	0.20	0.22	0.24	0.26	0.28	–	–	–	–	–
12.5 Tons	0.06	0.07	0.07	0.08	0.08	0.09	0.10	0.10	0.11	0.12

Vertical Application

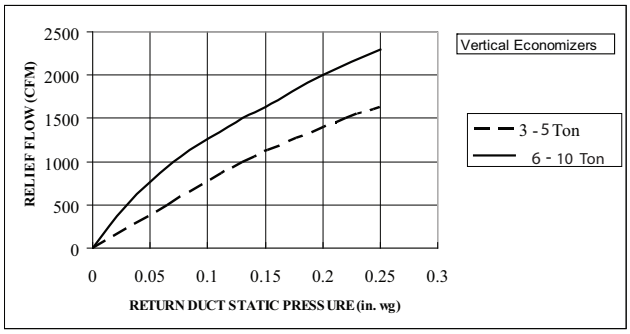

C10475

Fig. 17 - Barometric Relief Flow-Vertical 3-10 Ton

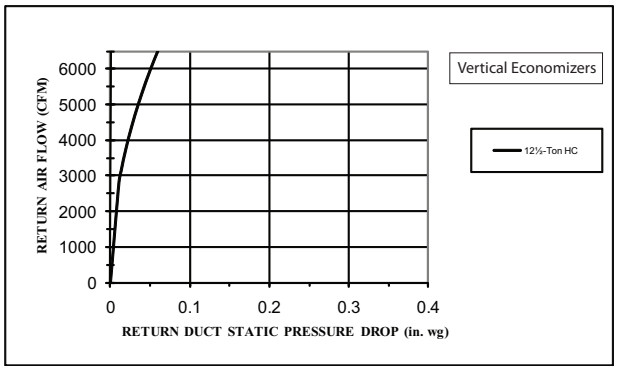

C101005

Fig. 19 - Return Air Pressure Drop-Vertical 12.5 Ton

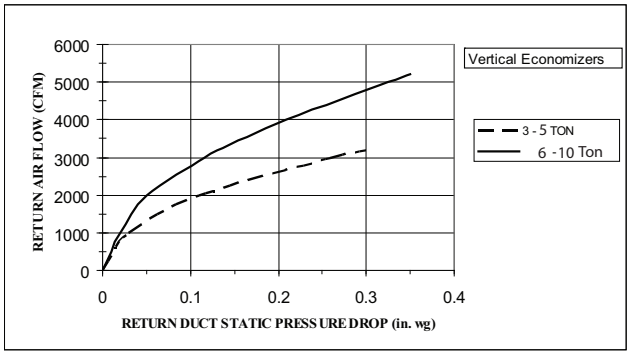

C10477

Fig. 18 - Return Air Pressure Drop-Vertical 3-10 Ton

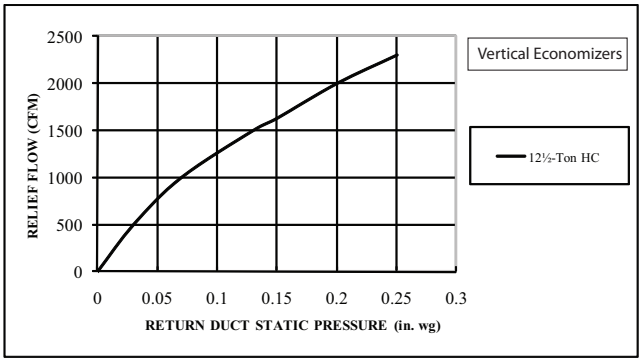

C101004

Fig. 20 - Barometric Relief Flow-Vertical 12.5 Ton

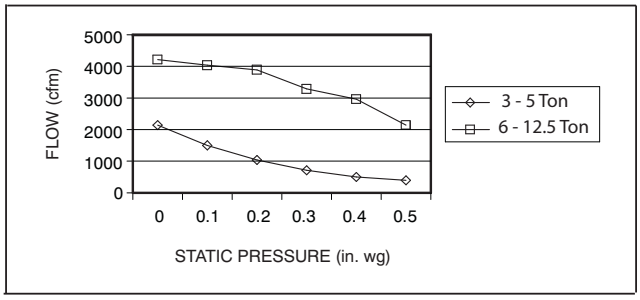

C10996

Fig. 21 - Vertical Power Exhaust Performance

Horizontal Application

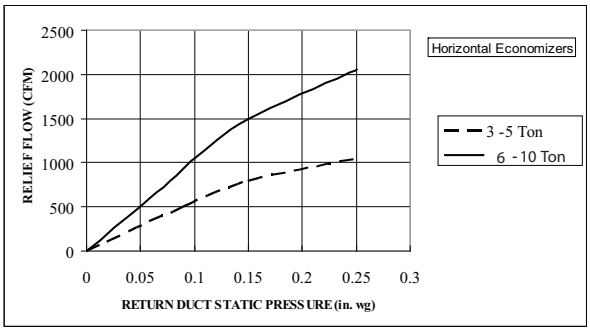

C10472

Fig. 22 - Barometric Relief Flow-Horizontal 3-10 Ton

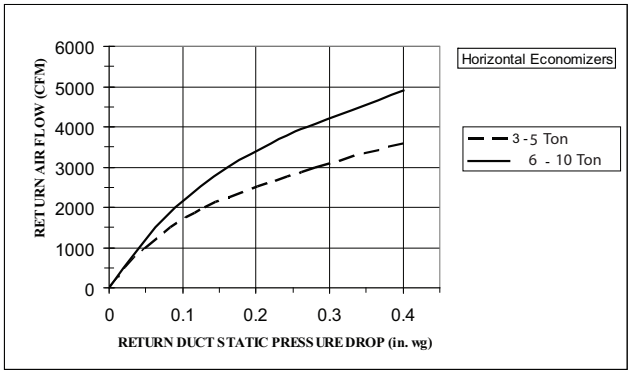

C10474

Fig. 23 - Return Air Pressure Drop-Horizontal 3-10 Ton

Horizontal Application (cont.)

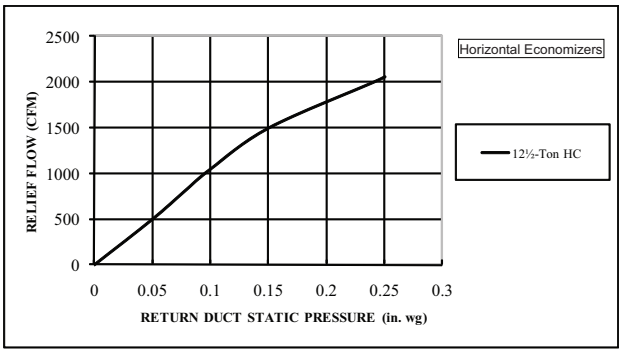

C101002

Fig. 24 - Barometric Relief Flow-Horizontal 12.5 Ton

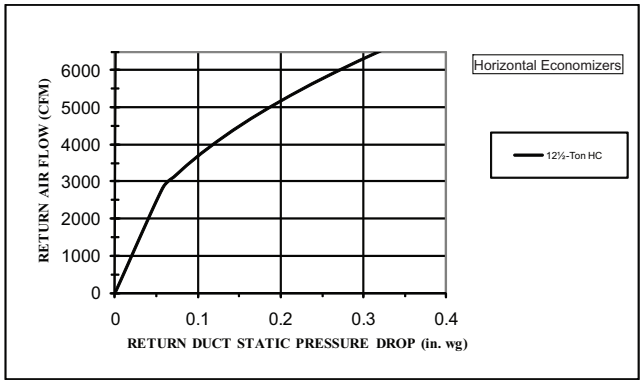

C101003

Fig. 25 - Return Air Pressure Drop-Horizontal-12.5 Ton

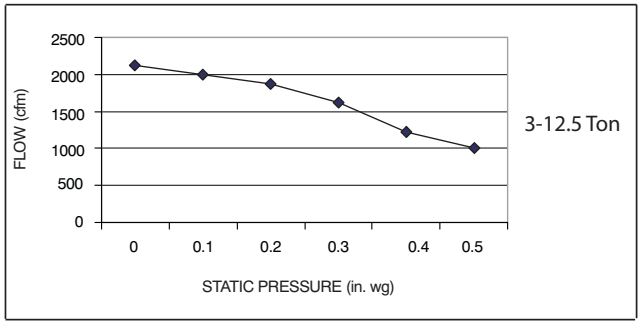

C10995

Fig. 26 - Horizontal Power Exhaust Performance

GENERAL FAN PERFORMANCE NOTES:

1. Interpolation is permissible. Do not extrapolate.
2. External static pressure is the static pressure difference between the return duct and the supply duct plus the static pressure caused by any FIOPs or accessories.
3. Tabular data accounts for pressure loss due to clean filters, unit casing, and wet coils. Factory options and accessories may add static pressure losses, as shown in Table 32. Selection software is available, through your salesperson, to help you select the best motor/drive combination for your application.
4. The Fan Performance tables offer motor/drive recommendations. In cases when two motor/drive combinations would work, Carrier recommended the lower horsepower option.
5. For information on the electrical properties of Carrier motors, please see the Electrical information section of this book.
6. For more information on the performance limits of Carrier motors, see the application data section of this book.
7. The EPACT (Energy Policy Act of 1992) regulates energy requirements for specific types of indoor fan motors. Motors regulated by EPACT include any general purpose, T-frame (three-digit, 143 and larger), single-speed, foot mounted, polyphase, squirrel cage induction motors of NEMA (National Electrical Manufacturers Association) design A and B, manufactured for use in the United States. Ranging from 1 to 200 Hp, these continuous-duty motors operate on 230 and 460 volt, 60 Hz power. If a motor does not fit into these specifications, the motor does not have to be replaced by an EPACT compliant energy-efficient motor. Variable-speed motors are exempt from EPACT compliance requirements.

FAN PERFORMANCE (BELT DRIVE)

Table 33 – 50HC04** **1 PHASE HUMIDI-MIZER** **3 TON VERTICAL SUPPLY**

CFM	Available External Static Pressure (in. wg)									
	0.2		0.4		0.6		0.8		1.0	
	RPM	BHP	RPM	BHP	RPM	BHP	RPM	BHP	RPM	BHP
900	594	0.15	740	0.25	867	0.37	981	0.52	1084	0.68
975	618	0.17	758	0.28	881	0.40	991	0.55	1092	0.71
1050	642	0.19	777	0.30	896	0.43	1003	0.58	1102	0.75
1125	668	0.22	797	0.34	912	0.47	1017	0.62	1113	0.79
1200	695	0.25	818	0.37	930	0.51	1032	0.66	1126	0.83
1275	722	0.29	841	0.41	949	0.55	1048	0.71	1140	0.88
1350	750	0.33	864	0.46	968	0.60	1065	0.76	1155	0.93
1425	778	0.37	888	0.50	989	0.65	1083	0.81	1171	0.99
1500	807	0.42	913	0.56	1011	0.71	1103	0.87	**1188**	**1.05**

CFM	Available External Static Pressure (in. wg)									
	1.2		1.4		1.6		1.8		2.0	
	RPM	BHP	RPM	BHP	RPM	BHP	RPM	BHP	RPM	BHP
900	**1180**	**0.86**	**1269**	**1.05**	**1354**	**1.25**	**1434**	**1.47**	**1511**	**1.70**
975	**1186**	**0.89**	**1275**	**1.08**	**1358**	**1.29**	**1437**	**1.51**	**1513**	**1.74**
1050	**1194**	**0.92**	**1281**	**1.12**	**1363**	**1.32**	**1441**	**1.54**	**1516**	**1.78**
1125	**1204**	**0.97**	**1289**	**1.16**	**1370**	**1.37**	**1447**	**1.59**	**1520**	**1.82**
1200	**1215**	**1.01**	**1298**	**1.21**	**1378**	**1.42**	**1454**	**1.64**	**1526**	**1.87**
1275	**1227**	**1.06**	**1309**	**1.26**	**1387**	**1.47**	**1462**	**1.69**	**1533**	**1.92**
1350	**1240**	**1.12**	**1321**	**1.32**	**1397**	**1.53**	**1471**	**1.75**	**1541**	**1.99**
1425	**1254**	**1.18**	**1333**	**1.38**	**1409**	**1.59**	**1481**	**1.82**	**–**	**–**
1500	**1270**	**1.24**	**1347**	**1.45**	**1421**	**1.66**	**1492**	**1.89**	**–**	**–**

NOTE: For more information, see General Fan Performance Notes.
Boldface indicates field–supplied drive is required.
Standard static 560–854 RPM, 1.2 BHP max
Medium static 770–1175 RPM, 1.2 BHP max

Table 34 – 50HC04** **3 PHASE NON-HUMIDI-MIZER** **3 TON VERTICAL SUPPLY**

CFM	Available External Static Pressure (in. wg)									
	0.2		0.4		0.6		0.8		1.0	
	RPM	BHP	RPM	BHP	RPM	BHP	RPM	BHP	RPM	BHP
900	**594**	**0.15**	**740**	**0.25**	867	0.37	981	0.52	1084	0.68
975	**618**	**0.17**	**758**	**0.28**	881	0.40	991	0.55	1092	0.71
1050	**642**	**0.19**	777	0.30	896	0.43	1003	0.58	1102	0.75
1125	**668**	**0.22**	797	0.34	912	0.47	1017	0.62	1113	0.79
1200	**695**	**0.25**	818	0.37	930	0.51	1032	0.66	1126	0.83
1275	**722**	**0.29**	841	0.41	949	0.55	1048	0.71	1140	0.88
1350	**750**	**0.33**	864	0.46	968	0.60	1065	0.76	1155	0.93
1425	778	0.37	888	0.50	989	0.65	1083	0.81	1171	0.99
1500	807	0.42	913	0.56	1011	0.71	1103	0.87	1188	1.05

CFM	Available External Static Pressure (in. wg)									
	1.2		1.4		1.6		1.8		2.0	
	RPM	BHP	RPM	BHP	RPM	BHP	RPM	BHP	RPM	BHP
900	1180	0.86	1269	1.05	1354	1.25	1434	1.47	**1511**	**1.70**
975	1186	0.89	1275	1.08	1358	1.29	1437	1.51	**1513**	**1.74**
1050	1194	0.92	1281	1.12	1363	1.32	1441	1.54	**1516**	**1.78**
1125	1204	0.97	1289	1.16	1370	1.37	1447	1.59	**1520**	**1.82**
1200	1215	1.01	1298	1.21	1378	1.42	1454	1.64	**1526**	**1.87**
1275	1227	1.06	1309	1.26	1387	1.47	1462	1.69	**1533**	**1.92**
1350	1240	1.12	1321	1.32	1397	1.53	**1471**	**1.75**	**1541**	**1.99**
1425	1254	1.18	1333	1.38	1409	1.59	**1481**	**1.82**	**–**	**–**
1500	1270	1.24	1347	1.45	1421	1.66	**1492**	**1.89**	**–**	**–**

NOTE: For more information, see General Fan Performance Notes.
Boldface indicates field–supplied drive is required.
Medium static 770–1175 RPM, 1.2 BHP max
High static 1035–1466 RPM, 2.4 BHP max

Table 35 – 50HC04** 3 PHASE HUMIDI-MIZER 3 TON VERTICAL SUPPLY

CFM	Available External Static Pressure (in. wg)									
	0.2		0.4		0.6		0.8		1.0	
	RPM	BHP	RPM	BHP	RPM	BHP	RPM	BHP	RPM	BHP
900	594	0.15	740	0.25	867	0.37	981	0.52	1084	0.68
975	618	0.17	758	0.28	881	0.40	991	0.55	1092	0.71
1050	642	0.19	777	0.30	896	0.43	1003	0.58	1102	0.75
1125	668	0.22	797	0.34	912	0.47	1017	0.62	1113	0.79
1200	695	0.25	818	0.37	930	0.51	1032	0.66	1126	0.83
1275	722	0.29	841	0.41	949	0.55	1048	0.71	1140	0.88
1350	750	0.33	864	0.46	968	0.60	1065	0.76	1155	0.93
1425	778	0.37	888	0.50	989	0.65	1083	0.81	1171	0.99
1500	807	0.42	913	0.56	1011	0.71	1103	0.87	1188	1.05

CFM	Available External Static Pressure (in. wg)									
	1.2		1.4		1.6		1.8		2.0	
	RPM	BHP	RPM	BHP	RPM	BHP	RPM	BHP	RPM	BHP
900	1180	0.86	1269	1.05	1354	1.25	1434	1.47	**1511**	**1.70**
975	1186	0.89	1275	1.08	1358	1.29	1437	1.51	**1513**	**1.74**
1050	1194	0.92	1281	1.12	1363	1.32	1441	1.54	**1516**	**1.78**
1125	1204	0.97	1289	1.16	1370	1.37	1447	1.59	**1520**	**1.82**
1200	1215	1.01	1298	1.21	1378	1.42	1454	1.64	**1526**	**1.87**
1275	1227	1.06	1309	1.26	1387	1.47	1462	1.69	**1533**	**1.92**
1350	1240	1.12	1321	1.32	1397	1.53	**1471**	**1.75**	**1541**	**1.99**
1425	1254	1.18	1333	1.38	1409	1.59	**1481**	**1.82**	**–**	**–**
1500	1270	1.24	1347	1.45	1421	1.66	**1492**	**1.89**	**–**	**–**

NOTE: For more information, see General Fan Performance Notes.
Boldface indicates field–supplied drive is required.

Standard static 560–854 RPM, 1.2 BHP max
Medium static 770–1175 RPM, 1.2 BHP max
High static 1035–1466 RPM, 2.4 BHP max

Table 36 – 50HC04** 1 PHASE HUMIDI-MIZER 3 TON HORIZONTAL SUPPLY

CFM	Available External Static Pressure (in. wg)									
	0.2		0.4		0.6		0.8		1.0	
	RPM	BHP	RPM	BHP	RPM	BHP	RPM	BHP	RPM	BHP
900	574	0.13	707	0.23	817	0.34	913	0.47	999	0.61
975	597	0.15	727	0.25	835	0.37	929	0.50	1015	0.64
1050	621	0.18	747	0.28	853	0.40	946	0.53	1030	0.68
1125	646	0.20	768	0.31	872	0.43	964	0.57	1047	0.72
1200	671	0.23	790	0.34	892	0.47	982	0.61	1064	0.76
1275	696	0.26	812	0.38	912	0.51	1001	0.65	1082	0.81
1350	723	0.30	835	0.42	933	0.55	1020	0.70	1100	0.86
1425	749	0.34	859	0.46	955	0.60	1040	0.75	1119	0.91
1500	776	0.38	883	0.51	977	0.65	1061	0.80	1138	0.97

CFM	Available External Static Pressure (in. wg)									
	1.2		1.4		1.6		1.8		2.0	
	RPM	BHP	RPM	BHP	RPM	BHP	RPM	BHP	RPM	BHP
900	1078	0.77	1151	0.93	**1220**	**1.11**	**1284**	**1.30**	**1346**	**1.49**
975	1093	0.80	1165	0.97	**1233**	**1.15**	**1297**	**1.33**	**1358**	**1.53**
1050	1108	0.84	**1180**	**1.01**	**1247**	**1.19**	**1311**	**1.38**	**1371**	**1.58**
1125	1123	0.88	**1195**	**1.05**	**1261**	**1.23**	**1325**	**1.42**	**1385**	**1.62**
1200	1140	0.92	**1210**	**1.10**	**1276**	**1.28**	**1339**	**1.47**	**1399**	**1.68**
1275	1157	0.97	**1226**	**1.15**	**1292**	**1.33**	**1354**	**1.53**	**1414**	**1.73**
1350	1174	1.02	**1243**	**1.20**	**1308**	**1.39**	**1370**	**1.59**	**1429**	**1.80**
1425	**1192**	**1.08**	**1260**	**1.26**	**1325**	**1.45**	**1386**	**1.65**	**1444**	**1.86**
1500	**1210**	**1.14**	**1278**	**1.33**	**1342**	**1.52**	**1403**	**1.72**	**1461**	**1.93**

NOTE: For more information, see General Fan Performance Notes.
Boldface indicates field–supplied drive is required.

Standard static 560–854 RPM, 1.2 BHP max
Medium static 770–1175 RPM, 1.2 BHP max

Table 37 – 50HC04** 3 PHASE NON-HUMIDI-MIZER 3 TON HORIZONTAL SUPPLY

CFM	Available External Static Pressure (in. wg)									
	0.2		0.4		0.6		0.8		1.0	
	RPM	BHP	RPM	BHP	RPM	BHP	RPM	BHP	RPM	BHP
900	**574**	**0.13**	**707**	**0.23**	817	0.34	913	0.47	999	0.61
975	**597**	**0.15**	**727**	**0.25**	835	0.37	929	0.50	1015	0.64
1050	**621**	**0.18**	**747**	**0.28**	853	0.40	946	0.53	1030	0.68
1125	**646**	**0.20**	**768**	**0.31**	872	0.43	964	0.57	1047	0.72
1200	**671**	**0.23**	790	0.34	892	0.47	982	0.61	1064	0.76
1275	**696**	**0.26**	812	0.38	912	0.51	1001	0.65	1082	0.81
1350	**723**	**0.30**	835	0.42	933	0.55	1020	0.70	1100	0.86
1425	**749**	**0.34**	859	0.46	955	0.60	1040	0.75	1119	0.91
1500	776	0.38	883	0.51	977	0.65	1061	0.80	1138	0.97

CFM	Available External Static Pressure (in. wg)									
	1.2		1.4		1.6		1.8		2.0	
	RPM	BHP	RPM	BHP	RPM	BHP	RPM	BHP	RPM	BHP
900	1078	0.77	1151	0.93	1220	1.11	1284	1.30	1346	1.49
975	1093	0.80	1165	0.97	1233	1.15	1297	1.33	1358	1.53
1050	1108	0.84	1180	1.01	1247	1.19	1311	1.38	1371	1.58
1125	1123	0.88	1195	1.05	1261	1.23	1325	1.42	1385	1.62
1200	1140	0.92	1210	1.10	1276	1.28	1339	1.47	1399	1.68
1275	1157	0.97	1226	1.15	1292	1.33	1354	1.53	1414	1.73
1350	1174	1.02	1243	1.20	1308	1.39	1370	1.59	1429	1.80
1425	1192	1.08	1260	1.26	1325	1.45	1386	1.65	1444	1.86
1500	1210	1.14	1278	1.33	1342	1.52	1403	1.72	1461	1.93

NOTE: For more information, see General Fan Performance Notes.
Boldface indicates field–supplied drive is required.
Medium static 770–1175 RPM, 1.2 BHP max
High static 1035–1466 RPM, 2.4 BHP max

Table 38 – 50HC04** 3 PHASE HUMIDI-MIZER 3 TON HORIZONTAL SUPPLY

CFM	Available External Static Pressure (in. wg)									
	0.2		0.4		0.6		0.8		1.0	
	RPM	BHP	RPM	BHP	RPM	BHP	RPM	BHP	RPM	BHP
900	574	0.13	707	0.23	817	0.34	913	0.47	999	0.61
975	597	0.15	727	0.25	835	0.37	929	0.50	1015	0.64
1050	621	0.18	747	0.28	853	0.40	946	0.53	1030	0.68
1125	646	0.20	768	0.31	872	0.43	964	0.57	1047	0.72
1200	671	0.23	790	0.34	892	0.47	982	0.61	1064	0.76
1275	696	0.26	812	0.38	912	0.51	1001	0.65	1082	0.81
1350	723	0.30	835	0.42	933	0.55	1020	0.70	1100	0.86
1425	749	0.34	859	0.46	955	0.60	1040	0.75	1119	0.91
1500	776	0.38	883	0.51	977	0.65	1061	0.80	1138	0.97

CFM	Available External Static Pressure (in. wg)									
	1.2		1.4		1.6		1.8		2.0	
	RPM	BHP	RPM	BHP	RPM	BHP	RPM	BHP	RPM	BHP
900	1078	0.77	1151	0.93	1220	1.11	1284	1.30	1346	1.49
975	1093	0.80	1165	0.97	1233	1.15	1297	1.33	1358	1.53
1050	1108	0.84	1180	1.01	1247	1.19	1311	1.38	1371	1.58
1125	1123	0.88	1195	1.05	1261	1.23	1325	1.42	1385	1.62
1200	1140	0.92	1210	1.10	1276	1.28	1339	1.47	1399	1.68
1275	1157	0.97	1226	1.15	1292	1.33	1354	1.53	1414	1.73
1350	1174	1.02	1243	1.20	1308	1.39	1370	1.59	1429	1.80
1425	1192	1.08	1260	1.26	1325	1.45	1386	1.65	1444	1.86
1500	1210	1.14	1278	1.33	1342	1.52	1403	1.72	1461	1.93

NOTE: For more information, see General Fan Performance Notes.
Boldface indicates field–supplied drive is required.
Standard static 560–854 RPM, 1.2 BHP max
Medium static 770–1175 RPM, 1.2 BHP max
High static 1035–1466 RPM, 2.4 BHP max

FAN PERFORMANCE (BELT DRIVE) (cont.)

Table 39 – 50HC05** 1 PHASE HUMIDI-MIZER 4 TON VERTICAL SUPPLY

CFM	Available External Static Pressure (in. wg)									
	0.2		0.4		0.6		0.8		1.0	
	RPM	BHP	RPM	BHP	RPM	BHP	RPM	BHP	RPM	BHP
1200	695	0.25	818	0.37	930	0.51	1032	0.66	1126	0.83
1300	731	0.30	849	0.43	955	0.57	1053	0.72	1145	0.89
1400	769	0.36	880	0.49	982	0.63	1077	0.79	1166	0.97
1500	807	0.42	913	0.56	1011	0.71	1103	0.87	1188	1.05
1600	847	0.49	948	0.63	1042	0.79	1130	0.96	1213	1.14
1700	887	0.57	983	0.72	1073	0.88	1158	1.06	1239	1.24
1800	928	0.66	1020	0.82	1106	0.98	1188	1.16	1266	1.35
1900	969	0.76	1057	0.92	1140	1.09	1219	1.28	1295	1.48
2000	1010	0.87	1095	1.04	1175	1.21	1251	1.41	1325	1.61

CFM	Available External Static Pressure (in. wg)									
	1.2		1.4		1.6		1.8		2.0	
	RPM	BHP	RPM	BHP	RPM	BHP	RPM	BHP	RPM	BHP
1200	**1215**	**1.01**	**1298**	**1.21**	**1378**	**1.42**	**1454**	**1.64**	**1526**	**1.87**
1300	**1231**	**1.08**	**1313**	**1.28**	**1390**	**1.49**	**1465**	**1.71**	**1536**	**1.94**
1400	**1249**	**1.16**	**1329**	**1.36**	**1405**	**1.57**	**1478**	**1.79**	**1547**	**2.03**
1500	**1270**	**1.24**	**1347**	**1.45**	**1421**	**1.66**	**1492**	**1.89**	**1561**	**2.13**
1600	**1292**	**1.34**	**1367**	**1.54**	**1440**	**1.76**	**1509**	**1.99**	**1576**	**2.23**
1700	**1315**	**1.44**	**1389**	**1.65**	**1459**	**1.88**	**1527**	**2.11**	**1593**	**2.35**
1800	**1341**	**1.56**	**1412**	**1.77**	**1481**	**2.00**	**1547**	**2.23**	**1612**	**2.48**
1900	**1367**	**1.68**	**1437**	**1.90**	**1504**	**2.13**	**1569**	**2.37**	**1632**	**2.62**
2000	**1395**	**1.82**	**1463**	**2.04**	**1528**	**2.28**	**1591**	**2.52**	**1653**	**2.77**

NOTE: For more information, see General Fan Performance Notes.
Boldface indicates field–supplied drive is required.
Standard Static 560–854 RPM, 1.2 BHP max
Medium Static 770–1175 RPM, 1.2 BHP max

Table 40 – 50HC05** 3 PHASE NON-HUMIDI-MIZER 4 TON VERTICAL SUPPLY

CFM	Available External Static Pressure (in. wg)									
	0.2		0.4		0.6		0.8		1.0	
	RPM	BHP	RPM	BHP	RPM	BHP	RPM	BHP	RPM	BHP
1200	**695**	**0.25**	**818**	**0.37**	930	0.51	1032	0.66	1126	0.83
1300	**731**	**0.30**	**849**	**0.43**	955	0.57	1053	0.72	1145	0.89
1400	**769**	**0.36**	**880**	**0.49**	982	0.63	1077	0.79	1166	0.97
1500	**807**	**0.42**	**913**	**0.56**	1011	0.71	1103	0.87	1188	1.05
1600	**847**	**0.49**	948	0.63	1042	0.79	1130	0.96	1213	1.14
1700	**887**	**0.57**	983	0.72	1073	0.88	1158	1.06	1239	1.24
1800	928	0.66	1020	0.82	1106	0.98	1188	1.16	1266	1.35
1900	969	0.76	1057	0.92	1140	1.09	1219	1.28	1295	1.48
2000	1010	0.87	1095	1.04	1175	1.21	1251	1.41	1325	1.61

CFM	Available External Static Pressure (in. wg)									
	1.2		1.4		1.6		1.8		2.0	
	RPM	BHP	RPM	BHP	RPM	BHP	RPM	BHP	RPM	BHP
1200	1215	1.01	1298	1.21	1378	1.42	1454	1.64	1526	1.87
1300	1231	1.08	1313	1.28	1390	1.49	1465	1.71	1536	1.94
1400	1249	1.16	1329	1.36	1405	1.57	1478	1.79	1547	2.03
1500	1270	1.24	1347	1.45	1421	1.66	1492	1.89	1561	2.13
1600	1292	1.34	1367	1.54	1440	1.76	1509	1.99	1576	2.23
1700	1315	1.44	1389	1.65	1459	1.88	1527	2.11	1593	2.35
1800	1341	1.56	1412	1.77	1481	2.00	1547	2.23	1612	2.48
1900	1367	1.68	1437	1.90	1504	2.13	1569	2.37	1632	2.62
2000	1395	1.82	1463	2.04	1528	2.28	1591	2.52	**1653**	**2.77**

NOTE: For more information, see General Fan Performance Notes.
Boldface indicates field–supplied drive is required.
Medium Static 920–1303 RPM, 1.7 BHP max
High Static 1208–1639 RPM, 2.9 BHP max

Table 41 – 50HC05** 3 PHASE HUMIDI-MIZER 4 TON VERTICAL SUPPLY

CFM	Available External Static Pressure (in. wg)									
	0.2		0.4		0.6		0.8		1.0	
	RPM	BHP	RPM	BHP	RPM	BHP	RPM	BHP	RPM	BHP
1200	695	0.25	818	0.37	930	0.51	1032	0.66	1126	0.83
1300	731	0.30	849	0.43	955	0.57	1053	0.72	1145	0.89
1400	769	0.36	880	0.49	982	0.63	1077	0.79	1166	0.97
1500	807	0.42	913	0.56	1011	0.71	1103	0.87	1188	1.05
1600	847	0.49	948	0.63	1042	0.79	1130	0.96	1213	1.14
1700	887	0.57	983	0.72	1073	0.88	1158	1.06	1239	1.24
1800	928	0.66	1020	0.82	1106	0.98	1188	1.16	1266	1.35
1900	969	0.76	1057	0.92	1140	1.09	1219	1.28	1295	1.48
2000	1010	0.87	1095	1.04	1175	1.21	1251	1.41	1325	1.61

CFM	Available External Static Pressure (in. wg)									
	1.2		1.4		1.6		1.8		2.0	
	RPM	BHP	RPM	BHP	RPM	BHP	RPM	BHP	RPM	BHP
1200	1215	1.01	1298	1.21	1378	1.42	1454	1.64	1526	1.87
1300	1231	1.08	1313	1.28	1390	1.49	1465	1.71	1536	1.94
1400	1249	1.16	1329	1.36	1405	1.57	1478	1.79	1547	2.03
1500	1270	1.24	1347	1.45	1421	1.66	1492	1.89	1561	2.13
1600	1292	1.34	1367	1.54	1440	1.76	1509	1.99	1576	2.23
1700	1315	1.44	1389	1.65	1459	1.88	1527	2.11	1593	2.35
1800	1341	1.56	1412	1.77	1481	2.00	1547	2.23	1612	2.48
1900	1367	1.68	1437	1.90	1504	2.13	1569	2.37	1632	2.62
2000	1395	1.82	1463	2.04	1528	2.28	1591	2.52	**1653**	**2.77**

NOTE: For more information, see General Fan Performance Notes.
Boldface indicates field–supplied drive is required.
Standard Static 560–854 RPM, 1.2 BHP max
Medium Static 770–1175 RPM, 1.7 BHP max
High Static 1208–1639 RPM, 2.9 BHP max

Table 42 – 50HC05** 1 PHASE HUMIDI-MIZER 4 TON HORIZONTAL SUPPLY

CFM	Available External Static Pressure (in. wg)									
	0.2		0.4		0.6		0.8		1.0	
	RPM	BHP	RPM	BHP	RPM	BHP	RPM	BHP	RPM	BHP
1200	671	0.23	790	0.34	892	0.47	982	0.61	1064	0.76
1300	705	0.28	820	0.39	919	0.52	1007	0.67	1088	0.82
1400	740	0.33	851	0.45	947	0.58	1034	0.73	1113	0.89
1500	776	0.38	883	0.51	977	0.65	1061	0.80	1138	0.97
1600	813	0.45	916	0.58	1007	0.73	1089	0.89	1165	1.05
1700	851	0.52	949	0.66	1038	0.81	1118	0.97	**1192**	**1.15**
1800	888	0.60	984	0.75	1069	0.90	1148	1.07	**1221**	**1.25**
1900	927	0.69	1019	0.84	1102	1.00	**1179**	**1.18**	**1250**	**1.36**
2000	965	0.78	1054	0.94	1135	1.11	**1210**	**1.29**	**1280**	**1.48**

CFM	Available External Static Pressure (in. wg)									
	1.2		1.4		1.6		1.8		2.0	
	RPM	BHP	RPM	BHP	RPM	BHP	RPM	BHP	RPM	BHP
1200	1140	0.92	**1210**	**1.10**	**1276**	**1.28**	**1339**	**1.47**	**1399**	**1.68**
1300	1162	0.99	**1232**	**1.16**	**1297**	**1.35**	**1360**	**1.55**	**1419**	**1.75**
1400	**1186**	**1.06**	**1254**	**1.24**	**1319**	**1.43**	**1381**	**1.63**	**1439**	**1.84**
1500	**1210**	**1.14**	**1278**	**1.33**	**1342**	**1.52**	**1403**	**1.72**	**1461**	**1.93**
1600	**1236**	**1.23**	**1302**	**1.42**	**1365**	**1.62**	**1425**	**1.82**	**1483**	**2.04**
1700	**1262**	**1.33**	**1328**	**1.52**	**1390**	**1.72**	**1449**	**1.93**	**1505**	**2.15**
1800	**1289**	**1.44**	**1354**	**1.63**	**1415**	**1.84**	**1473**	**2.05**	**1529**	**2.27**
1900	**1317**	**1.55**	**1380**	**1.75**	**1441**	**1.96**	**1498**	**2.18**	**1553**	**2.41**
2000	**1345**	**1.68**	**1408**	**1.88**	**1467**	**2.10**	**1524**	**2.32**	**1579**	**2.55**

NOTE: For more information, see General Fan Performance Notes.
Boldface indicates field–supplied drive is required.
Standard Static 560–854 RPM, 1.2 BHP max
Medium Static 770–1175 RPM, 1.2 BHP max

FAN PERFORMANCE (BELT DRIVE) (cont.)

Table 43 – 50HC05** 3 PHASE NON-HUMIDI-MIZER 4 TON HORIZONTAL SUPPLY

CFM	Available External Static Pressure (in. wg)									
	0.2		0.4		0.6		0.8		1.0	
	RPM	BHP	RPM	BHP	RPM	BHP	RPM	BHP	RPM	BHP
1200	**671**	**0.23**	**790**	**0.34**	**892**	**0.47**	982	0.61	1064	0.76
1300	**705**	**0.28**	**820**	**0.39**	**919**	**0.52**	1007	0.67	1088	0.82
1400	**740**	**0.33**	**851**	**0.45**	947	0.58	1034	0.73	1113	0.89
1500	**776**	**0.38**	**883**	**0.51**	977	0.65	1061	0.80	1138	0.97
1600	**813**	**0.45**	**916**	**0.58**	1007	0.73	1089	0.89	1165	1.05
1700	**851**	**0.52**	949	0.66	1038	0.81	1118	0.97	1192	1.15
1800	**888**	**0.60**	984	0.75	1069	0.90	1148	1.07	1221	1.25
1900	927	0.69	1019	0.84	1102	1.00	1179	1.18	1250	1.36
2000	965	0.78	1054	0.94	1135	1.11	1210	1.29	1280	1.48

CFM	Available External Static Pressure (in. wg)									
	1.2		1.4		1.6		1.8		2.0	
	RPM	BHP	RPM	BHP	RPM	BHP	RPM	BHP	RPM	BHP
1200	1140	0.92	1210	1.10	1276	1.28	1339	1.47	1399	1.68
1300	1162	0.99	1232	1.16	1297	1.35	1360	1.55	1419	1.75
1400	1186	1.06	1254	1.24	1319	1.43	1381	1.63	1439	1.84
1500	1210	1.14	1278	1.33	1342	1.52	1403	1.72	1461	1.93
1600	1236	1.23	1302	1.42	1365	1.62	1425	1.82	1483	2.04
1700	1262	1.33	1328	1.52	1390	1.72	1449	1.93	1505	2.15
1800	1289	1.44	1354	1.63	1415	1.84	1473	2.05	1529	2.27
1900	1317	1.55	1380	1.75	1441	1.96	1498	2.18	1553	2.41
2000	1345	1.68	1408	1.88	1467	2.10	1524	2.32	1579	2.55

NOTE: For more information, see General Fan Performance Notes.
Boldface indicates field–supplied drive is required.
Medium Static 920–1303 RPM, 1.7 BHP max
High Static 1208–1639 RPM, 2.9 max BHP

Table 44 – 50HC05** 3 PHASE HUMIDI-MIZER 4 TON HORIZONTAL SUPPLY

CFM	Available External Static Pressure (in. wg)									
	0.2		0.4		0.6		0.8		1.0	
	RPM	BHP	RPM	BHP	RPM	BHP	RPM	BHP	RPM	BHP
1200	671	0.23	790	0.34	892	0.47	982	0.61	1064	0.76
1300	705	0.28	820	0.39	919	0.52	1007	0.67	1088	0.82
1400	740	0.33	851	0.45	947	0.58	1034	0.73	1113	0.89
1500	776	0.38	883	0.51	977	0.65	1061	0.80	1138	0.97
1600	813	0.45	916	0.58	1007	0.73	1089	0.89	1165	1.05
1700	851	0.52	949	0.66	1038	0.81	1118	0.97	1192	1.15
1800	888	0.60	984	0.75	1069	0.90	1148	1.07	1221	1.25
1900	927	0.69	1019	0.84	1102	1.00	1179	1.18	1250	1.36
2000	965	0.78	1054	0.94	1135	1.11	1210	1.29	1280	1.48

CFM	Available External Static Pressure (in. wg)									
	1.2		1.4		1.6		1.8		2.0	
	RPM	BHP	RPM	BHP	RPM	BHP	RPM	BHP	RPM	BHP
1200	1140	0.92	1210	1.10	1276	1.28	1339	1.47	1399	1.68
1300	1162	0.99	1232	1.16	1297	1.35	1360	1.55	1419	1.75
1400	1186	1.06	1254	1.24	1319	1.43	1381	1.63	1439	1.84
1500	1210	1.14	1278	1.33	1342	1.52	1403	1.72	1461	1.93
1600	1236	1.23	1302	1.42	1365	1.62	1425	1.82	1483	2.04
1700	1262	1.33	1328	1.52	1390	1.72	1449	1.93	1505	2.15
1800	1289	1.44	1354	1.63	1415	1.84	1473	2.05	1529	2.27
1900	1317	1.55	1380	1.75	1441	1.96	1498	2.18	1553	2.41
2000	1345	1.68	1408	1.88	1467	2.10	1524	2.32	1579	2.55

NOTE: For more information, see General Fan Performance Notes.
Boldface indicates field–supplied drive is required.
Standard Static 560–854 RPM, 1.2 BHP max
Medium Static 770–1175 RPM, 1.7 BHP max
High Static 1208–1639 RPM, 2.9 BHP max

Table 45 – 50HC06** 1 PHASE HUMIDI-MIZER 5 TON VERTICAL SUPPLY

CFM	Available External Static Pressure (in. wg)									
	0.2		0.4		0.6		0.8		1.0	
	RPM	BHP	RPM	BHP	RPM	BHP	RPM	BHP	RPM	BHP
1500	794	0.41	902	0.55	993	0.69	1074	0.85	1147	1.00
1625	840	0.49	945	0.64	1034	0.80	1113	0.96	1185	1.13
1750	888	0.59	988	0.75	1075	0.92	1153	1.09	1223	1.26
1875	936	0.70	1033	0.87	1117	1.05	1193	1.23	1263	1.41
2000	984	0.82	1078	1.00	1160	1.19	1235	1.39	1303	1.58
2125	1033	0.96	1124	1.15	1204	1.35	1277	1.56	1343	1.76
2250	1083	1.11	1170	1.32	1248	1.53	1319	1.74	**1385**	**1.96**
2375	1133	1.28	1217	1.50	1293	1.72	**1363**	**1.95**	**1427**	**2.17**
2500	1183	1.47	1265	1.70	**1339**	**1.93**	**1406**	**2.17**	**1470**	**2.41**

CFM	Available External Static Pressure (in. wg)									
	1.2		1.4		1.6		1.8		2.0	
	RPM	BHP	RPM	BHP	RPM	BHP	RPM	BHP	RPM	BHP
1500	1214	1.16	1277	1.33	1336	1.50	1392	1.67	**1445**	**1.85**
1625	1251	1.30	1313	1.47	1371	1.65	**1427**	**1.83**	**1479**	**2.02**
1750	1289	1.44	1350	1.63	**1407**	**1.81**	**1462**	**2.01**	**1514**	**2.20**
1875	1327	1.60	**1387**	**1.80**	**1444**	**1.99**	**1498**	**2.19**	**1550**	**2.40**
2000	1366	1.78	**1426**	**1.98**	**1482**	**2.19**	**1535**	**2.40**	**1586**	**2.61**
2125	**1406**	**1.97**	**1464**	**2.18**	**1520**	**2.40**	**1573**	**2.62**	**1623**	**2.84**
2250	**1446**	**2.18**	**1504**	**2.40**	**1559**	**2.62**	**1611**	**2.85**	**1661**	**3.09**
2375	**1487**	**2.40**	**1544**	**2.63**	**1598**	**2.87**	**1650**	**3.11**	**–**	**–**
2500	**1529**	**2.64**	**1585**	**2.89**	**1638**	**3.13**	**–**	**–**	**–**	**–**

NOTE: For more information, see General Fan Performance Notes.
Boldface indicates field–supplied drive is required.

Standard Static 770–1175 RPM, 1.2 BHP max
Medium Static 1035–1466 RPM, 1.5 BHP max

Table 46 – 50HC06** 3 PHASE NON-HUMIDI-MIZER 5 TON VERTICAL SUPPLY

CFM	Available External Static Pressure (in. wg)									
	0.2		0.4		0.6		0.8		1.0	
	RPM	BHP	RPM	BHP	RPM	BHP	RPM	BHP	RPM	BHP
1500	**794**	**0.41**	**902**	**0.55**	**993**	**0.69**	1074	0.85	1147	1.00
1625	**840**	**0.49**	**945**	**0.64**	**1034**	**0.80**	1113	0.96	1185	1.13
1750	**888**	**0.59**	**988**	**0.75**	1075	0.92	1153	1.09	1223	1.26
1875	**936**	**0.70**	**1033**	**0.87**	1117	1.05	1193	1.23	1263	1.41
2000	**984**	**0.82**	1078	1.00	1160	1.19	1235	1.39	1303	1.58
2125	**1033**	**0.96**	1124	1.15	1204	1.35	1277	1.56	1343	1.76
2250	1083	1.11	1170	1.32	1248	1.53	1319	1.74	1385	1.96
2375	1133	1.28	1217	1.50	1293	1.72	1363	1.95	1427	2.17
2500	1183	1.47	1265	1.70	1339	1.93	1406	2.17	1470	2.41

CFM	Available External Static Pressure (in. wg)									
	1.2		1.4		1.6		1.8		2.0	
	RPM	BHP	RPM	BHP	RPM	BHP	RPM	BHP	RPM	BHP
1500	1214	1.16	1277	1.33	1336	1.50	1392	1.67	1445	1.85
1625	1251	1.30	1313	1.47	1371	1.65	1427	1.83	1479	2.02
1750	1289	1.44	1350	1.63	1407	1.81	1462	2.01	1514	2.20
1875	1327	1.60	1387	1.80	1444	1.99	1498	2.19	1550	2.40
2000	1366	1.78	1426	1.98	1482	2.19	1535	2.40	1586	2.61
2125	1406	1.97	1464	2.18	1520	2.40	1573	2.62	1623	2.84
2250	1446	2.18	1504	2.40	1559	2.62	1611	2.85	**1661**	**3.09**
2375	1487	2.40	1544	2.63	1598	2.87	**1650**	**3.11**	–	–
2500	1529	2.64	1585	2.89	**1638**	**3.13**	–	–	–	–

NOTE: For more information, see General Fan Performance Notes.
Boldface indicates field–supplied drive is required.

Medium Static 1035 – 1466 RPM, 2.4 BHP max
High Static 1303 – 1687 RPM, 2.9 max BHP

Table 47 – 50HC06** 3 PHASE HUMIDI-MIZER 5 TON VERTICAL SUPPLY

CFM	Available External Static Pressure (in. wg)									
	0.2		0.4		0.6		0.8		1.0	
	RPM	BHP	RPM	BHP	RPM	BHP	RPM	BHP	RPM	BHP
1500	794	0.41	902	0.55	993	0.69	1074	0.85	1147	1.00
1625	840	0.49	945	0.64	1034	0.80	1113	0.96	1185	1.13
1750	888	0.59	988	0.75	1075	0.92	1153	1.09	1223	1.26
1875	936	0.70	1033	0.87	1117	1.05	1193	1.23	1263	1.41
2000	984	0.82	1078	1.00	1160	1.19	1235	1.39	1303	1.58
2125	1033	0.96	1124	1.15	1204	1.35	1277	1.56	1343	1.76
2250	1083	1.11	1170	1.32	1248	1.53	1319	1.74	1385	1.96
2375	1133	1.28	1217	1.50	1293	1.72	1363	1.95	1427	2.17
2500	1183	1.47	1265	1.70	1339	1.93	1406	2.17	1470	2.41

CFM	Available External Static Pressure (in. wg)									
	1.2		1.4		1.6		1.8		2.0	
	RPM	BHP	RPM	BHP	RPM	BHP	RPM	BHP	RPM	BHP
1500	1214	1.16	1277	1.33	1336	1.50	1392	1.67	1445	1.85
1625	1251	1.30	1313	1.47	1371	1.65	1427	1.83	1479	2.02
1750	1289	1.44	1350	1.63	1407	1.81	1462	2.01	1514	2.20
1875	1327	1.60	1387	1.80	1444	1.99	1498	2.19	1550	2.40
2000	1366	1.78	1426	1.98	1482	2.19	1535	2.40	1586	2.61
2125	1406	1.97	1464	2.18	1520	2.40	1573	2.62	1623	2.84
2250	1446	2.18	1504	2.40	1559	2.62	1611	2.85	**1661**	**3.09**
2375	1487	2.40	1544	2.63	1598	2.87	**1650**	**3.11**	–	–
2500	1529	2.64	1585	2.89	**1638**	**3.13**	–	–	–	–

NOTE: For more information, see General Fan Performance Notes.
Boldface indicates field–supplied drive is required.

Standard Static 770–1175 RPM, 1.2 BHP max
Medium Static 1035–1466 RPM, 2.4 BHP max
High Static 1303–1687 RPM, 2.9 BHP max

Table 48 – 50HC06** 1 PHASE HUMIDI-MIZER 5 TON HORIZONTAL SUPPLY

CFM	Available External Static Pressure (in. wg)									
	0.2		0.4		0.6		0.8		1.0	
	RPM	BHP	RPM	BHP	RPM	BHP	RPM	BHP	RPM	BHP
1500	725	0.33	840	0.46	937	0.60	1023	0.75	1101	0.90
1625	765	0.40	876	0.54	970	0.68	1054	0.84	1131	1.00
1750	806	0.48	912	0.63	1004	0.78	1087	0.94	1162	1.11
1875	847	0.57	950	0.72	1039	0.88	1120	1.05	1194	1.23
2000	889	0.66	988	0.83	1075	1.00	1154	1.18	1226	1.36
2125	931	0.78	1027	0.95	1112	1.13	1189	1.31	1260	1.50
2250	974	0.90	1067	1.08	1149	1.27	1224	1.46	1294	1.66
2375	1018	1.03	1107	1.23	1187	1.43	1261	1.63	**1329**	**1.84**
2500	1061	1.19	1148	1.39	1226	1.59	**1297**	**1.81**	**1364**	**2.02**

CFM	Available External Static Pressure (in. wg)									
	1.2		1.4		1.6		1.8		2.0	
	RPM	BHP	RPM	BHP	RPM	BHP	RPM	BHP	RPM	BHP
1500	1172	1.06	1239	1.23	1302	1.40	1361	1.58	1418	1.77
1625	1201	1.16	1267	1.34	1329	1.52	1388	1.71	**1444**	**1.90**
1750	1231	1.28	1296	1.46	1358	1.65	**1416**	**1.84**	**1472**	**2.04**
1875	1262	1.41	1326	1.60	**1387**	**1.79**	**1445**	**1.99**	**1499**	**2.20**
2000	1294	1.55	1357	1.74	**1417**	**1.95**	**1474**	**2.15**	**1528**	**2.36**
2125	1326	1.70	**1388**	**1.90**	**1447**	**2.11**	**1504**	**2.33**	**1557**	**2.55**
2250	**1359**	**1.87**	**1420**	**2.08**	**1479**	**2.29**	**1534**	**2.51**	**1587**	**2.74**
2375	**1393**	**2.05**	**1453**	**2.27**	**1511**	**2.49**	**1566**	**2.72**	**1618**	**2.95**
2500	**1427**	**2.24**	**1487**	**2.47**	**1543**	**2.70**	**1597**	**2.94**	**1649**	**3.18**

NOTE: For more information, see General Fan Performance Notes.
Boldface indicates field–supplied drive is required.

Standard Static 770 – 1175 RPM 1.2 BHP max
Medium Static 1035–1466 1.5 BHP max

FAN PERFORMANCE (BELT DRIVE) (cont.)

Table 49 – 50HC06** **3 PHASE NON-HUMIDI-MIZER** **5 TON HORIZONTAL SUPPLY**

CFM	Available External Static Pressure (in. wg)									
	0.2		0.4		0.6		0.8		1.0	
	RPM	BHP	RPM	BHP	RPM	BHP	RPM	BHP	RPM	BHP
1500	**725**	**0.33**	**840**	**0.46**	937	0.60	1023	0.75	1101	0.90
1625	**765**	**0.40**	**876**	**0.54**	970	0.68	1054	0.84	1131	1.00
1750	**806**	**0.48**	**912**	**0.63**	1004	0.78	1087	0.94	1162	1.11
1875	**847**	**0.57**	**950**	**0.72**	1039	0.88	1120	1.05	1194	1.23
2000	**889**	**0.66**	**988**	**0.83**	1075	1.00	1154	1.18	1226	1.36
2125	**931**	**0.78**	**1027**	**0.95**	1112	1.13	1189	1.31	1260	1.50
2250	**974**	**0.90**	1067	1.08	1149	1.27	1224	1.46	1294	1.66
2375	**1018**	**1.03**	1107	1.23	1187	1.43	1261	1.63	1329	1.84
2500	1061	1.19	1148	1.39	1226	1.59	1297	1.81	1364	2.02

CFM	Available External Static Pressure (in. wg)									
	1.2		1.4		1.6		1.8		2.0	
	RPM	BHP	RPM	BHP	RPM	BHP	RPM	BHP	RPM	BHP
1500	1172	1.06	1239	1.23	1302	1.40	1361	1.58	1418	1.77
1625	1201	1.16	1267	1.34	1329	1.52	1388	1.71	1444	1.90
1750	1231	1.28	1296	1.46	1358	1.65	1416	1.84	1472	2.04
1875	1262	1.41	1326	1.60	1387	1.79	1445	1.99	1499	2.20
2000	1294	1.55	1357	1.74	1417	1.95	1474	2.15	1528	2.36
2125	1326	1.70	1388	1.90	1447	2.11	1504	2.33	1557	2.55
2250	1359	1.87	1420	2.08	1479	2.29	1534	2.51	1587	2.74
2375	1393	2.05	1453	2.27	1511	2.49	1566	2.72	**1618**	**2.95**
2500	1427	2.24	1487	2.47	1543	2.70	**1597**	**2.94**	**1649**	**3.18**

NOTE: For more information, see General Fan Performance Notes.
Boldface indicates field–supplied drive is required.

Medium Static 1035 – 1466 RPM, 2.4 BHP max
High Static 1303 – 1687 RPM, 2.9 BHP max

Table 50 – 50HC06** **3 PHASE HUMIDI-MIZER** **5 TON HORIZONTAL SUPPLY**

CFM	Available External Static Pressure (in. wg)									
	0.2		0.4		0.6		0.8		1.0	
	RPM	BHP	RPM	BHP	RPM	BHP	RPM	BHP	RPM	BHP
1500	725	0.33	840	0.46	937	0.60	1023	0.75	1101	0.90
1625	765	0.40	876	0.54	970	0.68	1054	0.84	1131	1.00
1750	806	0.48	912	0.63	1004	0.78	1087	0.94	1162	1.11
1875	847	0.57	950	0.72	1039	0.88	1120	1.05	1194	1.23
2000	889	0.66	988	0.83	1075	1.00	1154	1.18	1226	1.36
2125	931	0.78	1027	0.95	1112	1.13	1189	1.31	1260	1.50
2250	974	0.90	1067	1.08	1149	1.27	1224	1.46	1294	1.66
2375	1018	1.03	1107	1.23	1187	1.43	1261	1.63	1329	1.84
2500	1061	1.19	1148	1.39	1226	1.59	1297	1.81	1364	2.02

CFM	Available External Static Pressure (in. wg)									
	1.2		1.4		1.6		1.8		2.0	
	RPM	BHP	RPM	BHP	RPM	BHP	RPM	BHP	RPM	BHP
1500	1172	1.06	1239	1.23	1302	1.40	1361	1.58	1418	1.77
1625	1201	1.16	1267	1.34	1329	1.52	1388	1.71	1444	1.90
1750	1231	1.28	1296	1.46	1358	1.65	1416	1.84	1472	2.04
1875	1262	1.41	1326	1.60	1387	1.79	1445	1.99	1499	2.20
2000	1294	1.55	1357	1.74	1417	1.95	1474	2.15	1528	2.36
2125	1326	1.70	1388	1.90	1447	2.11	1504	2.33	1557	2.55
2250	1359	1.87	1420	2.08	1479	2.29	1534	2.51	1587	2.74
2375	1393	2.05	1453	2.27	1511	2.49	1566	2.72	1618	2.95
2500	1427	2.24	1487	2.47	1543	2.70	1597	2.94	**1649**	**3.18**

NOTE: For more information, see General Fan Performance Notes.
Boldface indicates field–supplied drive is required.

Standard Static 770 – 1175 RPM 1.2 BHP max
Medium Static 1035–1466 2.4 BHP max
High Static 1303–1687 2.9 BHP max

FAN PERFORMANCE (BELT DRIVE) (cont.)

Table 51 – 50HC07** 3 PHASE 6 TON VERTICAL SUPPLY

CFM	Available External Static Pressure (in. wg)									
	0.2		0.4		0.6		0.8		1.0	
	RPM	BHP	RPM	BHP	RPM	BHP	RPM	BHP	RPM	BHP
1800	446	0.33	534	0.50	609	0.70	676	0.91	736	1.14
1950	467	0.39	552	0.57	625	0.77	690	0.99	750	1.23
2100	489	0.45	571	0.64	642	0.86	706	1.08	764	1.33
2250	511	0.53	591	0.73	660	0.95	722	1.19	779	1.44
2400	534	0.61	611	0.82	678	1.05	739	1.30	795	1.56
2550	558	0.71	631	0.93	697	1.17	756	1.42	811	1.69
2700	581	0.81	652	1.04	716	1.29	774	1.55	828	1.83
2850	605	0.93	674	1.17	736	1.43	792	1.70	845	1.98
3000	630	1.06	696	1.31	756	1.58	811	1.86	863	2.15

CFM	Available External Static Pressure (in. wg)									
	1.2		1.4		1.6		1.8		2.0	
	RPM	BHP	RPM	BHP	RPM	BHP	RPM	BHP	RPM	BHP
1800	791	1.39	843	1.65	892	1.93	938	2.22	981	2.53
1950	804	1.49	855	1.76	903	2.04	949	2.34	992	2.65
2100	818	1.59	868	1.87	915	2.16	961	2.46	1003	2.78
2250	832	1.71	882	1.99	928	2.29	973	2.59	1015	2.92
2400	847	1.83	896	2.12	942	2.43	986	2.74	1028	3.07
2550	862	1.97	910	2.27	956	2.58	999	2.90	1041	3.23
2700	878	2.12	926	2.42	971	2.74	1013	3.07	1055	3.41
2850	895	2.28	941	2.59	986	2.92	1028	3.25	1069	3.60
3000	912	2.46	958	2.78	1001	3.11	1043	3.45	1083	3.80

NOTE: For more information, see General Fan Performance Notes.

Standard static 489–747 RPM, 1.7 BHP max
Medium static 733–949 RPM, 2.9 BHP max
High static 909–1102 RPM, 4.7 BHP max

Table 52 – 50HC07** 3 PHASE 6 TON HORIZONTAL SUPPLY

CFM	Available External Static Pressure (in. wg)									
	0.2		0.4		0.6		0.8		1.0	
	RPM	BHP	RPM	BHP	RPM	BHP	RPM	BHP	RPM	BHP
1800	415	0.28	510	0.46	588	0.65	655	0.85	715	1.08
1950	431	0.32	525	0.51	601	0.71	668	0.93	727	1.16
2100	448	0.38	540	0.57	615	0.78	681	1.01	740	1.25
2250	465	0.43	555	0.64	629	0.86	694	1.10	753	1.34
2400	483	0.49	571	0.71	644	0.94	708	1.19	766	1.45
2550	501	0.56	587	0.79	659	1.04	722	1.29	779	1.56
2700	519	0.64	603	0.88	674	1.14	737	1.40	793	1.68
2850	538	0.72	620	0.98	689	1.24	751	1.52	807	1.80
3000	557	0.82	637	1.08	705	1.36	766	1.64	822	1.94

CFM	Available External Static Pressure (in. wg)									
	1.2		1.4		1.6		1.8		2.0	
	RPM	BHP	RPM	BHP	RPM	BHP	RPM	BHP	RPM	BHP
1800	770	1.31	821	1.56	868	1.82	913	2.09	955	2.36
1950	782	1.40	832	1.66	879	1.92	924	2.20	966	2.49
2100	794	1.50	844	1.76	891	2.03	935	2.32	977	2.61
2250	806	1.60	856	1.87	903	2.15	947	2.45	988	2.75
2400	819	1.71	868	1.99	915	2.28	958	2.58	1000	2.89
2550	832	1.83	881	2.12	927	2.42	971	2.73	1012	3.05
2700	845	1.96	894	2.26	940	2.57	983	2.88	1024	3.21
2850	859	2.10	907	2.41	953	2.72	995	3.05	1036	3.38
3000	873	2.24	921	2.56	966	2.89	1008	3.22	1049	3.56

NOTE: For more information, see General Fan Performance Notes.

Standard static 489–747 RPM, 1.7 BHP max
Medium static 733–949 RPM, 2.9 BHP max
High static 909–1102 RPM, 4.7 BHP max

FAN PERFORMANCE (BELT DRIVE) (cont.)

Table 53 – 50HC08** 3 PHASE 7.5 TON VERTICAL SUPPLY

CFM	Available External Static Pressure (in. wg)									
	0.2		0.4		0.6		0.8		1.0	
	RPM	BHP	RPM	BHP	RPM	BHP	RPM	BHP	RPM	BHP
2250	482	0.36	577	0.51	659	0.66	732	0.82	799	0.98
2438	505	0.43	597	0.59	676	0.75	748	0.92	813	1.09
2625	529	0.51	617	0.68	694	0.85	764	1.03	827	1.22
2813	554	0.60	638	0.78	713	0.97	781	1.16	843	1.35
3000	579	0.70	660	0.89	732	1.09	799	1.29	860	1.50
3188	604	0.81	683	1.02	753	1.23	817	1.44	877	1.65
3375	630	0.94	706	1.15	774	1.37	836	1.60	895	1.82
3563	657	1.08	729	1.31	795	1.54	856	1.77	913	2.01
3750	683	1.23	753	1.47	817	1.71	877	1.96	933	2.21

CFM	Available External Static Pressure (in. wg)									
	1.2		1.4		1.6		1.8		2.0	
	RPM	BHP	RPM	BHP	RPM	BHP	RPM	BHP	RPM	BHP
2250	860	1.14	917	1.31	971	1.48	1022	1.66	1071	1.84
2438	873	1.27	929	1.45	983	1.63	1033	1.81	1081	2.00
2625	887	1.40	942	1.59	995	1.78	1045	1.98	1092	2.18
2813	901	1.55	956	1.75	1008	1.95	1057	2.15	1104	2.36
3000	917	1.70	970	1.91	1021	2.13	1070	2.34	1117	2.56
3188	933	1.87	986	2.09	1036	2.32	1084	2.54	1130	2.77
3375	950	2.05	1002	2.29	1051	2.52	1098	2.76	1144	3.00
3563	967	2.25	1018	2.49	1067	2.74	1113	2.99	1158	3.24
3750	985	2.46	1035	2.71	1083	2.97	1129	3.23	1173	3.49

NOTE: For more information, see General Fan Performance Notes.

Standard static 518–733 RPM, 1.7 BHP max

Medium static 690–936 RPM, 2.4 BHP max

High static 838–1084 RPM, 3.7 BHP max

Table 54 – 50HC08** 3 PHASE 7.5 TON HORIZONTAL SUPPLY

CFM	Available External Static Pressure (in. wg)									
	0.2		0.4		0.6		0.8		1.0	
	RPM	BHP	RPM	BHP	RPM	BHP	RPM	BHP	RPM	BHP
2250	433	0.29	518	0.41	596	0.54	667	0.67	733	0.81
2438	454	0.35	535	0.48	609	0.61	677	0.75	741	0.90
2625	477	0.42	553	0.55	624	0.69	689	0.84	751	1.00
2813	500	0.49	572	0.64	640	0.78	703	0.94	763	1.10
3000	523	0.58	592	0.73	657	0.88	718	1.05	775	1.22
3188	547	0.68	613	0.83	675	1.00	733	1.17	789	1.34
3375	571	0.78	634	0.95	694	1.12	750	1.30	804	1.48
3563	596	0.90	656	1.07	713	1.25	768	1.44	820	1.63
3750	621	1.03	679	1.21	734	1.40	786	1.59	837	1.79

CFM	Available External Static Pressure (in. wg)									
	1.2		1.4		1.6		1.8		2.0	
	RPM	BHP	RPM	BHP	RPM	BHP	RPM	BHP	RPM	BHP
2250	795	0.96	854	1.11	910	1.27	963	1.43	1014	1.60
2438	802	1.05	859	1.21	913	1.38	966	1.55	1016	1.72
2625	810	1.16	865	1.32	919	1.49	970	1.67	1019	1.85
2813	819	1.27	874	1.44	925	1.62	975	1.80	1023	1.99
3000	830	1.39	883	1.57	934	1.76	982	1.95	1029	2.14
3188	843	1.53	894	1.71	943	1.90	990	2.10	1036	2.30
3375	856	1.67	905	1.86	953	2.06	1000	2.27	1045	2.48
3563	870	1.83	918	2.03	965	2.23	1010	2.44	1054	2.66
3750	885	1.99	932	2.20	978	2.42	1022	2.64	1065	2.86

NOTE: For more information, see General Fan Performance Notes.

Standard static 518–733 RPM, 1.7 BHP max

Medium static 690–936 RPM, 2.4 BHP max

High static 838–1084 RPM, 3.7 BHP max

FAN PERFORMANCE (BELT DRIVE) (cont.)

Table 55 – 50HC09** 3 PHASE 8.5 TON VERTICAL SUPPLY

CFM	Available External Static Pressure (in. wg)									
	0.2		0.4		0.6		0.8		1.0	
	RPM	BHP	RPM	BHP	RPM	BHP	RPM	BHP	RPM	BHP
2250	482	0.36	577	0.51	659	0.66	732	0.82	799	0.98
2438	505	0.43	597	0.59	676	0.75	748	0.92	813	1.09
2625	529	0.51	617	0.68	694	0.85	764	1.03	827	1.22
2813	554	0.60	638	0.78	713	0.97	781	1.16	843	1.35
3000	579	0.70	660	0.89	732	1.09	799	1.29	860	1.50
3188	604	0.81	683	1.02	753	1.23	817	1.44	877	1.65
3375	630	0.94	706	1.15	774	1.37	836	1.60	895	1.82
3563	657	1.08	729	1.31	795	1.54	856	1.77	913	2.01
3750	683	1.23	753	1.47	817	1.71	877	1.96	933	2.21

CFM	Available External Static Pressure (in. wg)									
	1.2		1.4		1.6		1.8		2.0	
	RPM	BHP	RPM	BHP	RPM	BHP	RPM	BHP	RPM	BHP
2250	860	1.14	917	1.31	971	1.48	1022	1.66	1071	1.84
2438	873	1.27	929	1.45	983	1.63	1033	1.81	1081	2.00
2625	887	1.40	942	1.59	995	1.78	1045	1.98	1092	2.18
2813	901	1.55	956	1.75	1008	1.95	1057	2.15	1104	2.36
3000	917	1.70	970	1.91	1021	2.13	1070	2.34	1117	2.56
3188	933	1.87	986	2.09	1036	2.32	1084	2.54	1130	2.77
3375	950	2.05	1002	2.29	1051	2.52	1098	2.76	1144	3.00
3563	967	2.25	1018	2.49	1067	2.74	1113	2.99	1158	3.24
3750	985	2.46	1035	2.71	1083	2.97	1129	3.23	1173	3.49

NOTE: For more information, see General Fan Performance Notes.

Standard static 518–733 RPM, 1.7 BHP max

Medium static 690–936 RPM, 2.4 BHP max

High static 838–1084 RPM, 3.7 BHP max

Table 56 – 50HC09** 3 PHASE 8.5 TON HORIZONTAL SUPPLY

CFM	Available External Static Pressure (in. wg)									
	0.2		0.4		0.6		0.8		1.0	
	RPM	BHP	RPM	BHP	RPM	BHP	RPM	BHP	RPM	BHP
2250	433	0.29	518	0.41	596	0.54	667	0.67	733	0.81
2438	454	0.35	535	0.48	609	0.61	677	0.75	741	0.90
2625	477	0.42	553	0.55	624	0.69	689	0.84	751	1.00
2813	500	0.49	572	0.64	640	0.78	703	0.94	763	1.10
3000	523	0.58	592	0.73	657	0.88	718	1.05	775	1.22
3188	547	0.68	613	0.83	675	1.00	733	1.17	789	1.34
3375	571	0.78	634	0.95	694	1.12	750	1.30	804	1.48
3563	596	0.90	656	1.07	713	1.25	768	1.44	820	1.63
3750	621	1.03	679	1.21	734	1.40	786	1.59	837	1.79

CFM	Available External Static Pressure (in. wg)									
	1.2		1.4		1.6		1.8		2.0	
	RPM	BHP	RPM	BHP	RPM	BHP	RPM	BHP	RPM	BHP
2250	795	0.96	854	1.11	910	1.27	963	1.43	1014	1.60
2438	802	1.05	859	1.21	913	1.38	966	1.55	1016	1.72
2625	810	1.16	865	1.32	919	1.49	970	1.67	1019	1.85
2813	819	1.27	874	1.44	925	1.62	975	1.80	1023	1.99
3000	830	1.39	883	1.57	934	1.76	982	1.95	1029	2.14
3188	843	1.53	894	1.71	943	1.90	990	2.10	1036	2.30
3375	856	1.67	905	1.86	953	2.06	1000	2.27	1045	2.48
3563	870	1.83	918	2.03	965	2.23	1010	2.44	1054	2.66
3750	885	1.99	932	2.20	978	2.42	1022	2.64	1065	2.86

NOTE: For more information, see General Fan Performance Notes.

Standard static 518–733 RPM, 1.7 BHP max

Medium static 690–936 RPM, 2.4 BHP max

High static 838–1084 RPM, 3.7 BHP max

FAN PERFORMANCE (BELT DRIVE) (cont.)

Table 57 – 50HC12** 3 PHASE 10 TON VERTICAL SUPPLY

CFM	Available External Static Pressure (in. wg)									
	0.2		0.4		0.6		0.8		1.0	
	RPM	BHP	RPM	BHP	RPM	BHP	RPM	BHP	RPM	BHP
3000	556	0.65	623	0.80	684	0.95	738	1.11	789	1.26
3250	590	0.79	655	0.96	713	1.13	766	1.29	815	1.46
3500	625	0.96	687	1.14	742	1.32	794	1.50	841	1.68
3750	661	1.16	719	1.35	773	1.54	822	1.73	869	1.93
4000	697	1.37	753	1.58	804	1.79	852	1.99	897	2.20
4250	733	1.62	787	1.84	836	2.06	883	2.28	926	2.49
4500	770	1.89	821	2.13	869	2.36	914	2.59	956	2.82
4750	807	2.20	856	2.45	902	2.69	945	2.94	986	3.18
5000	844	2.54	891	2.80	936	3.06	978	3.31	1018	3.57

CFM	Available External Static Pressure (in. wg)									
	1.2		1.4		1.6		1.8		2.0	
	RPM	BHP	RPM	BHP	RPM	BHP	RPM	BHP	RPM	BHP
3000	836	1.42	881	1.57	923	1.73	963	1.89	1001	2.05
3250	861	1.63	904	1.79	945	1.96	985	2.13	1023	2.30
3500	886	1.86	929	2.04	969	2.22	1008	2.40	1045	2.58
3750	912	2.12	954	2.31	994	2.50	1031	2.70	1068	2.89
4000	940	2.40	980	2.61	1019	2.81	1056	3.02	1092	3.22
4250	968	2.71	1007	2.93	1045	3.15	1081	3.36	1117	3.58
4500	996	3.05	1035	3.28	1072	3.51	1108	3.74	1142	3.97
4750	1026	3.42	1063	3.66	1100	3.91	1135	4.15	1168	4.39
5000	1056	3.82	1093	4.08	1128	4.34	1162	4.59	–	–

NOTE: For more information, see General Fan Performance Notes.

Standard static 591 – 838 RPM, 2.4 BHP max
Medium static 838 – 1084 RPM, 3.7 BHP max
High static 1022 – 1240 RPM, 4.9 BHP max

Table 58 – 50HC12** 3 PHASE 10 TON HORIZONTAL SUPPLY

CFM	Available External Static Pressure (in. wg)									
	0.2		0.4		0.6		0.8		1.0	
	RPM	BHP	RPM	BHP	RPM	BHP	RPM	BHP	RPM	BHP
3000	523	0.58	592	0.73	657	0.88	718	1.05	775	1.22
3250	555	0.71	620	0.87	681	1.04	739	1.21	794	1.39
3500	588	0.86	649	1.03	707	1.21	762	1.39	815	1.58
3750	621	1.03	679	1.21	734	1.40	786	1.59	837	1.79
4000	655	1.23	709	1.42	761	1.61	812	1.82	860	2.03
4250	689	1.45	741	1.65	790	1.86	838	2.07	885	2.29
4500	723	1.69	773	1.90	820	2.12	866	2.35	910	2.57
4750	758	1.96	805	2.19	850	2.42	894	2.65	937	2.89
5000	793	2.26	838	2.50	881	2.74	923	2.98	965	3.23

CFM	Available External Static Pressure (in. wg)									
	1.2		1.4		1.6		1.8		2.0	
	RPM	BHP	RPM	BHP	RPM	BHP	RPM	BHP	RPM	BHP
3000	830	1.39	883	1.57	934	1.76	982	1.95	1029	2.14
3250	847	1.57	897	1.76	946	1.96	993	2.16	1039	2.36
3500	865	1.77	914	1.97	961	2.18	1007	2.38	1051	2.60
3750	885	1.99	932	2.20	978	2.42	1022	2.64	1065	2.86
4000	907	2.24	952	2.46	996	2.68	1038	2.91	1080	3.14
4250	930	2.51	973	2.74	1015	2.97	1057	3.21	1097	3.45
4500	954	2.81	996	3.05	1037	3.29	1076	3.54	1115	3.79
4750	979	3.13	1019	3.38	1059	3.63	1097	3.89	1135	4.15
5000	1005	3.49	1044	3.74	1082	4.01	1119	4.27	1156	4.55

NOTE: For more information, see General Fan Performance Notes.

Standard static 591 – 838 RPM, 2.4 BHP max
Medium static 838 – 1084 RPM, 3.7 BHP max
High static 1022 – 1240 RPM, 4.9 BHP max

FAN PERFORMANCE (BELT DRIVE) (cont.)

Table 59 – 50HC14** 3 PHASE 12.5 TON VERTICAL SUPPLY

CFM	Available External Static Pressure (in. wg)									
	0.2		0.4		0.6		0.8		1.0	
	RPM	BHP	RPM	BHP	RPM	BHP	RPM	BHP	RPM	BHP
3438	383	0.46	458	0.66	530	0.91	601	1.20	668	1.53
3750	402	0.56	474	0.77	540	1.01	605	1.30	670	1.64
4063	422	0.67	491	0.90	552	1.14	613	1.43	674	1.76
4375	443	0.79	508	1.04	567	1.29	623	1.58	680	1.90
4688	464	0.93	527	1.19	583	1.46	636	1.75	689	2.07
5000	486	1.10	546	1.37	600	1.65	651	1.95	700	2.27
5313	509	1.28	565	1.56	618	1.86	666	2.17	713	2.49
5625	533	1.48	585	1.77	636	2.09	683	2.41	728	2.74
5938	557	1.71	605	2.01	655	2.34	701	2.67	744	3.02
6250	581	1.97	626	2.26	673	2.61	718	2.96	760	3.32

CFM	Available External Static Pressure (in. wg)									
	1.2		1.4		1.6		1.8		2.0	
	RPM	BHP	RPM	BHP	RPM	BHP	RPM	BHP	RPM	BHP
3438	729	1.88	783	2.25	833	2.62	879	2.99	921	3.37
3750	731	2.00	787	2.39	838	2.78	885	3.18	929	3.59
4063	733	2.13	789	2.52	841	2.94	890	3.36	935	3.79
4375	736	2.27	791	2.67	843	3.10	892	3.54	938	3.99
4688	741	2.43	794	2.83	845	3.26	894	3.72	941	4.19
5000	749	2.63	799	3.02	848	3.45	896	3.90	942	4.39
5313	760	2.85	806	3.23	853	3.66	899	4.11	944	4.60
5625	772	3.10	816	3.48	860	3.90	904	4.35	947	4.83
5938	786	3.38	827	3.76	869	4.18	911	4.62	952	5.09
6250	801	3.69	841	4.07	880	4.49	920	4.93	959	5.40

NOTE: For more information, see General Fan Performance Notes.

Standard static 440–609 RPM, 2.9 BHP max
Medium static 609–778 RPM, 3.7 BHP max
High static 776–955 RPM, 6.1 BHP max

Table 60 – 50HC14** 3 PHASE 12.5 TON HORIZONTAL SUPPLY

CFM	Available External Static Pressure (in. wg)									
	0.2		0.4		0.6		0.8		1.0	
	RPM	BHP	RPM	BHP	RPM	BHP	RPM	BHP	RPM	BHP
3438	379	0.48	455	0.69	526	0.94	593	1.23	655	1.54
3750	399	0.59	469	0.80	536	1.06	600	1.35	660	1.67
4063	420	0.71	486	0.93	549	1.19	609	1.49	667	1.81
4375	442	0.84	503	1.08	562	1.35	620	1.65	675	1.97
4688	464	1.00	522	1.25	578	1.52	632	1.83	685	2.16
5000	486	1.17	541	1.44	594	1.72	646	2.03	696	2.37
5313	509	1.37	561	1.64	612	1.94	661	2.26	708	2.60
5625	532	1.58	582	1.87	630	2.18	677	2.51	722	2.86
5938	555	1.82	603	2.13	649	2.45	694	2.78	737	3.14
6250	578	2.09	625	2.41	669	2.74	711	3.09	753	3.45

CFM	Available External Static Pressure (in. wg)									
	1.2		1.4		1.6		1.8		2.0	
	RPM	BHP	RPM	BHP	RPM	BHP	RPM	BHP	RPM	BHP
3438	713	1.89	766	2.25	816	2.64	863	3.04	907	3.46
3750	717	2.02	770	2.39	820	2.79	867	3.20	911	3.63
4063	722	2.17	774	2.55	824	2.95	870	3.37	914	3.81
4375	728	2.33	779	2.72	828	3.13	874	3.56	918	4.00
4688	736	2.52	785	2.91	832	3.32	878	3.76	922	4.21
5000	745	2.73	792	3.12	838	3.54	883	3.98	926	4.44
5313	755	2.97	801	3.36	846	3.78	889	4.23	931	4.69
5625	767	3.23	811	3.63	854	4.05	896	4.50	937	4.97
5938	780	3.52	822	3.92	864	4.35	904	4.80	944	5.27
6250	794	3.84	835	4.25	875	4.68	914	5.13	952	5.61

NOTE: For more information, see General Fan Performance Notes.

Standard static 440–609 RPM, 2.9 BHP max
Medium static 609–778 RPM, 3.7 BHP max
High static 776–955 RPM, 6.1 BHP max

FAN PERFORMANCE (cont.)
X13 MULTI SPEED/TORQUE MOTOR

Table 61 – 50HC*A04 Horizontal Unit-Direct Drive

Speed (Torque) Tap	CFM	ESP	BHP
1	900	0.47	0.21
	975	0.38	0.20
	1050	0.29	0.19
	1125	0.21	0.18
	1200	0.13	0.18
	1275	0.06	0.20
	1350	–	–
	1425	–	–
	1500	–	–
2	900	0.65	0.27
	975	0.54	0.26
	1050	0.44	0.25
	1125	0.33	0.24
	1200	0.23	0.23
	1275	0.13	0.21
	1350	0.02	0.20
	1425	–	–
	1500	–	–
3	900	0.96	0.38
	975	0.84	0.37
	1050	0.73	0.36
	1125	0.61	0.34
	1200	0.50	0.33
	1275	0.38	0.31
	1350	0.26	0.30
	1425	0.15	0.28
	1500	0.04	0.26
4	900	1.17	0.46
	975	1.08	0.46
	1050	0.98	0.46
	1125	0.87	0.45
	1200	0.75	0.44
	1275	0.63	0.42
	1350	0.51	0.40
	1425	0.39	0.39
	1500	0.27	0.37
5	900	1.35	0.52
	975	1.30	0.54
	1050	1.26	0.57
	1125	1.21	0.59
	1200	1.16	0.62
	1275	1.12	0.64
	1350	1.07	0.67
	1425	1.02	0.70
	1500	0.97	0.73

Table 62 – 50HC*A04 Vertical Unit-Direct Drive

Speed (Torque) Tap	CFM	ESP	BHP
1	900	0.36	0.16
	975	0.27	0.16
	1050	0.18	0.15
	1125	0.10	0.15
	1200	0.04	0.16
	1275	–	–
	1350	–	–
	1425	–	–
	1500	–	–
2	900	0.51	0.21
	975	0.40	0.20
	1050	0.30	0.19
	1125	0.21	0.18
	1200	0.11	0.17
	1275	0.02	0.16
	1350	–	–
	1425	–	–
	1500	–	–
3	900	0.84	0.33
	975	0.72	0.32
	1050	0.60	0.31
	1125	0.49	0.29
	1200	0.38	0.28
	1275	0.28	0.26
	1350	0.17	0.25
	1425	0.07	0.24
	1500	–	–
4	900	1.06	0.41
	975	0.96	0.41
	1050	0.86	0.41
	1125	0.74	0.40
	1200	0.63	0.38
	1275	0.50	0.37
	1350	0.38	0.35
	1425	0.26	0.34
	1500	0.15	0.32
5	900	1.24	0.51
	975	1.19	0.52
	1050	1.14	0.54
	1125	1.08	0.57
	1200	1.03	0.59
	1275	0.98	0.61
	1350	0.93	0.64
	1425	0.88	0.67
	1500	0.82	0.69

FAN PERFORMANCE (cont.)
X13 MULTI SPEED/TORQUE MOTOR

Table 63 – 50HC*A05 Horizontal Unit-Direct Drive

Speed (Torque) Tap	CFM	ESP	BHP
1	1200	0.62	0.34
	1300	0.48	0.32
	1400	0.35	0.30
	1500	0.23	0.28
	1600	0.12	0.28
	1700	0.02	0.27
	1800	–	–
	1900	–	–
	2000	–	–
2	1200	0.74	0.39
	1300	0.60	0.37
	1400	0.46	0.35
	1500	0.32	0.32
	1600	0.19	0.30
	1700	0.07	0.27
	1800	–	–
	1900	–	–
	2000	–	–
3	1200	1.20	0.59
	1300	1.12	0.60
	1400	1.01	0.61
	1500	0.89	0.62
	1600	0.76	0.59
	1700	0.61	0.56
	1800	0.47	0.53
	1900	0.32	0.50
	2000	0.18	0.47
4	1200	1.24	0.60
	1300	1.18	0.63
	1400	1.11	0.65
	1500	1.03	0.69
	1600	0.93	0.69
	1700	0.82	0.69
	1800	0.70	0.69
	1900	0.56	0.66
	2000	0.41	0.63
5	1200	1.25	0.61
	1300	1.20	0.65
	1400	1.11	0.68
	1500	1.03	0.68
	1600	1.05	0.76
	1700	1.01	0.76
	1800	0.96	0.84
	1900	0.91	0.89
	2000	0.87	0.93

Table 64 – 50HC*A05 Vertical Unit-Direct Drive

Speed (Torque) Tap	CFM	ESP	BHP
1	1200	0.57	0.31
	1300	0.44	0.29
	1400	0.30	0.27
	1500	0.16	0.25
	1600	0.03	0.25
	1700	–	–
	1800	–	–
	1900	–	–
	2000	–	–
2	1200	0.68	0.35
	1300	0.54	0.33
	1400	0.40	0.31
	1500	0.24	0.28
	1600	0.10	0.26
	1700	–	–
	1800	–	–
	1900	–	–
	2000	–	–
3	1200	1.15	0.54
	1300	1.09	0.54
	1400	1.02	0.55
	1500	0.93	0.58
	1600	0.82	0.57
	1700	0.69	0.55
	1800	0.54	0.52
	1900	0.38	0.50
	2000	0.21	0.47
4	1200	1.16	0.56
	1300	1.12	0.59
	1400	1.07	0.61
	1500	1.00	0.65
	1600	0.92	0.65
	1700	0.80	0.66
	1800	0.67	0.65
	1900	0.51	0.62
	2000	0.34	0.59
5	1200	1.16	0.59
	1300	1.11	0.63
	1400	1.00	0.67
	1500	0.88	0.67
	1600	0.96	0.75
	1700	0.91	0.75
	1800	0.86	0.83
	1900	0.80	0.87
	2000	0.74	0.91

FAN PERFORMANCE (cont.)
X13 MULTI SPEED/TORQUE MOTOR

Table 65 – 50HC*A06 Horizontal Unit-Direct Drive

Speed (Torque) tap	CFM	ESP	BHP
1	1500	0.63	0.49
	1625	0.45	0.46
	1750	0.27	0.43
	1875	0.10	0.39
	2000	–	–
	2125	–	–
	2250	–	–
	2375	–	–
	2500	–	–
2	1500	0.88	0.61
	1625	0.69	0.58
	1750	0.49	0.55
	1875	0.30	0.51
	2000	0.12	0.48
	2125	–	–
	2250	–	–
	2375	–	–
	2500	–	–
3	1500	1.37	0.89
	1625	1.20	0.87
	1750	1.02	0.86
	1875	0.81	0.83
	2000	0.60	0.79
	2125	0.39	0.75
	2250	0.21	0.71
	2375	0.07	0.67
	2500	–	–
4	1500	1.48	0.95
	1625	1.35	0.95
	1750	1.20	0.99
	1875	1.03	0.99
	2000	0.83	0.96
	2125	0.63	0.93
	2250	0.42	0.89
	2375	0.22	0.84
	2500	0.05	0.78
5	1500	1.52	0.97
	1625	1.42	1.01
	1750	1.20	1.05
	1875	1.03	1.09
	2000	1.00	1.09
	2125	0.82	1.06
	2250	0.62	1.02
	2375	0.40	0.98
	2500	0.16	0.93

Table 66 – 50HC*A06 Vertical Unit-Direct Drive

Speed (Torque) tap	CFM	ESP	BHP
1	1500	0.50	0.44
	1625	0.32	0.42
	1750	0.14	0.39
	1875	–	–
	2000	–	–
	2125	–	–
	2250	–	–
	2375	–	–
	2500	–	–
2	1500	0.72	0.56
	1625	0.53	0.53
	1750	0.34	0.50
	1875	0.18	0.48
	2000	–	–
	2125	–	–
	2250	–	–
	2375	–	–
	2500	–	–
3	1500	1.20	0.84
	1625	1.02	0.82
	1750	0.82	0.82
	1875	0.61	0.79
	2000	0.40	0.75
	2125	0.20	0.71
	2250	0.04	0.67
	2375	–	–
	2500	–	–
4	1500	1.31	0.92
	1625	1.17	0.92
	1750	0.99	0.95
	1875	0.80	0.94
	2000	0.59	0.90
	2125	0.37	0.86
	2250	0.17	0.83
	2375	0.00	0.79
	2500	–	–
5	1500	1.36	0.94
	1625	1.24	0.99
	1750	0.99	1.02
	1875	0.80	1.05
	2000	0.74	1.03
	2125	0.53	0.99
	2250	0.31	0.94
	2375	0.08	0.90
	2500	–	0.86

Table 67 – PULLEY ADJUSTMENT

UNIT		Motor/Drive Combo	Motor Pulley turns open										
			0	0.5	1	1.5	2	2.5	3	3.5	4	4.5	5
04	1 Phase	Standard Static	854	825	795	766	736	707	678	648	619	589	560
		Medium Static	1175	1135	1094	1054	1013	973	932	892	851	811	770
	3 Phase	Standard Static*	854	825	795	766	736	707	678	648	619	589	560
		Medium Static	1175	1135	1094	1054	1013	973	932	892	851	811	770
		High Static	1466	1423	1380	1337	1294	1251	1207	1164	1121	1078	1035
05	1 Phase	Standard Static	854	825	795	766	736	707	678	648	619	589	560
		Medium Static	1175	1135	1094	1054	1013	973	932	892	851	811	770
	3 Phase	Standard Static*	854	825	795	766	736	707	678	648	619	589	560
		Medium Static*	1175	1135	1094	1054	1013	973	932	892	851	811	770
		Medium Static	1303	1265	1226	1188	1150	1112	1073	1035	997	958	920
		High Static	1639	1596	1553	1510	1467	1424	1380	1337	1294	1251	1208
06	1 Phase	Standard Static	1175	1135	1094	1054	1013	973	932	892	851	811	770
		Medium Static	1466	1423	1380	1337	1294	1251	1207	1164	1121	1078	1035
	3 Phase	Standard Static*	1175	1135	1094	1054	1013	973	932	892	851	811	770
		Medium Static*	1466	1423	1380	1337	1294	1251	1207	1164	1121	1078	1035
		High Static	1687	1649	1610	1572	1533	1495	1457	1418	1380	1341	1303
07	3 Phase	Standard Static	747	721	695	670	644	618	592	566	541	515	489
		Medium Static	949	927	906	884	863	841	819	798	776	755	733
		High Static	1102	1083	1063	1044	1025	1006	986	967	948	928	909
08	3 Phase	Standard Static	733	712	690	669	647	626	604	583	561	540	518
		Medium Static	936	911	887	862	838	813	788	764	739	715	690
		High Static	1084	1059	1035	1010	986	961	936	912	887	863	838
09	3 Phase	Standard Static	733	712	690	669	647	626	604	583	561	540	518
		Medium Static	936	911	887	862	838	813	788	764	739	715	690
		High Static	1084	1059	1035	1010	986	961	936	912	887	863	838
12	3 Phase	Standard Static	838	813	789	764	739	715	690	665	640	616	591
		Medium Static	1084	1059	1035	1010	986	961	936	912	887	863	838
		High Static	1240	1218	1196	1175	1153	1131	1109	1087	1066	1044	1022
14	3 Phase	Standard Static	609	592	575	558	541	525	508	491	474	457	440
		Medium Static	778	761	744	727	710	694	677	660	643	626	609
		High Static	955	973	951	929	907	886	864	842	820	798	776

– Factory settings

* Humidi–Mizer models only

Table 68 – 50HC04** 1-STAGE COOLING 3 TONS

V–Ph–Hz	VOLTAGE RANGE		COMP (ea)		OFM (ea)		IFM		
	MIN	MAX	RLA	LRA	WATTS	FLA	TYPE	EFF at Full Load	FLA
208–1–60	187	253	16.6	79	190	1.0	DD–STD	84%	7.4
							BD–STD	70%	4.9
							MED	70%	4.9
230–1–60	187	253	16.6	79	190	1.0	DD–STD	84%	7.4
							BD–STD	70%	4.9
							MED	70%	4.9
208–3–60	187	253	10.4	73	190	1.0	DD–STD	84%	7.4
							BD–STD	70%	4.9
							MED	70%	4.9
							HIGH	80%	5.2
230–3–60	187	253	10.4	73	190	1.0	DD–STD	84%	7.4
							BD–STD	70%	4.9
							MED	70%	4.9
							HIGH	80%	5.2
460–3–60	414	506	5.8	38	190	0.5	DD–STD	84%	4.0
							BD–STD	70%	2.1
							MED	70%	2.1
							HIGH	80%	2.6
575–3–60	518	633	3.8	37	190	0.5	DD–STD	84%	4.0
							BD–STD	71%	1.9
							MED	71%	1.9
							HIGH	80%	2.0

Table 69 – 50HC05** 1-STAGE COOLING 4 TONS

V–Ph–Hz	VOLTAGE RANGE		COMP (ea)		OFM (ea)		IFM		
	MIN	MAX	RLA	LRA	WATTS	FLA	TYPE	EFF at Full Load	FLA
208–1–60	187	253	21.8	117	325	1.4	DD–STD	84%	7.4
							BD–STD	70%	4.9
							MED	70%	4.9
230–1–60	187	253	21.8	117	325	1.4	DD–STD	84%	7.4
							BD–STD	70%	4.9
							MED	70%	4.9
208–3–60	187	253	13.7	83	325	1.4	DD–STD	84%	7.4
							BD–STD	70%	4.9
							MED	70%	4.9
							HIGH	80%	5.2
230–3–60	187	253	13.7	83	325	1.4	DD–STD	84%	7.4
							BD–STD	70%	4.9
							MED	70%	4.9
							HIGH	80%	5.2
460–3–60	414	506	6.2	41	325	0.9	DD–STD	84%	4.0
							BD–STD	70%	2.1
							MED	70%	2.1
							HIGH	80%	2.6
575–3–60	518	633	4.8	37	325	0.9	DD–STD	84%	4.0
							BD–STD	71%	1.9
							MED	71%	1.9
							HIGH	80%	2.0

Table 70 – 50HC06** — **1-STAGE COOLING** — **5 TONS**

V–Ph–Hz	VOLTAGE RANGE		COMP (ea)		OFM (ea)		IFM		
	MIN	MAX	RLA	LRA	WATTS	FLA	TYPE	EFF at Full Load	FLA
208–1–60	187	253	25.0	134	325	1.4	DD–STD	84%	7.4
							BD–STD	70%	4.9
							MED	70%	7.0
230–1–60	187	253	25.0	134	325	1.4	DD–STD	84%	7.4
							BD–STD	70%	7.0
							MED	70%	4.9
208–3–60	187	253	15.9	110	325	1.4	DD–STD	84%	7.4
							BD–STD	70%	4.9
							MED	80%	5.2
							HIGH	81%	7.5
230–3–60	187	253	15.9	110	325	1.4	DD–STD	84%	7.4
							BD–STD	70%	4.9
							MED	80%	5.2
							HIGH	81%	7.5
460–3–60	414	506	7.0	52	325	0.9	DD–STD	84%	4.0
							BD–STD	70%	2.1
							MED	80%	2.6
							HIGH	81%	3.4
575–3–60	518	633	5.1	40	325	0.9	DD–STD	84%	4.0
							BD–STD	71%	1.9
							MED	81%	2.0
							HIGH	81%	2.8

Table 71 – 50HC07** — **1-STAGE COOLING** — **6 TONS**

V–Ph–Hz	VOLTAGE RANGE		COMP (ea)		OFM (ea)		IFM		
	MIN	MAX	RLA	LRA	WATTS	FLA	TYPE	EFF at Full Load	FLA
208–3–60	187	253	19.0	123	325	1.5	STD	80%	5.2
							MED	81%	7.5
							HIGH	81%	15.0
230–3–60	187	253	19.0	123	325	1.5	STD	80%	5.2
							MED	81%	7.5
							HIGH	81%	15.0
460–3–60	414	506	9.7	62	325	0.8	STD	80%	2.6
							MED	81%	3.4
							HIGH	81%	7.4
575–3–60	518	633	7.4	50	325	0.6	STD	80%	1.2
							MED	81%	2.8
							HIGH	81%	5.6

Table 72 – 50HC08** — **2-STAGE COOLING** — **7.5 TONS**

V–Ph–Hz	VOLTAGE RANGE		COMP (Cir 1)		COMP (Cir 2)		OFM (ea)		IFM		
	MIN	MAX	RLA	LRA	RLA	LRA	WATTS	FLA	TYPE	EFF at Full Load	FLA
208–3–60	187	253	13.6	83	13.6	83	325	1.5	STD	80%	5.2
									MED	80%	5.2
									HIGH	80%	10.0
230–3–60	187	253	13.6	83	13.6	83	325	1.5	STD	80%	5.2
									MED	80%	5.2
									HIGH	80%	10.0
460–3–60	414	506	6.1	41	6.1	41	325	0.8	STD	80%	2.6
									MED	80%	2.6
									HIGH	80%	4.4
575–3–60	518	633	4.2	33	4.2	33	325	0.6	STD	80%	1.2
									MED	80%	2.0
									HIGH	81%	2.8

Table 73 – 50HC09** 2-STAGE COOLING 8.5 TONS

V–Ph–Hz	VOLTAGE RANGE		COMP (Cir 1)		COMP (Cir 2)		OFM (ea)		IFM		
	MIN	MAX	RLA	LRA	RLA	LRA	WATTS	FLA	TYPE	EFF at Full Load	FLA
208–3–60	187	253	13.7	83	13.7	83	325	1.5	STD	80%	5.2
									MED	80%	5.2
									HIGH	80%	10.0
230–3–60	187	253	13.7	83	13.7	83	325	1.5	STD	80%	5.2
									MED	80%	5.2
									HIGH	80%	10.0
460–3–60	414	506	6.2	41	6.2	41	325	0.8	STD	80%	2.6
									MED	80%	2.6
									HIGH	80%	4.4
575–3–60	518	633	4.8	33	4.8	33	325	0.6	STD	80%	1.2
									MED	80%	2.0
									HIGH	81%	2.8

Table 74 – 50HC12** 2-STAGE COOLING 10 TONS

V–Ph–Hz	VOLTAGE RANGE		COMP (Cir 1)		COMP (Cir 2)		OFM (ea)		IFM	IFM	
	MIN	MAX	RLA	LRA	RLA	LRA	WATTS	FLA	TYPE	EFF at Full Load	FLA
208–3–60	187	253	15.9	110	15.9	110	1070	6.2	STD	80%	5.2
									MED	81%	10.0
									HIGH	81%	15.0
230–3–60	187	253	15.9	110	15.9	110	1070	6.2	STD	80%	5.2
									MED	81%	10.0
									HIGH	81%	15.0
460–3–60	414	506	7.7	52	7.7	52	1070	3.1	STD	80%	2.6
									MED	81%	4.4
									HIGH	81%	7.4
575–3–60	518	633	5.7	39	5.7	39	1070	2.5	STD	80%	2.0
									MED	81%	2.8
									HIGH	81%	5.6

Table 75 – 50HC14** 2-STAGE COOLING 12.5 TONS

V–Ph–Hz	VOLTAGE RANGE		COMP (Cir 1)		COMP (Cir 2)		OFM (ea)		IFM		
	MIN	MAX	RLA	LRA	RLA	LRA	WATTS	FLA	TYPE	EFF at Full Load	FLA
208–3–60	187	253	19.0	123	19.0	123	1288	1.5	STD	81%	7.5
									MED	81%	10.0
									HIGH	89.5%	20.4
230–3–60	187	253	19.0	123	19.0	123	1288	1.5	STD	81%	7.5
									MED	81%	10.0
									High	89.5%	20.4
460–3–60	414	506	9.7	62	9.7	62	1288	0.8	STD	81%	3.4
									MED	81%	4.4
									HIGH	89.5%	10.2
575–3–60	518	633	7.4	50	7.4	50	1288	0.7	STD	81%	2.8
									MED	81%	2.8
									HIGH	89.5%	9.0

Table 76 – MCA/MOCP DETERMINATION NO C.O. OR UNPWRD C.O. 3 TON

UNIT	V–Ph–Hz	IFM TYPE	ELEC. HTR		NO C.O. or UNPWR C.O.							
					NO P.E.				w/ P.E. (pwrd fr/unit)			
			Nom (kW)	FLA	MCA	MOCP	DISC. SIZE		MCA	MOCP	DISC. SIZE	
							FLA	LRA			FLA	LRA
04	208/230–1–60	DD–STD	–	–	29.2	45	29	88	31.1	45	31	90
			3.3/4.4	15.9/18.3	29.2/32.1	45/45	29/30	88/88	31.5/34.5	45/45	31/32	90/90
			4.9/6.5	23.5/27.1	38.6/43.1	45/45	36/40	88/88	41.0/45.5	45/50	38/42	90/90
			6.5/8.7	31.4/36.3	48.5/54.6	50/60	45/50	88/88	50.9/57.0	60/60	47/52	90/90
			7.9/10.5	37.9/43.8	56.6/64.0	60/70	52/59	88/88	59.0/66.4	60/70	54/61	90/90
			9.8/13.0	46.9/54.2	67.9/77.0	70/80	62/71	88/88	70.3/79.4	80/80	65/73	90/90
	208/230–3–60	DD–STD	–	–	21.4	30	22	82	23.3	30	24	84
			3.3/4.4	9.2/10.6	21.4/22.5	30/30	22/22	82/82	23.3/24.9	30/30	24/24	84/84
			4.9/6.5	13.6/15.6	26.3/28.8	30/30	24/26	82/82	28.6/31.1	30/35	26/29	84/84
			6.5/8.7	18.1/20.9	31.9/35.4	35/40	29/33	82/82	34.3/37.8	35/40	32/35	84/84
			7.9/10.5	21.9/25.3	36.6/40.9	40/45	34/38	82/82	39.0/43.3	40/45	36/40	84/84
			12.0/16.0	33.4/38.5	51.0/57.4	60/60	47/53	82/82	53.4/59.8	60/60	49/55	84/84
		BD–STD*	–	–	18.9	25	19	87	20.8	30	21	89
			3.3/4.4	9.2/10.6	18.9/19.4	25/25	19/19	87/87	20.8/21.8	30/30	21/21	89/89
			4.9/6.5	13.6/15.6	23.1/25.6	25/30	21/24	87/87	25.5/28.0	30/30	23/26	89/89
			6.5/8.7	18.1/20.9	28.8/32.3	30/35	26/30	87/87	31.1/34.6	35/35	29/32	89/89
			7.9/10.5	21.9/25.3	33.5/37.8	35/40	31/35	87/87	35.9/40.1	40/45	33/37	89/89
			12.0/16.0	33.4/38.5	47.9/54.3	50/60	44/50	87/87	50.3/56.6	60/60	46/52	89/89
		MED	–	–	18.9	25	19	87	20.8	30	21	89
			3.3/4.4	9.2/10.6	18.9/19.4	25/25	19/19	87/87	20.8/21.8	30/30	21/21	89/89
			4.9/6.5	13.6/15.6	23.1/25.6	25/30	21/24	87/87	25.5/28.0	30/30	23/26	89/89
			6.5/8.7	18.1/20.9	28.8/32.3	30/35	26/30	87/87	31.1/34.6	35/35	29/32	89/89
			7.9/10.5	21.9/25.3	33.5/37.8	35/40	31/35	87/87	35.9/40.1	40/45	33/37	89/89
			12.0/16.0	33.4/38.5	47.9/54.3	50/60	44/50	87/87	50.3/56.6	60/60	46/52	89/89
		HIGH	–	–	19.2	25	19	105	21.1	30	21	107
			3.3/4.4	9.2/10.6	19.2/19.8	25/25	19/19	105/105	21.1/22.1	30/30	21/21	107/107
			4.9/6.5	13.6/15.6	23.5/26.0	25/30	22/24	105/105	25.9/28.4	30/30	24/26	107/107
			6.5/8.7	18.1/20.9	29.1/32.6	30/35	27/30	105/105	31.5/35.0	35/40	29/32	107/107
			7.9/10.5	21.9/25.3	33.9/38.1	35/40	31/35	105/105	36.3/40.5	40/45	33/37	107/107
			12.0/16.0	33.4/38.5	48.3/54.6	50/60	44/50	105/105	50.6/57.0	60/60	47/52	107/107
	460–3–60	DD–STD	–	–	11.8	15	12	43	12.8	15	13	44
			6.0	7.2	14.0	15	13	43	15.3	20	14	44
			8.8	10.6	18.3	20	17	43	19.5	20	18	44
			11.5	13.8	22.3	25	20	43	23.5	25	22	44
			14.0	16.8	26.0	30	24	43	27.3	30	25	44
		BD–STD*	–	–	9.9	15	10	45	10.9	15	11	46
			6.0	7.2	11.6	15	11	45	12.9	15	12	46
			8.8	10.6	15.9	20	15	45	17.1	20	16	46
			11.5	13.8	19.9	20	18	45	21.1	25	19	46
			14.0	16.8	23.6	25	22	45	24.9	25	23	46
		MED	–	–	9.9	15	10	45	10.9	15	11	46
			6.0	7.2	11.6	15	11	45	12.9	15	12	46
			8.8	10.6	15.9	20	15	45	17.1	20	16	46
			11.5	13.8	19.9	20	18	45	21.1	25	19	46
			14.0	16.8	23.6	25	22	45	24.9	25	23	46
		HIGH	–	–	10.4	15	10	54	11.4	15	11	55
			6.0	7.2	12.3	15	11	54	13.5	15	12	55
			8.8	10.6	16.5	20	15	54	17.8	20	16	55
			11.5	13.8	20.5	25	19	54	21.8	25	20	55
			14.0	16.8	24.3	25	22	54	25.5	30	23	55
	575–3–60	DD–STD	–	–	9.3	15	10	42	11.2	15	12	44
		BD–STD*	–	–	7.2	15	7	43	9.1	15	9	45
		MED	–	–	7.2	15	7	43	9.1	15	9	45
		HIGH	–	–	7.3	15	7	49	9.2	15	9	51

* This drive package only available on Humidi–MiZer models.

See notes on page 79.

Table 77 – MCA/MOCP DETERMINATION NO C.O. OR UNPWRD C.O. **4 TON**

UNIT	V–Ph–Hz	IFM TYPE	ELEC. HTR		NO C.O. or UNPWR C.O.							
					NO P.E.				w/ P.E. (pwrd fr/unit)			
			Nom (kW)	FLA	MCA	MOCP	DISC. SIZE		MCA	MOCP	DISC. SIZE	
							FLA	LRA			FLA	LRA
A05	208/230–1–60	DD–STD	–	–	36.1	50	35	127	38.0	50	37	129
			3.3/4.4	15.9/18.3	36.1/36.1	50/50	35/35	127/127	38.0/38.0	50/50	37/37	129/129
			6.5/8.7	31.4/36.3	48.5/54.6	50/60	45/50	127/127	50.9/57.0	60/60	47/52	129/129
			9.8/13.0	46.9/54.2	67.9/77.0	70/80	62/71	127/127	70.3/79.4	80/80	65/73	129/129
			13.1/17.4	62.8/72.5	87.8/99.9	90/100	81/92	127/127	90.1/102.3	100/110	83/94	129/129
			15.8/21.0	75.8/87.5	104.0/118.6	110/125	96/109	127/127	106.4/121.0	110/125	98/111	129/129
	208/230–3–60	DD–STD	–	–	25.9	30	26	93	27.8	40	28	95
			4.9/6.5	13.6/15.6	26.3/28.8	30/30	26/26	93/93	28.6/31.1	40/40	28/29	95/95
			6.5/8.7	18.1/20.9	31.9/35.4	35/40	29/33	93/93	34.3/37.8	40/40	32/35	95/95
			12.0/16.0	33.4/38.5	51.0/57.4	60/60	47/53	93/93	53.4/59.8	60/60	49/55	95/95
			15.8/21.0	43.8/50.5	64.0/72.4	70/80	59/67	93/93	66.4/74.8	70/80	61/69	95/95
		BD–STD*	–	–	23.4	30	23	98	25.3	30	25	100
			4.9/6.5	13.6/15.6	23.4/25.6	30/30	23/24	98/98	25.5/28.0	30/30	25/26	100/100
			6.5/8.7	18.1/20.9	28.8/32.3	30/35	26/30	98/98	31.1/34.6	35/35	29/32	100/100
			12.0/16.0	33.4/38.5	47.9/54.3	50/60	44/50	98/98	50.3/56.6	60/60	46/52	100/100
			15.8/21.0	43.8/50.5	60.9/69.3	70/70	56/64	98/98	63.3/71.6	70/80	58/66	100/100
		MED	–	–	23.7	30	23	105	25.6	30	26	107
			4.9/6.5	13.6/15.6	23.7/26.0	30/30	23/24	105/105	25.9/28.4	30/30	26/26	107/107
			6.5/8.7	18.1/20.9	29.1/32.6	30/35	27/30	105/105	31.5/35.0	35/40	29/32	107/107
			12.0/16.0	33.4/38.5	48.3/54.6	50/60	44/50	105/105	50.6/57.0	60/60	47/52	107/107
			15.8/21.0	43.8/50.5	61.3/69.6	70/70	56/64	105/105	63.6/72.0	70/80	59/66	107/107
		HIGH	–	–	26.0	30	26	142	27.9	40	28	144
			4.9/6.5	13.6/15.6	26.4/28.9	30/30	26/27	142/142	28.8/31.3	40/40	28/29	144/144
			6.5/8.7	18.1/20.9	32.0/35.5	35/40	29/33	142/142	34.4/37.9	40/40	32/35	144/144
			12.0/16.0	33.4/38.5	51.1/57.5	60/60	47/53	142/142	53.5/59.9	60/60	49/55	144/144
			15.8/21.0	43.8/50.5	64.1/72.5	70/80	59/67	142/142	66.5/74.9	70/80	61/69	144/144
	460–3–60	DD–STD	–	–	12.7	15	13	47	13.7	20	14	48
			6.0	7.2	14.0	15	13	47	15.3	20	14	48
			11.5	13.8	22.3	25	20	47	23.5	25	22	48
			14.0	16.8	26.0	30	24	47	27.3	30	25	48
			23.0	27.7	39.6	40	36	47	40.9	45	38	48
		BD–STD*	–	–	10.8	15	11	49	11.8	15	12	50
			6.0	7.2	11.6	15	11	49	12.9	15	12	50
			11.5	13.8	19.9	20	18	49	21.1	25	19	50
			14.0	16.8	23.6	25	22	49	24.9	25	23	50
			23.0	27.7	37.3	40	34	49	38.5	40	35	50
		MED	–	–	11.3	15	11	52	12.3	15	12	53
			6.0	7.2	12.3	15	11	52	13.5	15	12	53
			11.5	13.8	20.5	25	19	52	21.8	25	20	53
			14.0	16.8	24.3	25	22	52	25.5	30	23	53
			23.0	27.7	37.9	40	35	52	39.1	40	36	53
		HIGH	–	–	12.1	15	12	71	13.1	15	13	72
			6.0	7.2	13.3	15	12	71	14.5	15	13	72
			11.5	13.8	21.5	25	20	71	22.8	25	21	72
			14.0	16.8	25.3	30	23	71	26.5	30	24	72
			23.0	27.7	38.9	40	36	71	40.1	45	37	72
	575–3–60	DD–STD	–	–	10.9	15	11	39	12.8	15	13	41
		BD–STD*	–	–	8.8	15	9	40	10.7	15	11	42
		MED	–	–	8.5	15	8	42	10.4	15	11	44
		HIGH	–	–	9.7	15	10	57	11.6	15	12	59

* This drive package only available on Humidi–MiZer models.

See notes on page 79.

MCA/MOCP (cont.)

Table 78 – MCA/MOCP DETERMINATION NO C.O. OR UNPWRD C.O. 5 TON

UNIT	V–Ph–Hz	IFM TYPE	ELEC. HTR		NO C.O. or UNPWR C.O.							
					NO P.E.				w/ P.E. (pwrd fr/unit)			
			Nom (kW)	FLA	MCA	MOCP	DISC. SIZE FLA	DISC. SIZE LRA	MCA	MOCP	DISC. SIZE FLA	DISC. SIZE LRA
90	208/230–1–60	DD–STD	–	–	40.1	60	39	144	42.0	60	41	146
			4.9/6.5	23.5/27.1	40.1/43.1	60/60	39/40	144/144	42.0/45.5	60/60	41/42	146/146
			6.5/8.7	31.4/36.3	48.5/54.6	60/60	45/50	144/144	50.9/57.0	60/60	47/52	146/146
			9.8/13.0	46.9/54.2	67.9/77.0	70/80	62/71	144/144	70.3/79.4	80/80	65/73	146/146
			13.1/17.4	62.8/72.5	87.8/99.9	90/100	81/92	144/144	90.1/102.3	100/110	83/94	146/146
			15.8/21.0	75.8/87.5	104.0/118.6	110/125	96/109	144/144	106.4/121.0	110/125	98/111	146/146
	208/230–3–60	DD–STD	–	–	28.7	40	28	120	30.6	45	31	122
			4.9/6.5	13.6/15.6	28.7/28.8	40/40	28/28	120/120	30.6/31.1	45/45	31/31	122/122
			7.9/10.5	21.9/25.3	36.6/40.9	40/45	34/38	120/120	39.0/43.3	45/45	36/40	122/122
			12.0/16.0	33.4/38.5	51.0/57.4	60/60	47/53	120/120	53.4/59.8	60/60	49/55	122/122
			15.8/21.0	43.8/50.5	64.0/72.4	70/80	59/67	120/120	66.4/74.8	70/80	61/69	122/122
			19.9/26.5	55.2/63.8	78.3/89.0	80/90	72/82	120/120	80.6/91.4	90/100	74/84	122/122
		BD–STD*	–	–	26.2	40	26	125	28.1	40	28	127
			4.9/6.5	13.6/15.6	26.2/26.2	40/40	26/26	125/125	28.1/28.1	40/40	28/28	127/127
			7.9/10.5	21.9/25.3	33.5/37.8	40/40	31/35	125/125	35.9/40.1	40/45	33/37	127/127
			12.0/16.0	33.4/38.5	47.9/54.3	50/60	44/50	125/125	50.3/56.6	60/60	46/52	127/127
			15.8/21.0	43.8/50.5	60.9/69.3	70/70	56/64	125/125	63.3/71.6	70/80	58/66	127/127
			19.9/26.5	55.2/63.8	75.1/85.9	80/90	69/79	125/125	77.5/88.3	80/90	71/81	127/127
		MED	–	–	26.5	40	26	143	28.4	40	28	145
			4.9/6.5	13.6/15.6	26.5/26.5	40/40	26/26	143/143	28.4/28.4	40/40	28/28	145/145
			7.9/10.5	21.9/25.3	33.9/38.1	40/40	31/35	143/143	36.3/40.5	40/45	33/37	145/145
			12.0/16.0	33.4/38.5	48.3/54.6	50/60	44/50	143/143	50.6/57.0	60/60	47/52	145/145
			15.8/21.0	43.8/50.5	61.3/69.6	70/70	56/64	143/143	63.6/72.0	70/80	59/66	145/145
			19.9/26.5	55.2/63.8	75.5/86.3	80/90	69/79	143/143	77.9/88.6	80/90	72/82	145/145
		HIGH	–	–	28.8	40	29	169	30.7	45	31	171
			4.9/6.5	13.6/15.6	28.8/28.9	40/40	29/29	169/169	30.7/31.3	45/45	31/31	171/171
			7.9/10.5	21.9/25.3	36.8/41.0	40/45	34/38	169/169	39.1/43.4	45/45	36/40	171/171
			12.0/16.0	33.4/38.5	51.1/57.5	60/60	47/53	169/169	53.5/59.9	60/60	49/55	171/171
			15.8/21.0	43.8/50.5	64.1/72.5	70/80	59/67	169/169	66.5/74.9	70/80	61/69	171/171
			19.9/26.5	55.2/63.8	78.4/89.1	80/90	72/82	169/169	80.8/91.5	90/100	74/84	171/171
	460–3–60	DD–STD	–	–	13.7	20	14	58	14.7	20	15	59
			6.0	7.2	14.0	20	14	58	15.3	20	15	59
			11.5	13.8	22.3	25	20	58	23.5	25	22	59
			14.0	16.8	26.0	30	24	58	27.3	30	25	59
			23.0	27.7	39.6	40	36	58	40.9	45	38	59
			25.5	30.7	43.4	45	40	58	44.6	45	41	59
		BD–STD*	–	–	11.8	15	12	60	12.8	15	13	61
			6.0	7.2	11.8	15	12	60	12.9	15	13	61
			11.5	13.8	19.9	20	18	60	21.1	25	19	61
			14.0	16.8	23.6	25	22	60	24.9	25	23	61
			23.0	27.7	37.3	40	34	60	38.5	40	35	61
			25.5	30.7	41.0	45	38	60	42.3	45	39	61
		MED	–	–	12.3	15	12	69	13.3	20	13	70
			6.0	7.2	12.3	15	12	69	13.5	20	13	70
			11.5	13.8	20.5	25	19	69	21.8	25	20	70
			14.0	16.8	24.3	25	22	69	25.5	30	23	70
			23.0	27.7	37.9	40	35	69	39.1	40	36	70
			25.5	30.7	41.6	45	38	69	42.9	45	39	70
		HIGH	–	–	13.1	20	13	82	14.1	20	14	83
			6.0	7.2	13.3	20	13	82	14.5	20	14	83
			11.5	13.8	21.5	25	20	82	22.8	25	21	83
			14.0	16.8	25.3	30	23	82	26.5	30	24	83
			23.0	27.7	38.9	40	36	82	40.1	45	37	83
			25.5	30.7	42.6	45	39	82	43.9	45	40	83
	575–3–60	DD–STD	–	–	11.3	15	12	46	13.2	15	14	48
		BD–STD*	–	–	9.2	15	9	47	11.1	15	11	49
		MED	–	–	9.3	15	9	53	11.2	15	11	55
		HIGH	–	–	10.1	15	10	64	12.0	15	12	66

* This drive package only available on Humidi–MiZer models.

See notes on page 79.

Table 79 – MCA/MOCP DETERMINATION NO C.O. OR UNPWRD C.O. 6 TON

UNIT	V–Ph–Hz	IFM-TYPE	ELEC. HTR Nom (kW)	ELEC. HTR FLA	NO C.O. or UNPWR C.O. NO P.E. MCA	NO P.E. MOCP	NO P.E. DISC. SIZE FLA	NO P.E. DISC. SIZE LRA	w/ P.E. (pwrd fr/unit) MCA	w/ P.E. MOCP	w/ P.E. DISC. SIZE FLA	w/ P.E. DISC. SIZE LRA
07	208/230–3–60	STD	–	–	32.0	50	31	148	35.8	50	36	152
			4.9/6.5	13.6/15.6	32.0/32.0	50/50	31/31	148/148	35.8/35.8	50/50	36/36	152/152
			7.8/10.4	21.7/25.0	33.6/37.8	50/50	31/35	148/148	38.4/42.5	50/50	36/39	152/152
			12.0/16.0	33.4/38.5	48.3/54.6	50/60	44/50	148/148	53.0/59.4	60/60	49/55	152/152
			15.8/21.0	43.8/50.5	61.3/69.6	70/70	56/64	148/148	66.0/74.4	70/80	61/68	152/152
			19.9/26.5	55.2/63.8	75.5/86.3	80/90	69/79	148/148	80.3/91.0	90/100	74/84	152/152
		MED	–	–	34.3	50	34	185	38.1	50	38	189
			4.9/6.5	13.6/15.6	34.3/34.3	50/50	34/34	185/185	38.1/38.1	50/50	38/38	189/189
			7.8/10.4	21.7/25.0	36.5/40.6	50/50	34/37	185/185	41.3/45.4	50/50	38/42	189/189
			12.0/16.0	33.4/38.5	51.1/57.5	60/60	47/53	185/185	55.9/62.3	60/70	51/57	189/189
			15.8/21.0	43.8/50.5	64.1/72.5	70/80	59/67	185/185	68.9/77.3	70/80	63/71	189/189
			19.9/26.5	55.2/63.8	78.4/89.1	80/90	72/82	185/185	83.1/93.9	90/100	76/86	189/189
		HIGH	–	–	41.8	60	43	211	45.6	60	47	215
			4.9/6.5	13.6/15.6	41.8/41.8	60/60	43/43	211/211	45.6/45.6	60/60	47/47	215/215
			7.8/10.4	21.7/25.0	45.9/50.0	60/60	43/46	211/211	50.6/54.8	60/60	47/50	215/215
			12.0/16.0	33.4/38.5	60.5/66.9	70/70	56/62	211/211	65.3/71.6	70/80	60/66	215/215
			15.8/21.0	43.8/50.5	73.5/81.9	80/90	68/75	211/211	78.3/86.6	80/90	72/80	215/215
			19.9/26.5	55.2/63.8	87.8/98.5	90/100	81/91	211/211	92.5/103.3	100/110	85/95	215/215
	460–3–60	STD	–	–	16.3	25	16	75	18.1	25	18	77
			6.0	7.2	16.3	25	16	75	18.1	25	18	77
			11.5	13.8	20.5	25	19	75	22.8	25	21	77
			14.0	16.8	24.3	25	22	75	26.5	30	24	77
			23.0	27.7	37.9	40	35	75	40.1	45	37	77
			25.5	30.7	41.6	45	38	75	43.9	45	40	77
		MED	–	–	17.1	25	17	94	18.9	25	19	96
			6.0	7.2	17.1	25	17	94	18.9	25	19	96
			11.5	13.8	21.5	25	20	94	23.8	25	22	96
			14.0	16.8	25.3	30	23	94	27.5	30	25	96
			23.0	27.7	38.9	40	36	94	41.1	45	38	96
			25.5	30.7	42.6	45	39	94	44.9	45	41	96
		HIGH	–	–	21.1	30	22	107	22.9	30	24	109
			6.0	7.2	21.1	30	22	107	22.9	30	24	109
			11.5	13.8	26.5	30	24	107	28.8	30	26	109
			14.0	16.8	30.3	35	28	107	32.5	35	30	109
			23.0	27.7	43.9	45	40	107	46.1	50	42	109
			25.5	30.7	47.6	50	44	107	49.9	50	46	109
	575–3–60	STD	–	–	11.7	15	11	61	15.5	20	16	65
		MED	–	–	13.3	20	13	76	17.1	20	17	80
		HIGH	–	–	16.1	20	16	90	19.9	25	21	94

LEGEND:

C.O. – Convenience outlet
DISC – Disconnect
FLA – Full load amps
IFM – Indoor fan motor
LRA – Locked rotor amps
MCA – Minimum circuit amps
MOCP – Maximum over current protection
P.E. – Power exhaust
UNPWRD CO – Un–powered convenient outlet

NOTES:

1. In compliance with NEC requirements for multimotor and combination load equipment (refer to NEC Articles 430 and 440), the overcurrent protective device for the unit shall be fuse or HACR breaker. Canadian units may be fuse or circuit breaker.
2. **Unbalanced 3-Phase Supply Voltage**
   Never operate a motor where a phase imbalance in supply voltage is greater than 2%. Use the following formula to determine the percentage of voltage imbalance.

$$\% \text{ Voltage Imbalance} = 100 \times \frac{\text{max voltage deviation from average voltage}}{\text{average voltage}}$$

Example: Supply voltage is 230-3-60

AB = 224 v
BC = 231 v
AC = 226 v

$$\text{Average Voltage} = \frac{(224 + 231 + 226)}{3} = \frac{681}{3}$$

$$= 227$$

Determine maximum deviation from average voltage.
(AB) 227 – 224 = 3 v
(BC) 231 – 227 = 4 v
(AC) 227 – 226 = 1 v
Maximum deviation is 4 v.
Determine percent of voltage imbalance.

$$\% \text{ Voltage Imbalance} = 100 \times \frac{4}{227}$$

$$= 1.76\%$$

This amount of phase imbalance is satisfactory as it is below the maximum allowable 2%.

IMPORTANT: If the supply voltage phase imbalance is more than 2%, contact your local electric utility company immediately.

Table 80 – MCA/MOCP DETERMINATION NO C.O. OR UNPWRD C.O. **7.5 TON**

UNIT	V–Ph–Hz	IFM TYPE	ELEC. HTR		NO C.O. or UNPWR C.O.							
					NO P.E.				w/ P.E. (pwrd fr/unit)			
			Nom (kW)	FLA	MCA	MOCP	DISC. SIZE		MCA	MOCP	DISC. SIZE	
							FLA	LRA			FLA	LRA
08	208/230–3–60	STD	–	–	38.8	50	41	191	42.6	50	45	195
			7.8/10.4	21.7/25.0	38.8/38.8	50/50	41/41	191/191	42.6/42.6	50/50	45/45	195/195
			12.0/16.0	33.4/38.5	48.3/54.6	50/60	44/50	191/191	53.0/59.4	60/60	49/55	195/195
			18.6/24.8	51.7/59.7	71.1/81.1	80/90	65/75	191/191	75.9/85.9	80/90	70/79	195/195
			24.0/32.0	66.7/77.0	89.9/102.8	90/110	83/95	191/191	94.6/107.5	100/110	87/99	195/195
			31.8/42.4	88.4/102.0	117.0/134.0	125/150	108/123	191/191	121.8/138.8	125/150	112/128	195/195
		MED	–	–	38.8	50	41	202	42.6	50	45	206
			7.8/10.4	21.7/25.0	38.8/38.8	50/50	41/41	202/202	42.6/42.6	50/50	45/45	206/206
			12.0/16.0	33.4/38.5	48.3/54.6	50/60	44/50	202/202	53.0/59.4	60/60	49/55	206/206
			18.6/24.8	51.7/59.7	71.1/81.1	80/90	65/75	202/202	75.9/85.9	80/90	70/79	206/206
			24.0/32.0	66.7/77.0	89.9/102.8	90/110	83/95	202/202	94.6/107.5	100/110	87/99	206/206
			31.8/42.4	88.4/102.0	117.0/134.0	125/150	108/123	202/202	121.8/138.8	125/150	112/128	206/206
		HIGH	–	–	43.6	50	46	245	47.4	60	51	249
			7.8/10.4	21.7/25.0	43.6/43.8	50/50	46/46	245/245	47.4/48.5	60/60	51/51	249/249
			12.0/16.0	33.4/38.5	54.3/60.6	60/70	50/56	245/245	59.0/65.4	60/70	54/60	249/249
			18.6/24.8	51.7/59.7	77.1/87.1	80/90	71/80	245/245	81.9/91.9	90/100	75/85	249/249
			24.0/32.0	66.7/77.0	95.9/108.8	100/110	88/100	245/245	100.6/113.5	110/125	93/104	249/249
			31.8/42.4	88.4/102.0	123.0/140.0	125/150	113/129	245/245	127.8/144.8	150/150	118/133	249/249
	460–3–60	STD	–	–	17.9	20	19	95	19.7	25	21	97
			13.9	16.7	24.1	25	22	95	26.4	30	24	97
			16.5	19.8	28.0	30	26	95	30.3	35	28	97
			27.8	33.4	45.0	50	41	95	47.3	50	43	97
			33.0	39.7	52.9	60	49	95	55.1	60	51	97
			41.7	50.2	66.0	70	61	95	68.3	70	63	97
		MED	–	–	17.9	20	19	101	19.7	25	21	103
			13.9	16.7	24.1	25	22	101	26.4	30	24	103
			16.5	19.8	28.0	30	26	101	30.3	35	28	103
			27.8	33.4	45.0	50	41	101	47.3	50	43	103
			33.0	39.7	52.9	60	49	101	55.1	60	51	103
			41.7	50.2	66.0	70	61	101	68.3	70	63	103
		HIGH	–	–	19.7	25	21	123	21.5	25	23	125
			13.9	16.7	26.4	30	24	123	28.6	30	26	125
			16.5	19.8	30.3	35	28	123	32.5	35	30	125
			27.8	33.4	47.3	50	43	123	49.5	50	46	125
			33.0	39.7	55.1	60	51	123	57.4	60	53	125
			41.7	50.2	68.3	70	63	123	70.5	80	65	125
	575–3–60	STD	–	–	11.9	15	12	77	15.7	20	17	81
			17.0	20.4	27.0	30	25	77	31.8	35	29	81
			34.0	40.9	52.6	60	48	77	57.4	60	53	81
		MED	–	–	12.7	15	13	81	16.5	20	18	85
			17.0	20.4	28.0	30	26	81	32.8	35	30	85
			34.0	40.9	53.6	60	49	81	58.4	60	54	85
		HIGH	–	–	13.5	15	14	92	17.3	20	19	96
			17.0	20.4	29.0	30	27	92	33.8	35	31	96
			34.0	40.9	54.6	60	50	92	59.4	60	55	96

See notes on page 81.

Table 81 – MCA/MOCP DETERMINATION NO C.O. OR UNPWRD C.O. 8.5 TON

UNIT	V–Ph–Hz	IFM TYPE	ELEC. HTR		NO C.O. or UNPWR C.O.							
					NO P.E.				w/ P.E. (pwrd fr/unit)			
			Nom (kW)	FLA	MCA	MOCP	DISC. SIZE		MCA	MOCP	DISC. SIZE	
							FLA	LRA			FLA	LRA
09	208/230–3–60	STD	–	–	39.0	50	41	191	42.8	50	45	195
			7.8/10.4	21.7/25.0	39.0/39.0	50/50	41/41	191/191	42.8/42.8	50/50	45/45	195/195
			12.0/16.0	33.4/38.5	48.3/54.6	50/60	44/50	191/191	53.0/59.4	60/60	49/55	195/195
			18.6/24.8	51.7/59.7	71.1/81.1	80/90	65/75	191/191	75.9/85.9	80/90	70/79	195/195
			24.0/32.0	66.7/77.0	89.9/102.8	90/110	83/95	191/191	94.6/107.5	100/110	87/99	195/195
			31.8/42.4	88.4/102.0	117.0/134.0	125/150	108/123	191/191	121.8/138.8	125/150	112/128	195/195
		MED	–	–	39.0	50	41	202	42.8	50	45	206
			7.8/10.4	21.7/25.0	39.0/39.0	50/50	41/41	202/202	42.8/42.8	50/50	45/45	206/206
			12.0/16.0	33.4/38.5	48.3/54.6	50/60	44/50	202/202	53.0/59.4	60/60	49/55	206/206
			18.6/24.8	51.7/59.7	71.1/81.1	80/90	65/75	202/202	75.9/85.9	80/90	70/79	206/206
			24.0/32.0	66.7/77.0	89.9/102.8	90/110	83/95	202/202	94.6/107.5	100/110	87/99	206/206
			31.8/42.4	88.4/102.0	117.0/134.0	125/150	108/123	202/202	121.8/138.8	125/150	112/128	206/206
		HIGH	–	–	43.8	50	46	245	47.6	60	51	249
			7.8/10.4	21.7/25.0	43.8/43.8	50/50	46/46	245/245	47.6/48.5	60/60	51/51	249/249
			12.0/16.0	33.4/38.5	54.3/60.6	60/70	50/56	245/245	59.0/65.4	60/70	54/60	249/249
			18.6/24.8	51.7/59.7	77.1/87.1	80/90	71/80	245/245	81.9/91.9	90/100	75/85	249/249
			24.0/32.0	66.7/77.0	95.9/108.8	100/110	88/100	245/245	100.6/113.5	110/125	93/104	249/249
			31.8/42.4	88.4/102.0	123.0/140.0	125/150	113/129	245/245	127.8/144.8	150/150	118/133	249/249
	460–3–60	STD	–	–	18.2	20	19	95	20.0	25	21	97
			13.9	16.7	24.1	25	22	95	26.4	30	24	97
			16.5	19.8	28.0	30	26	95	30.3	35	28	97
			27.8	33.4	45.0	50	41	95	47.3	50	43	97
			33.0	39.7	52.9	60	49	95	55.1	60	51	97
			41.7	50.2	66.0	70	61	95	68.3	70	63	97
		MED	–	–	18.2	20	19	101	20.0	25	21	103
			13.9	16.7	24.1	25	22	101	26.4	30	24	103
			16.5	19.8	28.0	30	26	101	30.3	35	28	103
			27.8	33.4	45.0	50	41	101	47.3	50	43	103
			33.0	39.7	52.9	60	49	101	55.1	60	51	103
			41.7	50.2	66.0	70	61	101	68.3	70	63	103
		HIGH	–	–	20.0	25	21	123	21.8	25	23	125
			13.9	16.7	26.4	30	24	123	28.6	30	26	125
			16.5	19.8	30.3	35	28	123	32.5	35	30	125
			27.8	33.4	47.3	50	43	123	49.5	50	46	125
			33.0	39.7	55.1	60	51	123	57.4	60	53	125
			41.7	50.2	68.3	70	63	123	70.5	80	65	125
	575–3–60	STD	–	–	13.2	15	14	77	17.0	20	18	81
			17.0	20.4	27.0	30	25	77	31.8	35	29	81
			34.0	40.9	52.6	60	48	77	57.4	60	53	81
		MED	–	–	14.0	20	15	81	17.8	20	19	85
			17.0	20.4	28.0	30	26	81	32.8	35	30	85
			34.0	40.9	53.6	60	49	81	58.4	60	54	85
		HIGH	–	–	14.8	20	16	92	18.6	20	20	96
			17.0	20.4	29.0	30	27	92	33.8	35	31	96
			34.0	40.9	54.6	60	50	92	59.4	60	55	96

LEGEND:

C.O. – Convenience outlet
DISC – Disconnect
FLA – Full load amps
IFM – Indoor fan motor
LRA – Locked rotor amps
MCA – Minimum circuit amps
MOCP – Maximum over current protection
P.E. – Power exhaust
UNPWRD CO – Un–powered convenient outlet

NOTES:

1. In compliance with NEC requirements for multimotor and combination load equipment (refer to NEC Articles 430 and 440), the overcurrent protective device for the unit shall be fuse or HACR breaker. Canadian units may be fuse or circuit breaker.
2. **Unbalanced 3-Phase Supply Voltage**
   Never operate a motor where a phase imbalance in supply voltage is greater than 2%. Use the following formula to determine the percentage of voltage imbalance.

$$\text{\% Voltage Imbalance} = 100 \times \frac{\text{max voltage deviation from average voltage}}{\text{average voltage}}$$

Example: Supply voltage is 230-3-60

AB = 224 v
BC = 231 v
AC = 226 v

$$\text{Average Voltage} = \frac{(224 + 231 + 226)}{3} = \frac{681}{3}$$

$$= 227$$

Determine maximum deviation from average voltage.
(AB) 227 – 224 = 3 v
(BC) 231 – 227 = 4 v
(AC) 227 – 226 = 1 v
Maximum deviation is 4 v.
Determine percent of voltage imbalance.

$$\text{\% Voltage Imbalance} = 100 \times \frac{4}{227}$$

$$= 1.76\%$$

This amount of phase imbalance is satisfactory as it is below the maximum allowable 2%.

IMPORTANT: If the supply voltage phase imbalance is more than 2%, contact your local electric utility company immediately.

Table 82 – MCA/MOCP DETERMINATION NO C.O. OR UNPWRD C.O.-10 TON — 10 TON

UNIT	V–Ph–Hz	IFM TYPE	ELEC. HTR		NO C.O. or UNPWR C.O.							
					NO P.E.				w/ P.E. (pwrd fr/unit)			
			Nom (kW)	FLA	MCA	MOCP	DISC. SIZE		MCA	MOCP	DISC. SIZE	
							FLA	LRA			FLA	LRA
12	208/230–3–60	STD	–	–	47.2	60	50	282	51.0	60	54	286
			7.8/10.4	21.7/25.0	47.2/47.2	60/60	50/50	282/282	51.0/51.0	60/60	54/54	286/286
			12.0/16.0	33.4/38.5	48.3/54.6	60/60	50/50	282/282	53.0/59.4	60/60	54/55	286/286
			24.0/32.0	66.7/77.0	89.9/102.8	90/110	83/95	282/282	94.6/107.5	100/110	87/99	286/286
			31.8/42.4	88.4/102.0	117.0/134.0	125/150	108/123	282/282	121.8/138.8	125/150	112/128	286/286
			37.6/50.0	104.2/120.3	136.8/126.8	150/150	126/144	282/282	141.5/131.6	150/150	130/149	286/286
		MED	–	–	52.0	60	55	325	55.8	60	60	329
			7.8/10.4	21.7/25.0	52.0/52.0	60/60	55/55	325/325	55.8/55.8	60/60	60/60	329/329
			12.0/16.0	33.4/38.5	54.3/60.6	60/70	55/56	325/325	59.0/65.4	60/70	60/60	329/329
			24.0/32.0	66.7/77.0	95.9/108.8	100/110	88/100	325/325	100.6/113.5	110/125	93/104	329/329
			31.8/42.4	88.4/102.0	123.0/140.0	125/150	113/129	325/325	127.8/144.8	150/150	118/133	329/329
			37.6/50.0	104.2/120.3	142.8/132.8	150/150	131/150	325/325	147.5/137.6	150/150	136/154	329/329
		HIGH	–	–	57.0	70	61	334	60.8	70	65	338
			7.8/10.4	21.7/25.0	57.0/57.0	70/70	61/61	334/334	60.8/60.8	70/70	65/65	338/338
			12.0/16.0	33.4/38.5	60.5/66.9	70/70	61/62	334/334	65.3/71.6	70/80	65/66	338/338
			24.0/32.0	66.7/77.0	102.1/115.0	110/125	94/106	334/334	106.9/119.8	110/125	98/110	338/338
			31.8/42.4	88.4/102.0	129.3/146.3	150/150	119/135	334/334	134.0/151.0	150/175	123/139	338/338
			37.6/50.0	104.2/120.3	149.0/139.1	150/175	137/156	334/334	153.8/143.8	175/175	141/160	338/338
	460–3–60	STD	–	–	23.0	30	24	135	24.8	30	26	137
			13.9	16.7	24.1	30	24	135	26.4	30	26	137
			16.5	19.8	28.0	30	26	135	30.3	35	28	137
			33.0	39.7	52.9	60	49	135	55.1	60	51	137
			41.7	50.2	66.0	70	61	135	68.3	70	63	137
			50.0	60.1	63.4	70	72	135	65.6	70	74	137
		MED	–	–	24.8	30	26	157	26.6	30	28	159
			13.9	16.7	26.4	30	26	157	28.6	30	28	159
			16.5	19.8	30.3	35	28	157	32.5	35	30	159
			33.0	39.7	55.1	60	51	157	57.4	60	53	159
			41.7	50.2	68.3	70	63	157	70.5	80	65	159
			50.0	60.1	65.6	80	74	157	67.9	80	76	159
		HIGH	–	–	27.8	30	30	161	29.6	35	32	163
			13.9	16.7	30.1	35	30	161	32.4	35	32	163
			16.5	19.8	34.0	35	31	161	36.3	40	33	163
			33.0	39.7	58.9	60	54	161	61.1	70	56	163
			41.7	50.2	72.0	80	66	161	74.3	80	68	163
			50.0	60.1	69.4	80	78	161	71.6	80	80	163
	575–3–60	STD	–	–	17.3	20	18	105	21.1	25	23	109
			17.0	20.4	28.0	30	26	105	32.8	35	30	109
			34.0	40.9	53.6	60	49	105	58.4	60	54	109
			51.0	61.3	63.8	70	73	105	68.6	80	77	109
		MED	–	–	18.1	20	19	116	21.9	25	24	120
			17.0	20.4	29.0	30	27	116	33.8	35	31	120
			34.0	40.9	54.6	60	50	116	59.4	60	55	120
			51.0	61.3	64.8	70	74	116	69.6	80	78	120
		HIGH	–	–	20.9	25	22	130	24.7	30	27	134
			17.0	20.4	32.5	35	30	130	37.3	40	34	134
			34.0	40.9	58.1	60	53	130	62.9	70	58	134
			51.0	61.3	68.3	80	77	130	73.1	80	81	134

See notes on page 81.

Table 83 – MCA/MOCP DETERMINATION NO C.O. OR UNPWRD C.O. 12.5 TON

UNIT	V–Ph–Hz	IFM TYPE	ELEC. HTR		NO C.O. or UNPWR C.O.							
					NO P.E.				W/ P.E. (pwrd fr unit)			
			Nom (kW)	FLA	MCA	MOCP	DISC. SIZE		MCA	MOCP	DISC. SIZE	
							FLA	LRA			FLA	LRA
14	208/230–3–60	STD	–	–	54.8	60	58	314	58.6	70	62	318
			12.4/16.5	34.4/39.7	54.8/59.0	60/60	58/58	314/314	58.6/63.8	70/70	62/62	318/318
			19.9/26.5	55.3/63.8	78.5/89.1	80/90	72/82	314/314	83.3/93.9	90/100	77/86	318/318
			25.2/33.5	69.9/80.6	96.8/110.1	100/125	89/101	314/314	101.5/114.9	110/125	93/106	318/318
			32.7/43.5	90.7/104.7	122.8/140.3	125/150	113/129	314/314	127.5/145.0	150/150	117/133	318/318
			37.6/50.0	104.3/120.3	139.8/129.7	150/150	129/147	314/314	144.5/134.4	150/150	133/151	318/318
		MED	–	–	57.3	70	60	331	61.1	80	65	335
			12.4/16.5	34.4/39.7	57.3/62.1	70/70	60/60	331/331	61.1/66.9	80/80	65/65	335/335
			19.9/26.5	55.3/63.8	81.6/92.3	90/100	75/85	331/331	86.4/97.0	90/100	79/89	335/335
			25.2/33.5	69.9/80.6	99.9/113.3	100/125	92/104	331/331	104.6/118.0	110/125	96/109	335/335
			32.7/43.5	90.7/104.7	125.9/143.4	150/150	116/132	331/331	130.6/148.1	150/150	120/136	335/335
			37.6/50.0	104.3/120.3	142.9/132.8	150/150	131/150	331/331	147.6/137.6	150/150	136/154	335/335
		HIGH	–	–	68.0	80	72	350	71.8	80	77	354
			12.4/16.5	34.4/39.7	68.5/75.1	80/80	72/72	350/350	73.3/79.9	80/80	77/77	354/354
			19.9/26.5	55.3/63.8	94.6/105.3	100/110	87/97	350/350	99.4/110.0	100/125	91/101	354/354
			25.2/33.5	69.9/80.6	112.9/126.3	125/150	104/116	350/350	117.6/131.0	125/150	108/121	354/354
			32.7/43.5	90.7/104.7	138.9/156.4	150/175	128/144	350/350	143.6/161.1	150/175	132/148	354/354
			37.6/50.0	104.3/120.3	155.9/145.8	175/175	143/162	350/350	160.6/150.6	175/175	148/166	354/354
	460–3–60	STD	–	–	27.6	35	29	158	29.4	35	31	160
			16.5	19.9	29.1	35	29	158	31.4	35	31	160
			26.5	31.9	44.1	45	41	158	46.4	50	43	160
			33.5	40.3	54.6	60	50	158	56.9	60	52	160
			43.5	52.3	69.6	70	64	158	71.9	80	66	160
			50.0	60.2	64.5	70	73	158	66.7	70	75	160
		MED	–	–	28.6	35	30	167	30.4	40	32	169
			16.5	19.9	30.4	35	30	167	32.6	40	32	169
			26.5	31.9	45.4	50	42	167	47.6	50	44	169
			33.5	40.3	55.9	60	51	167	58.1	60	53	169
			43.5	52.3	70.9	80	65	167	73.1	80	67	169
			50.0	60.2	65.7	80	74	167	68.0	80	76	169
		HIGH	–	–	34.6	40	37	176	36.4	45	39	178
			16.5	19.9	37.6	40	37	176	39.9	45	39	178
			26.5	31.9	52.6	60	48	176	54.9	60	50	178
			33.5	40.3	63.1	70	58	176	65.4	70	60	178
			43.5	52.3	78.1	80	72	176	80.4	90	74	178
			50.0	60.2	73.0	80	81	176	75.2	80	83	178
	575–3–60	STD	–	–	21.6	25	23	128	25.4	30	27	132
			16.5	15.9	23.4	25	23	128	28.1	30	27	132
			26.5	25.5	35.4	40	33	128	40.1	45	37	132
			33.5	32.2	43.8	45	40	128	48.5	50	45	132
			43.5	41.8	55.8	60	51	128	60.5	70	56	132
			50.0	48.1	51.6	60	59	128	56.4	60	63	132
		MED	–	–	21.6	25	23	128	25.4	30	27	132
			16.5	15.9	23.4	25	23	128	28.1	30	27	132
			26.5	25.5	35.4	40	33	128	40.1	45	37	132
			33.5	32.2	43.8	45	40	128	48.5	50	45	132
			43.5	41.8	55.8	60	51	128	60.5	70	56	132
			50.0	48.1	51.6	60	59	128	56.4	60	63	132
		HIGH	–	–	28.2	35	30	140	32.0	40	34	144
			16.5	15.9	31.1	35	30	140	35.9	40	34	144
			26.5	25.5	43.1	45	40	140	47.9	50	44	144
			33.5	32.2	51.5	60	47	140	56.3	60	52	144
			43.5	41.8	63.5	70	58	140	68.3	70	63	144
			50.0	48.1	59.4	70	66	140	64.1	70	70	144

See notes on page 81.

MCA/MOCP (cont.)

Table 84 – MCA/MOCP DETERMINATION WITH POWERED CONVENIENCE OUTLET 3 TON

UNIT	V–Ph–Hz	IFM TYPE	ELEC. HTR		w/ PWRD C.O.							
					NO P.E.				w/ P.E. (pwrd fr/unit)			
			Nom (kW)	FLA	MCA	MOCP	DISC. SIZE		MCA	MOCP	DISC. SIZE	
							FLA	LRA			FLA	LRA
04	208/230–1–60	DD–STD	–	–	34.0	50	34	93	35.9	50	36	95
			3.3/4.4	15.9/18.3	35.1/38.1	50/50	34/35	93/93	37.5/40.5	50/50	36/37	95/95
			4.9/6.5	23.5/27.1	44.6/49.1	50/50	41/45	93/93	47.0/51.5	50/60	43/47	95/95
			6.5/8.7	31.4/36.3	54.5/60.6	60/70	50/56	93/93	56.9/63.0	60/70	52/58	95/95
			7.9/10.5	37.9/43.8	62.6/70.0	70/80	58/64	93/93	65.0/72.4	70/80	60/67	95/95
			9.8/13.0	46.9/54.2	73.9/83.0	80/90	68/76	93/93	76.3/85.4	80/90	70/79	95/95
	208/230–3–60	DD–STD	–	–	26.2	30	27	87	28.1	35	29	89
			3.3/4.4	9.2/10.6	26.8/28.5	30/30	27/27	87/87	29.1/30.9	35/35	29/29	89/89
			4.9/6.5	13.6/15.6	32.3/34.8	35/35	30/32	87/87	34.6/37.1	35/40	32/34	89/89
			6.5/8.7	18.1/20.9	37.9/41.4	40/45	35/38	87/87	40.3/43.8	45/45	37/40	89/89
			7.9/10.5	21.9/25.3	42.6/46.9	45/50	39/43	87/87	45.0/49.3	50/50	41/45	89/89
			12.0/16.0	33.4/38.5	57.0/63.4	60/70	52/58	87/87	59.4/65.8	60/70	55/60	89/89
		BD–STD*	–	–	23.7	30	24	92	25.6	30	26	94
			3.3/4.4	9.2/10.6	23.7/25.4	30/30	24/24	92/92	26.0/27.8	30/30	26/26	94/94
			4.9/6.5	13.6/15.6	29.1/31.6	30/35	27/29	92/92	31.5/34.0	35/35	29/31	94/94
			6.5/8.7	18.1/20.9	34.8/38.3	35/40	32/35	92/92	37.1/40.6	40/45	34/37	94/94
			7.9/10.5	21.9/25.3	39.5/43.8	40/45	36/40	92/92	41.9/46.1	45/50	39/42	94/94
			12.0/16.0	33.4/38.5	53.9/60.3	60/70	50/55	92/92	56.3/62.6	60/70	52/58	94/94
		MED	–	–	23.7	30	24	92	25.6	30	26	94
			3.3/4.4	9.2/10.6	23.7/25.4	30/30	24/24	92/92	26.0/27.8	30/30	26/26	94/94
			4.9/6.5	13.6/15.6	29.1/31.6	30/35	27/29	92/92	31.5/34.0	35/35	29/31	94/94
			6.5/8.7	18.1/20.9	34.8/38.3	35/40	32/35	92/92	37.1/40.6	40/45	34/37	94/94
			7.9/10.5	21.9/25.3	39.5/43.8	40/45	36/40	92/92	41.9/46.1	45/50	39/42	94/94
			12.0/16.0	33.4/38.5	53.9/60.3	60/70	50/55	92/92	56.3/62.6	60/70	52/58	94/94
		HIGH	–	–	24.0	30	25	110	25.9	30	27	112
			3.3/4.4	9.2/10.6	24.0/25.8	30/30	25/25	110/110	26.4/28.1	30/30	27/27	112/112
			4.9/6.5	13.6/15.6	29.5/32.0	30/35	27/29	110/110	31.9/34.4	35/35	29/32	112/112
			6.5/8.7	18.1/20.9	35.1/38.6	40/40	32/36	110/110	37.5/41.0	40/45	35/38	112/112
			7.9/10.5	21.9/25.3	39.9/44.1	40/45	37/41	110/110	42.3/46.5	45/50	39/43	112/112
			12.0/16.0	33.4/38.5	54.3/60.6	60/70	50/56	110/110	56.6/63.0	60/70	52/58	112/112
	460–3–60	DD–STD	–	–	14.0	20	14	45	15.0	20	16	46
			6.0	7.2	16.8	20	15	45	18.0	20	17	46
			8.8	10.6	21.0	25	19	45	22.3	25	20	46
			11.5	13.8	25.0	25	23	45	26.3	30	24	46
			14.0	16.8	28.8	30	26	45	30.0	30	28	46
		BD–STD*	–	–	12.1	15	12	47	13.1	15	13	48
			6.0	7.2	14.4	15	13	47	15.6	20	14	48
			8.8	10.6	18.6	20	17	47	19.9	20	18	48
			11.5	13.8	22.6	25	21	47	23.9	25	22	48
			14.0	16.8	26.4	30	24	47	27.6	30	25	48
		MED	–	–	12.1	15	12	47	13.1	15	13	48
			6.0	7.2	14.4	15	13	47	15.6	20	14	48
			8.8	10.6	18.6	20	17	47	19.9	20	18	48
			11.5	13.8	22.6	25	21	47	23.9	25	22	48
			14.0	16.8	26.4	30	24	47	27.6	30	25	48
		HIGH	–	–	12.6	15	13	56	13.6	20	14	57
			6.0	7.2	15.0	15	14	56	16.3	20	15	57
			8.8	10.6	19.3	20	18	56	20.5	25	19	57
			11.5	13.8	23.3	25	21	56	24.5	25	23	57
			14.0	16.8	27.0	30	25	56	28.3	30	26	57
	575–3–60	DD–STD	–	–	11.0	15	12	44	12.9	15	14	46
		BD–STD*	–	–	8.9	15	9	45	10.8	15	11	47
		MED	–	–	8.9	15	9	45	10.8	15	11	47
		HIGH	–	–	9.0	15	9	51	10.9	15	11	53

* This drive package only available on Humidi–MiZer models.

See notes on page 81.

Table 85 – MCA/MOCP DETERMINATION WITH POWERED CONVENIENCE OUTLET 4 TON

UNIT	V–Ph–Hz	IFM TYPE	ELEC. HTR		w/ PWRD C.O.							
					NO P.E.				w/ P.E. (pwrd fr/unit)			
			Nom (kW)	FLA	MCA	MOCP	DISC. SIZE		MCA	MOCP	DISC. SIZE	
							FLA	LRA			FLA	LRA
05	208/230–1–60	DD–STD	–	–	40.9	60	41	132	42.8	60	43	134
			3.3/4.4	15.9/18.3	40.9/40.9	60/60	41/41	132/132	42.8/42.8	60/60	43/43	134/134
			6.5/8.7	31.4/36.3	54.5/60.6	60/70	50/56	132/132	56.9/63.0	60/70	52/58	134/134
			9.8/13.0	46.9/54.2	73.9/83.0	80/90	68/76	132/132	76.3/85.4	80/90	70/79	134/134
			13.1/17.4	62.8/72.5	93.8/105.9	100/110	86/97	132/132	96.1/108.3	100/110	88/100	134/134
			15.8/21.0	75.8/87.5	110.0/124.6	125/125	101/115	132/132	112.4/127.0	125/150	103/117	134/134
	208/230–3–60	DD–STD	–	–	30.7	40	31	98	32.6	45	34	100
			4.9/6.5	13.6/15.6	32.3/34.8	40/40	31/32	98/98	34.6/37.1	45/45	34/34	100/100
			6.5/8.7	18.1/20.9	37.9/41.4	40/45	35/38	98/98	40.3/43.8	45/45	37/40	100/100
			12.0/16.0	33.4/38.5	57.0/63.4	60/70	52/58	98/98	59.4/65.8	60/70	55/60	100/100
			15.8/21.0	43.8/50.5	70.0/78.4	80/80	64/72	98/98	72.4/80.8	80/90	67/74	100/100
		BD–STD*	–	–	28.2	40	29	103	30.1	40	31	105
			4.9/6.5	13.6/15.6	29.1/31.6	40/40	29/29	103/103	31.5/34.0	40/40	31/31	105/105
			6.5/8.7	18.1/20.9	34.8/38.3	40/40	32/35	103/103	37.1/40.6	40/45	34/37	105/105
			12.0/16.0	33.4/38.5	53.9/60.3	60/70	50/55	103/103	56.3/62.6	60/70	52/58	105/105
			15.8/21.0	43.8/50.5	66.9/75.3	70/80	62/69	103/103	69.3/77.6	70/80	64/71	105/105
		MED	–	–	28.5	40	29	110	30.4	40	31	112
			4.9/6.5	13.6/15.6	29.5/32.0	40/40	29/29	110/110	31.9/34.4	40/40	31/32	112/112
			6.5/8.7	18.1/20.9	35.1/38.6	40/40	32/36	110/110	37.5/41.0	40/45	35/38	112/112
			12.0/16.0	33.4/38.5	54.3/60.6	60/70	50/56	110/110	56.6/63.0	60/70	52/58	112/112
			15.8/21.0	43.8/50.5	67.3/75.6	70/80	62/70	110/110	69.6/78.0	70/80	64/72	112/112
		HIGH	–	–	30.8	40	32	147	32.7	45	34	149
			4.9/6.5	13.6/15.6	32.4/34.9	40/40	32/32	147/147	34.8/37.3	45/45	34/34	149/149
			6.5/8.7	18.1/20.9	38.0/41.5	40/45	35/38	147/147	40.4/43.9	45/45	37/40	149/149
			12.0/16.0	33.4/38.5	57.1/63.5	60/70	53/58	147/147	59.5/65.9	60/70	55/61	149/149
			15.8/21.0	43.8/50.5	70.1/78.5	80/80	65/72	147/147	72.5/80.9	80/90	67/74	149/149
	460–3–60	DD–STD	–	–	14.9	20	15	49	15.9	20	16	50
			6.0	7.2	16.8	20	15	49	18.0	20	17	50
			11.5	13.8	25.0	25	23	49	26.3	30	24	50
			14.0	16.8	28.8	30	26	49	30.0	30	28	50
			23.0	27.7	42.4	45	39	49	43.6	45	40	50
		BD–STD*	–	–	13.0	15	13	51	14.0	20	14	52
			6.0	7.2	14.4	15	13	51	15.6	20	14	52
			11.5	13.8	22.6	25	21	51	23.9	25	22	52
			14.0	16.8	26.4	30	24	51	27.6	30	25	52
			23.0	27.7	40.0	45	37	51	41.3	45	38	52
		MED	–	–	13.5	20	14	54	14.5	20	15	55
			6.0	7.2	15.0	20	14	54	16.3	20	15	55
			11.5	13.8	23.3	25	21	54	24.5	25	23	55
			14.0	16.8	27.0	30	25	54	28.3	30	26	55
			23.0	27.7	40.6	45	37	54	41.9	45	39	55
		HIGH	–	–	14.3	20	15	73	15.3	20	16	74
			6.0	7.2	16.0	20	15	73	17.3	20	16	74
			11.5	13.8	24.3	25	22	73	25.5	30	23	74
			14.0	16.8	28.0	30	26	73	29.3	30	27	74
			23.0	27.7	41.6	45	38	73	42.9	45	39	74
	575–3–60	DD–STD	–	–	12.6	15	13	41	14.5	20	15	43
		BD–STD*	–	–	10.5	15	11	42	12.4	15	13	44
		MED	–	–	10.2	15	10	44	12.1	15	13	46
		HIGH	–	–	11.4	15	12	59	13.3	15	14	61

* This drive package only available on Humidi–MiZer models.

See notes on page 81.

MCA/MOCP (cont.)

Table 86 – MCA/MOCP DETERMINATION WITH POWERED CONVENIENCE OUTLET 5 TON

UNIT	V–Ph–Hz	IFM TYPE	ELEC. HTR		w/ PWRD C.O.							
					NO P.E.				w/ P.E. (pwrd fr/unit)			
			Nom (kW)	FLA	MCA	MOCP	DISC. SIZE		MCA	MOCP	DISC. SIZE	
							FLA	LRA			FLA	LRA
06	208/230–1–60	DD–STD	–	–	44.9	60	44	149	46.8	60	47	151
			4.9/6.5	23.5/27.1	44.9/49.1	60/60	44/45	149/149	47.0/51.5	60/60	47/47	151/151
			6.5/8.7	31.4/36.3	54.5/60.6	60/70	50/56	149/149	56.9/63.0	60/70	52/58	151/151
			9.8/13.0	46.9/54.2	73.9/83.0	80/90	68/76	149/149	76.3/85.4	80/90	70/79	151/151
			13.1/17.4	62.8/72.5	93.8/105.9	100/110	86/97	149/149	96.1/108.3	100/110	88/100	151/151
			15.8/21.0	75.8/87.5	110.0/124.6	125/125	101/115	149/149	112.4/127.0	125/150	103/117	151/151
	208/230–3–60	DD–STD	–	–	33.5	45	34	125	35.4	50	36	127
			4.9/6.5	13.6/15.6	33.5/34.8	45/45	34/34	125/125	35.4/37.1	50/50	36/36	127/127
			7.9/10.5	21.9/25.3	42.6/46.9	45/50	39/43	125/125	45.0/49.3	50/50	41/45	127/127
			12.0/16.0	33.4/38.5	57.0/63.4	60/70	52/58	125/125	59.4/65.8	60/70	55/60	127/127
			15.8/21.0	43.8/50.5	70.0/78.4	80/80	64/72	125/125	72.4/80.8	80/90	67/74	127/127
			19.9/26.5	55.2/63.8	84.3/95.0	90/100	78/87	125/125	86.6/97.4	90/100	80/90	127/127
		BD–STD*	–	–	31.0	45	31	130	32.9	45	33	132
			4.9/6.5	13.6/15.6	31.0/31.6	45/45	31/31	130/130	32.9/34.0	45/45	33/33	132/132
			7.9/10.5	21.9/25.3	39.5/43.8	45/45	36/40	130/130	41.9/46.1	45/50	39/42	132/132
			12.0/16.0	33.4/38.5	53.9/60.3	60/70	50/55	130/130	56.3/62.6	60/70	52/58	132/132
			15.8/21.0	43.8/50.5	66.9/75.3	70/80	62/69	130/130	69.3/77.6	70/80	64/71	132/132
			19.9/26.5	55.2/63.8	81.1/91.9	90/100	75/85	130/130	83.5/94.3	90/100	77/87	132/132
		MED	–	–	31.3	45	31	148	33.2	45	34	150
			4.9/6.5	13.6/15.6	31.3/32.0	45/45	31/31	148/148	33.2/34.4	45/45	34/34	150/150
			7.9/10.5	21.9/25.3	39.9/44.1	45/45	37/41	148/148	42.3/46.5	45/50	39/43	150/150
			12.0/16.0	33.4/38.5	54.3/60.6	60/70	50/56	148/148	56.6/63.0	60/70	52/58	150/150
			15.8/21.0	43.8/50.5	67.3/75.6	70/80	62/70	148/148	69.6/78.0	70/80	64/72	150/150
			19.9/26.5	55.2/63.8	81.5/92.3	90/100	75/85	148/148	83.9/94.6	90/100	77/87	150/150
		HIGH	–	–	33.6	45	34	174	35.5	50	36	176
			4.9/6.5	13.6/15.6	33.6/34.9	45/45	34/34	174/174	35.5/37.3	50/50	36/36	176/176
			7.9/10.5	21.9/25.3	42.8/47.0	45/50	39/43	174/174	45.1/49.4	50/50	42/45	176/176
			12.0/16.0	33.4/38.5	57.1/63.5	60/70	53/58	174/174	59.5/65.9	60/70	55/61	176/176
			15.8/21.0	43.8/50.5	70.1/78.5	80/80	65/72	174/174	72.5/80.9	80/90	67/74	176/176
			19.9/26.5	55.2/63.8	84.4/95.1	90/100	78/88	174/174	86.8/97.5	90/100	80/90	176/176
	460–3–60	DD–STD	–	–	15.9	20	16	60	16.9	20	17	61
			6.0	7.2	16.8	20	16	60	18.0	20	17	61
			11.5	13.8	25.0	25	23	60	26.3	30	24	61
			14.0	16.8	28.8	30	26	60	30.0	30	28	61
			23.0	27.7	42.4	45	39	60	43.6	45	40	61
			25.5	30.7	46.1	50	42	60	47.4	50	44	61
		BD–STD*	–	–	14.0	20	14	62	15.0	20	15	63
			6.0	7.2	14.4	20	14	62	15.6	20	15	63
			11.5	13.8	22.6	25	21	62	23.9	25	22	63
			14.0	16.8	26.4	30	24	62	27.6	30	25	63
			23.0	27.7	40.0	45	37	62	41.3	45	38	63
			25.5	30.7	43.8	45	40	62	45.0	50	41	63
		MED	–	–	14.5	20	15	71	15.5	20	16	72
			6.0	7.2	15.0	20	15	71	16.3	20	16	72
			11.5	13.8	23.3	25	21	71	24.5	25	23	72
			14.0	16.8	27.0	30	25	71	28.3	30	26	72
			23.0	27.7	40.6	45	37	71	41.9	45	39	72
			25.5	30.7	44.4	45	41	71	45.6	50	42	72
		HIGH	–	–	15.3	20	16	84	16.3	20	17	85
			6.0	7.2	16.0	20	16	84	17.3	20	17	85
			11.5	13.8	24.3	25	22	84	25.5	30	23	85
			14.0	16.8	28.0	30	26	84	29.3	30	27	85
			23.0	27.7	41.6	45	38	84	42.9	45	39	85
			25.5	30.7	45.4	50	42	84	46.6	50	43	85
	575–3–60	DD–STD	–	–	13.0	15	13	48	14.9	20	16	50
		BD–STD*	–	–	10.9	15	11	49	12.8	15	13	51
		MED	–	–	11.0	15	11	55	12.9	15	13	57
		HIGH	–	–	11.8	15	12	66	13.7	15	14	68

* This drive package only available on Humidi–MiZer models.

See notes on page 81.

Table 87 – MCA/MOCP DETERMINATION WITH POWERED CONVENIENCE OUTLET 6 TON

UNIT	V–Ph–Hz	IFM TYPE	ELEC. HTR		w/ PWRD C.O.							
					NO P.E.				w/ P.E. (pwrd fr/unit)			
			Nom (kW)	FLA	MCA	MOCP	DISC. SIZE		MCA	MOCP	DISC. SIZE	
							FLA	LRA			FLA	LRA
07	208/230–3–60	STD	–	–	36.8	50	37	153	40.6	50	41	157
			4.9/6.5	13.6/15.6	36.8/36.8	50/50	37/37	153/153	40.6/40.6	50/50	41/41	157/157
			7.8/10.4	21.7/25.0	39.6/43.8	50/50	37/40	153/153	44.4/48.5	50/50	41/45	157/157
			12.0/16.0	33.4/38.5	54.3/60.6	60/70	50/56	153/153	59.0/65.4	60/70	54/60	157/157
			15.8/21.0	43.8/50.5	67.3/75.6	70/80	62/70	153/153	72.0/80.4	80/90	66/74	157/157
			19.9/26.5	55.2/63.8	81.5/92.3	90/100	75/85	153/153	86.3/97.0	90/100	79/89	157/157
		MED	–	–	39.1	50	39	190	42.9	60	44	194
			4.9/6.5	13.6/15.6	39.1/39.1	50/50	39/39	190/190	42.9/42.9	60/60	44/44	194/194
			7.8/10.4	21.7/25.0	42.5/46.6	50/50	39/43	190/190	47.3/51.4	60/60	44/47	194/194
			12.0/16.0	33.4/38.5	57.1/63.5	60/70	53/58	190/190	61.9/68.3	70/70	57/63	194/194
			15.8/21.0	43.8/50.5	70.1/78.5	80/80	65/72	190/190	74.9/83.3	80/90	69/77	194/194
			19.9/26.5	55.2/63.8	84.4/95.1	90/100	78/88	190/190	89.1/99.9	90/100	82/92	194/194
		HIGH	–	–	46.6	60	48	216	50.4	60	52	220
			4.9/6.5	13.6/15.6	46.6/46.6	60/60	48/48	216/216	50.4/50.4	60/60	52/52	220/220
			7.8/10.4	21.7/25.0	51.9/56.0	60/60	48/52	216/216	56.6/60.8	60/70	52/56	220/220
			12.0/16.0	33.4/38.5	66.5/72.9	70/80	61/67	216/216	71.3/77.6	80/80	66/71	220/220
			15.8/21.0	43.8/50.5	79.5/87.9	80/90	73/81	216/216	84.3/92.6	90/100	78/85	220/220
			19.9/26.5	55.2/63.8	93.8/104.5	100/110	86/96	216/216	98.5/109.3	100/110	91/101	220/220
	460–3–60	STD	–	–	18.5	25	19	77	20.3	30	21	79
			6.0	7.2	18.5	25	19	77	20.3	30	21	79
			11.5	13.8	23.3	25	21	77	25.5	30	23	79
			14.0	16.8	27.0	30	25	77	29.3	30	27	79
			23.0	27.7	40.6	45	37	77	42.9	45	39	79
			25.5	30.7	44.4	45	41	77	46.6	50	43	79
		MED	–	–	19.3	25	19	96	21.1	30	22	98
			6.0	7.2	19.3	25	19	96	21.1	30	22	98
			11.5	13.8	24.3	25	22	96	26.5	30	24	98
			14.0	16.8	28.0	30	26	96	30.3	35	28	98
			23.0	27.7	41.6	45	38	96	43.9	45	40	98
			25.5	30.7	45.4	50	42	96	47.6	50	44	98
		HIGH	–	–	23.3	30	24	109	25.1	30	26	111
			6.0	7.2	23.3	30	24	109	25.1	30	26	111
			11.5	13.8	29.3	30	27	109	31.5	35	29	111
			14.0	16.8	33.0	35	30	109	35.3	40	32	111
			23.0	27.7	46.6	50	43	109	48.9	50	45	111
			25.5	30.7	50.4	60	46	109	52.6	60	48	111
	575–3–60	STD	–	–	13.4	20	13	63	17.2	20	18	67
		MED	–	–	15.0	20	15	78	18.8	25	19	82
		HIGH	–	–	17.8	25	18	92	21.6	25	23	96

See notes on page 81.

Table 88 – MCA/MOCP DETERMINATION WITH POWERED CONVENIENCE OUTLET **7.5 TON**

UNIT	V–Ph–Hz	IFM TYPE	ELEC. HTR		w/ PWRD C.O.							
					NO P.E.				w/ P.E. (pwrd fr/unit)			
			Nom (kW)	FLA	MCA	MOCP	DISC. SIZE		MCA	MOCP	DISC. SIZE	
							FLA	LRA			FLA	LRA
08	208/230–3–60	STD	–	–	43.6	50	46	196	47.4	60	51	200
			7.8/10.4	21.7/25.0	43.6/43.8	50/50	46/46	196/196	47.4/48.5	60/60	51/51	200/200
			12.0/16.0	33.4/38.5	54.3/60.6	60/70	50/56	196/196	59.0/65.4	60/70	54/60	200/200
			18.6/24.8	51.7/59.7	77.1/87.1	80/90	71/80	196/196	81.9/91.9	90/100	75/85	200/200
			24.0/32.0	66.7/77.0	95.9/108.8	100/110	88/100	196/196	100.6/113.5	110/125	93/104	200/200
			31.8/42.4	88.4/102.0	123.0/140.0	125/150	113/129	196/196	127.8/144.8	150/150	118/133	200/200
		MED	–	–	43.6	50	46	207	47.4	60	51	211
			7.8/10.4	21.7/25.0	43.6/43.8	50/50	46/46	207/207	47.4/48.5	60/60	51/51	211/211
			12.0/16.0	33.4/38.5	54.3/60.6	60/70	50/56	207/207	59.0/65.4	60/70	54/60	211/211
			18.6/24.8	51.7/59.7	77.1/87.1	80/90	71/80	207/207	81.9/91.9	90/100	75/85	211/211
			24.0/32.0	66.7/77.0	95.9/108.8	100/110	88/100	207/207	100.6/113.5	110/125	93/104	211/211
			31.8/42.4	88.4/102.0	123.0/140.0	125/150	113/129	207/207	127.8/144.8	150/150	118/133	211/211
		HIGH	–	–	48.4	60	52	250	52.2	60	56	254
			7.8/10.4	21.7/25.0	48.4/49.8	60/60	52/52	250/250	52.2/54.5	60/60	56/56	254/254
			12.0/16.0	33.4/38.5	60.3/66.6	70/70	55/61	250/250	65.0/71.4	70/80	60/66	254/254
			18.6/24.8	51.7/59.7	83.1/93.1	90/100	76/86	250/250	87.9/97.9	90/100	81/90	254/254
			24.0/32.0	66.7/77.0	101.9/114.8	110/125	94/106	250/250	106.6/119.5	110/125	98/110	254/254
			31.8/42.4	88.4/102.0	129.0/146.0	150/150	119/134	250/250	133.8/150.8	150/175	123/139	254/254
	460–3–60	STD	–	–	20.1	25	21	97	21.9	25	23	99
			13.9	16.7	26.9	30	25	97	29.1	30	27	99
			16.5	19.8	30.8	35	28	97	33.0	35	30	99
			27.8	33.4	47.8	50	44	97	50.0	60	46	99
			33.0	39.7	55.6	60	51	97	57.9	60	53	99
			41.7	50.2	68.8	70	63	97	71.0	80	65	99
		MED	–	–	20.1	25	21	103	21.9	25	23	105
			13.9	16.7	26.9	30	25	103	29.1	30	27	105
			16.5	19.8	30.8	35	28	103	33.0	35	30	105
			27.8	33.4	47.8	50	44	103	50.0	60	46	105
			33.0	39.7	55.6	60	51	103	57.9	60	53	105
			41.7	50.2	68.8	70	63	103	71.0	80	65	105
		HIGH	–	–	21.9	25	23	125	23.7	30	26	127
			13.9	16.7	29.1	30	27	125	31.4	35	29	127
			16.5	19.8	33.0	35	30	125	35.3	40	32	127
			27.8	33.4	50.0	60	46	125	52.3	60	48	127
			33.0	39.7	57.9	60	53	125	60.1	70	55	127
			41.7	50.2	71.0	80	65	125	73.3	80	67	127
	575–3–60	STD	–	–	13.6	15	14	79	17.4	20	19	83
			17.0	20.4	29.1	30	27	79	33.9	35	31	83
			34.0	40.9	54.8	60	50	79	59.5	60	55	83
		MED	–	–	14.4	20	15	83	18.2	20	20	87
			17.0	20.4	30.1	35	28	83	34.9	35	32	87
			34.0	40.9	55.8	60	51	83	60.5	70	56	87
		HIGH	–	–	15.2	20	16	94	19.0	25	21	98
			17.0	20.4	31.1	35	29	94	35.9	40	33	98
			34.0	40.9	56.8	60	52	94	61.5	70	57	98

See notes on page 81.

Table 89 – MCA/MOCP DETERMINATION WITH POWERED CONVENIENCE OUTLET 8.5 TON

UNIT	V–Ph–Hz	IFM TYPE	ELEC. HTR		w/ PWRD C.O.							
					NO P.E.				w/ P.E. (pwrd fr/unit)			
			Nom (kW)	FLA	MCA	MOCP	DISC. SIZE		MCA	MOCP	DISC. SIZE	
							FLA	LRA			FLA	LRA
60	208/230–3–60	STD	–	–	43.8	50	46	196	47.6	60	51	200
			7.8/10.4	21.7/25.0	43.8/43.8	50/50	46/46	196/196	47.6/48.5	60/60	51/51	200/200
			12.0/16.0	33.4/38.5	54.3/60.6	60/70	50/56	196/196	59.0/65.4	60/70	54/60	200/200
			18.6/24.8	51.7/59.7	77.1/87.1	80/90	71/80	196/196	81.9/91.9	90/100	75/85	200/200
			24.0/32.0	66.7/77.0	95.9/108.8	100/110	88/100	196/196	100.6/113.5	110/125	93/104	200/200
			31.8/42.4	88.4/102.0	123.0/140.0	125/150	113/129	196/196	127.8/144.8	150/150	118/133	200/200
		MED	–	–	43.8	50	46	207	47.6	60	51	211
			7.8/10.4	21.7/25.0	43.8/43.8	50/50	46/46	207/207	47.6/48.5	60/60	51/51	211/211
			12.0/16.0	33.4/38.5	54.3/60.6	60/70	50/56	207/207	59.0/65.4	60/70	54/60	211/211
			18.6/24.8	51.7/59.7	77.1/87.1	80/90	71/80	207/207	81.9/91.9	90/100	75/85	211/211
			24.0/32.0	66.7/77.0	95.9/108.8	100/110	88/100	207/207	100.6/113.5	110/125	93/104	211/211
			31.8/42.4	88.4/102.0	123.0/140.0	125/150	113/129	207/207	127.8/144.8	150/150	118/133	211/211
		HIGH	–	–	48.6	60	52	250	52.4	60	56	254
			7.8/10.4	21.7/25.0	48.6/49.8	60/60	52/52	250/250	52.4/54.5	60/60	56/56	254/254
			12.0/16.0	33.4/38.5	60.3/66.6	70/70	55/61	250/250	65.0/71.4	70/80	60/66	254/254
			18.6/24.8	51.7/59.7	83.1/93.1	90/100	76/86	250/250	87.9/97.9	90/100	81/90	254/254
			24.0/32.0	66.7/77.0	101.9/114.8	110/125	94/106	250/250	106.6/119.5	110/125	98/110	254/254
			31.8/42.4	88.4/102.0	129.0/146.0	150/150	119/134	250/250	133.8/150.8	150/175	123/139	254/254
	460–3–60	STD	–	–	20.4	25	22	97	22.2	25	24	99
			13.9	16.7	26.9	30	25	97	29.1	30	27	99
			16.5	19.8	30.8	35	28	97	33.0	35	30	99
			27.8	33.4	47.8	50	44	97	50.0	60	46	99
			33.0	39.7	55.6	60	51	97	57.9	60	53	99
			41.7	50.2	68.8	70	63	97	71.0	80	65	99
		MED	–	–	20.4	25	22	103	22.2	25	24	105
			13.9	16.7	26.9	30	25	103	29.1	30	27	105
			16.5	19.8	30.8	35	28	103	33.0	35	30	105
			27.8	33.4	47.8	50	44	103	50.0	60	46	105
			33.0	39.7	55.6	60	51	103	57.9	60	53	105
			41.7	50.2	68.8	70	63	103	71.0	80	65	105
		HIGH	–	–	22.2	25	24	125	24.0	30	26	127
			13.9	16.7	29.1	30	27	125	31.4	35	29	127
			16.5	19.8	33.0	35	30	125	35.3	40	32	127
			27.8	33.4	50.0	60	46	125	52.3	60	48	127
			33.0	39.7	57.9	60	53	125	60.1	70	55	127
			41.7	50.2	71.0	80	65	125	73.3	80	67	127
	575–3–60	STD	–	–	14.9	20	16	79	18.7	20	20	83
			17.0	20.4	29.1	30	27	79	33.9	35	31	83
			34.0	40.9	54.8	60	50	79	59.5	60	55	83
		MED	–	–	15.7	20	17	83	19.5	25	21	87
			17.0	20.4	30.1	35	28	83	34.9	35	32	87
			34.0	40.9	55.8	60	51	83	60.5	70	56	87
		HIGH	–	–	16.5	20	18	94	20.3	25	22	98
			17.0	20.4	31.1	35	29	94	35.9	40	33	98
			34.0	40.9	56.8	60	52	94	61.5	70	57	98

See notes on page 81.

Table 90 – MCA/MOCP DETERMINATION WITH POWERED CONVENIENCE OUTLET **10 TON**

UNIT	V–Ph–Hz	IFM TYPE	ELEC. HTR		w/ PWRD C.O.							
					NO P.E.				w/ P.E. (pwrd fr/unit)			
			Nom (kW)	FLA	MCA	MOCP	DISC. SIZE		MCA	MOCP	DISC. SIZE	
							FLA	LRA			FLA	LRA
12	208/230–3–60	STD	–	–	52.0	60	55	287	55.8	60	60	291
			7.8/10.4	21.7/25.0	52.0/52.0	60/60	55/55	287/287	55.8/55.8	60/60	60/60	291/291
			12.0/16.0	33.4/38.5	54.3/60.6	60/70	55/56	287/287	59.0/65.4	60/70	60/60	291/291
			24.0/32.0	66.7/77.0	95.9/108.8	100/110	88/100	287/287	100.6/113.5	110/125	93/104	291/291
			31.8/42.4	88.4/102.0	123.0/140.0	125/150	113/129	287/287	127.8/144.8	150/150	118/133	291/291
			37.6/50.0	104.2/120.3	142.8/132.8	150/150	131/150	287/287	147.5/137.6	150/150	136/154	291/291
		MED	–	–	56.8	70	61	330	60.6	70	65	334
			7.8/10.4	21.7/25.0	56.8/56.8	70/70	61/61	330/330	60.6/60.6	70/70	65/65	334/334
			12.0/16.0	33.4/38.5	60.3/66.6	70/70	61/61	330/330	65.0/71.4	70/80	65/66	334/334
			24.0/32.0	66.7/77.0	101.9/114.8	110/125	94/106	330/330	106.6/119.5	110/125	98/110	334/334
			31.8/42.4	88.4/102.0	129.0/146.0	150/150	119/134	330/330	133.8/150.8	150/175	123/139	334/334
			37.6/50.0	104.2/120.3	148.8/138.8	150/150	137/155	330/330	153.5/143.6	175/175	141/160	334/334
		HIGH	–	–	61.8	70	66	339	65.6	80	71	343
			7.8/10.4	21.7/25.0	61.8/61.8	70/70	66/66	339/339	65.6/65.6	80/80	71/71	343/343
			12.0/16.0	33.4/38.5	66.5/72.9	70/80	66/67	339/339	71.3/77.6	80/80	71/71	343/343
			24.0/32.0	66.7/77.0	108.1/121.0	110/125	99/111	339/339	112.9/125.8	125/150	104/116	343/343
			31.8/42.4	88.4/102.0	135.3/152.3	150/175	124/140	339/339	140.0/157.0	150/175	129/144	343/343
			37.6/50.0	104.2/120.3	155.0/145.1	175/175	143/161	339/339	159.8/149.8	175/175	147/165	343/343
	460–3–60	STD	–	–	25.2	30	27	137	27.0	30	29	139
			13.9	16.7	26.9	30	27	137	29.1	30	29	139
			16.5	19.8	30.8	35	28	137	33.0	35	30	139
			33.0	39.7	55.6	60	51	137	57.9	60	53	139
			41.7	50.2	68.8	70	63	137	71.0	80	65	139
			50.0	60.1	66.1	70	75	137	68.4	70	77	139
		MED	–	–	27.0	30	29	159	28.8	35	31	161
			13.9	16.7	29.1	30	29	159	31.4	35	31	161
			16.5	19.8	33.0	35	30	159	35.3	40	32	161
			33.0	39.7	57.9	60	53	159	60.1	70	55	161
			41.7	50.2	71.0	80	65	159	73.3	80	67	161
			50.0	60.1	68.4	80	77	159	70.6	80	79	161
		HIGH	–	–	30.0	35	32	163	31.8	35	34	165
			13.9	16.7	32.9	35	32	163	35.1	40	34	165
			16.5	19.8	36.8	40	34	163	39.0	40	36	165
			33.0	39.7	61.6	70	57	163	63.9	70	59	165
			41.7	50.2	74.8	80	69	163	77.0	80	71	165
			50.0	60.1	72.1	80	80	163	74.4	80	82	165
	575–3–60	STD	–	–	19.0	25	20	107	22.8	25	25	111
			17.0	20.4	30.1	35	28	107	34.9	35	32	111
			34.0	40.9	55.8	60	51	107	60.5	70	56	111
			51.0	61.3	65.9	70	75	107	70.7	80	79	111
		MED	–	–	19.8	25	21	118	23.6	30	26	122
			17.0	20.4	31.1	35	29	118	35.9	40	33	122
			34.0	40.9	56.8	60	52	118	61.5	70	57	122
			51.0	61.3	66.9	70	76	118	71.7	80	80	122
		HIGH	–	–	22.6	25	24	132	26.4	30	29	136
			17.0	20.4	34.6	35	32	132	39.4	40	36	136
			34.0	40.9	60.3	70	55	132	65.0	70	60	136
			51.0	61.3	70.4	80	79	132	75.2	80	83	136

See notes on page 81.

Table 91 – MCA/MOCP DETERMINATION WITH POWERED CONVENIENCE OUTLET 12.5 TON

UNIT	V–Ph–Hz	IFM TYPE	ELEC. HTR		w/ PWRD C.O.							
					NO P.E.				W/ P.E. (pwrd fr/unit)			
			Nom (kW)	FLA	MCA	MOCP	DISC. SIZE		MCA	MOCP	DISC. SIZE	
							FLA	LRA			FLA	LRA
14	208/230–3–60	STD	–	–	59.6	70	63	319	63.4	80	67	323
			12.4/16.5	34.4/39.7	59.6/65.0	70/70	63/63	319/319	63.4/69.8	80/80	67/67	323/323
			19.9/26.5	55.3/63.8	84.5/95.1	90/100	78/88	319/319	89.3/99.9	90/100	82/92	323/323
			25.2/33.5	69.9/80.6	102.8/116.1	110/125	95/107	319/319	107.5/120.9	110/125	99/111	323/323
			32.7/43.5	90.7/104.7	128.8/146.3	150/150	118/135	319/319	133.5/151.0	150/175	123/139	323/323
			37.6/50.0	104.3/120.3	145.8/135.7	150/150	134/152	319/319	150.5/140.4	175/150	138/157	323/323
		MED	–	–	62.1	80	66	336	65.9	80	70	340
			12.4/16.5	34.4/39.7	62.1/68.1	80/80	66/66	336/336	66.3/72.9	80/80	70/70	340/340
			19.9/26.5	55.3/63.8	87.6/98.3	90/100	81/90	336/336	92.4/103.0	100/110	85/95	340/340
			25.2/33.5	69.9/80.6	105.9/119.3	110/125	97/110	336/336	110.6/124.0	125/125	102/114	340/340
			32.7/43.5	90.7/104.7	131.9/149.4	150/150	121/137	336/336	136.6/154.1	150/175	126/142	340/340
			37.6/50.0	104.3/120.3	148.9/138.8	150/150	137/155	336/336	153.6/143.6	175/175	141/160	340/340
		HIGH	–	–	72.8	80	78	355	76.6	90	82	359
			12.4/16.5	34.4/39.7	74.5/81.1	80/90	78/78	355/355	79.3/85.9	90/90	82/82	359/359
			19.9/26.5	55.3/63.8	100.6/111.3	100/125	93/102	355/355	105.4/116.0	110/125	97/107	359/359
			25.2/33.5	69.9/80.6	118.9/132.3	125/150	109/122	355/355	123.6/137.0	125/150	114/126	359/359
			32.7/43.5	90.7/104.7	144.9/162.4	150/175	133/149	355/355	149.6/167.1	150/175	138/154	359/359
			37.6/50.0	104.3/120.3	161.9/151.8	175/175	149/167	355/355	166.6/156.6	175/175	153/172	359/359
	460–3–60	STD	–	–	29.8	35	32	160	31.6	40	34	162
			16.5	19.9	31.9	35	32	160	34.1	40	34	162
			26.5	31.9	46.9	50	43	160	49.1	50	45	162
			33.5	40.3	57.4	60	53	160	59.6	60	55	162
			43.5	52.3	72.4	80	67	160	74.6	80	69	162
			50.0	60.2	67.2	80	76	160	69.5	80	78	162
		MED	–	–	30.8	40	33	169	32.6	40	35	171
			16.5	19.9	33.1	40	33	169	35.4	40	35	171
			26.5	31.9	48.1	50	44	169	50.4	60	46	171
			33.5	40.3	58.6	60	54	169	60.9	70	56	171
			43.5	52.3	73.6	80	68	169	75.9	80	70	171
			50.0	60.2	68.5	80	77	169	70.7	80	79	171
		HIGH	–	–	36.8	45	39	178	38.6	45	41	180
			16.5	19.9	40.4	45	39	178	42.6	45	41	180
			26.5	31.9	55.4	60	51	178	57.6	60	53	180
			33.5	40.3	65.9	70	61	178	68.1	70	63	180
			43.5	52.3	80.9	90	74	178	83.1	90	76	180
			50.0	60.2	75.7	80	83	178	78.0	80	86	180
	575–3–60	STD	–	–	23.3	30	25	130	27.1	30	29	134
			16.5	15.9	25.5	30	25	130	30.3	35	29	134
			26.5	25.5	37.5	40	35	130	42.3	45	39	134
			33.5	32.2	45.9	50	42	130	50.6	60	47	134
			43.5	41.8	57.9	60	53	130	62.6	70	58	134
			50.0	48.1	53.7	60	60	130	58.5	60	65	134
		MED	–	–	23.3	30	25	130	27.1	30	29	134
			16.5	15.9	25.5	30	25	130	30.3	35	29	134
			26.5	25.5	37.5	40	35	130	42.3	45	39	134
			33.5	32.2	45.9	50	42	130	50.6	60	47	134
			43.5	41.8	57.9	60	53	130	62.6	70	58	134
			50.0	48.1	53.7	60	60	130	58.5	60	65	134
		HIGH	–	–	29.9	35	32	142	33.7	40	36	146
			16.5	15.9	33.3	35	32	142	38.0	40	36	146
			26.5	25.5	45.3	50	42	142	50.0	60	46	146
			33.5	32.2	53.6	60	49	142	58.4	60	54	146
			43.5	41.8	65.6	70	60	142	70.4	80	65	146
			50.0	48.1	61.5	70	68	142	66.2	70	72	146

See notes on page 81.

TYPICAL WIRING DIAGRAMS

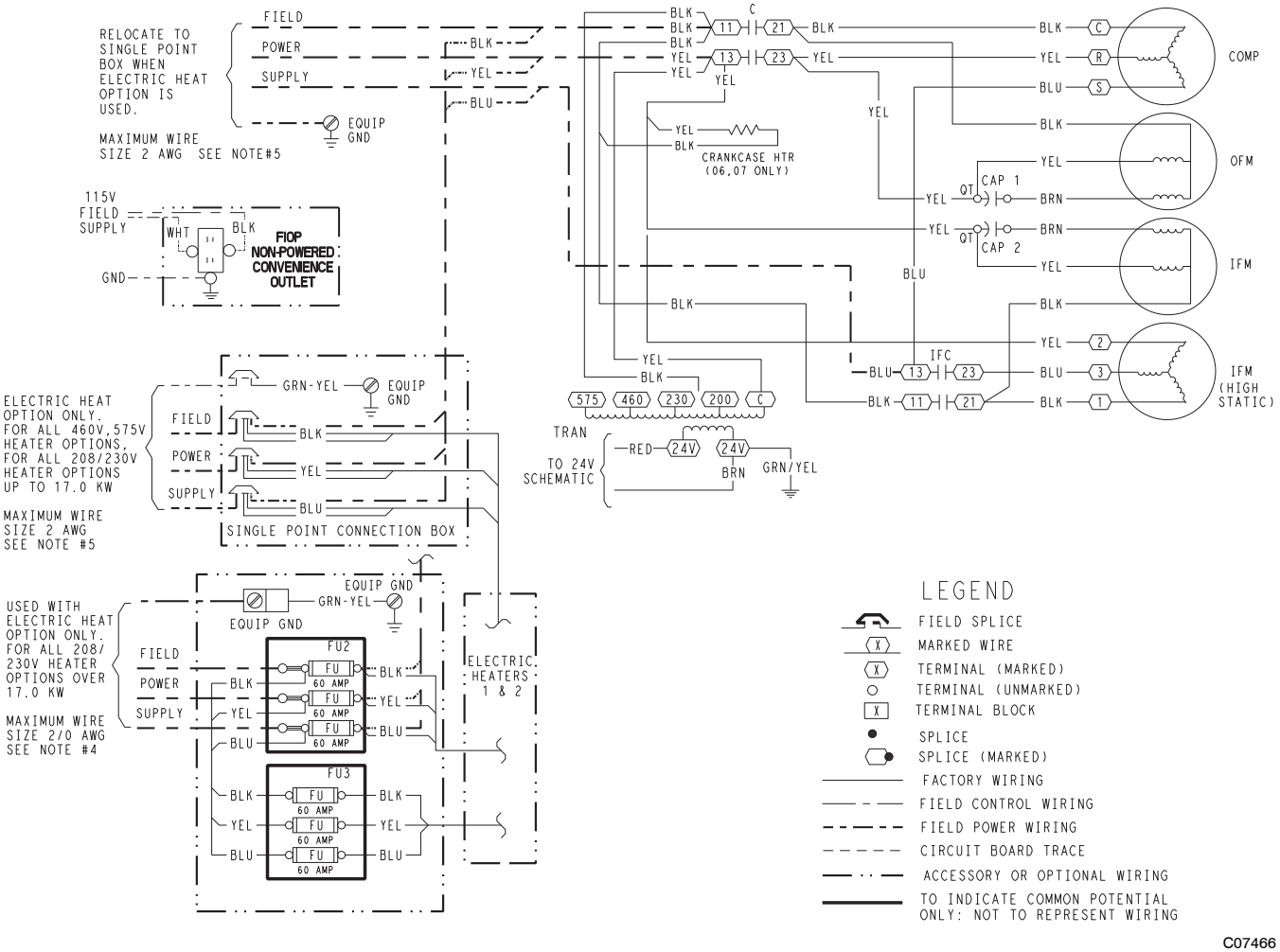

Fig. 27 - 1-Stage Cooling Typical Power Diagram

LEGEND

C	–	Contactor, compressor
CAP	–	Capacitor
CB	–	Circuit breaker
COMP	–	Compressor motor
DDC	–	Direct digital control
FU	–	Fuse
GND	–	Ground
HPS	–	High pressure switch
IAQ	–	Indoor air quality sensors
IFC	–	Indoor fan contactor
IFM	–	Indoor fan motor
LA	–	Low ambient lockout
LPS	–	Low pressure switch
OAT	–	Outdoor air temp sensor
OFM	–	Outdoor fan motor
OLR	–	Overload relay
PL	–	Plug assembly
POT	–	Potentiometer
PMR	–	Phase monitor relay
QT	–	Quadruple terminal
R	–	Relay
RAT	–	Return air temp sensor
SAT	–	Supply air temp sensor
TDR	–	Time delay relay
TRAN	–	Transformer

NOTES:

1. If any of the original wire furnished must be replaced, it must be replaced with type 90 C wire or its equivalent.
2. Compressor and fan motors are thermally protected. Three phase motors are protected against primary single phasing conditions.
3. On 208/230V units, transformer is wired for 230V. If unit is to be run with 208V power supply, disconnect black wire from 230V tap and connect to 200V tap. 230V, 200V taps on transformer do not appear on 575V transformer and 575V tap does not appear on 208/23/460V transformer.
4. Use copper, copper clad, aluminum or aluminum connectors.
5. Use copper conductor only.

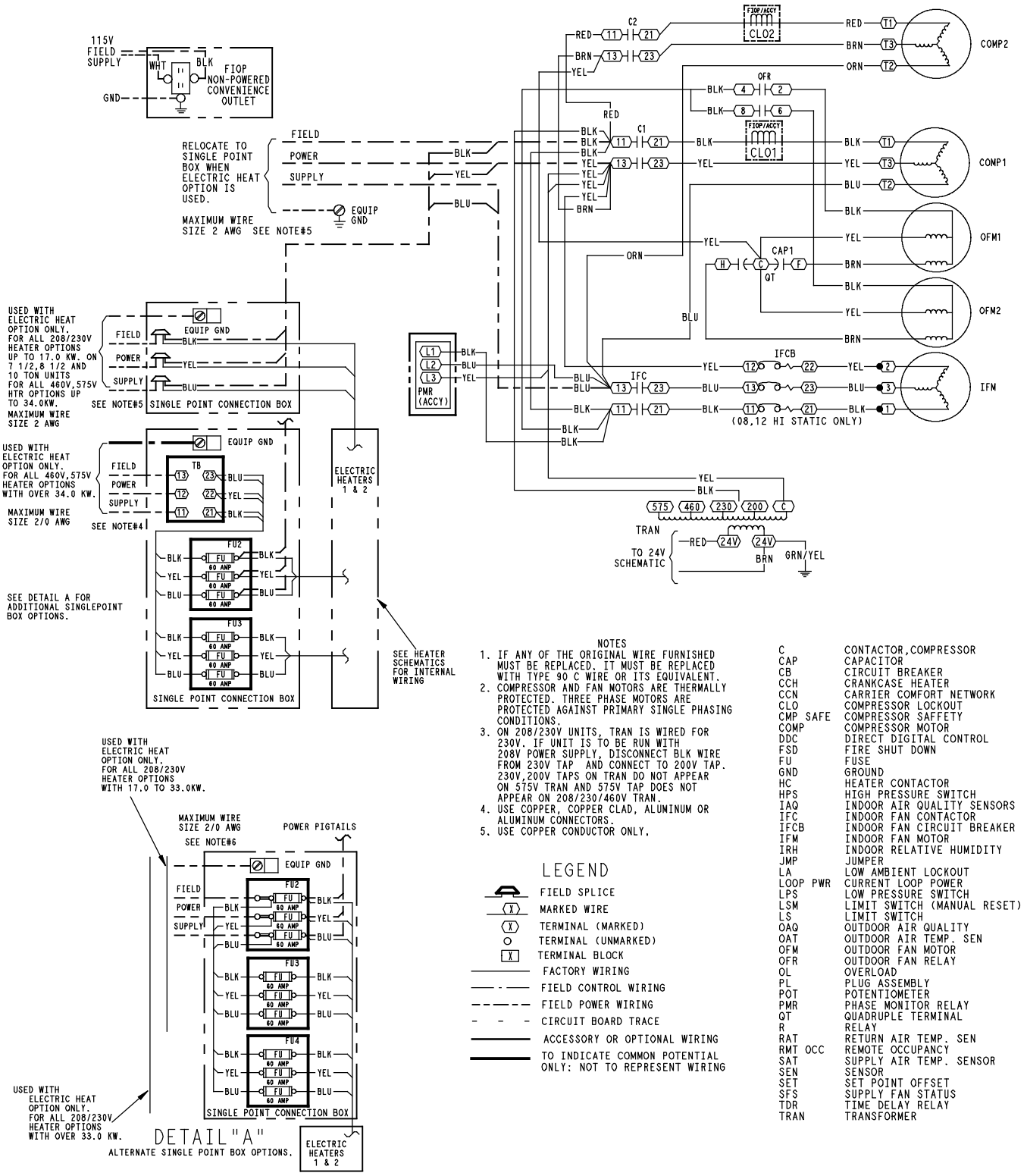

NOTES

1. IF ANY OF THE ORIGINAL WIRE FURNISHED MUST BE REPLACED, IT MUST BE REPLACED WITH TYPE 90 C WIRE OR ITS EQUIVALENT.
2. COMPRESSOR AND FAN MOTORS ARE THERMALLY PROTECTED. THREE PHASE MOTORS ARE PROTECTED AGAINST PRIMARY SINGLE PHASING CONDITIONS.
3. ON 208/230V UNITS, TRAN IS WIRED FOR 230V. IF UNIT IS TO BE RUN WITH 208V POWER SUPPLY, DISCONNECT BLK WIRE FROM 230V TAP AND CONNECT TO 200V TAP. 230V,200V TAPS ON TRAN DO NOT APPEAR ON 575V TRAN AND 575V TAP DOES NOT APPEAR ON 208/230/460V TRAN.
4. USE COPPER, COPPER CLAD, ALUMINUM OR ALUMINUM CONNECTORS.
5. USE COPPER CONDUCTOR ONLY.

LEGEND

- FIELD SPLICE
- MARKED WIRE
- TERMINAL (MARKED)
- TERMINAL (UNMARKED)
- TERMINAL BLOCK
- FACTORY WIRING
- FIELD CONTROL WIRING
- FIELD POWER WIRING
- CIRCUIT BOARD TRACE
- ACCESSORY OR OPTIONAL WIRING
- TO INDICATE COMMON POTENTIAL ONLY: NOT TO REPRESENT WIRING

C	CONTACTOR,COMPRESSOR
CAP	CAPACITOR
CB	CIRCUIT BREAKER
CCH	CRANKCASE HEATER
CCN	CARRIER COMFORT NETWORK
CLO	COMPRESSOR LOCKOUT
CMP SAFE	COMPRESSOR SAFFETY
COMP	COMPRESSOR MOTOR
DDC	DIRECT DIGITAL CONTROL
FSD	FIRE SHUT DOWN
FU	FUSE
GND	GROUND
HC	HEATER CONTACTOR
HPS	HIGH PRESSURE SWITCH
IAQ	INDOOR AIR QUALITY SENSORS
IFC	INDOOR FAN CONTACTOR
IFCB	INDOOR FAN CIRCUIT BREAKER
IFM	INDOOR FAN MOTOR
IRH	INDOOR RELATIVE HUMIDITY
JMP	JUMPER
LA	LOW AMBIENT LOCKOUT
LOOP PWR	CURRENT LOOP POWER
LPS	LOW PRESSURE SWITCH
LSM	LIMIT SWITCH (MANUAL RESET)
LS	LIMIT SWITCH
OAQ	OUTDOOR AIR QUALITY
OAT	OUTDOOR AIR TEMP. SEN
OFM	OUTDOOR FAN MOTOR
OFR	OUTDOOR FAN RELAY
OL	OVERLOAD
PL	PLUG ASSEMBLY
POT	POTENTIOMETER
PMR	PHASE MONITOR RELAY
QT	QUADRUPLE TERMINAL
R	RELAY
RAT	RETURN AIR TEMP. SEN
RMT OCC	REMOTE OCCUPANCY
SAT	SUPPLY AIR TEMP. SENSOR
SEN	SENSOR
SET	SET POINT OFFSET
SFS	SUPPLY FAN STATUS
TDR	TIME DELAY RELAY
TRAN	TRANSFORMER

Fig. 28 - 2-Stage Cooling Typical Power Diagram

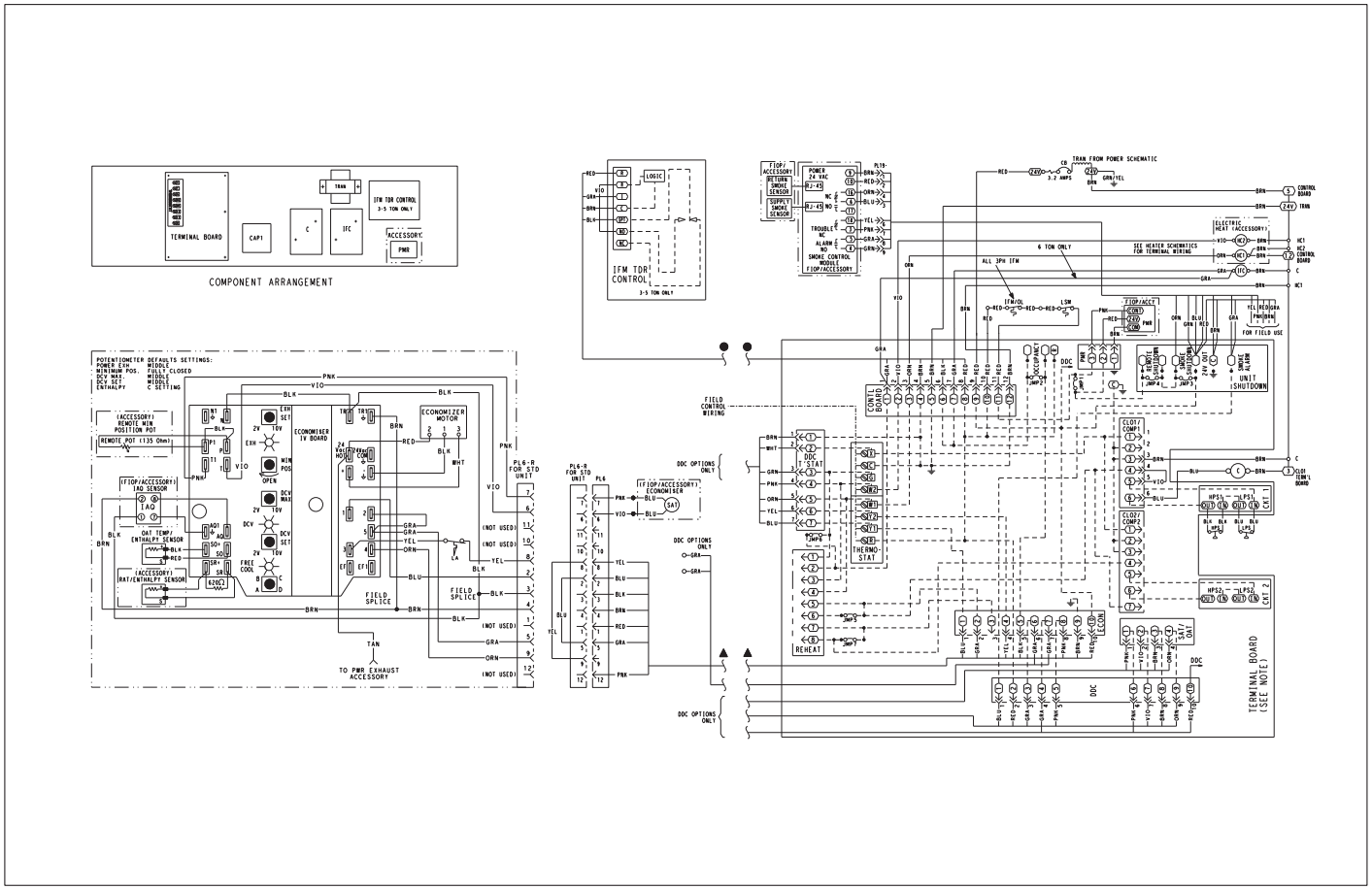

C08002

Fig. 29 - 1-Stage Typical Wiring Diagram

NOTES:

Terminal board schematic layout does not match actual terminal board to simplify circuit traces. Ensure designated jumpers on terminal board are cut when adding smoke detectors, phase loss relay and remote shutdown.

ECONOMIZER NOTES:

1. 620 ohm, 1 watt, 5% resister should be removed only when using differential enthalpy or dry bulb.
2. If a separate field–supplied 24V transformer is used for the IAQ sensor power supply, it cannot have the secondary of the transformer grounded.
3. For field–installed remote minimum position POT, remove black wire jumper between P and P1 and set control minimum position POT to the minimum position.

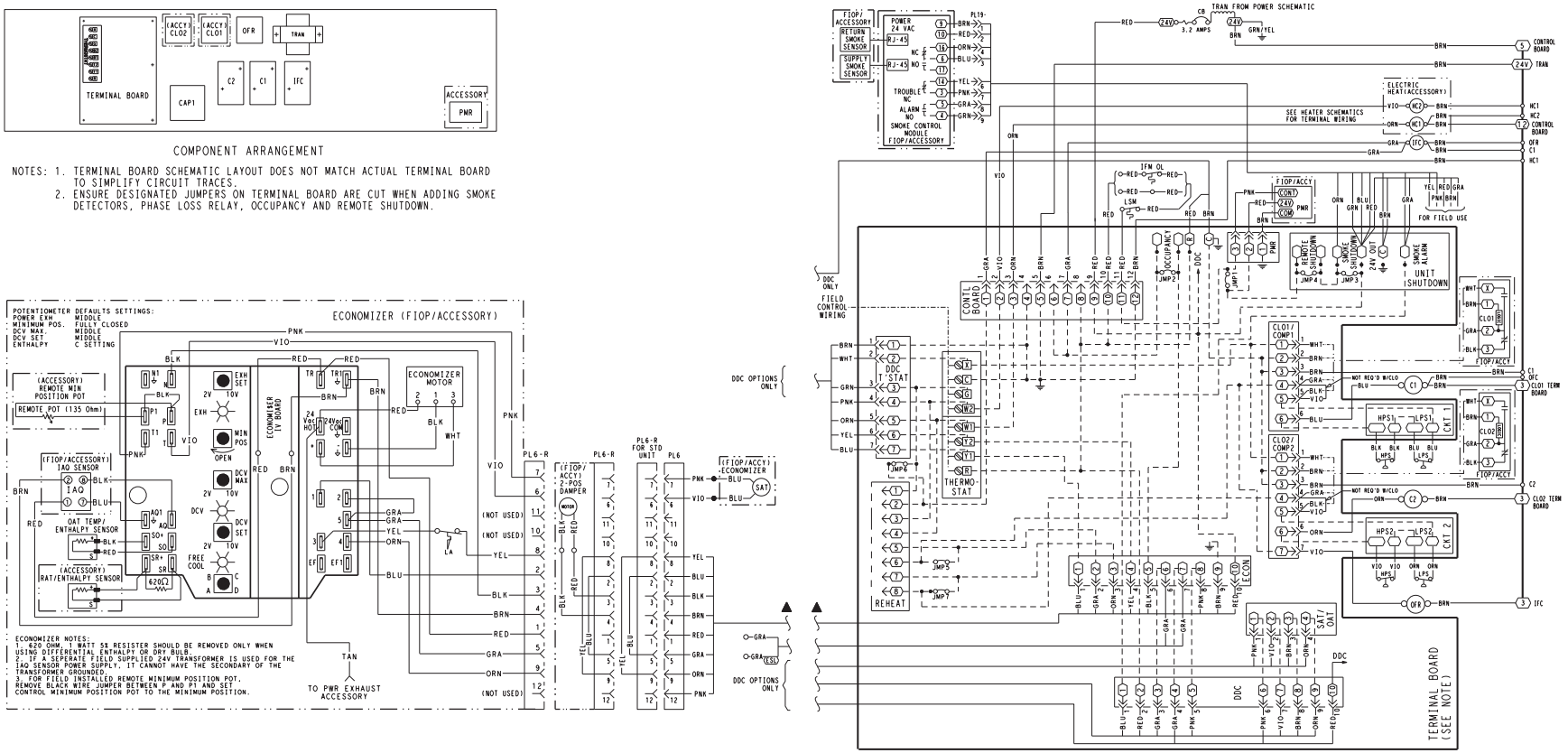

Fig. 30 - 2-Stage Typical Wiring Diagram

SEQUENCE OF OPERATION

General

The sequence below describes the sequence of operation for an electro-mechanical unit with and without a factory installed EconoMi$er™ IV (called "economizer" in this sequence). For information regarding a direct digital controller, see the start-up, operations, and troubleshooting manual for the applicable controller.

Electro-mechanical units with no economizer

Cooling —

When the thermostat calls for cooling, terminals G and Y1 are energized. As a result, the indoor-fan contactor (IFC) and the compressor contactor (C1) are energized, causing the indoor-an motor (IFM), compressor #1, and outdoor fan to start. If the unit has 2 stages of cooling, the thermostat will additionally energize Y2. The Y2 signal will energize compressor contactor #2 (C2), causing compressor #2 to start. Regardless of the number of stages, the outdoor-fan motor runs continuously while unit is cooling.

Heating

NOTE: The 50HC is sold as cooling only. If electric heaters are required, use only factory-approved electric heaters. They will operate as described below.

Units have either 1 or 2 stages of electric heat. When the thermostat calls for heating, power is applied to the W1 terminal at the unit. The unit control will energize the indoor fan contactor and the first stage of electric heat. On units with two-stage heating, when additional heating is required, the second stage of electric heat (if equipped) will be energized when power is applied at the W2 terminal on the unit.

Electro-mechanical units with an economizer

Cooling —

When free cooling is not available, the compressors will be controlled by the zone thermostat. When free cooling is available, the outdoor-air damper is modulated by the EconoMi$er IV control to provide a 50°F (10°C) to 55°F (13°C) mixed-air temperature into the zone. As the mixed air temperature fluctuates above 55°F (13°C) or below 50°F (10°C) dampers will be modulated (open or close) to bring the mixed-air temperature back within control. If mechanical cooling is utilized with free cooling, the outdoor-air damper will maintain its current position at the time the compressor is started. If the increase in cooling capacity causes the mixed-air temperature to drop below 45°F (9°C), then the outdoor-air damper position will be decreased to the minimum position. If the mixed-air temperature continues to fall, the outdoor-air damper will close. Control returns to normal once the mixed-air temperature rises above 48°F (9°C). The power exhaust fans will be energized and de-energized, if installed, as the outdoor-air damper opens and closes.

If field-installed accessory CO_2 sensors are connected to the EconoMi$er IV control, a demand controlled ventilation strategy will begin to operate. As the CO_2 level in the zone increases above the CO_2 setpoint, the minimum position of the damper will be increased proportionally. As the CO_2 level decreases because of the increase in fresh air, the outdoor-air damper will be proportionally closed. For EconoMi$er IV operation, there must be a thermostat call for the fan (G). If the unit is occupied and the fan is on, the damper will operate at minimum position. Otherwise, the damper will be closed.

When the EconoMi$er IV control is in the occupied mode and a call for cooling exists (Y1 on the thermostat), the control will first check for indoor fan operation. If the fan is not on, then cooling will not be activated. If the fan is on, then the control will open the EconoMi$er IV damper to the minimum position.

On the initial power to the EconoMi$er IV control, it will take the damper up to 2 1/2 minutes before it begins to position itself. After the initial power-up, further changes in damper position can take up to 30 seconds to initiate. Damper movement from full closed to full open (or vice versa) will take between 1 1/2 and 2 1/2 minutes. If free cooling can be used as determined from the appropriate changeover command (switch, dry bulb, enthalpy curve, differential dry bulb, or differential enthalpy), then the control will modulate the dampers open to maintain the mixed-air temperature setpoint at 50°F (10°C) to 55°F (13°C). If there is a further demand for cooling (cooling second stage - Y2 is energized), then the control will bring on compressor stage 1 to maintain the mixed-air temperature setpoint. The EconoMi$er IV damper will be open at maximum position. EconoMi$er IV operation is limited to a single compressor.

Heating

The sequence of operation for the heating is the same as an electromechanical unit with no economizer. The only difference is how the economizer acts. The economizer will stay at the Economizer Minimum Position while the evaporator fan is operating. The outdoor-air damper is closed when the indoor fan is not operating.

Optional Humidi-MiZer Dehumidification System

Units with the factory-equipped Humidi-MiZer option are capable of providing multiple modes of improved dehumidification as a variation of the normal cooling cycle. The Humidi-MiZer option includes additional valves in the liquid line and discharge line of each refrigerant circuit, a small reheat condenser coil downstream of the evaporator, and Motormaster variable-speed control of some or all outdoor fans. Operation of the revised refrigerant circuit for each mode is described below.

NOTE: x = refrigerant circuit A, B, or C.

Normal Cooling

Refrigerant flows from the outdoor condenser through the normally open Cooling Valve (CV.x) to the expansion device. Reheat1 Valve (RH1.x) and Reheat2 Valve (RH2.x) are closed.

Reheat1 (Subcooling Mode) - 50HC04-14

This mode increases latent cooling and decreases sensible cooling compared to normal cooling. Refrigerant flows from the outdoor condenser, through the normally open Reheat1 Valve (RH1.x), and through the reheat condenser coil to the expansion device. Cooling Valve (CV.x) and Reheat2 Valve (RH2.x) are closed.

Reheat2 (Hot Gas Reheat Mode) -50HC04-14

This mode provides maximum latent cooling with little to no sensible capacity. This mode can operate to provide dehumidification when there is no cooling demand. Like Reheat1 mode, refrigerant flows from the outdoor condenser, through the normally open Reheat1 Valve (RH1.x), and through the reheat condenser coil to the expansion device. The Cooling Valve (CV.x) is closed. Reheat2 Valve (RH2.x) is open which provides some compressor discharge gas to the reheat condenser to further increase the reheat of the evaporator airstream.

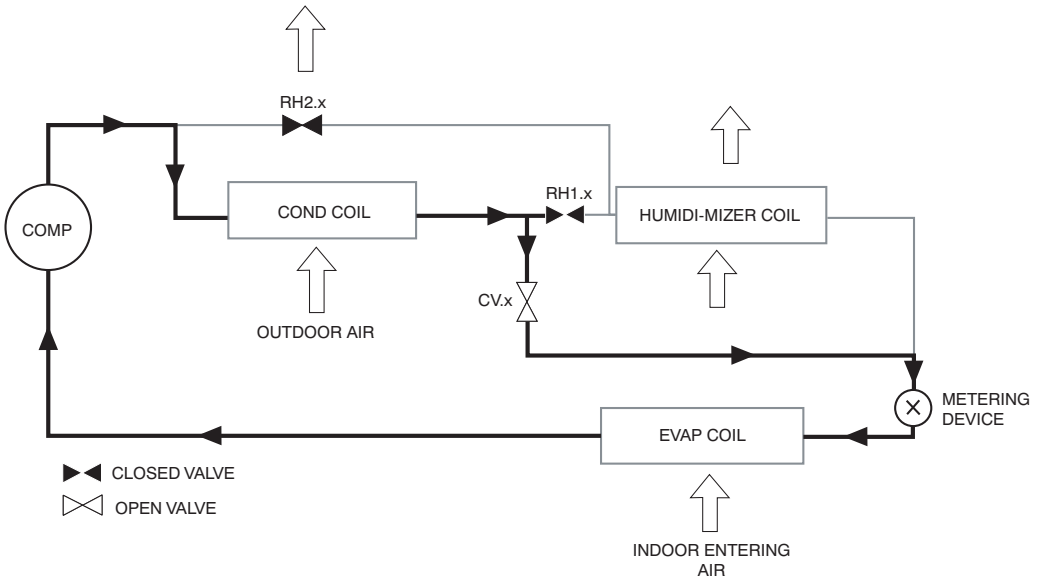

C07119

Normal Cooling Mode - Humidi-MiZer System (50HC04-14)

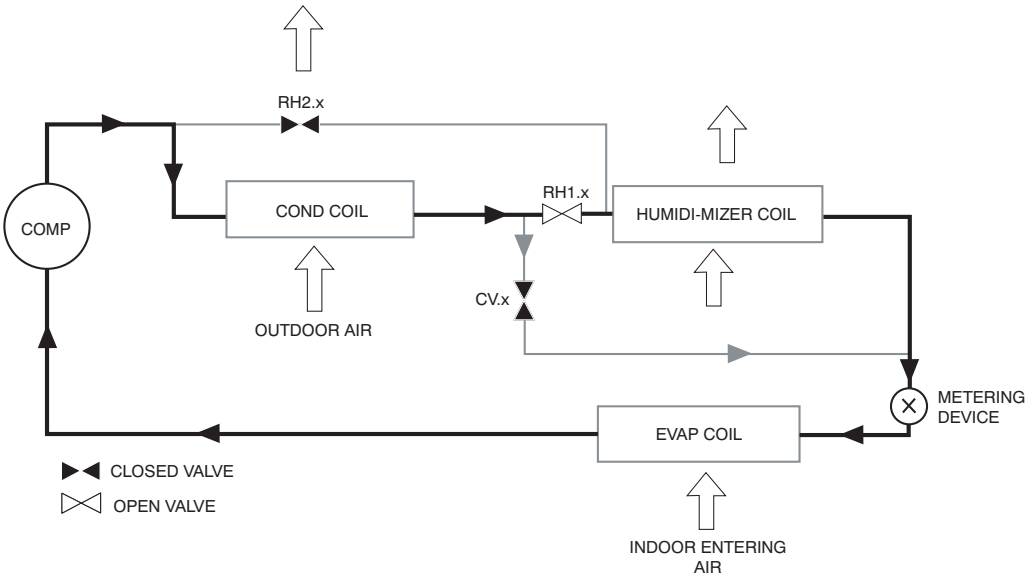

C07120

Subcooling Mode (Reheat 1) - Humidi-MiZer System (50HC04-14)

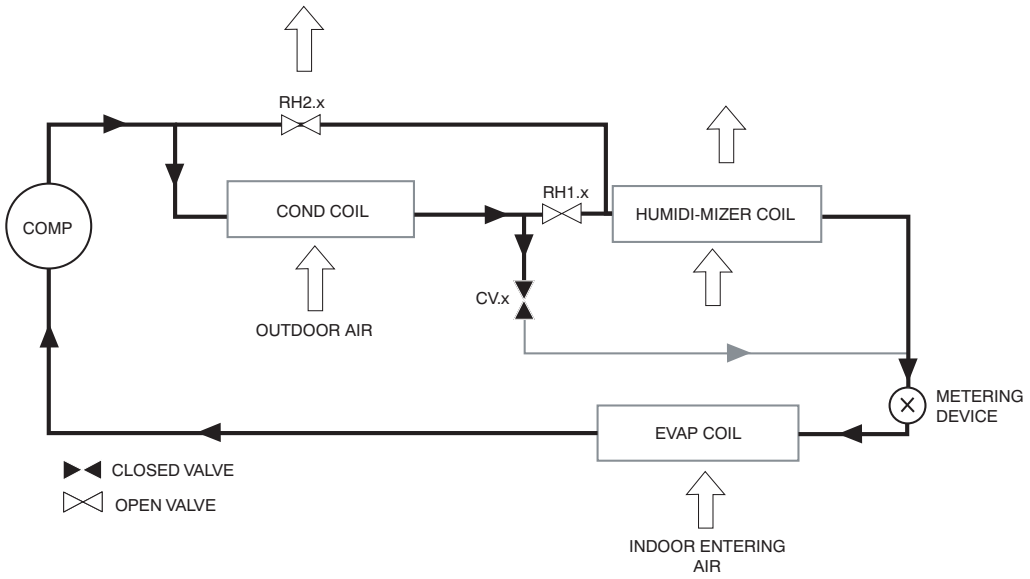

Hot Gas Reheat Mode (Reheat2) - Humidi-MiZer System (50HC04-14)

GUIDE SPECIFICATIONS - 50HC**04-14

Note about this specification:

This specification is in the "Masterformat" as published by the Construction Specification Institute. Please feel free to copy this specification directly into your building spec.

Cooling Only/Electric Heat Packaged Rooftop

HVAC Guide Specifications

Size Range: **3 to 12.5 Nominal Tons**

Section	Description
23 06 80	**Schedules for Decentralized HVAC Equipment**
23 06 80.13	Decentralized Unitary HVAC Equipment Schedule
23 06 80.13.A.	Rooftop unit schedule

1. Schedule is per the project specification requirements.

23 07 16 HVAC Equipment Insulation

23 07 16.13 Decentralized, Rooftop Units:

23 07 16.13.A. Evaporator fan compartment:

1. Interior cabinet surfaces shall be insulated with a minimum 1/2-in. thick, minimum 1 1/2 lb density, flexible fiberglass insulation bonded with a phenolic binder, neoprene coated on the air side.
2. Insulation and adhesive shall meet NFPA 90A requirements for flame spread and smoke generation.

23 07 16.13.B. Electric heat compartment:

1. Aluminum foil-faced fiberglass insulation shall be used.
2. Insulation and adhesive shall meet NFPA 90A requirements for flame spread and smoke generation.

23 09 13 Instrumentation and Control Devices for HVAC

23 09 13.23 Sensors and Transmitters

23 09 13.23.A. Thermostats

1. Thermostat must
   a. energize both "W" and "G" when calling for heat.
   b. have capability to energize 2 different stages of cooling, and 2 different stages of heating.
   c. include capability for occupancy scheduling.

23 09 23 Direct-digital Control system for HVAC

23 09 23.13 Decentralized, Rooftop Units:

23 09 23.13.A. PremierLink™ controller

1. Shall be ASHRAE 62-2001 compliant.
2. Shall accept 18-32VAC input power.
3. Shall have an operating temperature range from -40°F (-40°C) to 158°F (70°C), 10% - 95% RH (non-condensing).
4. Shall include an integrated economizer controller to support an economizer with 4 to 20 mA actuator input and no microprocessor controller.
5. Controller shall accept the following inputs: space temperature, setpoint adjustment, outdoor air temperature, indoor air quality, outdoor air quality, indoor relative humidity, compressor lock-out, fire shutdown, enthalpy, fan status, remote time clock/door switch.
6. Shall accept a CO_2 sensor in the conditioned space, and be Demand Control Ventilation (DCV) ready.

7. Shall provide the following outputs: Economizer, fan, cooling stage 1, cooling stage 2, heat stage 1, heat stage 2, heat stage 3/ exhaust/ reversing valve/ dehumidify/ occupied.
8. Unit shall provide surge protection for the controller through a circuit breaker.
9. Shall be Internet capable, and communicate at a Baud rate of 38.4K or faster.
10. Shall have an LED display independently showing the status of activity on the communication bus, and processor operation.
11. Shall include an EIA-485 protocol communication port, an access port for connection of either a computer or a Carrier technician tool, an EIA-485 port for network communication to intelligent space sensors and displays, and a port to connect an optional LonWorks plug-in communications card.
12. Shall have built-in Carrier Comfort Network (CCN) protocol, and be compatible with other CCN devices, including ComfortLink and ComfortVIEW controllers.
13. Shall have built-in support for Carrier technician tool.
14. Software upgrades will be accomplished by local download. Software upgrades through chip replacements are not allowed.
15. Shall be shock resistant in all planes to 5G peak, 11ms during operation, and 100G peak, 11ms during storage.
16. Shall be vibration resistant in all planes to 1.5G @ 20-300 Hz.
17. Shall support a bus length of 4000 ft max, 60 devices per 1000 ft section, and 1 RS-485 repeater per 1000ft sections.

23 09 23.13.B. Open protocol, direct digital controller:

1. Shall be ASHRAE 62-2001 compliant.
2. Shall accept 18-30VAC, 50-60Hz, and consumer 15VA or less power.
3. Shall have an operating temperature range from -40°F (-40°C) to 130°F (54°C), 10% - 90% RH (non-condensing).
4. Shall include built-in protocol for BACNET (MS/TP and PTP modes), Modbus (RTU and ASCII), Johnson N2 and LonWorks. LonWorks Echelon processor required for all Lon applications shall be contained in separate communication board.
5. Shall allow access of up to 62 network variables (SNVT). Shall be compatible with all open controllers.
6. Baud rate Controller shall be selectable using a dipswitch.
7. Shall have an LED display independently showing the status of serial communication, running, errors, power, all digital outputs, and all analog inputs.
8. Shall accept the following inputs: space temperature, setpoint adjustment, outdoor air temperature, indoor air quality, outdoor air quality, compressor lock-out, fire shutdown, enthalpy switch, and fan status/filter status/ humidity/ remote occupancy.
9. Shall provide the following outputs: economizer, fan, cooling stage 1, cooling stage 2, heat stage 1, heat stage 2, heat stage 3/ exhaust/ reversing valve.
10. Shall have built-in surge protection circuitry through solid state polyswitches. Polyswitches shall be used on incoming power and network connections. Polyswitches will return to normal when the “trip” condition clears.
11. Shall have a battery back-up capable of a minimum of 10,000 hours of data and time clock retention during power outages.
12. Shall have built-in support for Carrier technician tool.
13. Shall include an EIA-485 protocol communication port, an access port for connection of either a computer or a Carrier technician tool, an EIA-485 port for network communication to intelligent space sensors and displays, and a port to connect an optional LonWorks communications card.
14. Software upgrades will be accomplished by either local or remote download. No software upgrades through chip replacements are allowed.

23 09 33 Electric and Electronic Control System for HVAC

23 09 33.13 Decentralized, Rooftop Units:

23 09 33.13.A. General:

1. Shall be complete with self-contained low-voltage control circuit protected by a resettable circuit breaker on the 24-v transformer side. Transformer shall have 75VA capability.
2. Shall utilize color-coded wiring.
3. Shall include a central control terminal board to conveniently and safely provide connection points for vital control functions such as: smoke detectors, phase monitor, economizer, thermostat, DDC control options, and low and high pressure switches.
4. Unit shall include a minimum of one 8-pin screw terminal connection board for connection of control wiring.

23 09 33.23.B. Safeties:

1. Compressor over-temperature, over current.
2. Low-pressure switch.
   a. Units with 2 compressors shall have different sized connectors for the circuit 1 and circuit 2 low and high pressure switches. They shall physically prevent the cross-wiring of the safety switches between circuits 1 and 2.
   b. Low pressure switch shall use different color wire than the high pressure switch. The purpose is to assist the installer and service technician to correctly wire and or troubleshoot the rooftop unit.
3. High-pressure switch.
   a. Units with 2 compressors shall have different sized connectors for the circuit 1 and circuit 2 low and high pressure switches. They shall physically prevent the cross-wiring of the safety switches between circuits 1 and 2.
   b. High pressure switch shall use different color wire than the low pressure switch. The purpose is to assist the installer and service technician to correctly wire and or troubleshoot the rooftop unit.
4. Automatic reset, motor thermal overload protector.

23 09 93 Sequence of Operations for HVAC Controls

23 09 93.13 Decentralized, Rooftop Units:

23 09 93.13 INSERT SEQUENCE OF OPERATION

23 40 13 Panel Air Filters

23 40 13.13 Decentralized, Rooftop Units:

23 40 13.13.A. Standard filter section

1. Shall consist of factory-installed, low velocity, throwaway 2-in. thick fiberglass filters of commercially available sizes.
2. Unit shall use only one filter size. Multiple sizes are not acceptable.
3. Filters shall be accessible through an access panel with “no-tool” removal as described in the unit cabinet section of this specification (23 81 19.13.H).

23 81 19 Self-Contained Air Conditioners

23 81 19.13 Small-Capacity Self-Contained Air Conditioners (50HC**04-14)

23 81 19.13.A. General

1. Outdoor, rooftop mounted, electrically controlled, heating and cooling unit utilizing a(n) hermetic scroll compressor(s) for cooling duty and gas combustion for heating duty.
2. Factory assembled, single-piece heating and cooling rooftop unit. Contained within the unit enclosure shall be all factory wiring, piping, controls, and special features required prior to field start-up.
3. Unit shall use environmentally safe, Puron® refrigerant.
4. Unit shall be installed in accordance with the manufacturer’s instructions.
5. Unit must be selected and installed in compliance with local, state, and federal codes.

23 81 19.13.B. Quality Assurance

1. Unit meets ASHRAE 90.1 minimum efficiency requirements.
2. 3 phase units are Energy Star qualified.
3. Unit shall be rated in accordance with AHRI Standards 210/240 and 340/360.
4. Unit shall be designed to conform to ASHRAE 15, 2001.
5. Unit shall be UL-tested and certified in accordance with ANSI Z21.47 Standards and UL-listed and certified under Canadian standards as a total package for safety requirements.
6. Insulation and adhesive shall meet NFPA 90A requirements for flame spread and smoke generation.
7. Unit casing shall be capable of withstanding 500-hour salt spray exposure per ASTM B117 (scribed specimen).
8. Unit casing shall be capable of withstanding Federal Test Method Standard No. 141 (Method 6061) 5000-hour salt spray.
9. Unit shall be designed in accordance with ISO 9001, and shall be manufactured in a facility registered by ISO 9001.
10. Roof curb shall be designed to conform to NRCA Standards.
11. Unit shall be subjected to a completely automated run test on the assembly line. The data for each unit will be stored at the factory, and must be available upon request.
12. Unit shall be designed in accordance with UL Standard 1995, including tested to withstand rain.
13. Unit shall be constructed to prevent intrusion of snow and tested to prevent snow intrusion into the control box up to 40 mph.
14. Unit shake tested to assurance level 1, ASTM D4169 to ensure shipping reliability.

15. High Efficient Motors listed shall meet section 313 of the Energy Independence and Security Act of 2007 (EISA 2007).

23 81 19.13.C. Delivery, Storage, and Handling

1. Unit shall be stored and handled per manufacturer's recommendations.
2. Lifted by crane requires either shipping top panel or spreader bars.
3. Unit shall only be stored or positioned in the upright position.

23 81 19.13.D. Project Conditions

1. As specified in the contract.

23 81 19.13.E. Project Conditions

1. As specified in the contract.

23 81 19.13.F. Operating Characteristics

1. Unit shall be capable of starting and running at 125°F (52°C) ambient outdoor temperature, meeting maximum load criteria of AHRI Standard 210/240 or 340/360 at ± 10% voltage.
2. Compressor with standard controls shall be capable of operation down to 35°F (2°C), ambient outdoor temperatures. Accessory low ambient kits shall be available if operation below 35°F (2°C), is required. See below for head pressure control package or winter start kit.
3. Unit shall discharge supply air vertically or horizontally as shown on contract drawings.
4. Unit shall be factory configured for vertical supply & return configurations.
5. Unit shall be field convertible from vertical to horizontal airflow on all models. No special kit required on 04-12 models. Supply duct kit required for 14 size model only.
6. Unit shall be capable of mixed operation: vertical supply with horizontal return or horizontal supply with vertical return.

23 81 19.13.G. Electrical Requirements

1. Main power supply voltage, phase, and frequency must match those required by the manufacturer.

23 81 19.13.H. Unit Cabinet

1. Unit cabinet shall be constructed of galvanized steel, and shall be bonderized and coated with a pre-painted baked enamel finish on all externally exposed surfaces.
2. Unit cabinet exterior paint shall be: film thickness, (dry) 0.003 inches minimum, gloss (per ASTM D523, 60°F): 60, Hardness: H-2H Pencil hardness.
3. Evaporator fan compartment interior cabinet insulation shall conform to AHRI Standards 210/240 or 340/360 minimum exterior sweat criteria. Interior surfaces shall be insulated with a minimum 1/2-in. thick, 1 lb density, flexible fiberglass insulation, neoprene coated on the air side. Aluminum foil-faced fiberglass insulation shall be used in the heat compartment.
4. Base of unit shall have a minimum of four locations for thru-the-base gas and electrical connections (factory installed or field installed), standard.
5. Base Rail
   a. Unit shall have base rails on a minimum of 2 sides.
   b. Holes shall be provided in the base rails for rigging shackles to facilitate maneuvering and overhead rigging.
   c. Holes shall be provided in the base rail for moving the rooftop by fork truck.
   d. Base rail shall be a minimum of 16 gauge thickness.
6. Condensate pan and connections:
   a. Shall be an internally sloped condensate drain pan made of a non-corrosive material.
   b. Shall comply with ASHRAE Standard 62.
   c. Shall use a 3/4" -14 NPT drain connection, possible either through the bottom or end of the drain pan. Connection shall be made per manufacturer's recommendations.
7. Top panel:
   a. Shall be a single piece top panel on 04 thru 12 sizes, two piece on 14 size.
8. Electrical Connections
   a. All unit power wiring shall enter unit cabinet at a single, factory-prepared, knockout location.
   b. Thru-the-base capability
      (1.) Standard unit shall have a thru-the-base electrical location(s) using a raised, embossed portion of the unit basepan.
      (2.) Optional, factory-approved, water-tight connection method must be used for thru-the-base electrical connections.
      (3.) No basepan penetration, other than those authorized by the manufacturer, is permitted.

9. Component access panels (standard)
   a. Cabinet panels shall be easily removable for servicing.
   b. Unit shall have one factory installed, tool-less, removable, filter access panel.
   c. Panels covering control box, indoor fan, indoor fan motor, gas components (where applicable), and compressors shall have molded composite handles.
   d. Handles shall be UV modified, composite, permanently attached, and recessed into the panel.
   e. Screws on the vertical portion of all removable access panel shall engage into heat resistant, molded composite collars.
   f. Collars shall be removable and easily replaceable using manufacturer recommended parts.

23 81 19.13.I. N/A

23 81 19.13.J. Coils

1. Standard Aluminum Fin/Copper Tube Coils:
   a. Standard evaporator and condenser coils shall have aluminum lanced plate fins mechanically bonded to seamless internally grooved copper tubes with all joints brazed.
   b. Evaporator coils shall be leak tested to 150 psig, pressure tested to 450 psig, and qualified to UL 1995 burst test at 1775 psig.
   c. Condenser coils shall be leak tested to 150 psig, pressure tested to 650 psig, and qualified to UL 1995 burst test at 1980 psig.
2. Optional Pre-coated aluminum-fin condenser coils (3 phase models only):
   a. Shall have a durable epoxy-phenolic coating to provide protection in mildly corrosive coastal environments.
   b. Coating shall be applied to the aluminum fin stock prior to the fin stamping process to create an inert barrier between the aluminum fin and copper tube.
   c. Epoxy-phenolic barrier shall minimize galvanic action between dissimilar metals.
3. Optional Copper-fin evaporator and condenser coils (3 phase models only):
   a. Shall be constructed of copper fins mechanically bonded to copper tubes and copper tube sheets.
   b. Galvanized steel tube sheets shall not be acceptable.
   c. A polymer strip shall prevent coil assembly from contacting the sheet metal coil pan to minimize potential for galvanic corrosion between coil and pan.
4. Optional E-coated aluminum-fin evaporator and condenser coils (3 phase models only):
   a. Shall have a flexible epoxy polymer coating uniformly applied to all coil surface areas without material bridging between fins.
   b. Coating process shall ensure complete coil encapsulation of tubes, fins and headers.
   c. Color shall be high gloss black with gloss per ASTM D523-89.
   d. Uniform dry film thickness from 0.8 to 1.2 mil on all surface areas including fin edges.
   e. Superior hardness characteristics of 2H per ASTM D3363-92A and cross-hatch adhesion of 4B-5B per ASTM D3359-93.
   f. Impact resistance shall be up to 160 in.-lb (ASTM D2794-93).
   g. Humidity and water immersion resistance shall be up to minimum 1000 and 250 hours respectively (ASTM D2247-92 and ASTM D870-92).
   h. Corrosion durability shall be confirmed through testing to be no less than 1000 hours salt spray per ASTM B117-90.
5. Optional E-coated aluminum-fin, aluminum tube condenser coils:
   a. Shall have a flexible epoxy polymer coating uniformly applied to all coil external surface areas without material bridging between fins or louvers.
   b. Coating process shall ensure complete coil encapsulation, including all exposed fin edges.
   c. E-coat thickness of 0.8 to 1.2 mil with top coat having a uniform dry film thickness from 1.0 to 2.0 mil on all external coil surface areas, including fin edges, shall be provided.
   d. Shall have superior hardness characteristics of 2H per ASTM D3363-00 and cross-hatch adhesion of 4B-5B per ASTM D3359-02.
   e. Shall have superior impact resistance with no cracking, chipping or peeling per NSF/ANSI 51-2002 Method 10.2.

23 81 19.13.K. Refrigerant Components

1. Refrigerant circuit shall include the following control, safety, and maintenance features:
   a. Thermostatic Expansion Valve (TXV) shall help provide optimum performance across the entire operating range. Shall contain removable power element to allow change out of power element and bulb without removing the valve body.
   b. Refrigerant filter drier.
   c. Service gauge connections on suction and discharge lines.
   d. Pressure gauge access through a specially designed access port in the top panel of the unit.
2. There shall be gauge line access port in the skin of the rooftop, covered by a black, removable plug.
   a. The plug shall be easy to remove and replace.
   b. When the plug is removed, the gauge access port shall enable maintenance personnel to route their pressure gauge lines.
   c. This gauge access port shall facilitate correct and accurate condenser pressure readings by enabling the reading with the compressor access panel on.
   d. The plug shall be made of a leak proof, UV-resistant, composite material.
3. Compressors
   a. Unit shall use one fully hermetic, scroll compressor for each independent refrigeration circuit.
   b. Models shall be available with single compressor/single stage cooling designs on 04-07 sizes and 2 compressor/2 stage cooling models on 08-14 sizes.
   c. Compressor motors shall be cooled by refrigerant gas passing through motor windings.
   d. Compressors shall be internally protected from high discharge temperature conditions.
   e. Compressors shall be protected from an over-temperature and over-amperage conditions by an internal, motor overload device.
   f. Compressor shall be factory mounted on rubber grommets.
   g. Compressor motors shall have internal line break thermal, current overload and high pressure differential protection.
   h. Crankcase heaters shall not be required for normal operating range, unless provided by the factory.

23 81 19.13.L. Filter Section

1. Filters access is specified in the unit cabinet section of this specification.
2. Filters shall be held in place by a pivoting filter tray, facilitating easy removal and installation.
3. Shall consist of factory-installed, low velocity, throw-away 2-in. thick fiberglass filters.
4. Filters shall be standard, commercially available sizes.
5. Only one size filter per unit is allowed.

23 81 19.13.M. Evaporator Fan and Motor

1. Evaporator fan motor:
   a. Shall have permanently lubricated bearings.
   b. Shall have inherent automatic-reset thermal overload protection or circuit breaker.
   c. Shall have a maximum continuous bhp rating for continuous duty operation; no safety factors above that rating shall be required.
2. Electric Drive (Direct Drive) X13 – 5 Speed/Torque Evaporator Fan:
   a. Multi speed motor with easy quick adjustment settings.
   b. Blower fan shall be double-inlet type with forward-curved blades.
   c. Shall be constructed from steel with a corrosion resistant finish and dynamically balanced.
   d. Standard on all 04-06 models with 208/230/1/60 operation without Humidi-MiZer.
   e. Standard on all 04-06 3-phase models without Humidi-MiZer, with optional belt drive.
3. Belt-driven Evaporator Fan:
   a. Belt drive shall include an adjustable-pitch motor pulley.
   b. Shall use sealed, permanently lubricated ball-bearing type.
   c. Blower fan shall be double-inlet type with forward-curved blades.
   d. Shall be constructed from steel with a corrosion resistant finish and dynamically balanced.
   e. Standard on all 04-07 size and 04-06 size models with Humidi-MiZer. Optional on all 04-06 3-phase models.

23 81 19.13.N. Condenser Fans and Motors

1. Condenser fan motors:
   a. Shall be a totally enclosed motor.
   b. Shall use permanently lubricated bearings.
   c. Shall have inherent thermal overload protection with an automatic reset feature.
   d. Shall use a shaft-down design on 04 to 14 models.
2. Condenser Fans:
   a. Shall be a direct-driven propeller type fan.
   b. Shall have aluminum blades riveted to corrosion-resistant steel spiders and shall be dynamically balanced.

23 81 19.13.O. Special Features, Options and Accessories

1. Integrated Economizers (Factory installed option on 3 phase models. Field installed on all 3 and 1 phase models):
   a. Integrated, gear-driven opposing modulating blade design type capable of simultaneous economizer and compressor operation.
   b. Independent modules for vertical or horizontal return configurations shall be available. Vertical return modules shall be available as a factory installed option.
   c. Damper blades shall be galvanized steel with composite gears. Plastic or composite blades on intake or return shall not be acceptable.
   d. Shall include all hardware and controls to provide free cooling with outdoor air when temperature and/or humidity are below setpoints.
   e. Shall be equipped with gear driven dampers for both the outdoor ventilation air and the return air for positive air stream control.
   f. Shall be equipped with low-leakage dampers, not to exceed 2% leakage at 1 in. wg pressure differential.
   g. Shall be capable of introducing up to 100% outdoor air.
   h. Shall be equipped with a barometric relief damper capable of relieving up to 100% return air.
   i. Shall be designed to close damper(s) during loss-of-power situations with spring return built into motor.
   j. Dry bulb outdoor-air temperature sensor shall be provided as standard. Outdoor air sensor setpoint shall be adjustable and shall range from 40 to 100°F / 4 to 38°C. Additional sensor options shall be available as accessories.
   k. The economizer controller shall also provide control of an accessory power exhaust unit. function. Factory set at 100%, with a range of 0% to 100%.
   l. The economizer shall maintain minimum airflow into the building during occupied period and provide design ventilation rate for full occupancy. A remote potentiometer may be used to override the damper setpoint.
   m. Dampers shall be completely closed when the unit is in the unoccupied mode.
   n. Economizer controller shall accept a 2-10Vdc CO_2 sensor input for IAQ/DCV control. In this mode, dampers shall modulate the outdoor-air damper to provide ventilation based on the sensor input.
   o. Compressor lockout sensor shall open at 35°F (2°C) and close closes at 50°F (10°C).
   p. Actuator shall be direct coupled to economizer gear. No linkage arms or control rods shall be acceptable.
   q. Economizer controller shall provide indications when in free cooling mode, in the DCV mode, or the exhaust fan contact is closed.
2. Two-Position Damper (Factory installed option on 3 phase models. Field installed on all 3 and 1 phase models)
   a. Damper shall be a Two-Position Damper. Damper travel shall be from the full closed position to the field adjustable %-open setpoint.
   b. Damper shall include adjustable damper travel from 25% to 100% (full open).
   c. Damper shall include single or dual blade, gear driven dampers and actuator motor.
   d. Actuator shall be direct coupled to damper gear. No linkage arms or control rods shall be acceptable.
   e. Damper will admit up to 100% outdoor air for applicable rooftop units.
   f. Damper shall close upon indoor (evaporator) fan shutoff and/or loss of power.
   g. The damper actuator shall plug into the rooftop unit's wiring harness plug. No hard wiring shall be required.
   h. Outside air hood shall include aluminum water entrainment filter
3. Manual damper
   a. Manual damper package shall consist of damper, air inlet screen, and rain hood which can be preset to admit up to 50% outdoor air for year round ventilation.

4. Humidi-MiZer Adaptive Dehumidification System (3 phase models only):
   a. The Humidi-MiZer Adaptive Dehumidification System shall be factory-installed and shall provide greater dehumidification of the occupied space by two modes of dehumidification operations beside its normal design cooling mode:
   (1.) Subcooling mode further subcools the hot liquid refrigerant leaving the condenser coil when both temperature and humidity in the space are not satisfied.
   (2.) Hot gas reheat mode shall mix a portion of the hot gas from the discharge of the compressor with the hot liquid refrigerant leaving the condenser coil to create a two-phase heat transfer in the system, resulting in a neutral leaving- air temperature when only humidity in the space is not satisfied.
   (3.) Includes Head Pressure Controller.
5. Head Pressure Control Package
   a. Controller shall control coil head pressure by condenser-fan speed modulation or condenser-fan cycling and wind baffles.
   b. Shall consist of solid-state control and condenser-coil temperature sensor to maintain condensing temperature between 90°F (32°C) and 110°F (43°C) at outdoor ambient temperatures down to -20°F (-29°C).
6. Condenser Coil Hail Guard Assembly (Factory installed option on 3 phase models. Field installed on all 3 and 1 phase models)
   a. Shall protect against damage from hail.
   b. Shall be louvered design.
7. Unit-Mounted, Non-Fused Disconnect Switch:
   a. Switch shall be factory-installed, internally mounted.
   b. National Electric Code (NEC) and UL approved non-fused switch shall provide unit power shutoff.
   c. Shall be accessible from outside the unit
   d. Shall provide local shutdown and lockout capability.
8. Convenience Outlet:
   a. Powered convenience outlet (3 phase models only).
      (1.) Outlet shall be powered from main line power to the rooftop unit.
      (2.) Outlet shall be powered from line side or load side of disconnect by installing contractor, as required by code. If outlet is powered from load side of disconnect, unit electrical ratings shall be UL certified and rated for additional outlet amperage.
      (3.) Outlet shall be factory-installed and internally mounted with easily accessible 115-v female receptacle.
      (4.) Outlet shall include 15 amp GFI receptacles with independent fuse protection.
      (5.) Voltage required to operate convenience outlet shall be provided by a factory-installed step-down transformer.
      (6.) Outlet shall be accessible from outside the unit.
      (7.) Outlet shall include a field-installed “Wet in Use” cover.
   b. Non-Powered convenience outlet.
      (1.) Outlet shall be powered from a separate 115/120v power source.
      (2.) A transformer shall not be included.
      (3.) Outlet shall be factory-installed and internally mounted with easily accessible 115-v female receptacle.
      (4.) Outlet shall include 15 amp GFI receptacles with independent fuse protection.
      (5.) Outlet shall be accessible from outside the unit.
      (6.) Outlet shall include a field-installed “Wet in Use” cover.
9. Thru-the-Base Connectors:
   a. Kits shall provide connectors to permit electrical connections to be brought to the unit through the unit basepan.
   b. Minimum of four connection locations per unit.
10. Propeller Power Exhaust:
   a. Power exhaust shall be used in conjunction with an integrated economizer.
   b. Independent modules for vertical or horizontal return configurations shall be available.
   c. Horizontal power exhaust is shall be mounted in return ductwork.
   d. Power exhaust shall be controlled by economizer controller operation. Exhaust fans shall be energized when dampers open past the 0-100% adjustable setpoint on the economizer control.

11. Roof Curbs (Vertical):
    a. Full perimeter roof curb with exhaust capability providing separate air streams for energy recovery from the exhaust air without supply air contamination.
    b. Formed galvanized steel with wood nailer strip and shall be capable of supporting entire unit weight.
    c. Permits installation and securing of ductwork to curb prior to mounting unit on the curb.
12. High-Static Indoor Fan Motor(s) and Drive(s):
    a. High-static motor(s) and drive(s) shall be factory-installed to provide additional performance range.
13. Condenser Coil Grille:
    a. Shall protect against damage from hail.
    b. Shall be of louvered style.
14. Thru-the-Bottom Utility Connectors:
    a. Kit shall provide connectors to permit gas and electrical connections to be brought to the unit through the basepan.
15. Outdoor Air Enthalpy Sensor:
    a. The outdoor air enthalpy sensor shall be used to provide single enthalpy control. When used in conjunction with a return air enthalpy sensor, the unit will provide differential enthalpy control. The sensor allows the unit to determine if outside air is suitable for free cooling.
16. Return Air Enthalpy Sensor:
    a. The return air enthalpy sensor shall be used in conjunction with an outdoor air enthalpy sensor to provide differential enthalpy control.
17. Indoor Air Quality (CO_2) Sensor:
    a. Shall be able to provide demand ventilation indoor air quality (IAQ) control.
    b. The IAQ sensor shall be available in duct mount, wall mount, or wall mount with LED display. The setpoint shall have adjustment capability.
18. Smoke detectors (factory-installed only):
    a. Shall be a Four-Wire Controller and Detector.
    b. Shall be environmental compensated with differential sensing for reliable, stable, and drift-free sensitivity.
    c. Shall use magnet-activated test/reset sensor switches.
    d. Shall have tool-less connection terminal access.
    e. Shall have a recessed momentary switch for testing and resetting the detector.
    f. Controller shall include:
        (1.) One set of normally open alarm initiation contacts for connection to an initiating device circuit on a fire alarm control panel.
        (2.) Two Form-C auxiliary alarm relays for interface with rooftop unit or other equipment.
        (3.) One Form-C supervision (trouble) relay to control the operation of the Trouble LED on a remote test/reset station.
        (4.) Capable of direct connection to two individual detector modules.
        (5.) Can be wired to up to 14 other duct smoke detectors for multiple fan shutdown applications.
19. Winter start kit
    a. Shall contain a bypass device around the low pressure switch.
    b. Shall be required when mechanical cooling is required down to 25°F (-4°C).
    c. Shall not be required to operate on an economizer when below an outdoor ambient of 40°F (4°C).
20. Time Guard
    a. Shall prevent compressor short cycling by providing a 5-minute delay (±2 minutes) before restarting a compressor after shutdown for any reason.
    b. One device shall be required per compressor.
21. Electric Heat:
    a. Heating Section
        (1.) Heater element open coil resistance wire, nickel-chrome alloy, 0.29 inches inside diameter, strung through ceramic insulators mounted on metal frame. Coil ends are staked and welded to terminal screw slots.
        (2.) Heater assemblies are provided with integral fusing for protection of internal heater circuits not exceeding 48 amps each. Auto reset thermo limit controls, magnetic heater contactors (24 v coil) and terminal block all mounted in electric heater control box (minimum 18 ga galvanized steel) attached to end of heater assembly.

22. Hinged access panels:
    a. Shall provide easy access through integrated quarter turn latches.
    b. Shall be on major panels of; filter, control box, fan motor and compressor.

Copyright 2011 Carrier Corp. • 7310 W. Morris St. • Indianapolis, IN 46231 Printed in U.S.A. Edition Date: 08/11 **Catalog No: 50HC−11PD**

Manufacturer reserves the right to change, at any time, specifications and designs without notice and without obligations. Replaces: 50HC−08PD