50LC*D07–D12
Nominal 6 to 10 Tons
With Puron® (R–410A) Refrigerant

Carrier
turn to the experts

Service and Maintenance Instructions

TABLE OF CONTENTS

SAFETY CONSIDERATIONS 1
UNIT ARRANGEMENT AND ACCESS 2
SUPPLY FAN (BLOWER) SECTION 3
COOLING 5
PURON® (R-410A) REFRIGERANT 7
COOLING CHARGING CHARTS 9
CONVENIENCE OUTLETS 15
SMOKE DETECTORS 16
PROTECTIVE DEVICES 23
ELECTRIC HEATERS 24
WIRING DIAGRAMS 27
HACR 34
ISC BOARD 37
ECONOMI$ER X (FACTORY-INSTALLED) 39
ECONOMIZER CONTROL CONFIGURATIONS . . . 46
VARIABLE FREQUENCY DRIVE (VFD) 60
PRE-START-UP 82
START-UP, GENERAL 82
FASTENER TORQUE VALUES 83
MODEL NUMBER SIGNIFICANCE 84
SEQUENCE OF OPERATION 85
PHYSICAL DATA 87
GENERAL FAN PERFORMANCE 93
START-UP CHECKLIST 100

SAFETY CONSIDERATIONS

Installation and servicing of air-conditioning equipment can be hazardous due to system pressure and electrical components. Only trained and qualified service personnel should install, repair, or service air-conditioning equipment. Untrained personnel can perform the basic maintenance functions of replacing filters. Trained service personnel should perform all other operations.

When working on air-conditioning equipment, observe precautions in the literature, tags and labels attached to the unit, and other safety precautions that may apply. Follow all safety codes. Wear safety glasses and work gloves. Use quenching cloth for unbrazing operations. Have fire extinguishers available for all brazing operations.

Follow all safety codes. Wear safety glasses and work gloves. Use quenching cloth for brazing operations. Have fire extinguisher available. Read these instructions thoroughly and follow all warnings or cautions attached to the unit. Consult local building codes and National Electrical Code (NEC) for special requirements.

Recognize safety information. This is the safety-alert symbol ⚠. When you see this symbol on the unit and in instructions or manuals, be alert to the potential for personal injury.

Understand the signal words DANGER, WARNING, and CAUTION. These words are used with the safety-alert symbol. DANGER identifies the most serious hazards which **will** result in severe personal injury or death. WARNING signifies a hazard which **could** result in personal injury or death. CAUTION is used to identify unsafe practices which **may** result in minor personal injury or product and property damage. NOTE is used to highlight suggestions which **will** result in enhanced installation, reliability, or operation.

⚠ WARNING

ELECTRICAL OPERATION HAZARD

Failure to follow this warning could result in personal injury or death.

Before performing service or maintenance operations on unit, turn off main power switch to unit. Electrical shock and rotating equipment could cause injury.

⚠ WARNING

ELECTRICAL OPERATION HAZARD

Failure to follow this warning could result in personal injury or death.

Units with convenience outlet circuits may use multiple disconnects. Check convenience outlet for power status before opening unit for service. Locate its disconnect switch, if appropriate, and open it. Tag-out this switch, if necessary.

⚠ WARNING

UNIT OPERATION AND SAFETY HAZARD

Failure to follow this warning could cause personal injury, death and/or equipment damage.

Puron® (R-410A) refrigerant systems operate at higher pressures than standard R-22 systems. Do not use R-22 service equipment or components on Puron refrigerant equipment.

⚠ CAUTION

CUT HAZARD

Failure to follow this caution may result in personal injury.

Sheet metal parts may have sharp edges or burrs. Use care and wear appropriate protective clothing, safety glasses and gloves when handling parts and servicing air conditioning units.

UNIT ARRANGEMENT AND ACCESS

General

Fig. 1 and Fig. 2 show general unit arrangement and access locations.

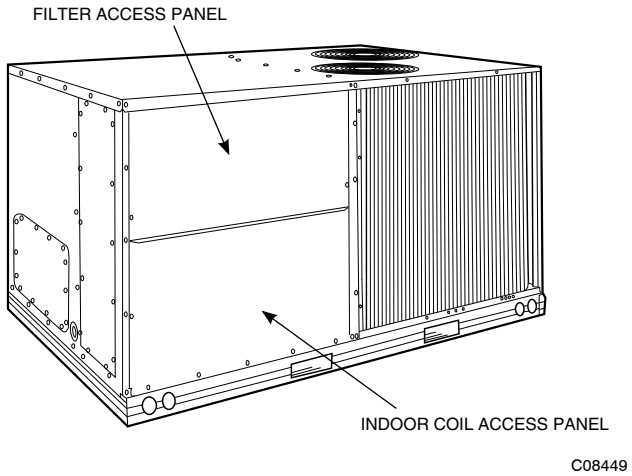

Fig. 1 - Typical Access Panel Locations (Rear)

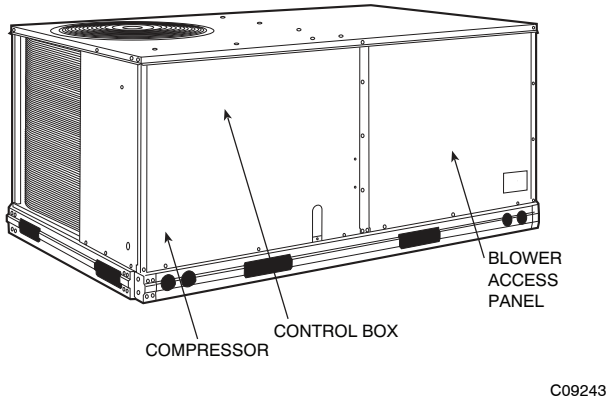

Fig. 2 - Typical Access Panel Locations (Front)

Routine Maintenance

These items should be part of a routine maintenance program, to be checked every month or two, until a specific schedule for each can be identified for this installation:

Quarterly Inspection (and 30 days after initial start)

- Return air filter replacement
- Outdoor hood inlet filters cleaned
- Belt tension checked
- Belt condition checked
- Pulley alignment checked
- Fan shaft bearing locking collar tightness checked
- Condenser coil cleanliness checked
- Condensate drain checked

Seasonal Maintenance

These items should be checked at the beginning of each season (or more often if local conditions and usage patterns dictate):

Air Conditioning

- Condenser fan motor mounting bolts tightness
- Compressor mounting bolts
- Condenser fan blade positioning
- Control box cleanliness and wiring condition
- Wire terminal tightness

- Refrigerant charge level
- Evaporator coil cleaning
- Evaporator blower motor amperage

Heating

- Power wire connections
- Fuses ready
- Manual-reset limit switch is closed

Economizer or Outside Air Damper

- Inlet filters condition
- Check damper travel (economizer)
- Check gear and dampers for debris and dirt

Air Filters and Screens

Each unit is equipped with return air filters. If the unit has an economizer, it will also have an outside air screen. If a manual outside air damper is added, an inlet air screen will also be present.

Each of these filters and screens will need to be periodically replaced or cleaned.

Return Air Filters

Return air filters are disposable fiberglass media type. Access to the filters is through the small lift-out panel located on the rear side of the unit, above the evaporator/return air access panel. (See Fig. 1.)

To remove the filters:

1. Grasp the bottom flange of the upper panel.
2. Lift up and swing the bottom out until the panel disengages and pulls out.
3. Reach inside and extract the filters from the filter rack.
4. Replace these filters as required with similar replacement filters of same size.

To re-install the access panel:

1. Slide the top of the panel up under the unit top panel.
2. Slide the bottom into the side channels.
3. Push the bottom flange down until it contacts the top of the lower panel (or economizer top).

IMPORTANT: DO NOT OPERATE THE UNIT WITHOUT THESE FILTERS!

Outside Air Hood

Outside air hood inlet screens are permanent aluminum-mesh type filters. Check these for cleanliness. Remove the screens when cleaning is required. Clean by washing with hot low-pressure water and soft detergent and replace all screens before restarting the unit. Observe the flow direction arrows on the side of each filter frame.

Economizer Inlet Air Screen

This air screen is retained by spring clips under the top edge of the hood. (See Fig. 3.)

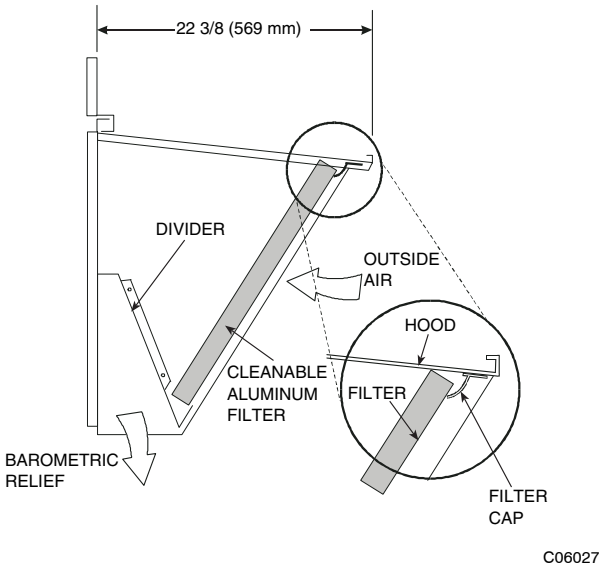

Fig. 3 - Filter Installation

To remove the filter, open the spring clips. Re-install the filter by placing the frame in its track, then closing the spring clips.

Manual Outside Air Hood Screen

This inlet screen is secured by a retainer angle across the top edge of the hood. (See Fig. 4.)

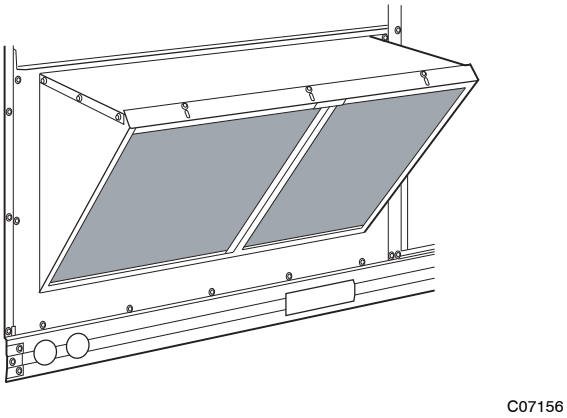

Fig. 4 - Screens Installed on Outdoor-Air Hood

To remove the screen, loosen the screws in the top retainer and slip the retainer up until the filter can be removed. Re-install by placing the frame in its track, rotating the retainer back down and tighten all screws.

SUPPLY FAN (BLOWER) SECTION

⚠ WARNING

ELECTRICAL SHOCK HAZARD

Failure to follow this warning could cause personal injury or death.

Before performing service or maintenance operations on the fan system, shut off all unit power and tag-out the unit disconnect switch. Do not reach into the fan section with power still applied to unit.

Supply Fan (Belt-Drive)

The supply fan system consists of a forward-curved centrifugal blower wheel on a solid shaft with two concentric type bearings, one on each side of the blower housing. A fixed-pitch driven pulley is attached to the fan shaft and an adjustable-pitch driver pulley is on the motor. The pulleys are connected using a "V" type belt. (See Fig. 5.)

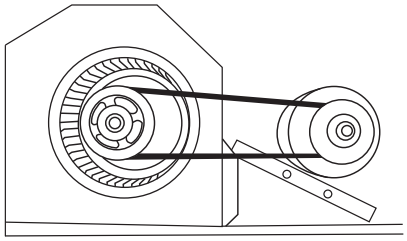

C07087

Fig. 5 - Belt Drive Motor Mounting

Belt

Check the belt condition and tension quarterly. Inspect the belt for signs of cracking, fraying or glazing along the inside surfaces. Check belt tension by using a spring-force tool (such as Browning's Part Number "Belt Tension Checker" or equivalent tool); tension should be 6-lbs at a 5/8-in. deflection when measured at the centerline of the belt span. This point is at the center of the belt when measuring the distance between the motor shaft and the blower shaft.

NOTE: Without the spring-tension tool, place a straight edge across the belt surface at the pulleys, then deflect the belt at mid-span using one finger to a 1/2-in. deflection.

Adjust belt tension by loosening the motor mounting plate front bolts and rear bolt and sliding the plate toward the fan (to reduce tension) or away from fan (to increase tension). Ensure the blower shaft and the motor shaft are parallel to each other (pulleys aligned). Tighten all bolts when finished.

To replace the belt:

1. Use a belt with same section type or similar size. Do not substitute a "FHP" type belt. When installing the new belt, do not use a tool (screwdriver or pry-bar) to force the belt over the pulley flanges, this will stress the belt and cause a reduction in belt life.
2. Loosen the motor mounting plate front bolts and rear bolts.
3. Push the motor and its mounting plate towards the blower housing as close as possible to reduce the center distance between fan shaft and motor shaft.
4. Remove the belt by gently lifting the old belt over one of the pulleys.
5. Install the new belt by gently sliding the belt over both pulleys and then sliding the motor and plate away from the fan housing until proper tension is achieved.
6. Check the alignment of the pulleys, adjust if necessary.
7. Tighten all bolts.
8. Check the tension after a few hours of runtime and re-adjust as required.

Adjustable-Pitch Pulley on Motor

The motor pulley is an adjustable-pitch type that allows a servicer to implement changes in the fan wheel speed to match as-installed ductwork systems. The pulley consists of a fixed flange side that faces the motor (secured to the motor shaft) and a movable flange side that can be rotated around the fixed flange side that increases or reduces the pitch diameter of this driver pulley. (See Fig. 6.)

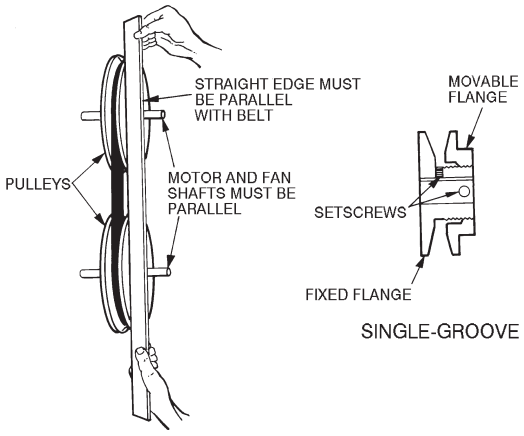

C07075

Fig. 6 - Supply-Fan Pulley Adjustment

As the pitch diameter is changed by adjusting the position of the movable flange, the centerline on this pulley shifts laterally (along the motor shaft). This creates a requirement for a realignment of the pulleys after any adjustment of the movable flange. Also reset the belt tension after each realignment.

Check the condition of the motor pulley for signs of wear. Glazing of the belt contact surfaces and erosion on these surfaces are signs of improper belt tension and/or belt slippage. Pulley replacement may be necessary.

To change fan speed:

1. Shut off unit power supply.
2. Loosen belt by loosening fan motor mounting nuts. (See Fig. 5.)
3. Loosen movable pulley flange setscrew. (See Fig. 6.)
4. Screw movable flange toward fixed flange to increase speed and away from fixed flange to decrease speed. Increasing fan speed increases load on motor. Do not exceed maximum speed specified.
5. Set movable flange at nearest keyway of pulley hub and tighten setscrew to torque specifications.

To align fan and motor pulleys:

1. Loosen fan pulley setscrews.
2. Slide fan pulley along fan shaft. Make angular alignment by loosening motor from mounting.
3. Tighten fan pulley setscrews and motor mounting bolts to torque specifications.
4. Recheck belt tension.

Bearings

This fan system uses bearings featuring concentric split locking collars. The collars are tightened through a cap screw bridging the split portion of the collar. The cap screw has a Torx T25 socket head. To tighten the locking collar, hold the locking collar tightly against the inner race of the bearing and torque the cap screw to 65-70 in-lb (7.4-7.9 Nm). (See Fig. 7.)

C08121

Fig. 7 - Tightening Locking Collar

Motor

When replacing the motor, also replace the external-tooth lock washer (star washer) under the motor mounting base; this is part of the motor grounding system. Ensure the teeth on the lock washer are in contact with the motor's painted base. Tighten motor mounting bolts to 120 +/- 12 in-lbs.

Changing Fan Wheel Speed by Changing Pulleys

The horsepower rating of the belt is primarily dictated by the pitch diameter of the smaller pulley in the drive system (typically the motor pulley in these units). Do not install a replacement motor pulley with a smaller pitch diameter than provided on the original factory pulley. Change fan wheel speed by changing the fan pulley (larger pitch diameter to reduce wheel speed, smaller pitch diameter to increase wheel speed) or select a new system (both pulleys and matching belt(s)).

Before changing pulleys to increase fan wheel speed, check the fan performance at the target speed and airflow rate to determine new motor loading (bhp). Use the fan performance tables or use the Packaged Rooftop Builder software program. Confirm that the motor in this unit is capable of operating at the new operating condition. Fan shaft loading increases dramatically as wheel speed is increased.

To reduce vibration, replace the motor's adjustable pitch pulley with a fixed pitch pulley (after the final airflow balance adjustment). This will reduce the amount of vibration generated by the motor/belt-drive system.

COOLING

⚠ WARNING

UNIT OPERATION AND SAFETY HAZARD

Failure to follow this warning could cause personal injury, death and/or equipment damage.

This system uses Puron® refrigerant which has higher pressures than R-22 and other refrigerants. No other refrigerant may be used in this system. Gauge set, hoses, and recovery system must be designed to handle Puron refrigerant. If unsure about equipment, consult the equipment manufacturer.

Evaporator Coil

The evaporator coil is traditional round-tube, plate-fin technology. Tube and fin construction is of various optional materials and coatings (see Model Number Format). Coils are multiple-row.

Coil Maintenance and Cleaning Recommendation

Routine cleaning of coil surfaces is essential to maintain proper operation of the unit. Elimination of contamination and removal of harmful residues will greatly increase the life of the coil and extend the life of the unit. The following maintenance and cleaning procedures are recommended as part of the routine maintenance activities to extend the life of the coil.

Remove Surface Loaded Fibers

Surface loaded fibers or dirt should be removed with a vacuum cleaner. If a vacuum cleaner is not available, a soft non-metallic bristle brush may be used. In either case, the tool should be applied in the direction of the fins. Coil surfaces can be easily damaged (fin edges can be easily bent over and damage to the coating of a protected coil) if the tool is applied across the fins.

NOTE: Use of a water stream, such as a garden hose, against a surface loaded coil will drive the fibers and dirt into the coil. This will make cleaning efforts more difficult. Surface loaded fibers must be completely removed prior to using low velocity clean water rinse.

Periodic Clean Water Rinse

A periodic clean water rinse is very beneficial for coils that are applied in coastal or industrial environments. However, it is very important that the water rinse is made with very low velocity water stream to avoid damaging the fin edges. Monthly cleaning as described below is recommended.

Routine Cleaning of Evaporator Coil Surfaces

Monthly cleaning with Totaline® environmentally sound coil cleaner is essential to extend the life of coils. This cleaner is available from Carrier Replacement parts division as part number P902-0301 for one gallon container, and part number P902-0305 for a 5 gallon container. It is recommended that all round tube coil cleaner as described below. Coil cleaning should be part of the unit's regularly scheduled maintenance procedures

to ensure long life of the coil. Failure to clean the coils may result in reduced durability in the environment.

Avoid the use of

- coil brighteners
- acid cleaning prior to painting
- high pressure washers
- poor quality water for cleaning

Totaline environmentally sound coil cleaner is non-flammable, hypoallergenic, non-bacterial, and a USDA accepted biodegradable agent that will not harm coil or surrounding components such as electrical wiring, painted metal surfaces, or insulation. Use of non-recommended coil cleaners is strongly discouraged since coil and unit durability could be affected.

Totaline Environmentally Sound Coil Cleaner Application Equipment

- 2-1/2 gallon garden sprayer
- water rinse with low velocity spray nozzle

⚠ CAUTION

PERSONAL INJURY HAZARD

Failure to follow this caution may result in corrosion and damage to the unit.

Harsh chemicals, household bleach or acid or basic cleaners should not be used to clean outdoor or indoor coils of any kind. These cleaners can be very difficult to rinse out of the coil and can accelerate corrosion at the fin/tube interface where dissimilar materials are in contact. If there is dirt below the surface of the coil, use the Totaline environmentally sound coil cleaner as described above.

⚠ CAUTION

PERSONAL INJURY HAZARD

Failure to follow this caution may result in reduced unit performance.

High velocity water from a pressure washer, garden hose, or compressed air should never be used to clean a coil. The force of the water or air jet will bend the fin edges and increase airside pressure drop.

Totaline® Environmentally Sound Coil Cleaner Application Instructions

1. Proper eye protection such as safety glasses is recommended during mixing and application.
2. Remove all surface loaded fibers and dirt with a vacuum cleaner as described above.
3. Thoroughly wet finned surfaces with clean water and a low velocity garden hose, being careful not to bend fins.
4. Mix Totaline environmentally sound coil cleaner in a 2-1/2 gallon garden sprayer according to the instructions included with the cleaner. The optimum solution temperature is 100°F (38°C).

NOTE: Do NOT USE water in excess of 130°F (54°C), as the enzymatic activity will be destroyed.

5. Thoroughly apply Totaline environmentally sound coil cleaner solution to all coil surfaces including finned area, tube sheets and coil headers.
6. Hold garden sprayer nozzle close to finned areas and apply cleaner with a vertical, up-and-down motion. Avoid spraying in horizontal pattern to minimize potential for fin damage.
7. Ensure cleaner thoroughly penetrates deep into finned areas.
8. Interior and exterior finned areas must be thoroughly cleaned.
9. Finned surfaces should remain wet with cleaning solution for 10 minutes.
10. Ensure surfaces are not allowed to dry before rinsing. Reapply cleaner as needed to ensure 10-minute saturation is achieved.
11. Thoroughly rinse all surfaces with low velocity clean water using downward rinsing motion of water spray nozzle. Protect fins from damage from the spray nozzle.

Evaporator Coil Metering Devices

These units use thermal expansion valves (TXV).

Refrigerant System Pressure Access Ports

There are two access ports in each system - on the suction tube near the compressor and on the discharge tube near the compressor. These are brass fittings with black plastic caps. The hose connection fittings are standard 1/4 SAE Male Flare couplings.

The brass fittings are two-piece High Flow valves, with a receptacle base brazed to the tubing and an integral spring-closed check valve core screwed into the base. (See Fig. 8.) This check valve is permanently assembled into this core body and cannot be serviced separately. Replace the entire core body if necessary. Service tools are available from RCD that allow the replacement of the check valve core without having to recover the entire system refrigerant charge. Apply compressor refrigerant oil to the check valve core's bottom O-ring. Install the fitting body with 96 +/ -10 in-lbs of torque; do not overtighten.

PURON® (R-410A) REFRIGERANT

This unit is designed for use with Puron (R-410A) refrigerant. Do not use any other refrigerant in this system.

Puron (R-410A) refrigerant is provided in pink (rose) colored cylinders. These cylinders are available with and without dip tubes; cylinders with dip tubes will have a label indicating this feature. For a cylinder with a dip tube, place the cylinder in the upright position (access valve at the top) when removing liquid refrigerant for charging. For a cylinder without a dip tube, invert the cylinder (access valve on the bottom) when removing liquid refrigerant.

Because Puron (R-410A) refrigerant is a blend, it is strongly recommended that refrigerant always be removed from the cylinder as a liquid. Admit liquid refrigerant into the system in the discharge line. If adding refrigerant into the suction line, use a commercial metering/expansion device at the gauge manifold. Remove liquid from the cylinder, pass it through the metering device at the gauge set and then pass it into the suction line as a vapor. Do not remove Puron (R-410A) refrigerant from the cylinder as a vapor.

Refrigerant Charge

Amount of refrigerant charge is listed on the unit's nameplate. Refer to Carrier GTAC2-5 Charging, Recovery, Recycling and Reclamation training manual and the following procedures.

Unit panels must be in place when unit is operating during the charging procedure.

No Charge

Use standard evacuating techniques. After evacuating system, weigh in the specified amount of refrigerant.

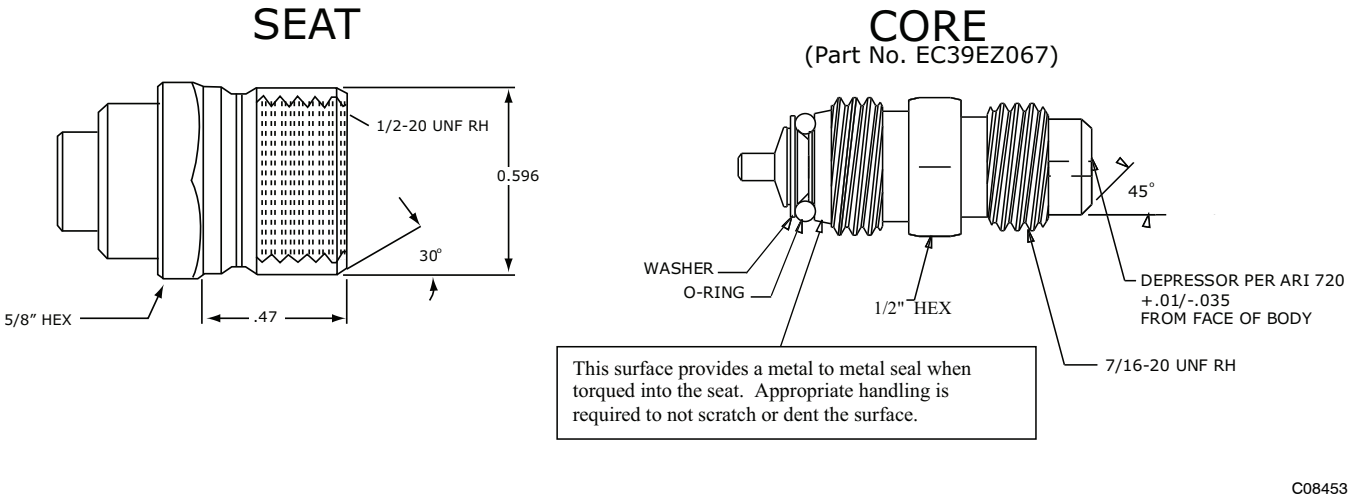

Fig. 8 - CoreMax Access Port Assembly

Low-Charge Cooling

Using Cooling Charging Charts (Figs. 9, 10, 11, and 12.), vary refrigerant until the conditions of the appropriate chart are met. Note the charging charts are different from the type normally used. Charts are based on charging the units to the correct subcooling for the various operating conditions. Accurate pressure gauge and temperature sensing device are required. Connect the pressure gauge to the service port on the discharge line. Mount the temperature sensing device on the liquid line leaving the condenser coil and insulate it so that outdoor ambient temperature does not affect the reading. Indoor-air cfm must be within the normal operating range of the unit.

LC D 07-14 Charging

To prepare the unit for charge adjustment:
Disable/bypass all head pressure controls. Start/run both compressors. On sizes 08 and 12, ensure both condenser fans are running.

To Use Cooling Charging Charts

Select the appropriate unit charging chart from Figs. 9, 10, 11, and 12.

Take the liquid-line temperature and read the discharge pressure gauge. Refer to chart to determine what liquid-line temperature should be. If liquid-line temperature is high, add refrigerant. If liquid-line temperature is low, carefully recover some of the charge. Recheck the discharge pressure as charge is adjusted.

EXAMPLE:

Model 50LC*D14

Circuit 1:

Outdoor Temperature . . . . . 85°F (29°C)

Discharge Pressure . . . . . 350 psig (2413 kPa)

Compressors

Lubrication

Compressors are charged with the correct amount of oil at the factory.

⚠ CAUTION

UNIT DAMAGE HAZARD

Failure to follow this caution may result in damage to components.

The compressor is in a Puron® refrigerant system and uses a polyolester (POE) oil. This oil is extremely hygroscopic, meaning it absorbs water readily. POE oils can absorb 15 times as much water as other oils designed for HCFC and CFC refrigerants. Avoid exposure of the oil to the atmosphere.

Replacing Compressor

The compressor used with Puron refrigerant contains a POE oil. This oil has a high affinity for moisture. Do not remove the compressor's tube plugs until ready to insert the unit suction and discharge tube ends.

Compressor mounting bolt torque is 65-75 in-lbs (7.3-8.5 Nm).

COOLING CHARGING CHARTS

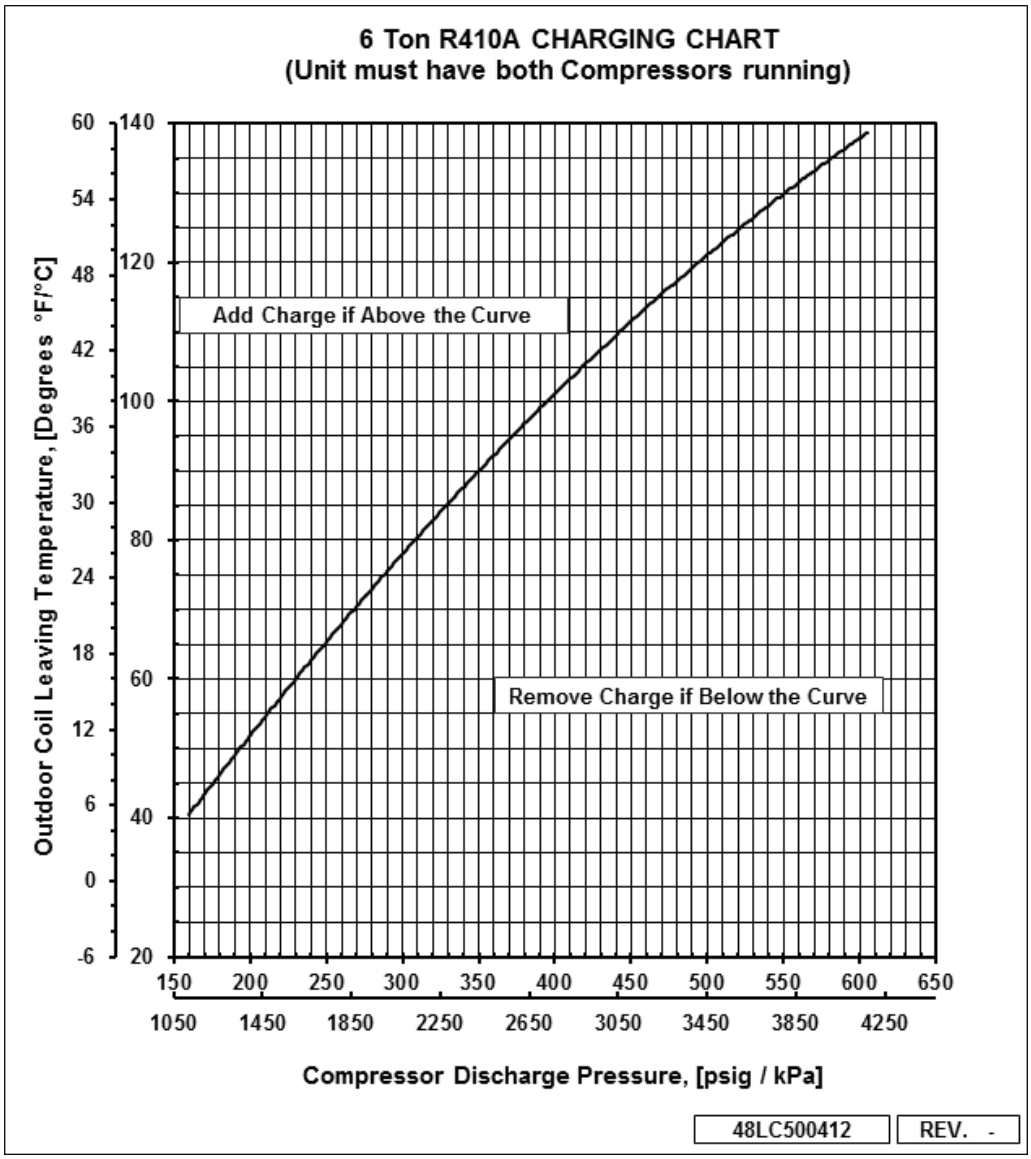

C13377

Fig. 9 – Cooling Charging Charts (07)

COOLING CHARGING CHARTS

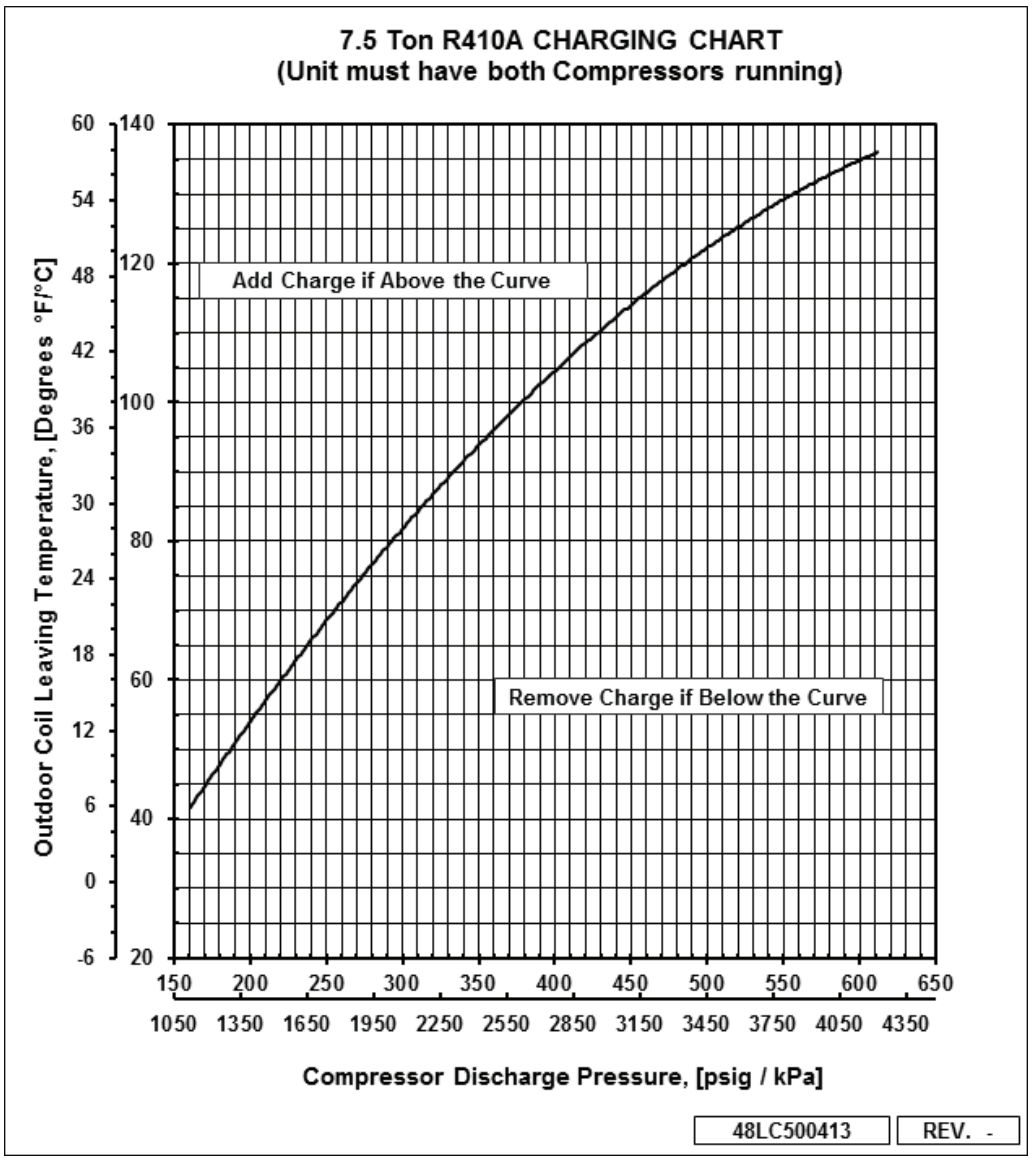

C13378

Fig. 10 - Cooling Charging Charts (08)

COOLING CHARGING CHARTS

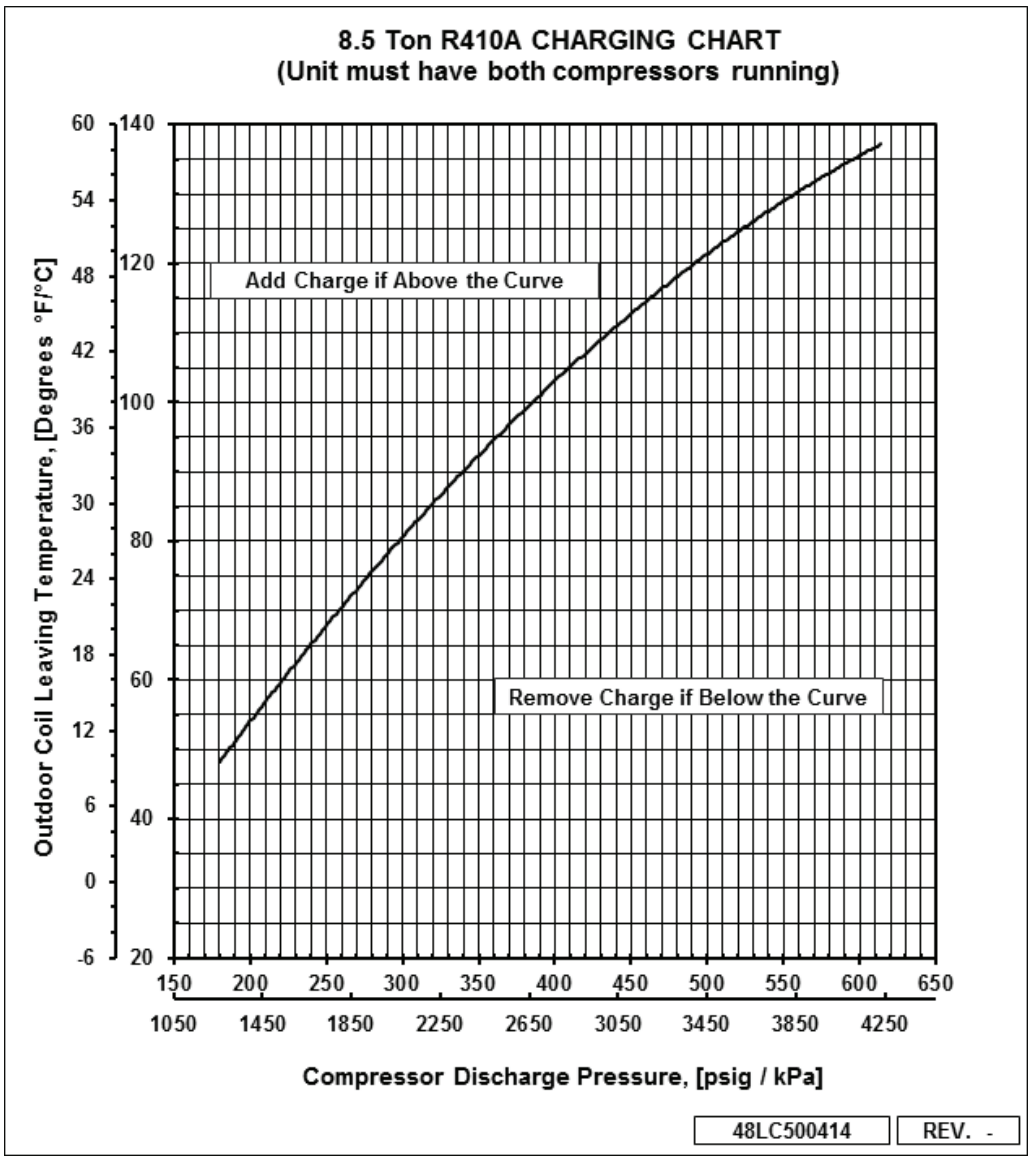

C13379

Fig. 11 - Cooling Charging Charts (09)

COOLING CHARGING CHARTS

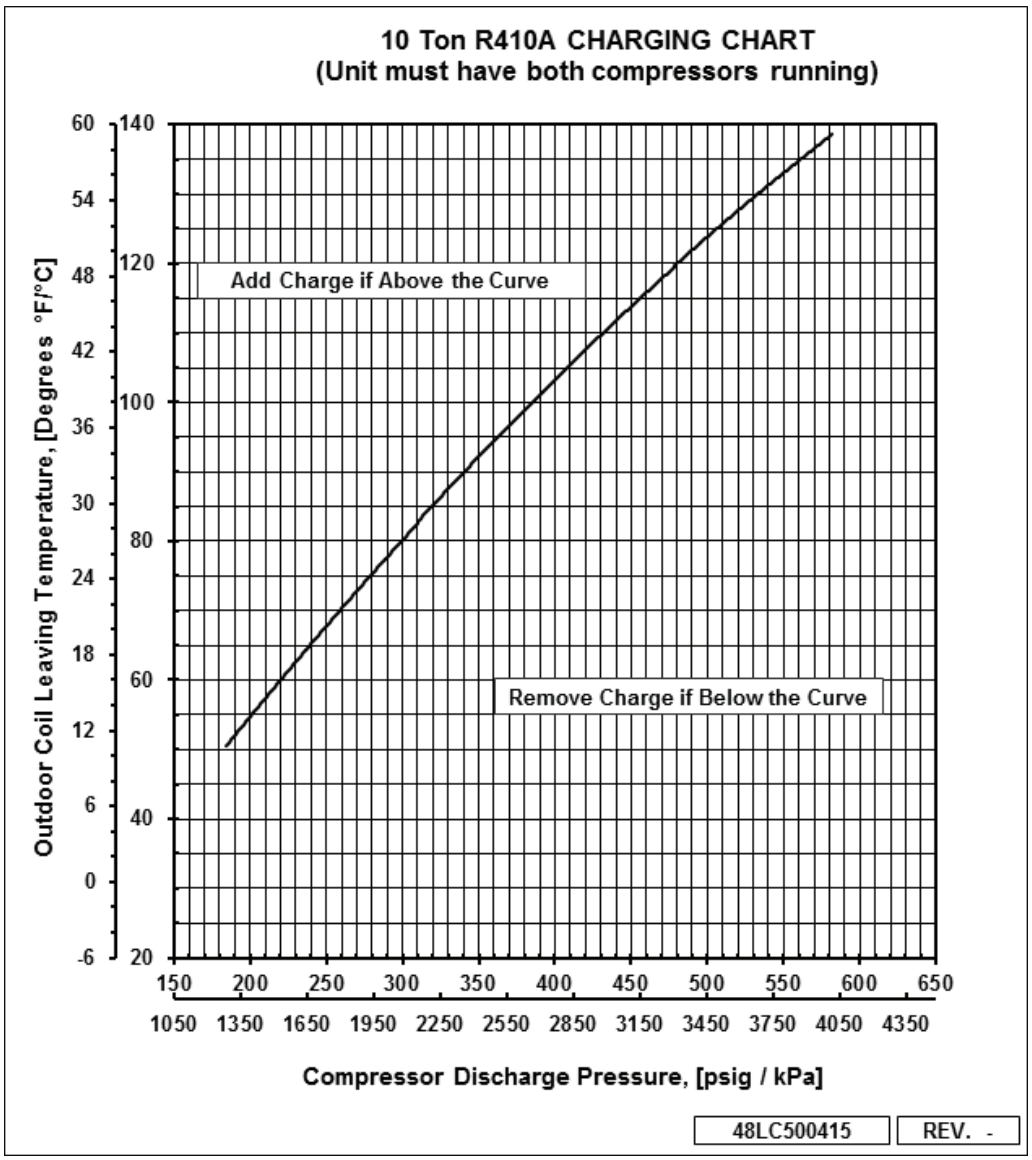

C13380

Fig. 12 - Cooling Charging Charts (12)

Compressor Rotation

On 3-phase units with scroll compressors, it is important to be certain compressor is rotating in the proper direction. To determine whether or not compressor is rotating in the proper direction:

1. Connect service gauges to suction and discharge pressure fittings.
2. Energize the compressor.
3. The suction pressure should drop and the discharge pressure should rise, as is normal on any start-up.

NOTE: If the suction pressure does not drop and the discharge pressure does not rise to normal levels:

. . . . . 1. Note that the evaporator fan is probably also
. . . . . rotating in the wrong direction.
. . . . . 2. Turn off power to the unit.
. . . . . 3. Reverse any two of the unit power leads.
. . . . . 4. Reapply power to the compressor.

The suction and discharge pressure levels should now move to their normal start-up levels.

NOTE: When the compressor is rotating in the wrong direction, the unit makes an elevated level of noise and does not provide cooling.

Filter Drier

Replace whenever refrigerant system is exposed to atmosphere. Only use factory specified liquid-line filter driers with working pressures no less than 650 psig. Do not install a suction-line filter drier in liquid line. A liquid-line filter drier designed for use with Puron® refrigerant is required on every unit.

Condenser-Fan Location

See Fig. 13.

1. Shut off unit power supply. Install lockout tag.
2. Remove condenser-fan assembly (grille, motor, and fan).
3. Loosen fan hub setscrews.
4. Adjust fan height as shown in Fig. 13.
5. Tighten setscrews to 84 in-lbs (9.5 Nm).
6. Replace condenser-fan assembly.

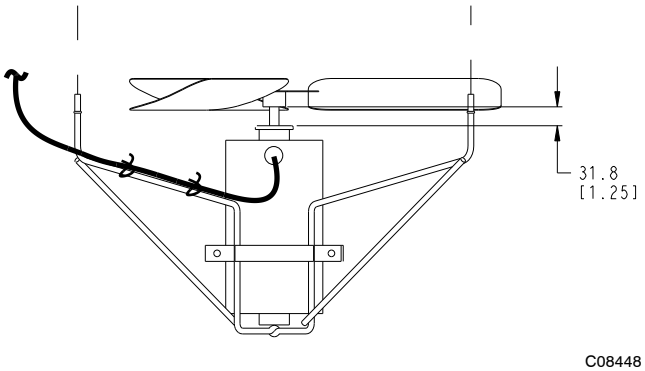

Fig. 13 - Condenser Fan Adjustment

Troubleshooting Cooling System

Refer to Table 1 for additional troubleshooting topics.

Table 1 – Cooling Service Analysis

PROBLEM	CAUSE	REMEDY
Compressor and Condenser Fan Will Not Start.	Power failure.	Call power company.
	Fuse blown or circuit breaker tripped.	Replace fuse or reset circuit breaker.
	Defective thermostat, contactor, transformer, or control relay.	Replace component.
	Insufficient line voltage.	Determine cause and correct.
	Incorrect or faulty wiring.	Check wiring diagram and rewire correctly.
	Thermostat setting too high.	Lower thermostat setting below room temperature.
Compressor Will Not Start But Condenser Fan Runs.	Faulty wiring or loose connections in compressor circuit.	Check wiring and repair or replace.
	Compressor motor burned out, seized, or internal overload open.	Determine cause. Replace compressor.
	Defective run/start capacitor, overload, start relay.	Determine cause and replace.
	One leg of three–phase power dead.	Replace fuse or reset circuit breaker. Determine cause.
Compressor Cycles (other than normally satisfying thermostat).	Refrigerant overcharge or undercharge.	Recover refrigerant, evacuate system, and recharge to nameplate.
	Defective compressor.	Replace and determine cause.
	Insufficient line voltage.	Determine cause and correct.
	Blocked condenser.	Determine cause and correct.
	Defective run/start capacitor, overload, or start relay.	Determine cause and replace.
	Defective thermostat.	Replace thermostat.
	Faulty condenser–fan motor or capacitor.	Replace.
	Restriction in refrigerant system.	Locate restriction and remove.
Compressor Operates Continuously.	Dirty air filter.	Replace filter.
	Unit undersized for load.	Decrease load or increase unit size.
	Thermostat set too low.	Reset thermostat.
	Low refrigerant charge.	Locate leak; repair and recharge.
	Leaking valves in compressor.	Replace compressor.
	Air in system.	Recover refrigerant, evacuate system, and recharge.
	Condenser coil dirty or restricted.	Clean coil or remove restriction.
Excessive Head Pressure.	Dirty air filter.	Replace filter.
	Dirty condenser coil.	Clean coil.
	Refrigerant overcharged.	Recover excess refrigerant.
	Air in system.	Recover refrigerant, evacuate system, and recharge.
	Condenser air restricted or air short–cycling.	Determine cause and correct.
Head Pressure Too Low.	Low refrigerant charge.	Check for leaks; repair and recharge.
	Compressor valves leaking.	Replace compressor.
	Restriction in liquid tube.	Remove restriction.
Excessive Suction Pressure.	High heat load.	Check for source and eliminate.
	Compressor valves leaking.	Replace compressor.
	Refrigerant overcharged.	Recover excess refrigerant.
Suction Pressure Too Low.	Dirty air filter.	Replace filter.
	Low refrigerant charge.	Check for leaks; repair and recharge.
	Metering device or low side restricted.	Remove source of restriction.
	Insufficient evaporator airflow.	Increase air quantity. Check filter and replace if necessary.
	Temperature too low in conditioned area.	Reset thermostat.
	Outdoor ambient below 25° F.	Install low–ambient kit.
Evaporator Fan Will Not Shut Off.	Time off delay not finished.	Wait for 30–second off delay.
Compressor Makes Excessive Noise.	Compressor rotating in wrong direction.	Reverse the 3–phase power leads.

CONVENIENCE OUTLETS

⚠ WARNING

ELECTRICAL OPERATION HAZARD

Failure to follow this warning could result in personal injury or death.

Units with convenience outlet circuits may use multiple disconnects. Check convenience outlet for power status before opening unit for service. Locate its disconnect switch, if appropriate, and open it. Tag-out this switch, if necessary.

Two types of convenience outlets are offered on 50LC models: Non-powered and unit-powered. Both types provide a 125-volt GFCI (ground-fault circuit-interrupter) duplex receptacle rated at 15-A behind a hinged waterproof access cover, located on the end panel of the unit. (See Fig. 14.)

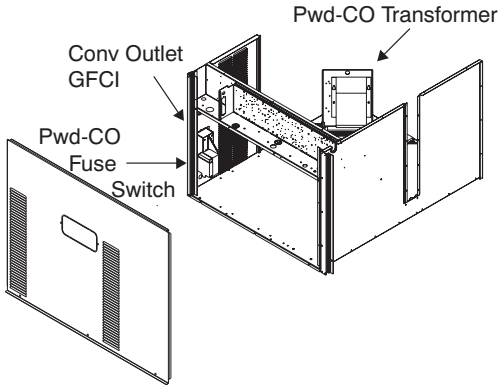

C08128

Fig. 14 - Convenience Outlet Location

Weatherproof Cover Installation

A weatherproof while-in-use cover for the factory-installed convenience outlets is now required by UL standards. This cover cannot be factory-mounted due to its depth. It must be installed at unit installation. For shipment, the convenience outlet is covered with a blank cover plate.

The weatherproof cover kit is shipped in the unit's control box. The kit includes the hinged cover, a backing plate and gasket.

IMPORTANT: DISCONNECT ALL POWER TO UNIT AND CONVENIENCE OUTLET.

1. Remove the blank cover plate at the convenience outlet. Discard the blank cover.
2. Loosen the two screws at the GFCI duplex outlet, until approximately 1/2-in (13 mm) under screw heads are exposed.
3. Press the gasket over the screw heads.
4. Slip the backing plate over the screw heads at the keyhole slots and align with the gasket. Tighten the two screws until snug (do not over-tighten).
5. Mount the weatherproof cover to the backing plate as shown in Fig. 15.

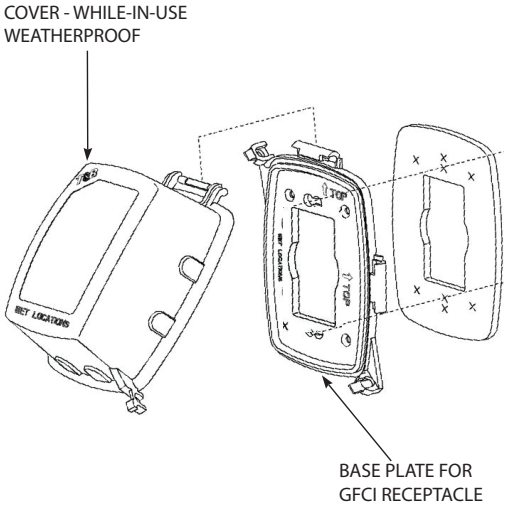

C09244

Fig. 15 - Weatherproof Cover Installation

6. Remove two slot fillers in the bottom of the cover to permit service tool cords to exit the cover.
7. Check for full closing and latching.

Types of Convenience Outlets

Non-Powered Type

This type requires the field installation of a general-purpose 125-volt 15-A circuit powered from a source elsewhere in the building. Observe national and local codes when selecting wire size, fuse or breaker requirements and disconnect switch size and location. Route 125-v power supply conductors into the bottom of the utility box containing the duplex receptacle.

Unit-Powered Type

A unit-mounted transformer is factory-installed to stepdown the main power supply voltage to the unit to 115-v at the duplex receptacle. This option also includes a manual switch with fuse, located in a utility box and mounted on a bracket behind the convenience outlet; access is through the unit's control box access panel. (See Fig. 14.)

The primary leads to the convenience outlet transformer are not factory-connected. Selection of primary power source is a customer-option. If local codes permit, the transformer primary leads can be connected at the line-side terminals on a unit-mounted non-fused disconnect or circuit-breaker switch; this will provide service power to the unit when the unit disconnect switch or circuit-breaker is open. Other connection methods will result in the convenience outlet circuit being de-energized when the unit disconnect or circuit-breaker is open. (See Fig. 16.)

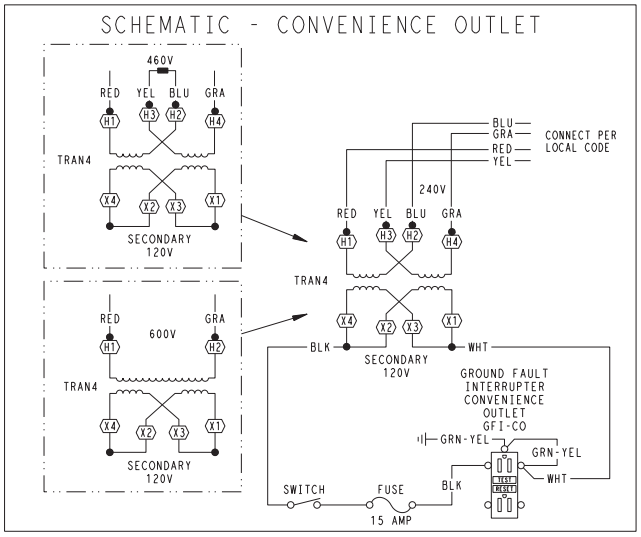

CO8283

UNIT VOLTAGE	CONNECT AS	PRIMARY CONNECTIONS	TRANSFORMER TERMINALS
208, 230	240	L1: RED +YEL L2: BLU + GRA	H1 + H3 H2 + H4
460	480	L1: RED Splice BLU + YEL L2: GRA	H1 H2 + H3 H4
575	600	L1: RED L2: GRA	H1 H2

Fig. 16 - Powered Convenience Outlet Wiring

Duty Cycle

The unit-powered convenience outlet has a duty cycle limitation. The transformer is intended to provide power on an intermittent basis for service tools, lamps, etc; it is not intended to provide 15-amps loading for continuous duty loads (such as electric heaters for overnight use). Observe a 50% limit on circuit loading above 8-amps (i.e., limit loads exceeding 8-amps to 30 minutes of operation every hour).

Maintenance

Periodically test the GFCI receptacle by pressing the TEST button on the face of the receptacle. This should cause the internal circuit of the receptacle to trip and open the receptacle. Check for proper grounding wires and power line phasing if the GFCI receptacle does not trip as required. Press the RESET button to clear the tripped condition.

Fuse On Powered Type

The factory fuse is a Bussman "Fusetron" T-15, non-renewable screw-in (Edison base) type plug fuse.

Using Unit-Mounted Convenience Outlets

Units with unit-mounted convenience outlet circuits will often require that two disconnects be opened to de-energize all power to the unit. Treat all units as electrically energized until the convenience outlet power is also checked and de-energization is confirmed. Observe National Electrical Code Article 210, Branch Circuits, for use of convenience outlets.

SMOKE DETECTORS

Smoke detectors are available as factory-installed options on 50LC models. Smoke detectors may be specified for Supply Air only or for Return Air without or with economizer or in combination of Supply Air and Return Air. Return Air smoke detectors are arranged for vertical return configurations only. All components necessary for operation are factory-provided and mounted. The unit is factory-configured for immediate smoke detector shutdown operation; additional wiring or modifications to unit terminal board may be necessary to complete the unit and smoke detector configuration to meet project requirements.

System

The smoke detector system consists of a four-wire controller and one or two sensors. Its primary function is to shut down the rooftop unit in order to prevent smoke from circulating throughout the building. It is not to be used as a life saving device.

Controller

The controller includes a controller housing, a printed circuit board, and a clear plastic cover. (See Fig. 17.) The controller can be connected to one or two compatible duct smoke sensors. The clear plastic cover is secured to the housing with a single captive screw for easy access to the wiring terminals. The controller has three LEDs (for Power, Trouble and Alarm) and a manual test/reset button (on the cover face).

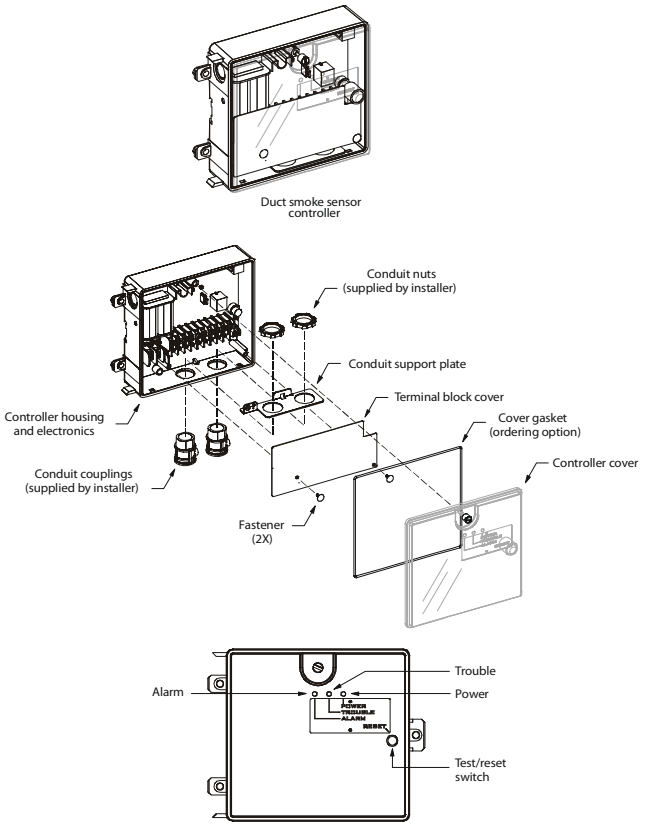

C08208

Fig. 17 - Controller Assembly

Sensor

The sensor includes a plastic housing, a printed circuit board, a clear plastic cover, a sampling tube inlet and an exhaust tube. (See Fig. 18.) The sampling tube (when used) and exhaust tube are attached during installation. The sampling tube varies in length depending on the size of the rooftop unit. The clear plastic cover permits visual inspections without having to disassemble the sensor. The cover attaches to the sensor housing using four captive screws and forms an airtight chamber around the sensing electronics. Each sensor includes a harness with an RJ45 terminal for connecting to the controller. Each sensor has four LEDs (Power, Trouble, Alarm and Dirty) and a manual test/reset button (on the left-side of the housing).

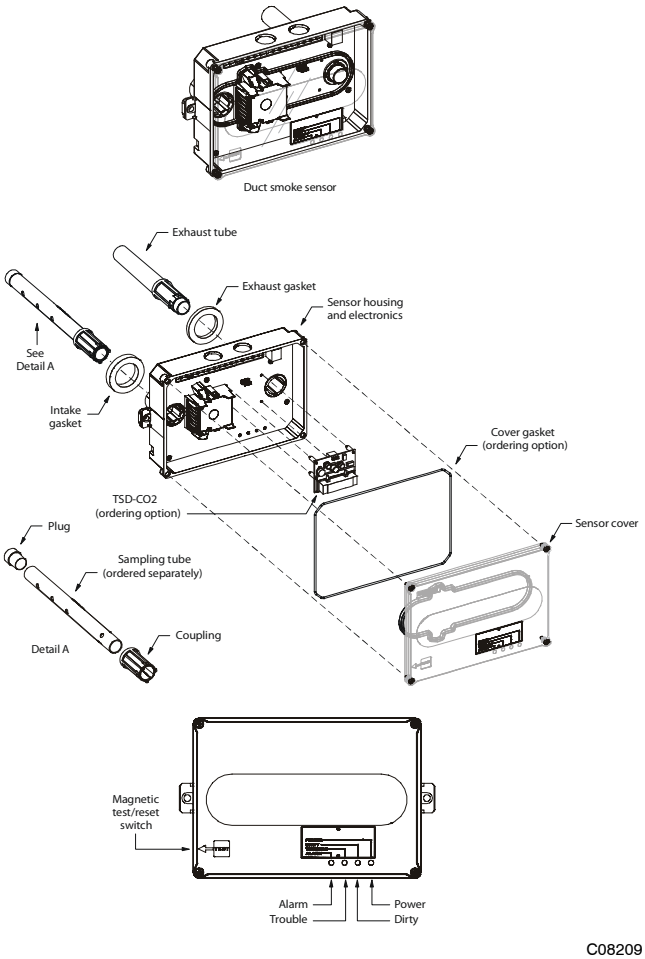

Fig. 18 - Smoke Detector Sensor

Air is introduced to the duct smoke detector sensor's sensing chamber through a sampling tube that extends into the HVAC duct and is directed back into the ventilation system through a (shorter) exhaust tube. The difference in air pressure between the two tubes pulls the sampled air through the sensing chamber. When a sufficient amount of smoke is detected in the sensing chamber, the sensor signals an alarm state and the controller automatically takes the appropriate action to shut down fans and blowers, change over air handling systems, notify the fire alarm control panel, etc.

The sensor uses a process called differential sensing to prevent gradual environmental changes from triggering false alarms. A rapid change in environmental conditions, such as smoke from a fire, causes the sensor to signal an alarm state, but dust and debris accumulated over time does not.

For installations using two sensors, the duct smoke detector does not differentiate which sensor signals an alarm or trouble condition.

Smoke Detector Locations

Supply Air

The Supply Air smoke detector sensor is located to the left of the unit's indoor (supply) fan. (See Fig. 19.) Access is through the fan access panel. There is no sampling tube used at this location. The sampling tube inlet extends through the side plate of the fan housing (into a high pressure area). The controller is located on a bracket to the right of the return filter, accessed through the lift-off filter panel.

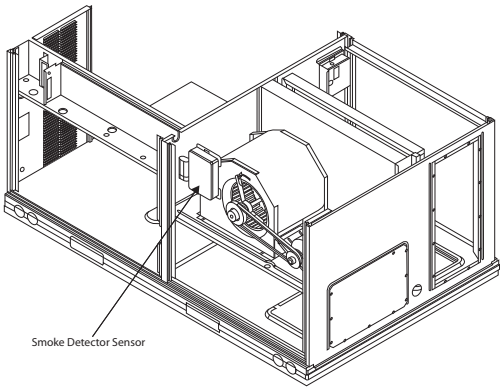

Fig. 19 - Typical Supply Air Smoke Detector Sensor Location

Return Air Without Economizer

The sampling tube is located across the return air opening on the unit basepan. (See Fig. 20.) The holes in the sampling tube face downward, into the return air stream. The sampling tube is connected via tubing to the return air sensor that is mounted on a bracket high on the partition between return filter and controller location. (This sensor is shipped in a flat-mounting location. Installation requires that this sensor be relocated to its operating location and the tubing to the sampling tube be connected. See installation steps).

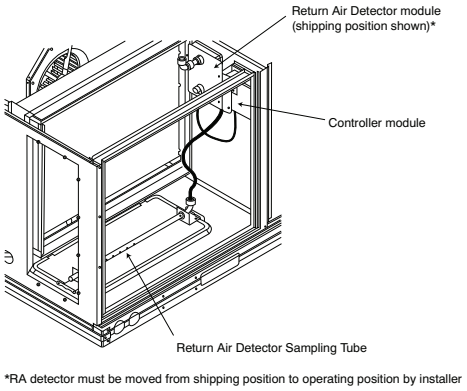

C07307

Fig. 20 - Typical Return Air Detector Location

Return Air With Economizer

The sampling tube is inserted through the side plates of the economizer housing, placing it across the return air opening on the unit basepan. (See Fig. 21.) The holes in the sampling tube face downward, into the return air stream. The sampling tube is connected via tubing to the return air sensor that is mounted on a bracket high on the partition between return filter and controller location. (This sensor is shipped in a flat-mounting location. Installation requires that this sensor be relocated to its operating location and the tubing to the sampling tube be connected. See installation steps).

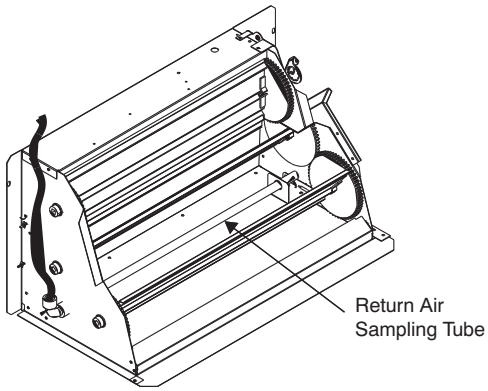

C08129

Fig. 21 - Return Air Sampling Tube Location

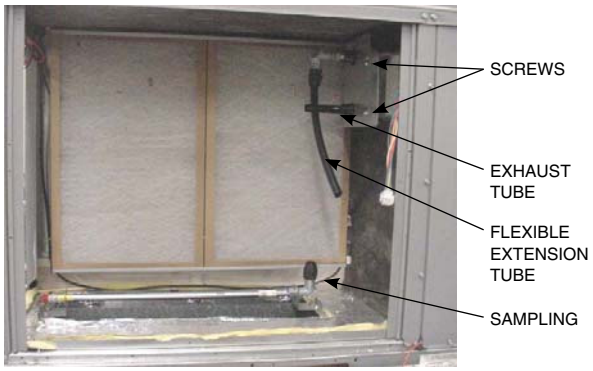

C08126

Fig. 22 - Return Air Detector Shipping Position

Completing Installation of Return Air Smoke Sensor

1. Unscrew the two screws holding the Return Air Sensor detector plate. (See Fig. 22.) Save the screws.
2. Remove the Return Air Sensor and its detector plate.
3. Rotate the detector plate so the sensor is facing outwards and the sampling tube connection is on the bottom. (See Fig. 23.)
4. Screw the sensor and detector plate into its operating position using screws from Step 1. Make sure the sampling tube connection is on the bottom and the exhaust tube is on the top. (See Fig. 23.)
5. Connect the flexible tube on the sampling inlet to the sampling tube on the basepan.
6. For units with an economizer, the sampling tube is integrated into the economizer housing but the connection of the flexible tubing to the sampling tube is the same.

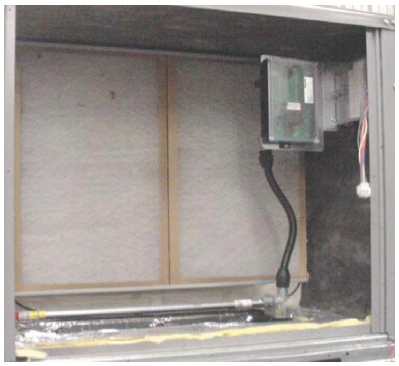

C08127

Fig. 23 - Return Air Sensor Operating Position

FIOP Smoke Detector Wiring and Response

All Units

FIOP smoke detector is configured to automatically shut down all unit operations when smoke condition is detected. See Fig. 24, Smoke Detector Wiring.

Highlight A

JMP 3 is factory-cut, transferring unit control to smoke detector.

Highlight B

Smoke detector NC contact set will open on smoke alarm condition, de-energizing the ORN conductor.

Highlight C

24-v power signal via ORN lead is removed at Smoke Detector input on LCTB; all unit operations cease immediately.

Highlight D

On smoke alarm condition, the smoke detector NO Alarm contact will close, supplying 24-v power to GRA conductor.

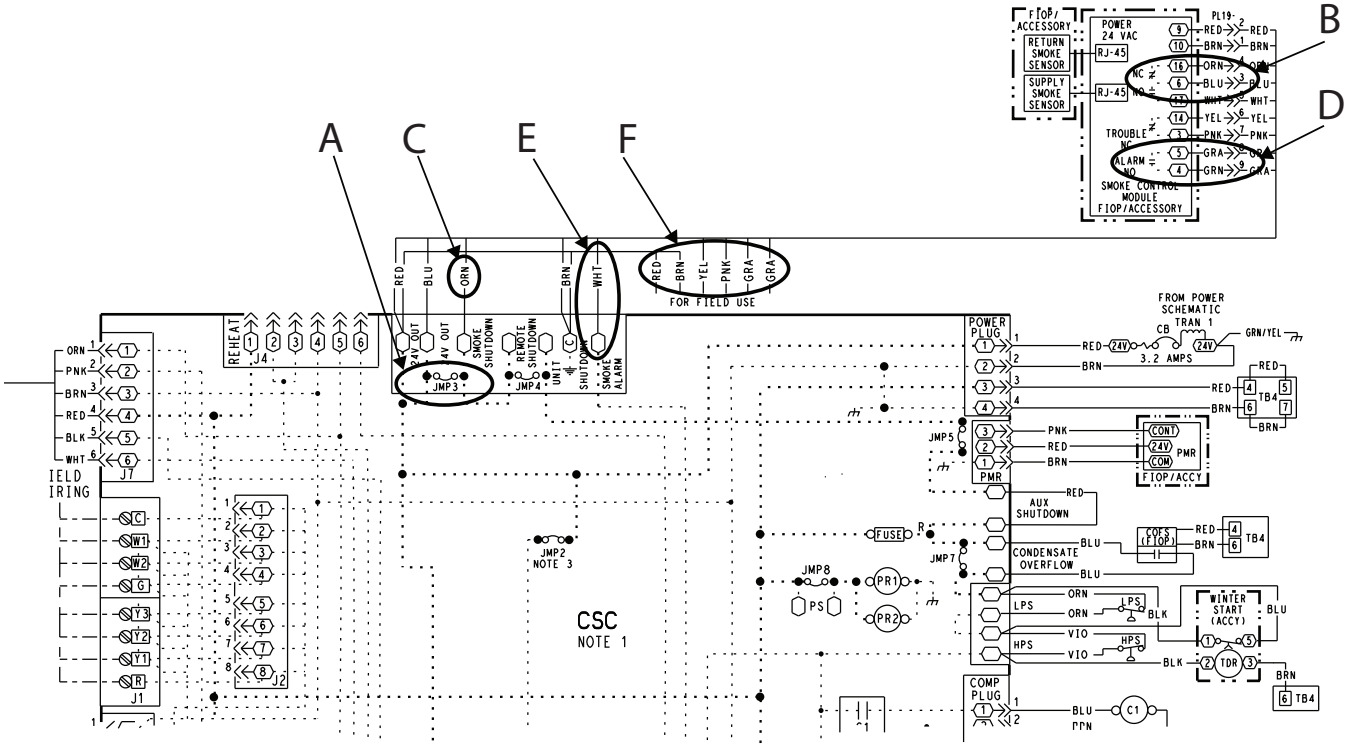

Fig. 24 - Typical Smoke Detector System Wiring

Highlight E

WHT lead at Smoke Alarm input on LCTB provides 24-v signal to FIOP DDC control.

Using Remote Logic

Five conductors are provided for field use (see Highlight F) for additional annunciation functions.

Additional Application Data — Refer to Catalog No. HKRNKA-1XA for discussions on additional control features of these smoke detectors including multiple unit coordination. (See Fig. 24.)

Sensor and Controller Tests

Sensor Alarm Test

The sensor alarm test checks a sensor's ability to signal an alarm state. This test requires that you use a field provided SD-MAG test magnet.

⚠ CAUTION

OPERATIONAL TEST HAZARD

Failure to follow this caution may result in personnel and authority concern.

This test places the duct detector into the alarm state. Unless part of the test, disconnect all auxiliary equipment from the controller before performing the test. If the duct detector is connected to a fire alarm system, notify the proper authorities before performing the test.

Sensor Alarm Test Procedure

1. Hold the test magnet where indicated on the side of the sensor housing for seven seconds.
2. Verify that the sensor's Alarm LED turns on.
3. Reset the sensor by holding the test magnet against the sensor housing for two seconds.
4. Verify that the sensor's Alarm LED turns off.

Controller Alarm Test

The controller alarm test checks the controller's ability to initiate and indicate an alarm state.

⚠ CAUTION

OPERATIONAL TEST HAZARD

Failure to follow this caution may result in personnel and authority concern.

This test places the duct detector into the alarm state. Disconnect all auxiliary equipment from the controller before performing the test. If the duct detector is connected to a fire alarm system, notify the proper authorities before performing the test.

Controller Alarm Test Procedure

1. Press the controller's test/reset switch for seven seconds.
2. Verify that the controller's Alarm LED turns on.
3. Reset the sensor by pressing the test/reset switch for two seconds.
4. Verify that the controller's Alarm LED turns off.

Dirty Controller Test

The dirty controller test checks the controller's ability to initiate a dirty sensor test and indicate its results.

⚠ CAUTION

OPERATIONAL TEST HAZARD

Failure to follow this caution may result in personnel and authority concern.

Pressing the controller's test/reset switch for longer than seven seconds will put the duct detector into the alarm state and activate all automatic alarm responses.

Dirty Controller Test Procedure

1. Press the controller's test/reset switch for two seconds.
2. Verify that the controller's Trouble LED flashes.

Dirty Sensor Test

The dirty sensor test provides an indication of the sensor's ability to compensate for gradual environmental changes. A sensor that can no longer compensate for environmental changes is considered 100% dirty and requires cleaning or replacing. You must use a field provided SD-MAG test magnet to initiate a sensor dirty test. The sensor's Dirty LED indicates the results of the dirty test as shown in Table 2.

⚠ CAUTION

OPERATIONAL TEST HAZARD

Failure to follow this caution may result in personnel and authority concern.

Holding the test magnet against the sensor housing for more than seven seconds will put the duct detector into the alarm state and activate all automatic alarm responses.

Table 2 – Dirty LED Test

FLASHES	DESCRIPTION
1	0–25% dirty. (Typical of a newly installed detector)
2	25–50% dirty
3	51–75% dirty
4	76–99% dirty

Dirty Sensor Test Procedure

1. Hold the test magnet where indicated on the side of the sensor housing for two seconds.
2. Verify that the sensor's Dirty LED flashes.

⚠ CAUTION

OPERATIONAL TEST HAZARD

Failure to follow this caution may result in personnel and authority concern.

Changing the dirty sensor test operation will put the detector into the alarm state and activate all automatic alarm responses. Before changing dirty sensor test operation, disconnect all auxiliary equipment from the controller and notify the proper authorities if connected to a fire alarm system.

Changing the Dirty Sensor Test

By default, sensor dirty test results are indicated by:

- The sensor's Dirty LED flashing.
- The controller's Trouble LED flashing.
- The controller's supervision relay contacts toggle.

The operation of a sensor's dirty test can be changed so that the controller's supervision relay is not used to indicate test results. When two detectors are connected to a controller, sensor dirty test operation on both sensors must be configured to operate in the same manner.

To Configure the Dirty Sensor Test Operation

1. Hold the test magnet where indicated on the side of the sensor housing until the sensor's Alarm LED turns on and its Dirty LED flashes twice (approximately 60 seconds).
2. Reset the sensor by removing the test magnet then holding it against the sensor housing again until the sensor's Alarm LED turns off (approximately 2 seconds).

Remote Station Test

The remote station alarm test checks a test/reset station's ability to initiate and indicate an alarm state.

⚠ CAUTION

OPERATIONAL TEST HAZARD

Failure to follow this caution may result in personnel and authority concern.

This test places the duct detector into the alarm state. Unless part of the test, disconnect all auxiliary equipment from the controller before performing the test. If the duct detector is connected to a fire alarm system, notify the proper authorities before performing the test.

SD-TRK4 Remote Alarm Test Procedure

1. Turn the key switch to the RESET/TEST position for seven seconds.
2. Verify that the test/reset station's Alarm LED turns on.
3. Reset the sensor by turning the key switch to the RESET/TEST position for two seconds.
4. Verify that the test/reset station's Alarm LED turns off.

Remote Test/Reset Station Dirty Sensor Test

The test/reset station dirty sensor test checks the test/reset station's ability to initiate a sensor dirty test and indicate the results. It must be wired to the controller as shown in Fig. 25 and configured to operate the controller's supervision relay. For more information, see "Changing the Dirty Sensor Test."

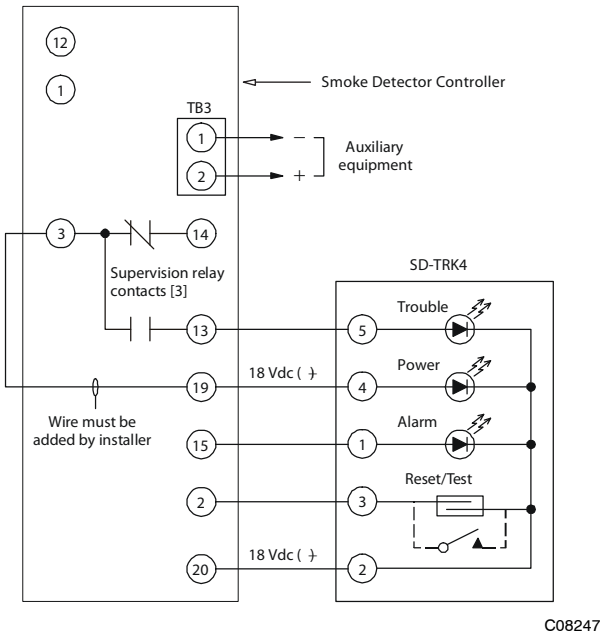

Fig. 25 - Remote Test/Reset Station Connections

⚠ CAUTION

OPERATIONAL TEST HAZARD

Failure to follow this caution may result in personnel and authority concern.

If the test/reset station's key switch is left in the RESET/TEST position for longer than seven seconds, the detector will automatically go into the alarm state and activate all automatic alarm responses.

⚠ CAUTION

OPERATIONAL TEST HAZARD

Failure to follow this caution may result in personnel and authority concern.

Holding the test magnet to the target area for longer than seven seconds will put the detector into the alarm state and activate all automatic alarm responses.

Dirty Sensor Test Using an SD-TRK4

1. Turn the key switch to the RESET/TEST position for two seconds.
2. Verify that the test/reset station's Trouble LED flashes.

Detector Cleaning

Cleaning the Smoke Detector

Clean the duct smoke sensor when the Dirty LED is flashing continuously or sooner if conditions warrant.

⚠ CAUTION

OPERATIONAL TEST HAZARD

Failure to follow this caution may result in personnel and authority concern.

If the smoke detector is connected to a fire alarm system, first notify the proper authorities that the detector is undergoing maintenance then disable the relevant circuit to avoid generating a false alarm.

1. Disconnect power from the duct detector then remove the sensor's cover. (See Fig. 26.)
2. Using a vacuum cleaner, clean compressed air, or a soft bristle brush, remove loose dirt and debris from inside the sensor housing and cover.
   Use isopropyl alcohol and a lint-free cloth to remove dirt and other contaminants from the gasket on the sensor's cover.
3. Squeeze the retainer clips on both sides of the optic housing then lift the housing away from the printed circuit board.
4. Gently remove dirt and debris from around the optic plate and inside the optic housing.
5. Replace the optic housing and sensor cover.
6. Connect power to the duct detector then perform a sensor alarm test.

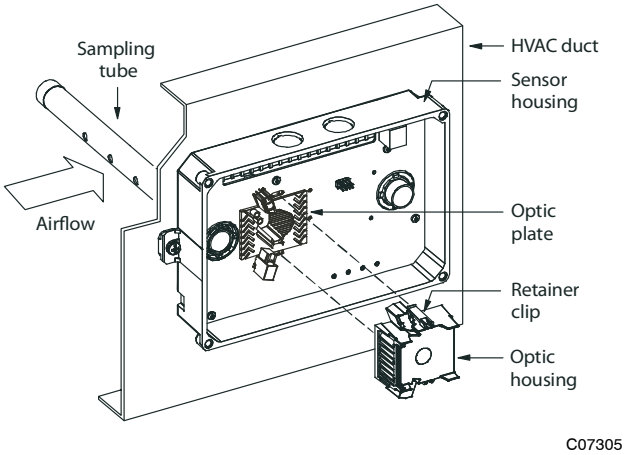

Fig. 26 - Sensor Cleaning Diagram

Table 3 – Detector Indicators

CONTROL OR INDICATOR	DESCRIPTION
Magnetic test/reset switch	Resets the sensor when it is in the alarm or trouble state. Activates or tests the sensor when it is in the normal state.
Alarm LED	Indicates the sensor is in the alarm state.
Trouble LED	Indicates the sensor is in the trouble state.
Dirty LED	Indicates the amount of environmental compensation used by the sensor (flashing continuously = 100%)
Power LED	Indicates the sensor is energized.

Indicators

Normal State

The smoke detector operates in the normal state in the absence of any trouble conditions and when its sensing chamber is free of smoke. In the normal state, the Power LED on both the sensor and the controller are on and all other LEDs are off.

Alarm State

The smoke detector enters the alarm state when the amount of smoke particulate in the sensor's sensing chamber exceeds the alarm threshold value. (See Table 3.) Upon entering the alarm state:

- The sensor's Alarm LED and the controller's Alarm LED turn on.
- The contacts on the controller's two auxiliary relays switch positions.
- The contacts on the controller's alarm initiation relay close.
- The controller's remote alarm LED output is activated (turned on).
- The controller's high impedance multiple fan shutdown control line is pulled to ground Trouble state.

The SuperDuct duct smoke detector enters the trouble state under the following conditions:

- A sensor's cover is removed and 20 minutes pass before it is properly secured.
- A sensor's environmental compensation limit is reached (100% dirty).
- A wiring fault between a sensor and the controller is detected.

An internal sensor fault is detected upon entering the trouble state:

- The contacts on the controller's supervisory relay switch positions. (See Fig. 27.)
- If a sensor trouble, the sensor's Trouble LED the controller's Trouble LED turn on.
- If 100% dirty, the sensor's Dirty LED turns on and the controller's Trouble LED flashes continuously.
- If a wiring fault between a sensor and the controller, the controller's Trouble LED turns on but not the sensor's.

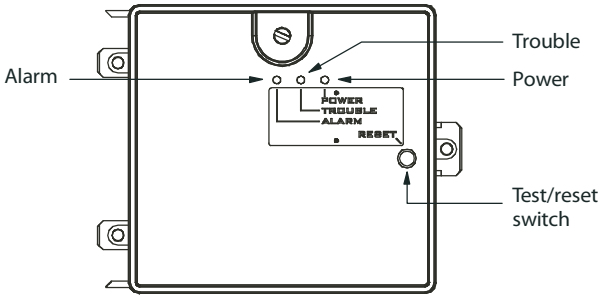

C07298

Fig. 27 - Controller Assembly

NOTE: All troubles are latched by the duct smoke detector. The trouble condition must be cleared and then the duct smoke detector must be reset in order to restore it to the normal state.

Resetting Alarm and Trouble Condition Trips

Manual reset is required to restore smoke detector systems to Normal operation. For installations using two sensors, the duct smoke detector does not differentiate which sensor signals an alarm or trouble condition. Check each sensor for Alarm or Trouble status (indicated by LED). Clear the condition that has generated the trip at this sensor. Then reset the sensor by pressing and holding the reset button (on the side) for 2 seconds. Verify that the sensor's Alarm and Trouble LEDs are now off. At the controller, clear its Alarm or Trouble state by pressing and holding the manual reset button (on the front cover) for 2 seconds. Verify that the controller's Alarm and Trouble LEDs are now off. Replace all panels.

Troubleshooting

Controller's Trouble LED is On

1. Check the Trouble LED on each sensor connected to the controller. If a sensor's Trouble LED is on, determine the cause and make the necessary repairs.
2. Check the wiring between the sensor and the controller. If wiring is loose or missing, repair or replace as required.

Controller's Trouble LED is Flashing

1. One or both of the sensors is 100% dirty.
2. Determine which Dirty LED is flashing then clean that sensor assembly as described in the detector cleaning section.

Sensor's Trouble LED is On

1. Check the sensor's Dirty LED. If it is flashing, the sensor is dirty and must be cleaned.

2. Check the sensor's cover. If it is loose or missing, secure the cover to the sensor housing.
3. Replace sensor assembly.

Sensor's Power LED is Off

1. Check the controller's Power LED. If it is off, determine why the controller does not have power and make the necessary repairs.
2. Check the wiring between the sensor and the controller. If wiring is loose or missing, repair or replace as required.

Controller's Power LED is Off

1. Make sure the circuit supplying power to the controller is operational. If not, make sure JP2 and JP3 are set correctly on the controller before applying power.
2. Verify that power is applied to the controller's supply input terminals. If power is not present, replace or repair wiring as required.

Remote Test/Reset Station's Trouble LED Does Not Flash When Performing a Dirty Test, But the Controller's Trouble LED Does

1. Verify that the remote test/station is wired as shown in Fig. 25. Repair or replace loose or missing wiring.
2. Configure the sensor dirty test to activate the controller's supervision relay. See "Changing sensor dirty test operation."

Sensor's Trouble LED is On, But the Controller's Trouble LED is OFF

Remove JP1 on the controller.

PROTECTIVE DEVICES

Compressor Protection

Overcurrent

Each compressor has internal linebreak motor protection. Reset is automatic after compressor motor has cooled.

Overtemperature

Each compressor has an internal protector to protect it against excessively high discharge gas temperatures. Reset is automatic.

High Pressure Switch

Each system is provided with a high pressure switch mounted on the discharge line. The switch is stem-mounted and brazed into the discharge tube. Trip setting is 630 psig +/- 10 psig (4344 +/- 69 kPa) when hot. Reset is automatic at 505 psig (3482 kPa).

Low Pressure Switch

Each system is protected against a loss of charge and low evaporator coil loading condition by a low pressure switch located on the suction line near the compressor. The switch is stem-mounted. Trip setting is 54 psig +/- 5 psig (372 +/- 34 kPa). Reset is automatic at 117 +/- 5 psig (807 +/- 34 kPa).

Supply (Indoor) Fan Motor Protection

Disconnect and lockout power when servicing fan motor.

The supply fan motor is equipped with an overcurrent protection device. The type of device depends on the motor size. (See Table 4.)

Table 4 – Supply Fan Motor Protection Devices

Motor Size (bhp)	Overload Device	Reset
1.7	Internal linebreak	Automatic
2.4	Internal linebreak	Automatic
2.9	Thermik	Automatic
3.7	Thermik	Automatic
5.2	External (circuit breaker)	Manual

The Internal Linebreak type is an imbedded switch that senses both motor current and internal motor temperature. When this switch reaches its trip setpoint, the switch opens the power supply to the motor and the motor stops. Reset is automatic when the motor windings cool down.

The Thermik device is a snap-action overtemperature protection device that is imbedded in the motor windings. It is a pilot-circuit device that is wired into the unit's 24-v control circuit. When this switch reaches its trip setpoint, it opens the 24-v control circuit and causes all unit operation to cease. This device resets automatically when the motor windings cool. Do not bypass this switch to correct trouble. Determine the cause and correct it.

The External motor overload device is a specially-calibrated circuit breaker that is UL recognized as a motor overload controller. It is an overcurrent device. When the motor current exceeds the circuit breaker setpoint, the device opens all motor power leads and the motor shuts down. Reset requires a manual reset at the overload switch. This device (designated IFCB) is located on the side of the supply fan housing, behind the fan access panel.

Troubleshooting Supply Fan Motor Overload Trips

The supply fan used in 50LC units is a forward-curved centrifugal wheel. At a constant wheel speed, this wheel has a characteristic that causes the fan shaft load to DECREASE when the static pressure in the unit-duct system increases and to INCREASE when the static pressure in the unit-duct system decreases (and fan airflow rate increases). Motor overload conditions typically develop when the unit is operated with an access panel removed, with unfinished duct work, in an economizer-open mode, or a leak develops in the duct system that allows a bypass back to unit return opening.

Condenser Fan Motor Protection

The condenser fan motors are internally protected against overtemperature.

Control Circuit, 24-V

The control circuit is protected against overcurrent conditions by a circuit breaker mounted on control transformer TRAN. Reset is manual.

ELECTRIC HEATERS

50LC units may be equipped with field-installed accessory electric heaters. The heaters are modular in design, with heater frames holding open coil resistance wires strung through ceramic insulators, line-break limit switches and a control contactor. One or two heater modules may be used in a unit.

Heater modules are installed in the compartment below the indoor (supply) fan outlet. Access is through the indoor access panel. Heater modules slide into the compartment on tracks along the bottom of the heater opening. (See Fig. 28-30.)

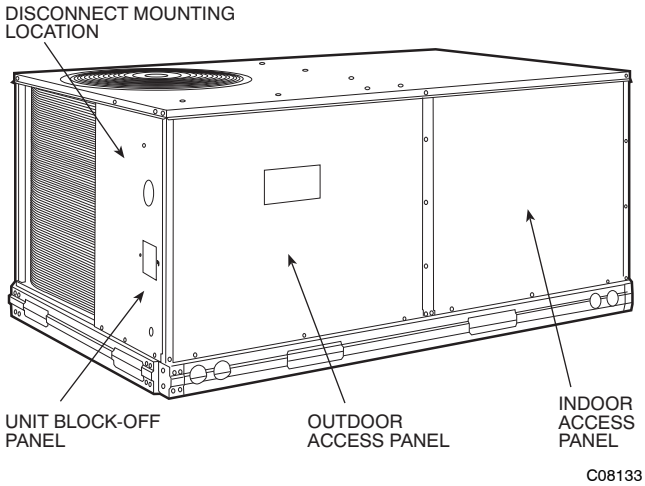

Fig. 28 - Typical Access Panel Location

Not all available heater modules may be used in every unit. Use only those heater modules that are UL listed for use in a specific size unit. Refer to the label on the unit cabinet for the list of approved heaters.

Unit heaters are marked with Heater Model Numbers. But heaters are ordered as and shipped in cartons marked with a corresponding heater Sales Package part number. See Table 5 for correlation between heater Model Number and Sales Package part number.

NOTE: The value in position 9 of the part number differs between the sales package part number (value is 1) and a bare heater model number (value is 0).

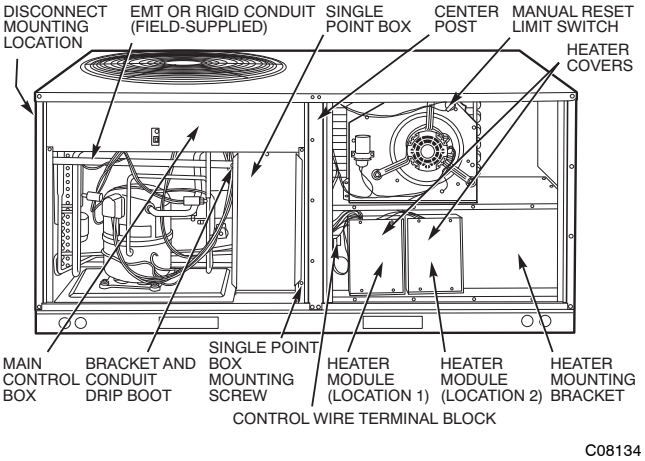

Fig. 29 - Typical Component Location

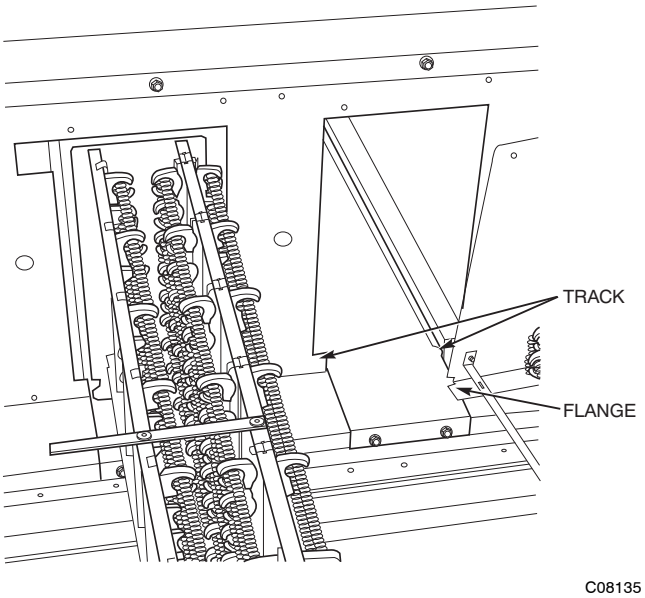

Fig. 30 - Typical Module Installation

Single Point Boxes and Supplementary Fuses

When the unit MOCP device value exceeds 60-A, unit-mounted supplementary fuses are required for each heater circuit. These fuses are included in accessory Single Point Boxes, with power distribution and fuse blocks. The single point box will be installed directly under the unit control box, just to the left of the partition separating the indoor section (with electric heaters) from the outdoor section. The Single Point Box has a hinged access cover. (See Fig. 31.) The Single Point Box also includes a set of power taps to complete the wiring between the Single Point Box and the unit's main control box terminals. Refer to accessory heater and Single Point Box installation instructions for details on tap connections.

Table 5 – Heater Model Number

Bare Heater Model Number	C	R	H	E	A	T	E	R	0	0	1	A	0	0
Heater Sales Package PNO Includes: Bare Heater Carton and packing materials Installation sheet	C	R	H	E	A	T	E	R	1	0	1	A	0	0

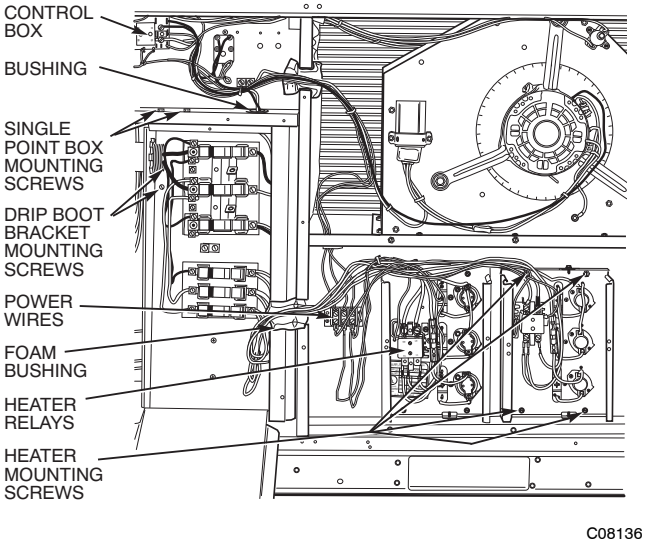

Fig. 31 - Typical Single Point Installation

On 50LC units, all fuses are 60-A. Single point boxes containing fuses for 208/230-V applications use UL Class RK5 250-V fuses (Bussman FRNR 60 or Shawmut TR 60R). Single point boxes for 460-V and 575-V applications use UL Class T 600-V fuses (Bussman JJS 60 or Shawmut A6T 60). (Note that all heaters are qualified for use with a 60-A fuse, regardless of actual heater ampacity, so only 60-A fuses are necessary.)

Unit heater applications not requiring supplemental fuses require a special Single Point Boxes without fuses. The accessory Single Point Boxes contain a terminal block and a set of power taps to complete the wiring between the Single Point Box and the unit's main control box terminals. Refer to accessory heater and Single Point Box installation instructions for details on tap connections.

Safety Devices

Electric heater applications use a combination of line-break/auto-reset limit switches and a pilot-circuit/manual reset limit switch to protect the unit against over-temperature situations.

Line-break/auto-reset limit switches are mounted on the base plate of each heater module. (See Fig. 32.) These are accessed through the indoor access panel. Remove the switch by removing two screws into the base plate and extracting the existing switch.

Pilot-circuit/manual reset limit switch is located in the side plate of the indoor (supply) fan housing. (See Fig. 29.)

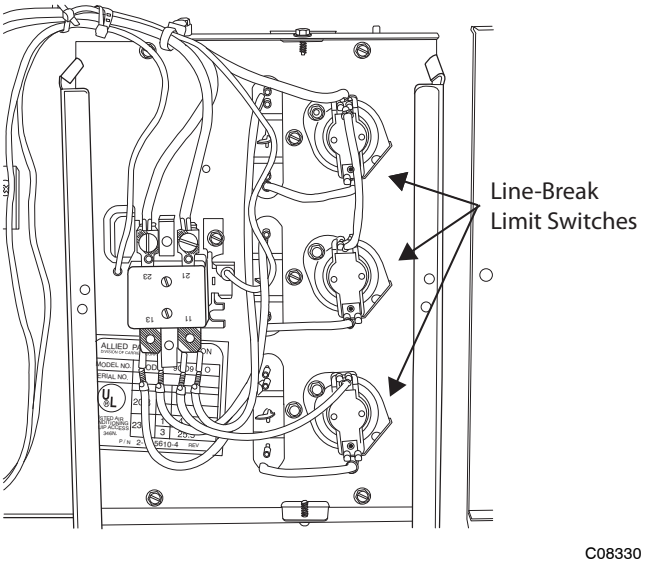

Fig. 32 - Typical Location of Heater Limit Switches (3-phase heater shown)

Low-Voltage Control Connections

Pull the low-voltage control leads from the heater module(s) - VIO and BRN (two of each if two modules are installed; identify for Module #1) - to the 4-pole terminal board TB4 located on the heater bulkhead to the left of Heater #1. Connect the VIO lead from Heater #1 to terminal TB4-1. Connect the VIO lead from Heater #2 to terminal TB4-2. Connect both BRN leads to terminal TB4-3. (See Fig. 33.)

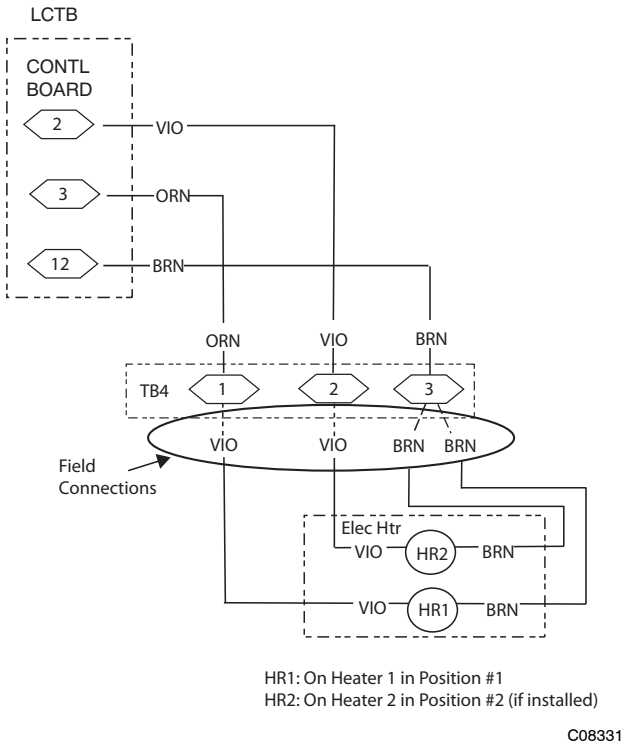

Fig. 33 - Accessory Electric Heater Control Connections

WIRING DIAGRAMS

See Figs. 34 through 40 for typical wiring diagrams.

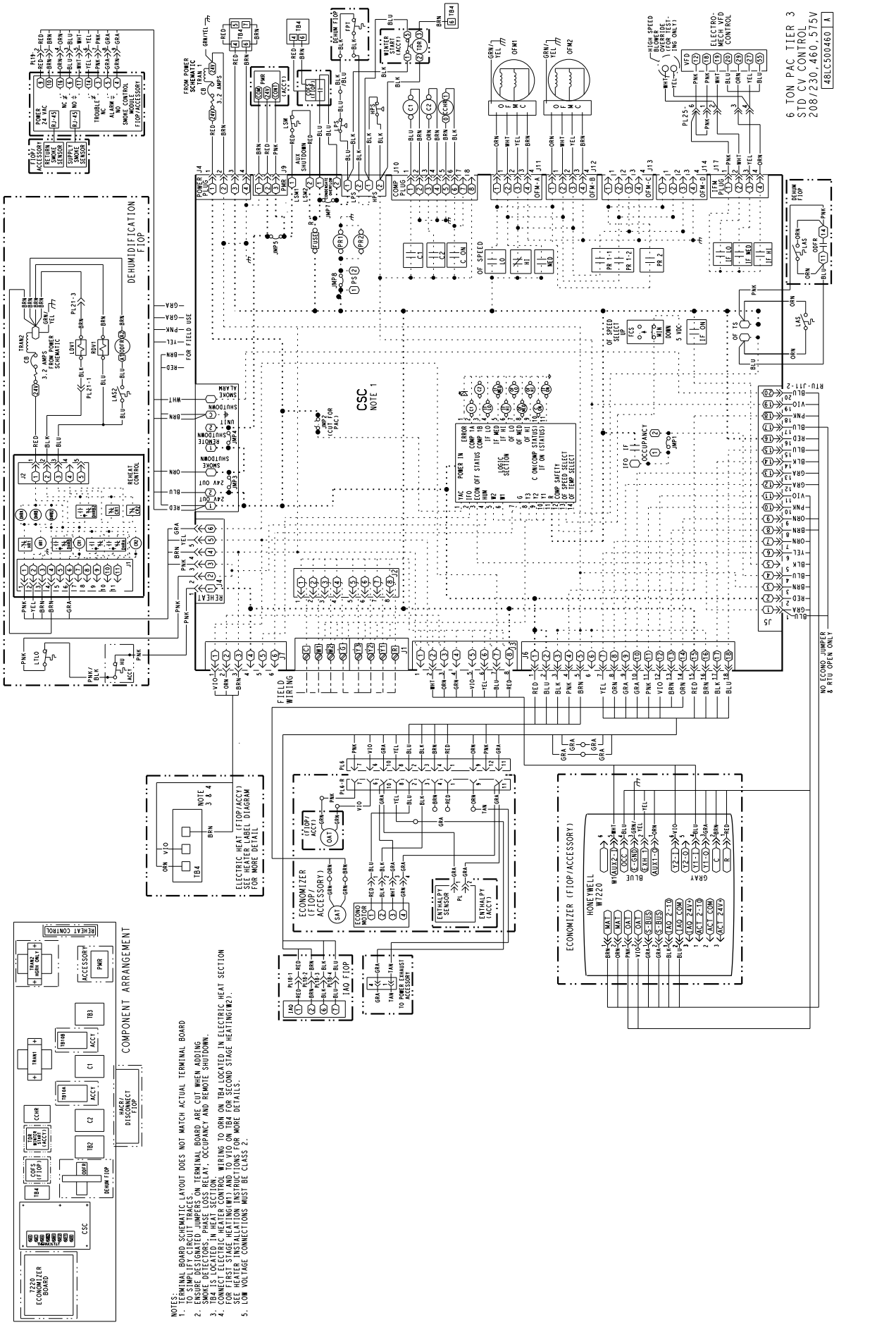

C13684

Fig. 34 - 50LC 07 Control Wiring Diagram

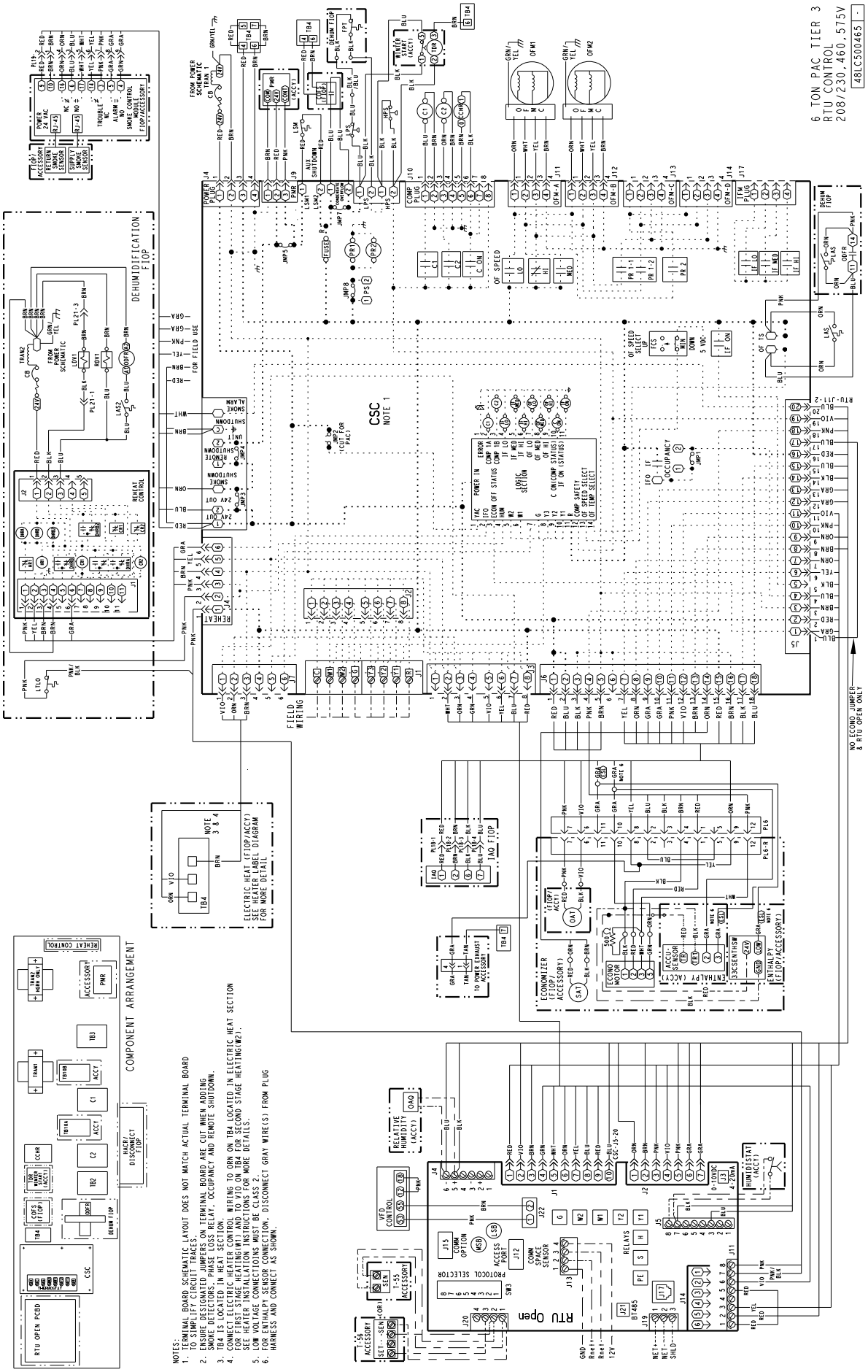

Fig. 35 - 50LC 07 RTU Open Control Wiring Diagram

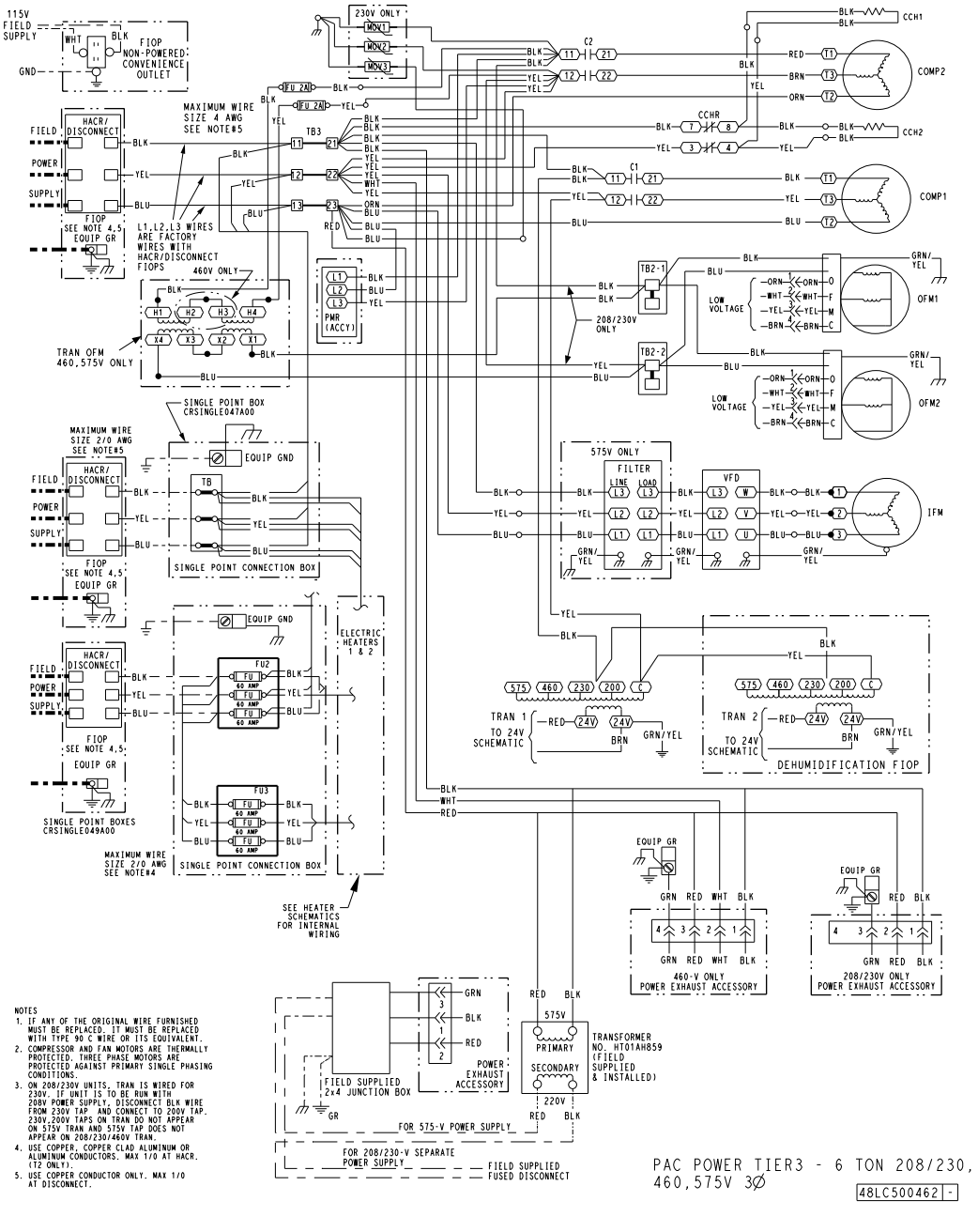

Fig. 36 - 50LC 07 Power Wiring Diagram, 208/230V, 460V and 575V Units

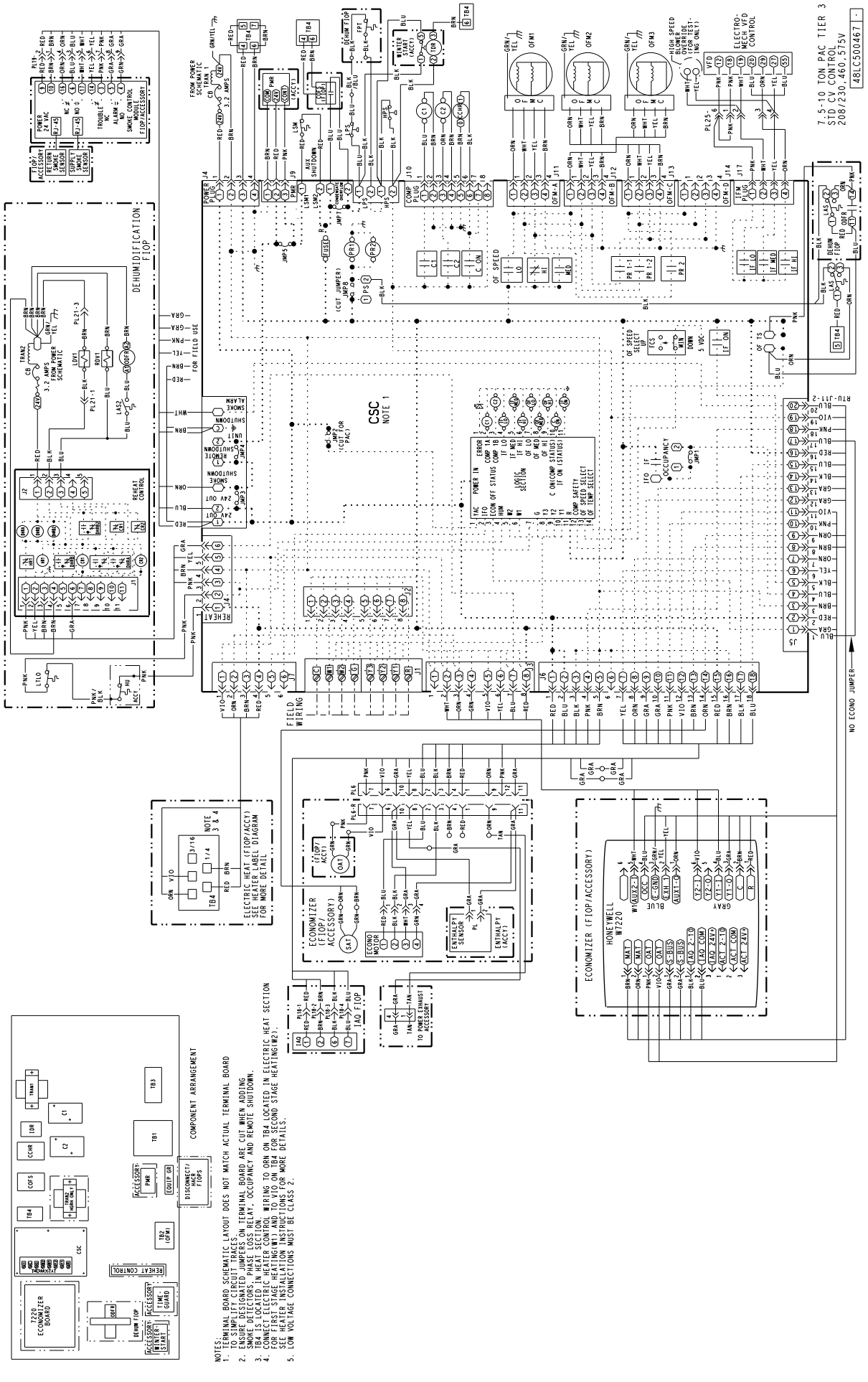

C13686

Fig. 37 - 50LC 08-12 Control Wiring Diagram

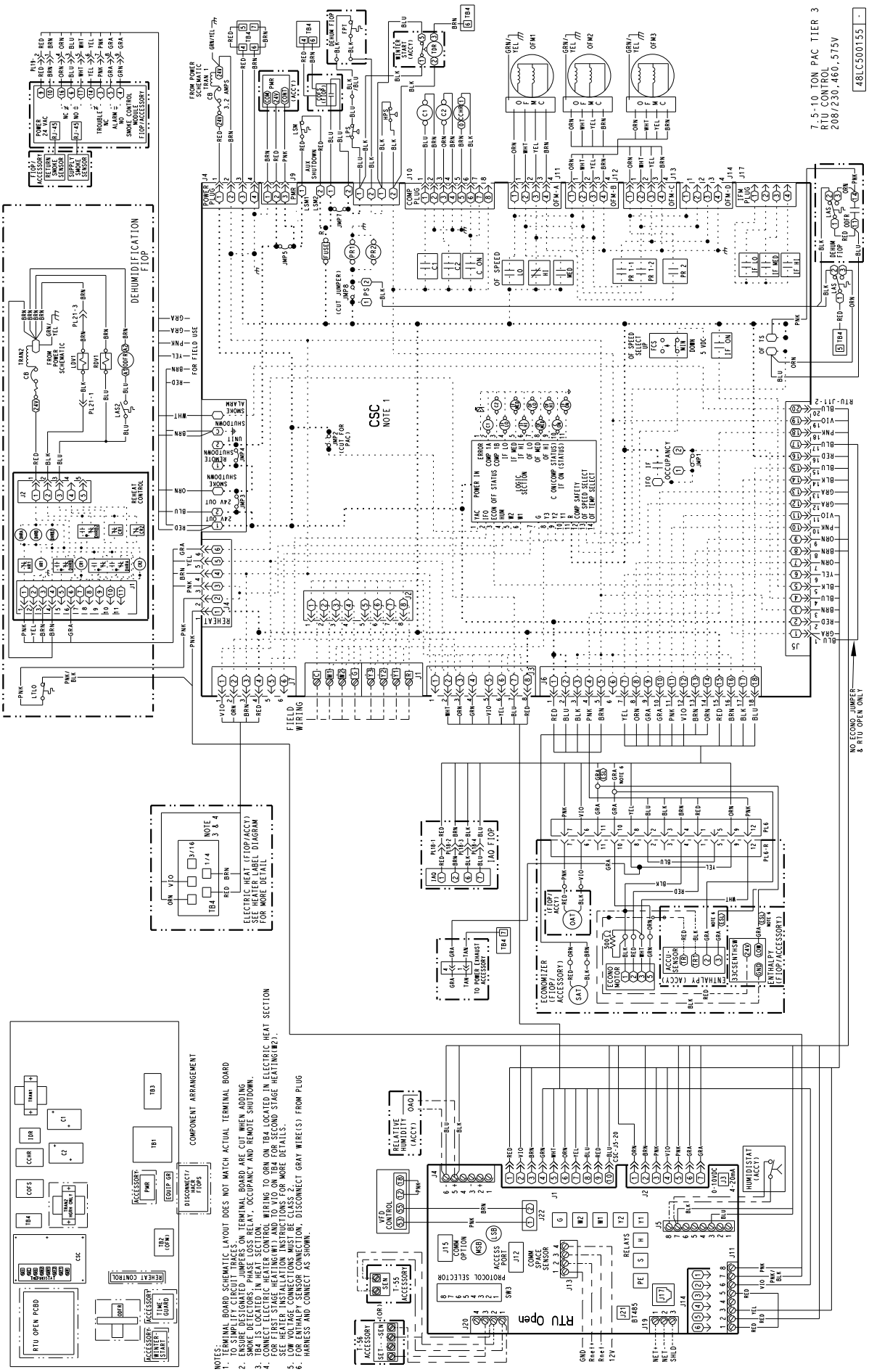

C13687

Fig. 38 - 50LC 08-12 RTU Open Control Wiring Diagram

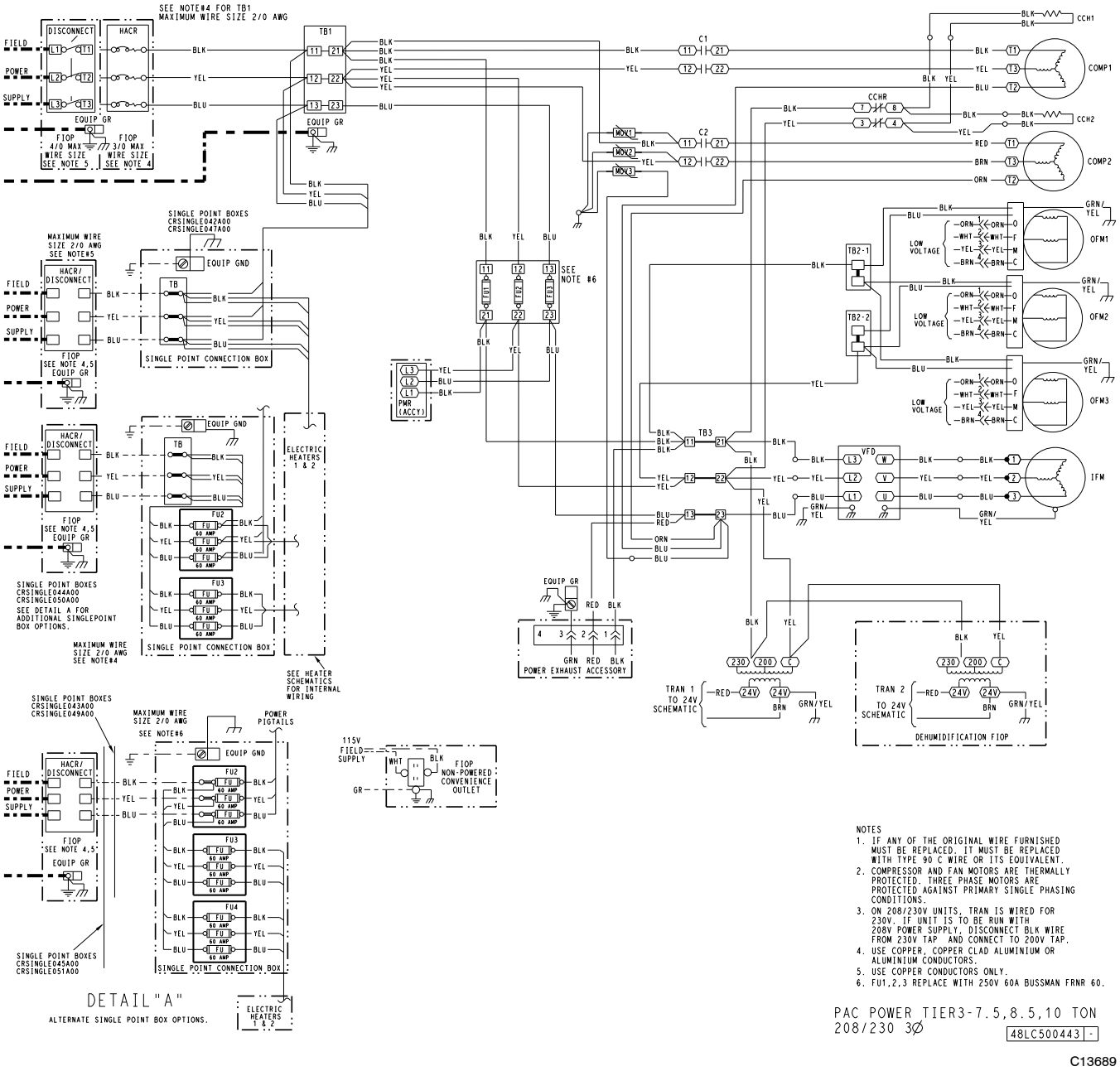

Fig. 39 - 50LC 08-12 Power Wiring Diagram, 208/230V Units

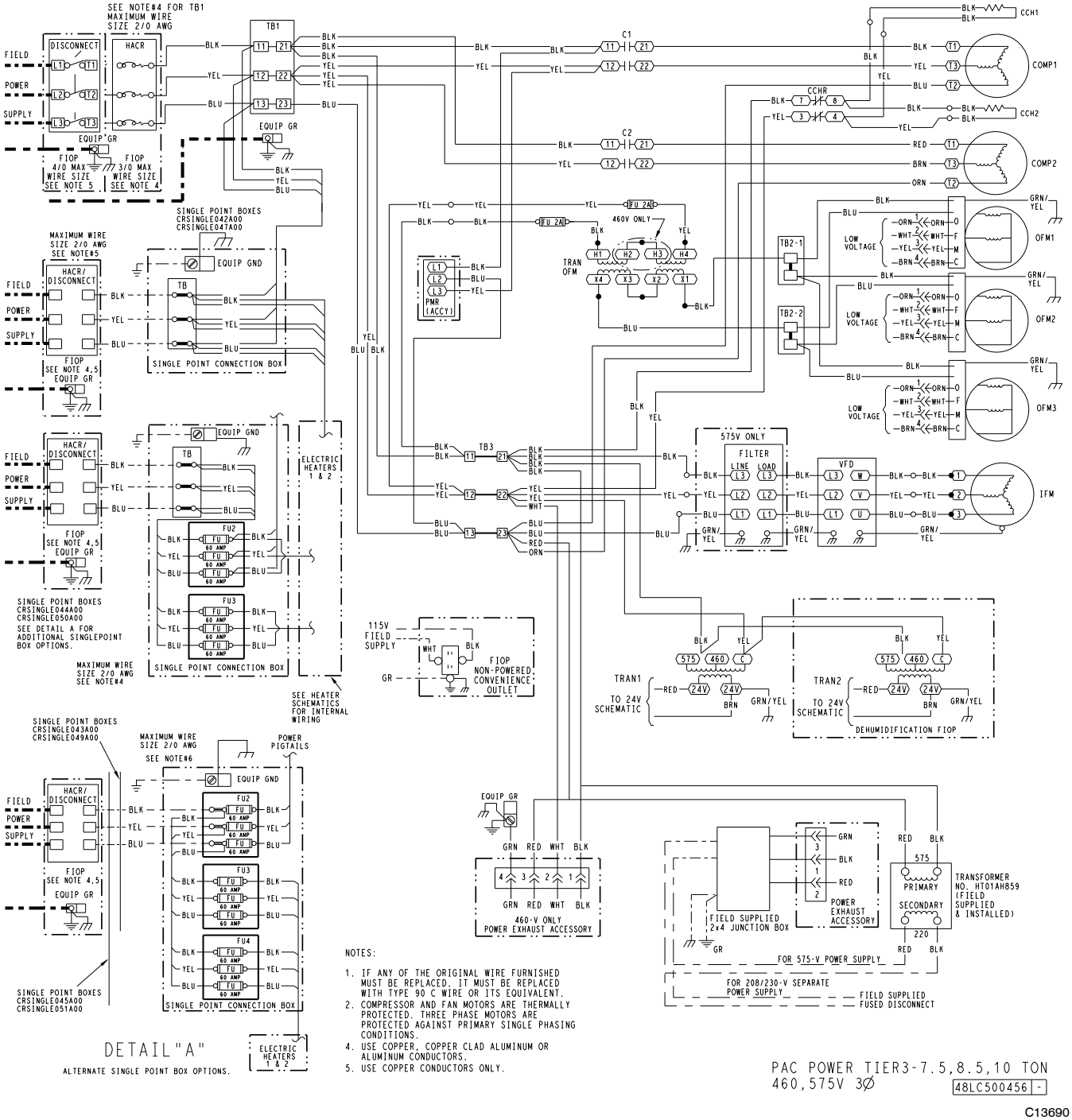

Fig. 40 - 50LC 08-12 Power Wiring Diagram, 460V, 575V Units

HACR —

The amp rating of the HACR factory installed option is based on the size, voltage, indoor motor and other electrical options of the unit as shipped from the factory. If field installed accessories are added or changed in the field (i.e. electric heat, power exhaust, ERV), the HACR may no longer be of the proper amp rating and therefore will need to be removed from the unit. See unit nameplate and label on factory installed HACR for the amp rating of the HACR that was shipped with the unit from the factory. See unit nameplates for the proper fuse, HACR or maximum over-current protection device required on the unit with field installed accessories.

⚠ CAUTION

The HACR circuit breaker is rated for 240V/480V Wye and Delta, and 600V Wye power supply. Do not connect to 600V Delta power supply. Severe damage to equipment would occur.

⚠ ATTENTION

Le voltage nominal du disjoncteur CACR est de 240V/480V en étoile-triangle, et 600V en étoile. Ne pas brancher sur une alimentation électrique de 600V en triangle. Cela causera de graves dommages à l'équipment.

48TM503700 -

C12105

Fig. 41 - HACR Caution Label

Factory-Option Thru-Base Connections —

This service connection kit consists of two $^1/_2$-in electrical bulkhead connectors and a $^3/_4$-in electrical bulkhead connector, all factory-installed in the embossed (raised) section of the unit basepan in the condenser section. The $^3/_4$-in bulkhead connector enables the low-voltage control wires to pass through the basepan. The $^1/_2$-in electrical bulkhead connector allows the high-voltage power wires to pass through the basepan. See Fig. 42.

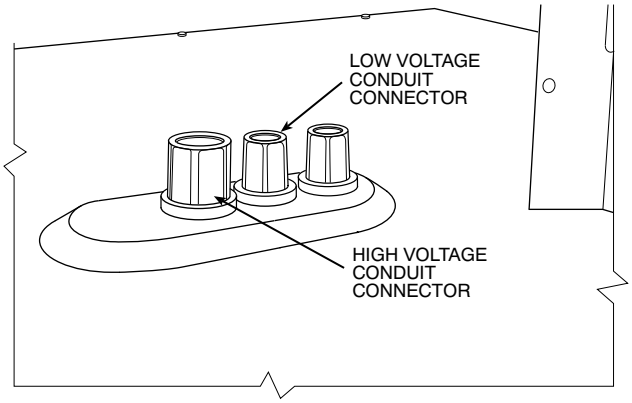

C13412

Fig. 42 - Thru-Base Connection Fittings

Check tightness of connector lock nuts before connecting electrical conduits.

Field-supplied and field-installed liquid tight conduit connectors and conduit may be attached to the connectors on the basepan. Pull correctly rated high voltage and low voltage through appropriate conduits. Connect the power conduit to the internal disconnect (if unit is so equipped) or to the external disconnect (through unit side panel). A hole must be field cut in the main control box bottom on the left side so the 24-v control connections can be made. Connect the control power conduit to the unit control box at this hole.

Units Without Thru-Base Connections —

1. Install power wiring conduit through side panel openings. Install conduit between disconnect and control box.
2. Install power lines to terminal connections as shown in Fig. NO TAG.

Field Control Wiring —

The 50LC unit requires an external temperature control device such as a thermostat (field-supplied).

Thermostat —

Install a Carrier-approved accessory thermostat according to installation instructions included with the accessory. For complete economizer function and 3 stage compressor operation select a three-stage cooling thermostat. If a 3-stage cooling thermostat is not available use a 2-stage cooling thermostat instead, but note that this will limit cooling to just 2 stages. When electric heat is installed in the 50HC unit, the thermostat must be capable of energizing the G terminal (to energize the Indoor Fan Contactor) whenever there is a space call for heat (energizing the W1 terminal). The accessory thermostats listed on the unit price pages can provide this signal but they are not configured to enable this signal as shipped.

Locate the thermostat accessory on a solid wall in the conditioned space to sense average temperature in accordance with the thermostat installation instructions.

If the thermostat contains a logic circuit requiring 24-v power, use a thermostat cable or equivalent single leads of different colors with minimum of eight leads. If the thermostat does not require a 24-v source (no "C" connection required), use a thermostat cable or equivalent with minimum of seven leads. Check the thermostat installation instructions for additional features which might require additional conductors in the cable.

For wire runs up to 50 ft. (15 m), use no. 18 AWG (American Wire Gage) insulated wire (35°C minimum). For 50 to 75 ft. (15 to 23 m), use no. 16 AWG insulated wire (35°C minimum). For over 75 ft. (23 m), use no. 14 AWG insulated wire (35°C minimum). All wire sizes larger than no. 18 AWG cannot be directly connected to the thermostat and will require a junction box and splice at the thermostat.

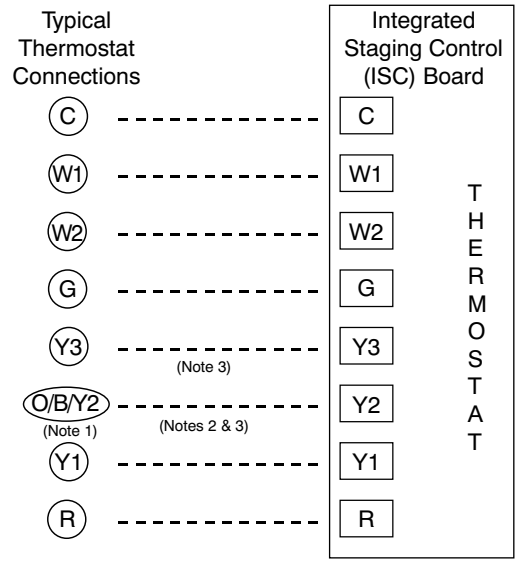

Note 1: Typical multi-function marking. Follow manufacturer's configuration Instructions to select Y2.

Note 2: Y2 to Y3 connection required for 2 stage cooling operation and when integrated economizer function is desired.

Note 3: To Connect a 2-Stage Thermostat:
Y2 to Y3 connection required for 2 stage cooling operation which provides low and high cooling states.

- - - Field Wiring

C13326

Fig. 43 - Low-Voltage Connections

Unit without Thru-Base Connection Kit —

Pass the thermostat control wires through the hole provided in the corner post; then feed the wires through the raceway built into the corner post to the control box. Pull the wires over to the terminal strip on the upper-left corner of the Controls Connection Board. See Fig. 44.

NOTE: If thru-the-bottom connections accessory is used, refer to the accessory installation instructions for information on routing power and control wiring.

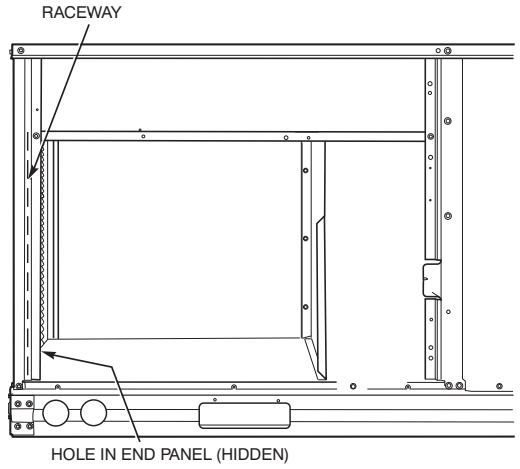

C08027

Fig. 44 - Field Control Wiring Raceway

Heat Anticipator Settings —

Set heat anticipator settings at 0.14 amp for the first stage and 0.14 amp for second-stage heating, when available.

Electric Heaters

50LC units may be equipped with factory or field-installed electric heaters. The heaters are modular in design, with heater frames holding open coil resistance wires strung through ceramic insulators, line-break limit switches and a control contactor. One or two heater modules may be used in a unit.

Heater modules are installed in the compartment below the indoor (supply) fan outlet. Access is through the indoor access panel. Heater modules slide into the compartment on tracks along the bottom of the heater opening. See Fig. 45, Fig. 46 and Fig. 47.

Not all available heater modules may be used in every unit. Use only those heater modules that are UL/ETL listed for use in a specific size unit. Refer to the label on the unit cabinet for the list of approved heaters.

Unit heaters are marked with Heater Model Numbers. But heaters are ordered as and shipped in cartons marked with a corresponding heater Sales Package part number. See Table 6 for correlation between heater Model Number and Sales Package part number.

NOTE: The value in position 9 of the part number differs between the sales package part number (value is 1) and a bare heater model number (value is 0).

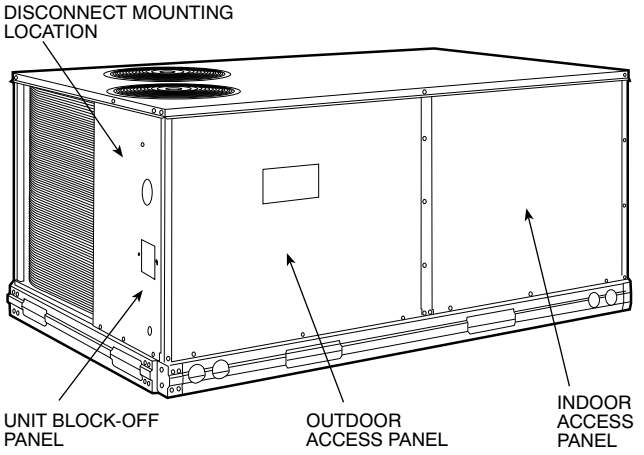

C13204

Fig. 45 - Access Panel Locations

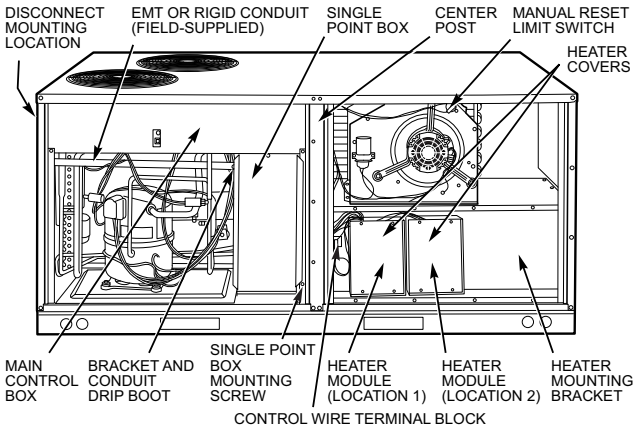

C13205

Fig. 46 - Component Locations

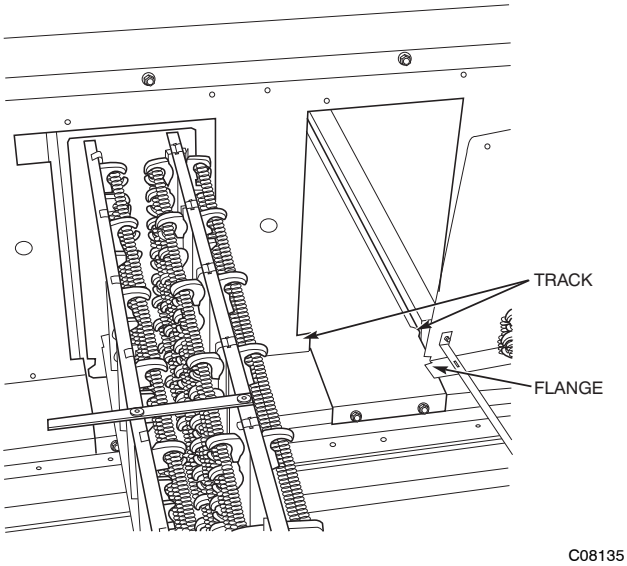

Fig. 47 - Typical Module Installation

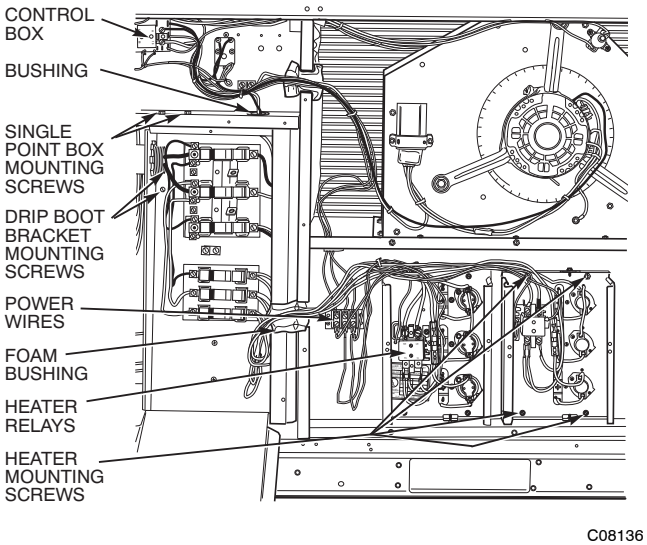

Fig. 48 - Typical Single Point Installation

Table 6 – Heater Model Number

Bare Heater Model Number	C	R	H	E	A	T	E	R	0	0	1	A	0	0
Heater Sales Package PNO Includes: **Bare Heater** **Carton and packing materials** **Installation sheet**	C	R	H	E	A	T	E	R	1	0	1	A	0	0

Single Point Boxes and Supplementary Fuses —

When the unit MOCP device value exceeds 60-A, unit-mounted supplementary fuses are required for each heater circuit. These fuses are included in accessory Single Point Boxes, with power distribution and fuse blocks. The single point box will be installed directly under the unit control box, just to the left of the partition separating the indoor section (with electric heaters) from the outdoor section. The Single Point Box has a hinged access cover. See Fig. 48. The Single Point Box also includes a set of power taps and pigtails to complete the wiring between the Single Point Box and the unit's main control box terminals. Refer to the accessory heater and Single Point Box installation instructions for details on tap connections or field installed electric heat accessory.

All fuses on 50LC units are 60-A. (Note that all heaters are qualified for use with a 60-A fuse, regardless of actual heater ampacity, so only 60-A fuses are necessary.)

Single Point Boxes without Fuses —

Some unit heater applications not requiring supplemental fuses require a special Single Point Box without any fuses. The accessory Single Point Boxes contain a set of power taps and pigtails to complete the wiring between the Single Point Box and the unit's main control box terminals. Refer to accessory heater and Single Point Box installation instructions for details on tap connections or field installed electric heat accessory.

Low-Voltage Control Connections —

Pull the low-voltage control leads from the heater module(s) - VIO and BRN (two of each if two modules are installed; identify for Module #1) - to the 4-pole terminal board TB4 located on the heater bulkhead to the left of Heater #1. Connect the VIO lead from Heater #1 to terminal TB4-1. For 2 stage heating, connect the VIO lead from Heater #2 to terminal TB4-2. For 1 stage heating with 2 heater modules connect the VIO lead from both Heater #1 and #2 to terminal TB4-1. Connect both BRN leads to terminal TB4-3. See Fig. 49.

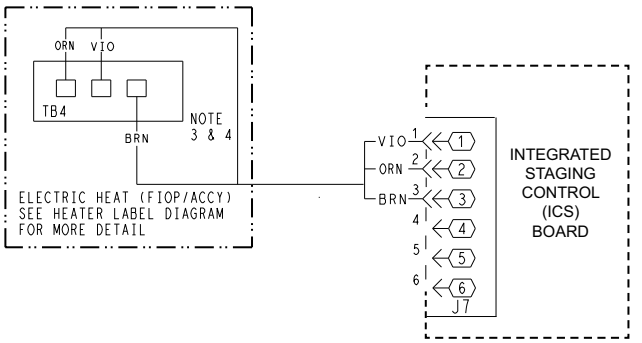

NOTES:
3. TB4 IS LOCATED IN HEAT SECTION.
4. CONNECT ELECTRIC HEATER CONTROL WIRING TO ORN ON TB4 LOCATED IN ELECTRIC HEAT SECTION FOR FIRST STAGE HEATING(W1) AND TO VIO ON TB4 FOR SECOND STAGE HEATING(W2). SEE HEATER INSTALLATION INSTRUCTIONS FOR MORE DETAILS.

C13260

Fig. 49 - Optional or Accessory Electric Heater Control Connections

RTU Open (Factory Option)

For details on operating 50LC*007 units equipped with the factory installed RTU Open option refer to *48/50LC 07-26 Factory Installed Option RTU Open Multi-Protocol Controller Controls, Start-up, Operation and Troubleshooting* (Catalog No. 48-50LC-7-26-1T, or later).

Integrated Staging Control (ISC) Board

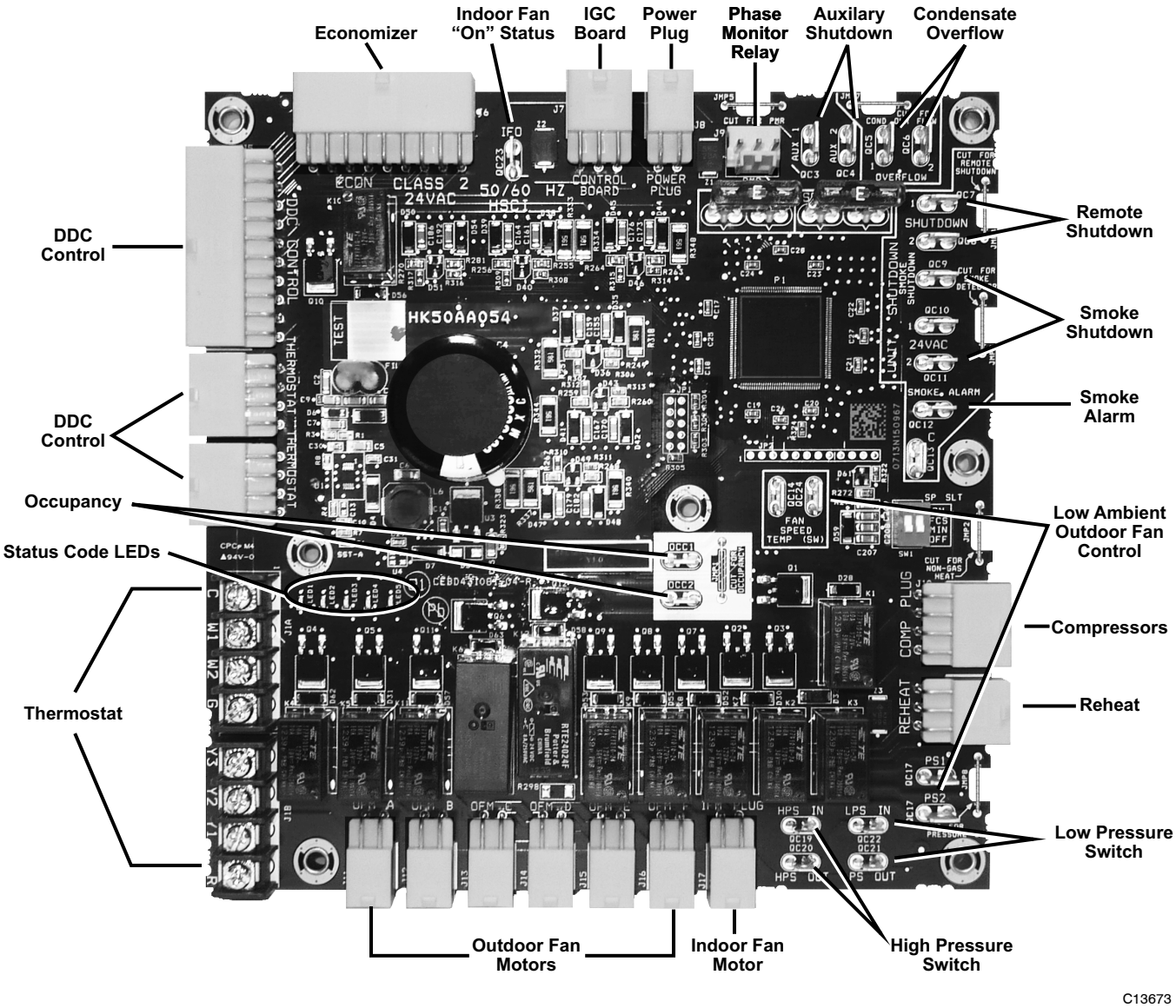

Fig. 50 - Integrated Staging Control (ISC) Board

ISC Board - Sequence of Operation

General —

The Carrier Integrated Staging Control (ISC) is intended for use with a standard thermostat or direct digital control (DDC) capable of three cooling stages. After initial power to the board, a Green LED will blink with a 1 second duty cycle indicating the unit is running properly. In the event of the ISC board failing, the Green LED will be OFF or continuously ON. When the unit is not running properly, the Green LED will blink along with Red LED lights. The Red LED light configuration will indicate the type of error the board has identified. See Fig. 50 for LED locations and Table 7 for a list of status codes.

The ISC board can be remotely shutdown by removing Jumper 4 and wiring to the Remote Shutdown terminal. The Smoke Control Module can shutdown the unit by removing Jumper 3 and wiring to the Smoke Shutdown terminal. The Smoke Alarm terminal on the ISC Board provides a pass thru connection should a smoke alarm signal be connected. In the case of the RTU Open option, the RTU Open controller provides the signal which is passed thru the ISC board to the Smoke Alarm terminal.

The crankcase heater will run at all times except when the compressors are running. An auxiliary power supply (24Vac) available at TB-4 Terminal is provided to power auxiliary equipment. An optional Phase Monitor Relay can be wired to the PMR terminal by removing Jumper 5. An optional Condensate Flow Switch can be wired to the COFS Terminal by removing Jumper 7.

Ventilation —

In the Ventilation/Fan Mode (G on the thermostat), the indoor-fan will run at low speed and the damper will operate at minimum position.

Table 7 – Status Code Descriptions for ISC Board LEDs

ERROR#	ERROR NAME	LED INDICATION				
		LED01	LED02	LED03	LED04	LED05
1	Check Smoke Detector/PMR/AUX		RED	Blinking Green LED (Note 1)		
2	Check HPS/LPS/COFS	RED	RED			
3	Call for Y3 with no call for Y1. Check Y1 wiring.				RED	
4	Call for Y3 with no call for Y1/Y2. Check Y1 wiring.				RED	RED
5	Call for Y2 with no call for Y1. Check Y1 wiring.		RED		RED	
6	Call for W2 with no call for W1. Check W1 wiring.	RED				RED
7	Call for heat (W1/W2) and cooling (Y1/Y2/Y3). Check thermostat wiring.	RED	RED		RED	RED
8	Call for heat (W1/W2) with no G. Check G wiring.		RED		RED	RED
9	Call for cooling (Y1/Y2/Y3) with no G. Check G wiring	RED	RED		RED	
10	Call for heat (W1/W2) and cooling (Y1/Y2/Y3) with no G. Check thermostat and G wiring.	RED	RED			RED
11	Check ISC Board and the thermostat wiring	RED			RED	RED
12	Check ISC Board and the thermostat wiring	RED				
13	Check ISC Board and the thermostat wiring	RED			RED	
14	Check ISC Board and the thermostat wiring					RED
15	Check ISC Board and the thermostat wiring		RED			RED

NOTES: 1. Green LED Blinking at 1HZ indicates normal operation.
2. Solid red LED indicates an error exists, see above LED configuration.

Cooling —

In the Cooling Mode, the small and large compressors will be sequenced to maintain the thermostat temperature setpoint. The chart below shows the cooling operation based on the following conditions.

INPUT	OUTPUT			
Thermostat	Compressor C1	Compressor C2	Indoor Fan Speed	Outdoor Fan Speed
First Stage Cooling (Y1)	On	Off	Low	Low (700 rpm)
Second Stage Cooling (Y2)	Off	On	Medium	Medium (800 rpm)
Third Stage Cooling (Y3)	On	On	High	High (1000 rpm)

The outdoor fan and VFD controlled indoor-fan will operate at low, medium and high speed. The RPM is factory set by the CFM and static pressure requirements for the unit installed.

Economizer (Optional) —

When the Economizer is in Free Cooling Mode and a demand for cooling exist (Y1 on the thermostat), the Economizer will modulate the outdoor-air damper to provide a 50°F (10°C) to 55°F (13°C) mixed-air temperature into the zone and run the indoor-fan at high speed. As mixed-air temperature fluctuates above 55 ºF (13°C) or below 50°F (10°C) dampers will be modulated (open or close) to bring the mixed-air temperature back within control. Upon more call for cooling (Y2 on the thermostat), the outdoor-air damper will maintain its current position, compressor C1 will run and the outdoor-fan will run at low speed. If there is further demand for cooling, the outdoor-air damper will maintain its current position, compressor C2 will run and the outdoor-fan will run at medium speed. The VFD controlled indoor-fan will operate at high speed regardless of the cooling demand.

If the increase in cooling capacity causes the mixed-air temperature to drop below 45°F (7°C), the outdoor-air damper will return to the minimum position. If the mixed-air temperature continues to fall, the outdoor-air damper will close. Control returns to normal once the mixed-air temperature rises above 48°F (9°C). The power exhaust fans will be energized and de-energized, if installed, as the outdoor-air damper opens and closes.

In field-installed accessory CO_2 sensors are connected to the Economizer, a demand controlled ventilation strategy will begin to operate. As the CO_2 level in the zone increases above the CO_2 set-point, the minimum position of the damper will be increased proportionally. As the CO_2 level decreases because of the increase of fresh air, the outdoor-air damper will be proportionally closed. For economizer operation, there must be a thermostat call for the fan (G). If the unit is occupied and the fan is on, the damper will operate at minimum position. Otherwise, the damper will be closed.

Low Ambient Cooling Operation down to 40°F (4°C) —

In Low Ambient RTU conditions when the temperature is between 55°F (13°C) and 40°F (4°C), the Low Ambient Switch (LAS) will be active and the outdoor-fans will run to the pre-set factory outdoor-fan speed. When the temperature is greater than 65°F (18°C), the Low Ambient Switch will deactivate and the outdoor-fans will run in the standard cooling mode. If the Outdoor Fan Select Switch (see Fig. 51) is in the up position, the outdoor fans will run in the Fan Cycle Speed Mode (FCS) set to 250 rpm. If the Outdoor Fan Select Switch is in the down position, the outdoor fans will run in the Minimum Fan Speed Mode (MIN) set to 160 rpm regardless of the cooling demand.

LC Size 07 Units have a SPST normally open Low Ambient Switch wired across the TS and OF terminal and a jumper placed across the PS terminal (see Fig. 52). When the LAS is active, the switch will close making contact to the OF terminal. This is done for units that

require all outdoor fans to run at the same pre-set factory Low Ambient Speed.

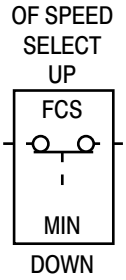

C13327

Fig. 51 - Outdoor Fan Speed Select Switch

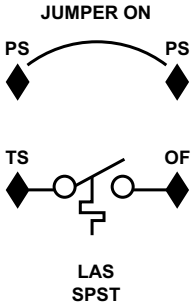

C13328

Fig. 52 - Schematic of SPST Low Ambient Switch

The Low Ambient Temperature Outdoor Fan Control Table (below) shows the operation of the outdoor fan for size 07 units.

Table 8 – Low Ambient Temperature Outdoor Fan Control

LC Size	No. of Fans On	No. of Fans Off	Switch	Outdoor Fan Select Switch	RPM
07	2	0	SPST	Up	250
08	2	1	(1) SPDT	Down	160
09	2	1	(1) SPDT	Down	160
12	2	1	(1) SPDT	Down	160

Heating —

In the Heating Mode (W1 on the thermostat), power is applied to the G and W1 terminal at the ISC board and energizes the first state of electric heat. Upon more call for heat (W2 at the thermostat), power is applied to the G and W2 terminal at the ISC board and energizes the second state of electric heat. The VFD controlled indoor fan will operate at high speed regardless of the heating demand.

EconoMi$er X (Factory-Installed Option)

EconoMi$er X is an ultra low leak economizer system which is available for 50LC 07-12 units.

The factory-installed option consists of:

- Low leak economizer damper assembly
- Direct-drive damper actuator with local equipment bus communications
- W7220 economizer controller with keypad and display
- Supply Air Temperature sensor (20K ohm)
- Outdoor changeover condition sensor (either 20K ohm dry-bulb or enthalpy sensor)

Unit Installation —

All damper hardware and standard economizer control components except the enthalpy sensor are factory-mounted in their operating location. Complete the unit installation by relocating the enthalpy sensor (when provided; see below), then assembling and mounting the unit's outside air hood. Refer to the base unit's installation instruction manual for directions on locating the hood parts package and assembling the hood with filters.

Enthalpy Sensor Relocation —

See Fig. 61 for view of the enthalpy sensor. Locate the enthalpy sensor on the side of the economizer housing; remove mounting screws and save screws. Confirm the DIP switches are set at OFF, OFF, OFF (see Table 16). Move the enthalpy sensor to the front face of the economizer housing and mount per label.

W7220 Economizer Controller

The economizer controller used on electro mechanical units is the Honeywell W7220.

The W7220 provides typical economizer functions, including:

- Management of outside air damper for base unit Occupied (damper open and modulating) and unit OFF or Unoccupied status (damper closed)
- Free-cooling using all outside air when outdoor conditions permit Integrated cooling operation using outside air and mechanical cooling when required
- Demand Control Ventilation (DCV) for modulating ventilation airflow according to space CO_2 level (requires factory-option or field-installed CO_2 sensor)

The W7220 control also includes a new capability that will adjust the damper control points during DCV or minimum ventilation operation as the indoor fan speed is changed. This control function ensures that required space ventilation airflow quantities are maintained during reduced fan speed operation.

Additional control capabilities include automatic detection of new sensors and detection of sensor failure or loss of communication.

The W7220 control module includes an integral user interface with keypad and LCD display that permits direct input of setpoint values and configurations and display of status and alarms.

The W7220 controller is located in the RTU base unit's Control Box. See the Installation Instructions for this base unit for the location of the Control Box access panel.

User Interface —

The user interface consists of a 2-line LCD display and a 4-button keypad on the front of the economizer controller.

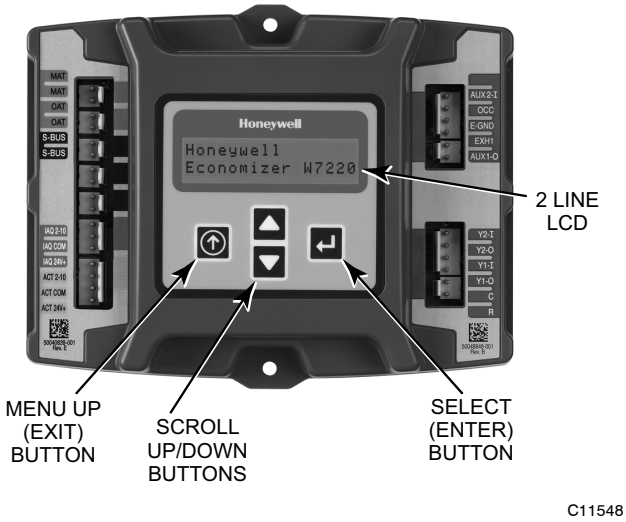

Fig. 53 - W7220 Controller

Keypad —

The four navigation buttons (see Fig. 53) are used to scroll through the menus and menu items, select menu items, and to change parameter and configuration settings.

Using the Keypad with Menus —

To use the keypad when working with menus:

- Press the ▲ (Up arrow) button to move to the previous menu.
- Press the ▼ (Down arrow) button to move to the next menu.
- Press the ↵ (Enter) button to display the first item in the currently displayed menu.
- Press the ⓪ (Menu Up/Exit) button to exit a menu's item and return to the list of menus.

The Menus in display order are:

- STATUS
- SETPOINTS
- SYSTEM SETUP
- ADVANCED SETUP
- CHECKOUT
- ALARMS

Using the Keypad with Settings and Parameters —

To use the keypad when working with Setpoints, System and Advanced Settings, Checkout tests and Alarms:

3. Navigate to the desired menu.
4. Press the ↵ (Enter) button to display the first item in the currently displayed menu.
5. Use the ▲ and ▼ buttons to scroll to the desired parameter.
6. Press the ↵ (Enter) button to display the value of the currently displayed item.
7. Press the ▲ button to increase (change) the displayed parameter value.
8. Press the ▼ button to decrease (change) the displayed parameter value.

   NOTE: When values are displayed, pressing and holding the ▲ or ▼ button causes the display to automatically increment.
9. Press the ↵ (Enter) button to accept the displayed value and store it in nonvolatile RAM.
10. "CHANGE STORED" displays.
11. Press the ↵ (Enter) button to return to the current menu parameter.
12. Press the ⓪ (Menu Up/Exit) button to return to the previous menu.

Menu Structure

IMPORTANT: Table 9 illustrates the complete hierarchy. Your menu parameters may be different depending on your configuration. For example if you do not have a DCV (CO_2) sensor, then none of the DCV parameters appear.

The menu hierarchy has been modified to reflect controller configuration for 2-speed indoor fan application in the Staged Air Volume option.

NOTE: Some parameters in the menus use the letters MA or MAT, indicating a mixed air temperature sensor location before the cooling coil. This unit application has the control sensor located after the cooling coil, in the fan section, where it is designated as (Cooling) Supply Air Temperature or SAT sensor.

Table 9 – Menu Structure[a1]

Menu	Parameter	Parameter Default Value	Parameter Range and Increment[b]	EXPANDED PARAMETER NAME Notes
STATUS	ECON AVAIL	NO	YES/NO	ECONOMIZING AVAIALBLE YES = economizing available; the system can use outside air for free cooling when required
	ECONOMIZING	NO	YES/NO	ECONOMIZING ACTIVE YES = Outside air being used for 1st stage cooling. NO = Economizing not active
	OCCUPIED	NO	YES/NO	OCCUPIED YES = OCC signal received from space thermostat or unitary controller. YES = 24 Vac on terminal OCC. NO = 0 Vac on terminal OCC.
	HEAT PUMP	n/a[c]	COOL HEAT	HEAT PUMP MODE (Not available on 2–Speed configuration)
	COOL Y1–IN	OFF	ON/OFF	FIRST STAGE COOLING DEMAND (Y1–IN) Y1–I signal from space thermostat or unitary controller for Cooling Stage 1. ON = 24 Vac on terminal Y1–I OFF = 0Vac on terminal Y1–I
	COOL Y1–OUT	OFF	ON/OFF	FIRST STAGE COOLING RELAY OUTPUT ON = 24 Vac on terminal Y1–O; Stage 1 mechanical cooling called on OFF = 0 Vac on terminal Y1–O; no mechanical cooling
	COOL Y2–IN	OFF	ON/OFF	SECOND STAVE COOLING DEMAND (Y2–IN) Y2–I signal from space thermostat or unitary controller for Cooling Stage 2. ON = 24 Vac on terminal Y2–I OFF = 0 Vac on terminal Y2–I
	COOL Y2–OUT	OFF	ON/OFF	SECOND STAGE COOLING RELAY OUTPUT ON = 24 Vac on terminal Y2–O; Stage 2 mechanical cooling called on OFF = 0 Vac on terminal Y2–O; no Stage 2 mechanical cooling
	MA TEMP	nn°F (or °C)	0 to 140°F (–18 to 60°C)	SUPPLY AIR TEMPERATRUE, Cooling Mode Displays value of measured mixed/cooled air from SAT sensor in fan section. Displays ––.– if not connected, short or out–of–range. See Menu Note 2
	DA TEMP	nn°F (or °C)	0 to 140°F (–18 to 60°C)	DISCHARGE AIR TEMPERATRUE, after Heating section (Accessory sensor required) Displays when Discharge Air sensor is connected and displays measured discharge temperature. Displays –– –– –– if sensor sends invalid value, if not connected, short or out–of–range.
	OA TEMP	nn°F (or °C)	–40 to 140°F (–40 to 60°C)	OUTSIDE AIR TEMPERATRUE Displays measured value of outdoor air temperature. Displays –– –– –– if sensor sends invalid value, if not connected, short or out–of–range.
	OA HUM	nn%	0 to 100%	OUTSIDE AIR RELATIVE HUMIDITY Displays measured value of outdoor humidity from OA enthalpy sensor.
	RA TEMP	nn°F (or °C)	0 to 140°F (–18 to 60°C)	RETURN AIR TEMPERATRUE (Accessory sensor required) Displays measured value of return air temperature from RAT sensor.
	RA HUM	nn%	0 to 100%	RETURN AIR RELATIVE HUMIDITY (Accessory enthalpy sensor required) Displays measured value of return air humidity from RA sensor.
	IN CO2	___ppm	0 to 2000 ppm	SPACE/RETURN AIR CO2 (CO_2 sensor required, accessory or factory option) Displays value of measured CO_2 from CO_2 sensor. Invalid if not connected, short or out–of–range
	DCV STATUS	n/a	ON/OFF	DEMAND CONTROL VENTILATION STATUS (CO_2 sensor required, accessory or factory option) Displays ON if IN CO2 value above setpoint DCV SET and OFF if below setpoint DCV SET.
	DAMPER OUT	2.0V	2.0 to 10.0V	Displays voltage output to the damper actuator. 0% = OSA Damper fully closed 100% = OSA Damper full open See Menu Note 3.
	ACT POS	nn%	0 to 100%	Displays actual position of outdoor air damper actuator 2.0V = OSA Damper fully–closed 10.0V = OSA Damper full open
	ACT COUNT	n/a	1 to 65535	Displays number of times actuator has cycled. 1 Cycle equals accrued 180° of actuator movement in any direction
	ACTUATOR	n/a	OK/Alarm (on Alarm menu)	Displays Error if voltage or torque is below actuator range
	EXH1 OUT	OFF	ON/OFF	EXHAUST STAGE 1 RELAY OUTPUT Output of EXH1 terminal: ON = relay closed OFF = relay open

Table 9 - Menu Structure[a] (cont)

Menu	Parameter	Parameter Default Value	Parameter Range and Increment[b]	EXPANDED PARAMETER NAME Notes
STATUS	EXH2 OUT	OFF	ON/OFF	EXHAUST STAGE 2 RELAY OUTPUT Output of AUX terminal; displays only if AUX = EXH2 ON = relay closed OFF = relay open
	MECH COOL ON	0	0, 1, or 2	Displays stage of mechanical cooling that is active.
	FAN SPEED	n/a	LOW or HIGH	SUPPLY FAN SPEED Displays speed setting of fan on a 2−speed fan unit.
	W (HEAT ON)	n/a	ON/OFF	HEAT DEMAND STATUS Displays status of heat demand on a 2−speed fan unit.
SETPOINTS	MAT SET	53°F (12°C)	38 to 65°F; (3 to 18°C) increment by 1	SUPPLY AIR SETPOINT Setpoint determines where the economizer will modulate the OA damper to maintain the mixed air temperature. See Menu Note 2.
	LOW T LOCK	32°F (0°C)	−45 to 80°F; (−43 to 27°C) increment by 1	COMPRESSOR LOW TEMPERATURE LOCKOUT Setpoint determines outdoor temperature when the mechanical cooling cannot be turned on.
	DRYBLB SET	63°F (17°C)	48 to 80°F (9 to 27°C) increment by 1	OA DRY BULB TEMPERATURE CHANGEOVER SETPOINT Setpoint determines where the economizer will assume outdoor air temperature is good for free cooling; e.g.: at 63°F (17°C), unit will economize at 62°F (16.7°C) and below and not economize at 64°F (17.8°C) and above. There is a 2°F (1.1°C)deadband. See Menu Note 3
	ENTH CURVE	ES3	ES1, ES2, ES3, ES4, or ES5	ENTHALPY CHANGEOVER CURVE (Requires enthalpy sensor option) Enthalpy boundary “curves” for economizing using single enthalpy.
	DCV SET	1100ppm	500 to 2000 ppm; increment by 100	DEMAND CONTROL VENTILATION SETPOINT Displays only if CO_2 sensor is connected. Setpoint for Demand Control Ventilation of space. Above the setpoint, the OA dampers will modulate open to bring in additional OA to maintain a space ppm level below the setpoint.
	MIN POS L	6.0 V	2 to 10 Vdc	VENTILATION MINIMUM POSITION AT LOW SPEED Displays ONLY if a CO_2 sensor is NOT connected.
	MIN POS H	4.4 V	2 to 10 Vdc	VENTILATION MINIMUM POSITION AT HIGH SPEED Displays ONLY if a CO_2 sensor is NOT connected.
	VENTMAX L	6.0 V	2 to 10 Vdc	DCV MAXIMUM DAMPER POSITION AT LOW SPEED (Requires CO_2 sensor connected)
	VENTMAX H	4.4 V	2 to 10 Vdc	DCV MAXIMUM DAMPER POSITION AT HIGH SPEED (Requires CO_2 sensor connected)
	VENTMIN L	3.7 V	2 to 10 Vdc	DCV MINIMUM DAMPER POSITION AT LOW SPEED (Requires CO_2 sensor connected)
	VENTMIN H	2.8 V	2 to 10 Vdc	DCV MINIMUM DAMPER POSITION AT HIGH SPEED (Requires CO_2 sensor connected)
	EXH1 L SET	65%	0 to 100%; Increment by 1	EXHAUST FAN STAGE 1 SETPOINT AT LOW SPEED Setpoint for OA damper position when exhaust fan1 is powered by the economizer
	EXH1 H SET	50%	0 to 100%; Increment by 1	EXHAUST FAN STAGE 1 SETPOINT AT HIGH SPEED Setpoint for OA damper position when exhaust fan1 is powered by the economizer
	EXH2 L SET	80%	0 to 100%; Increment by 1	EXHAUST FAN STAGE 2 SETPOINT AT LOW SPEED Setpoint for OA damper position when exhaust fan1 is powered by the economizer. Only used when AUX1−O is set to EHX2.
	EXH2 H SET	75%	0 to 100%; Increment by 1	EXHAUST FAN STAGE 2 SETPOINT AT HIGH SPEED Setpoint for OA damper position when exhaust fan1 is powered by the economizer. Only used when AUX1−O is set to EHX2.

Table 9 - Menu Structure[a] (cont)

Menu	Parameter	Parameter Default Value	Parameter Range and Increment[b]	EXPANDED PARAMETER NAME Notes
SYSTEM SETUP	INSTALL	01/01/10		Display order = MM/DD/YY Setting order = DD, MM, then YY.
	UNITS DEG	°F	°F or °C	Sets economizer controller in degrees Fahrenheit or Celsius.
	EQUIPMENT	CONV	Conventional or HP	CONV = conventional; HP O/B = Enable Heat Pump mode. Not available with 2−speed See Menu Note 4
	AUX2 I	W	W required for 2−speed mode	W = Informs controller that system is in heating mode. SD = Enables configuration of shutdown (not available on 2−Speed) See Menu Note 4
	FAN TYPE	2speed	2speed required	Sets the economizer controller for operation of 1 speed or 2 speed indoor fan system. See Menu Note 4.
	FAN CFM	5000cfm	100 to 15000 cfm; increment by 100	UNIT DESIGN AIRFLOW (CFM) Enter ONLY of using DCVCAL ENA = AUTO The value is found in the Project Submittal documents for the specific RTU.
	AUX OUT	NONE	NONE EXH2 SYS	Select OUTPUT for AUX1 O relay NONE = not configured (output is not used) EXH2 = second damper position relay closure for second exhaust fan SYS = use output as an alarm signal
	OCC	INPUT	INPUT or ALWAYS	OCCUPIED MODE BY EXTERNAL SIGNAL When using a setback thermostat with occupancy out (24 Vac), the 24 Vac is input to the OCC terminal. RTU control circuit provides 24−Vac to OCC through OCCUPIED terminals on Integrated Staging Control Board. See Menu Note 2.
	FACTORY DEFAULT	NO	NO or YES	Resets all set points to factory defaults when set to YES. LCD will briefly flash YES and change to NO but all parameters will change to the factory default values. **RECHECK AUX2 I and FANTYPE for required 2−speed values.**
ADVANCED SETUP	MA LO SET	45°F (7°C)	35 to 55°F; (2 to 12°C) Incremented by 1°	SUPPLY AIR TEMPERATURE LOW LIMIT Temperature to achieve Freeze Protection (close damper and alarm if temperature falls below setup value)
	FREEZE POS	CLO	CLO or MIN	FREEZE PROTECTION DAMPER POSITION Damper position when freeze protection is active CLO = closed MIN = MIN POS or VENTMAX
	CO2 ZERO	0ppm	0 to 500 ppm: Increment by 10	CO_2 ppm level to match CO_2 Sensor start level.
	CO2 SPAN	2000ppm	1000 to 3000 ppm; Increment by 50	CO_2 ppm span to match CO_2 sensor.
	STG3 DLY	2.0h	0 min, 5 min, 15 min, then 15 min intervals. Up to 4 h or OFF	COOLING STAGE 3 DELAY Delay after stage 2 for cool has been active. Turns on 2nd stage of cooling when economizer is 1st stage and mechanical cooling is 2nd
	SD DMPR POS	CLO	CLO or OPN	Function NOT AVAILABLE with 2−speed mode
	DCVCAL ENA	MAN	MAN (manual)	Turns on the DCV automatic control of the dampers. Resets ventilation.
	MATTCAL	0.0°F (or C)	+/−2.5°F (+/−1.4°C)	SUPPLY AIR TEMPERATURE CALIBRATION Allows for the operator to adjust for an out of calibration supply air temperature (SAT) sensor
	OA T CAL	1.0°F (or C)	+/−2.5°F (+/−1.4°C)	OUTSIDE AIR TEMPERATURE CALIBRATION Allows for the operator to adjust for an out of calibration outside air temperature (OAT) sensor
	OA H CAL	0% RH	+/−10% RH	OURTSIDE AIR HUMIDITY CALIBRATION Allows for the operator to adjust for an out of outside air enthalpy sensor
	RA T CAL	2.0°F (or C)	+/−2.5°F (+/−1.4°C)	RETURN AIR TEMPERATURE CALIBRATION Allows for the operator to adjust for an out of calibration return air temperature (RA) sensor
	RA H CAL	0% RH	+/−10% RH	RETURN AIR HUMIDITY CALIBRATION Allows for the operator to adjust for an out of calibration return air enthalpy sensor
	DA T CAL	0.0°F (or C)	+/−2.5°F (+/−1.4°C)	DISCHARGE AIR TEMPERATURE CALIBRATION Allows for the operator to adjust for an out of calibration discharge air temperature (DAT) sensor
	2SP FAN DELAY	5 Minutes	0 to 20 minutes in 1 minute increments	TIME DELAY ON 2nd STAGE ECONOMIZING While in the Economizing mode, this is the delay between thermostat Y2 call and Y1−O output to mechanical cooling stage, to allow high speed fan operation to attempt to cool space first.

Table 9 - Menu Structure[a] (cont)

Menu	Parameter	Parameter Default Value	Parameter Range and Increment[b]	EXPANDED PARAMETER NAME Notes
CHECKOUT	DAMPER VMIN .HS	n/a	n/a	Positions OA damper to VMIN High Speed position
	DAMPER VMAX .HS	n/a	n/a	Positions OA damper to VMAX High Speed position
	DAMPER OPEN	n/a	n/a	Positions OA damper to the full open position.
	DAMPER CLOSE	n/a	n/a	Positions damper to the fully closed position
	CONNECT Y1–O	n/a	n/a	Closes the Y1–O relay (Y1–O)
	CONNECT Y2–O	n/a	n/a	Closes the Y2–O relay (Y2–O)
	CONNECT AUX1O	n/a	n/a	Energizes the AUX1O output. If Aux setting is: • NONE – not action taken • ERV – 24 Vac out. Turns on or signals an ERV that the conditions are not good for economizing but are good for ERV operation.[d] • SYS – 24 Vac out. Issues a system alarm
ALARMS(_)				Alarms display only when they are active. The menu title "ALARMS(_)" includes the number of active alarms in parenthesis ( ).
	MA T SENS ERR	n/a	n/a	SUPPLY AIR TEMPERATURE SENSOR ERROR
	CO2 SENS ERR	n/a	n/a	CO2 SENSOR ERROR
	OA T SENS ERR	n/a	n/a	OUTSIDE AIR TEMPERATURE SENSOR ERROR OAT sensor connected at input terminals OAT
	OA SYLK SENS ERR	n/a	n/a	OUTSIDE AIR TEMPERATURE SENSOR ERROR OAT sensor connected on S– bus
	DA T SENS ERR	n/a	n/a	DISCHARGE AIR TEMPERATURE SENSOR ERROR
	SYS ALARM	n/a	n/a	When AUX is set to SYS and there is any alarm (e.g., failed sensors, etc.), the AUX terminal has 24 Vac out.
	ACT UNDER V	n/a	n/a	ACTUATOR VOLTAGE LOW Voltage received at actuator is below expected range
	ACT OVER V	n/a	n/a	ACTUATOR VOLTAGE HIGH Voltage received at actuator is above expected range
	ACT STALLED	n/a	n/a	ACTUATOR STALLED Actuator stopped before reaching commanded position

[a] Table 9 illustrates the complete hierarchy. your menu parameters may be different depending on your configuration. For example if you do not have a DCV (CO_2) sensor, then none of the DCV parameters appear.

[b] When values are displayed, pressing and holding the ▲ or ▼ button causes the display to automatically increment.

[c] n/a = not applicable

[d] ERV Operation: When in Cooling mode AND the conditions are NOT OK for economizing – the ERV terminal will be energized. In the Heating mode the ERV terminal will be energized when the OA is below the ERV OAT setpoint in the setpoint menu.

Menu Notes

1 ***STATUS –> OCCUPIED –*** The factory-standard Occupancy signal originates with a thermostat or other controller call for indoor fan operation at ISC terminal G. This signal passes through the Integrated Staging Control Board's OCCUPIED jumper JMP1 to the ECONO connector and to the W7220's OCC input terminal. An external timeclock or relay is required to implement an Occupancy schedule on the economizer damper position.

2 ***STATUS -> MA TEMP, SETPOINTS -> MAT SET –*** The W7220 menu parameters and labels include designations MA , MAT and Mixed Air for the economizer cooling control sensor. On these rooftop units, the economizer control sensor is located downstream of the evaporator/indoor coil in the supply fan section where this sensor is designated as Supply Air Temperature (SAT) sensor.

3 ***SETPOINTS -> DRYBLB SET –*** This point is not displayed if a Return Air (differential) temperature sensor or an Outdoor Air enthalpy sensor is connected.

4 ***SYSTEM SETUP*** parameters must be configured as noted for 2-Speed unit operation:
EQUIPMENT = CONV
AUX2 I = W
FAN TYPE = 2SPEED

Connections and Applications

W7220 Economizer Module Wiring —

Use Fig. 54 and Tables 10 and 11 to locate the wiring terminals for the Economizer module.

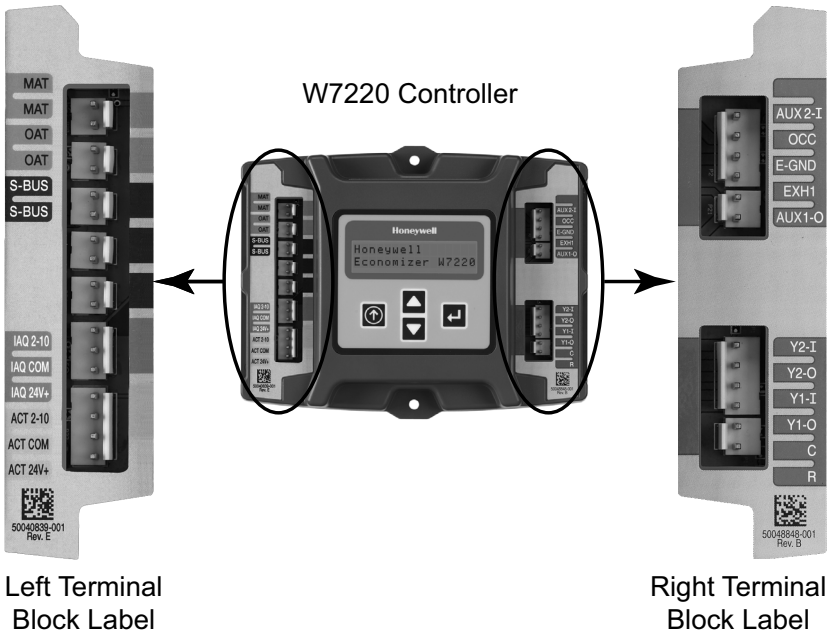

C12014

Fig. 54 - W7220 Economizer Module Terminal Connection Labels

Table 10 – Economizer Module - Left Hand Terminal Blocks

Label	Type	Description
Top Left Terminal Block		
MAT MAT	20k NTC and COM	Supply Air Temperature Sensor (polarity insensitive connection)
OAT OAT	20k NTC and COM	Outdoor Air Temperature Sensor (polarity insensitive connection)
S–BUS S–BUS	S–Bus (Sylk Bus)	Enthalpy Control Sensor (polarity insensitive connection)
Bottom Left Terminal Block		
IAQ 2–10	2–10 Vdc	Air Quality Sensor Input (e.g. CO_2 sensor)
IAQ COM	COM	Air Quality Sensor Common
IAQ 24V	24 Vac	Air Quality Sensor 24 Vac Source
ACT 2–10	2–10 Vdc	Damper Actuator Output (2–10 Vdc)
ACT COM	COM	Damper Actuator Output Common
ACT 24V	24 Vac	Damper Actuator 24 Vac Source

Table 11 – Economizer Module - Right Hand Terminal Blocks

Label	Type	Description
Top Right Terminal Block		
	n/a	The first terminal is not used
AUX2 I	24 Vac IN	Input from Thermostat W1 indicating base unit is in Heat mode, damper controls to High Fan Speed setpoints
OCC	24 Vac IN	Occupied / Unoccupied Input
E–GND	E–GND	Earth Ground – System Required
EXH1	24 Vac OUT	Exhaust Fan 1 Output
AUX1 O	24 Vac OUT	Programmable: Exhaust fan 2 output or Erv or System Alarm output
Bottom Right Terminal Block		
Y2–I	24 Vac IN	Y2 in – Cooling Stage 2 Input from space thermostat
Y2–O	24 Vac OUT	Y2 out – Cooling Stage 2 Output to stage 2 mechanical cooling
Y1–I	24 Vac IN	Y1 in – Cooling Stage 2 Input from space thermostat
Y1–O	24 Vac OUT	Y1 out – Cooling Stage 2 Output to stage 2 mechanical cooling
C	COM	24 Vac Common
R	24 Vac	24 Vac Power (Hot)

Refer to Figs 55 and 56 for sensor and controls connections.

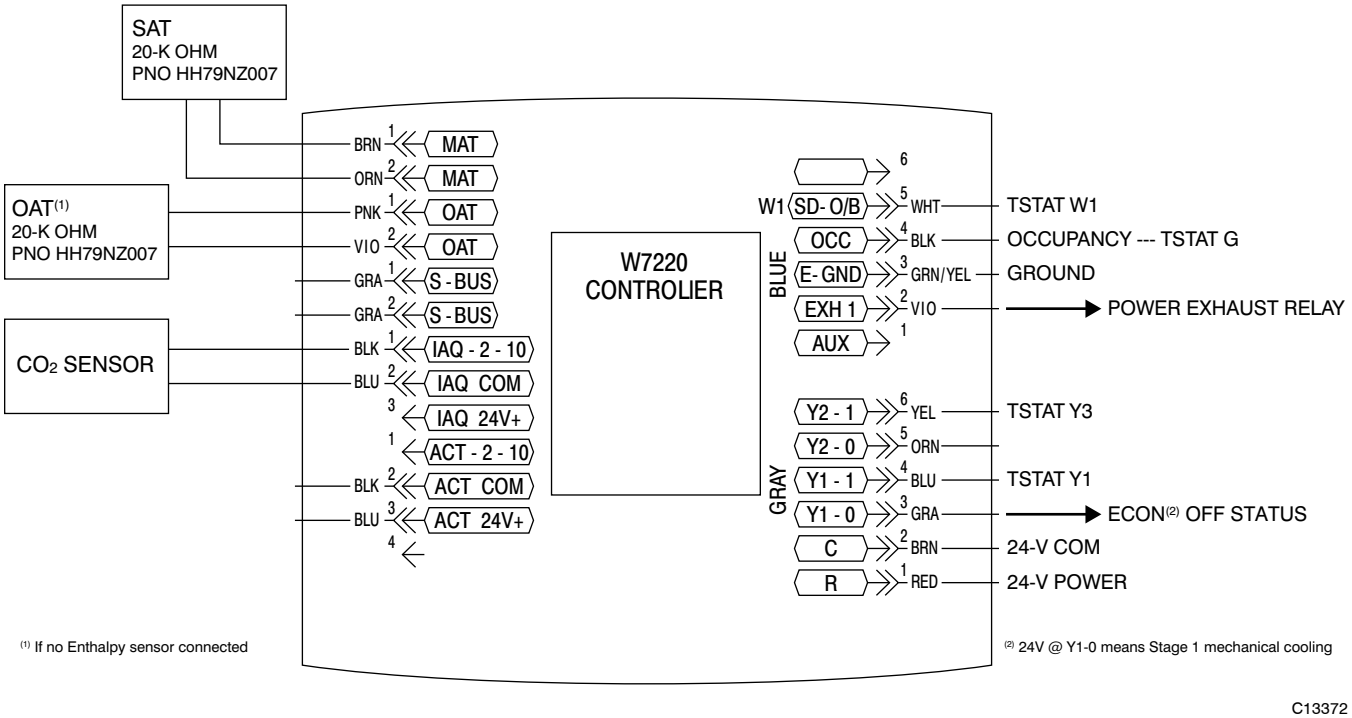

Fig. 55 - W7220 Sensor and Control I/O Connections

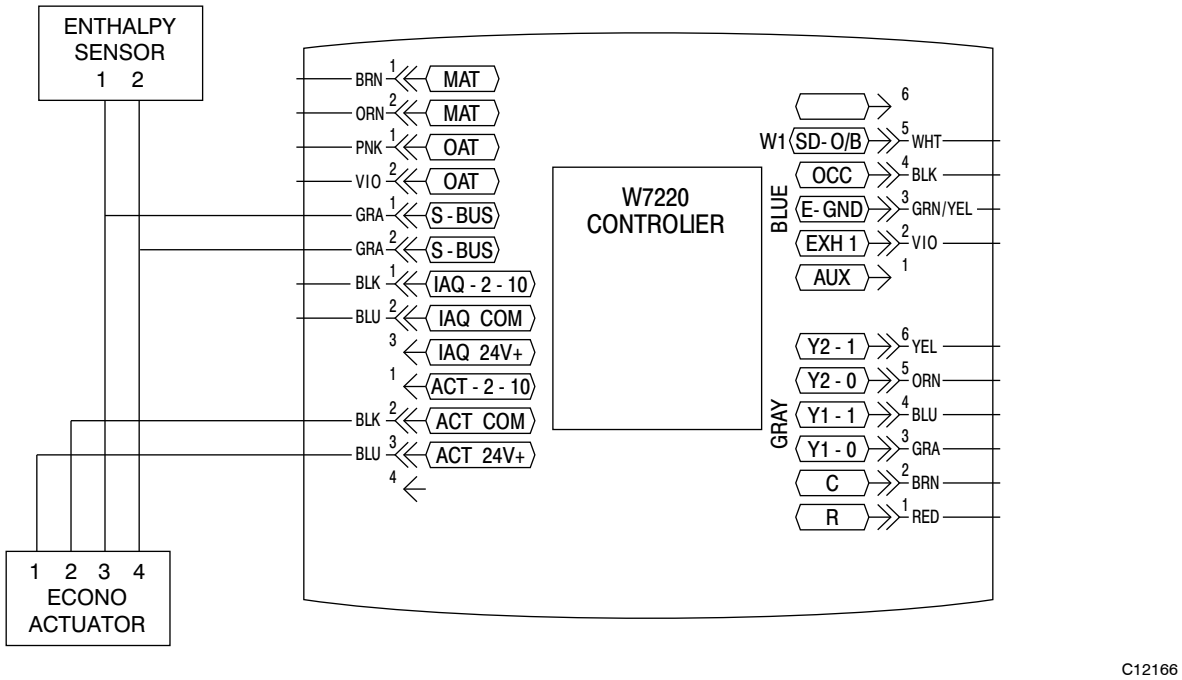

Fig. 56 - Actuator/S-BUS

Economizer Control Configurations

Enthalpy Changeover Control —

Economizer changeover based on outdoor air enthalpy requires an outdoor air enthalpy sensor to replace the OAT sensor. The enthalpy sensor is available as a factory-installed option or as a field-installed accessory (part number HH57AC081). See Fig. NO TAG for model number nomenclature; check Position #15 for codes N or R indicating a factory-installed enthalpy sensor. Use Fig. 57 and Table 12 to select the enthalpy changeover setting to enter in menu item SETPOINTS -> ENTH CURVE.

Enthalpy Settings —

When the OA temperature, enthalpy and dew point are below the respective setpoints, the Outdoor Air can be used for economizing. Fig. 57 shows the new single enthalpy boundaries in the W7220. There are 5 boundaries (setpoints ES1 through ES5), which are defined by dry bulb temperature, enthalpy and dew point.

Refer to Table 12 for ENTH CURVE setpoint values.

The W7220 calculates the enthalpy and dew point using the OA temperature and humidity input from the OA enthalpy sensor. When the OA temperature, OA humidity and OA dew point are all below the selected boundary, the economizer sets the economizing mode to YES, economizing is available.

When all of the OA conditions are above the selected boundary, the conditions are not good to economize and the mode is set to NO.

Fig. 57 shows the 5 current boundaries. There is also a high limit boundary for differential enthalpy. The high limit boundary is ES1 when there are no stages of mechanical cooling energized and HL (high limit) when a compressor stage is energized.

Table 12 provides the values for each boundary limit.

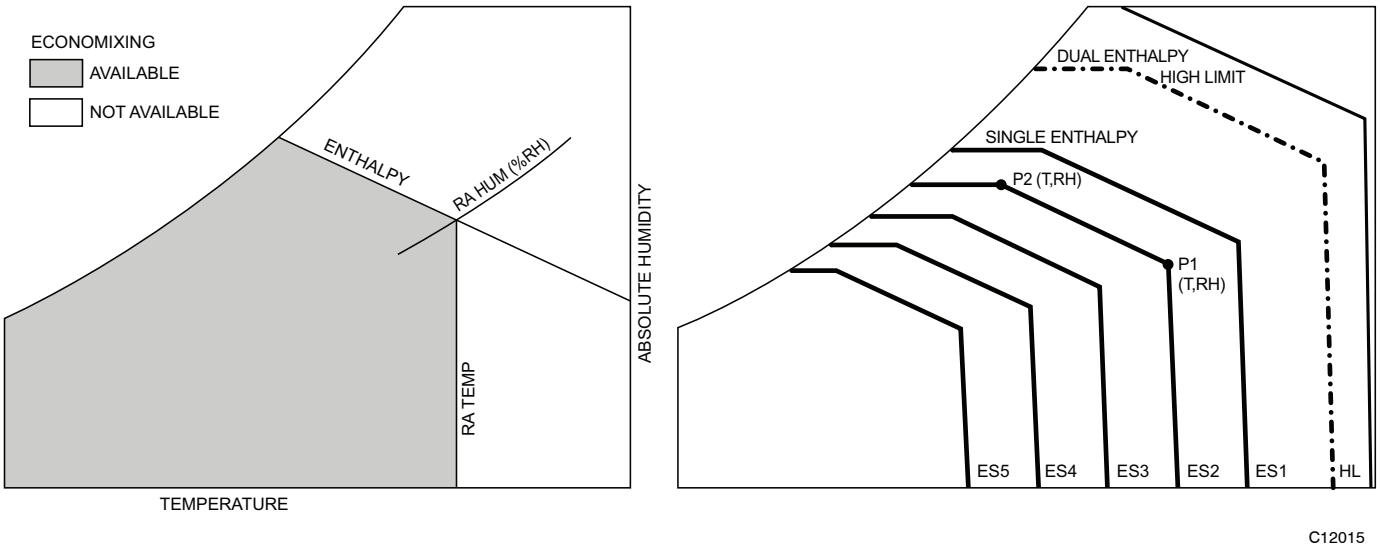

Fig. 57 - Single Enthalpy Curve and Boundaries

Table 12 – Single Enthalpy and Dual Enthalpy High Limit Curves (EN Units)

Enthalpy Curve	Temp. Dry–Bulb (°F)	Temp. Dewpoint (°F)	Enthalpy (btu/lb/da)	Point P1		Point P2	
				Temp. (°F)	Humidity %RH	Temp. (°F)	Humidity %RH
ES1	80.0	60.0	28.0	80.0	36.8	66.3	80.1
ES2	75.0	57.0	26.0	75.0	39.6	63.3	80.0
ES3	70.0	54.0	24.0	70.0	42.3	59.7	81.4
ES4	65.0	51.0	22.0	65.0	44.8	55.7	84.2
ES5	60.0	48.0	20.0	60.0	46.9	51.3	88.5
HL	86.0	66.0	32.4	86.0	38.9	72.4	80.3

Demand Control Ventilation —

Demand Control Ventilation (DCV) function requires a space air CO_2 sensor be connected to the W7220 controller. The CO_2 sensor provides a 2 to 10 vdc signal proportional to the space CO_2 level. This sensor is available as a factory-installed option (located in the unit's return air plenum) or as a field-installed accessory. See Fig. NO TAG for model number nomenclature; check Position #9 for codes E, F, G or H indicating a factory-installed CO_2 sensor. The W7220 automatically recognizes the connection of this sensor and self-enables the DCV function after the Configuration period.

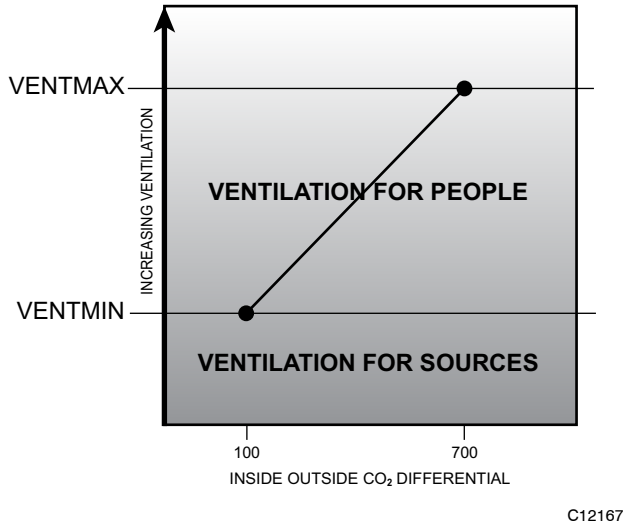

Fig. 58 - DCV Single-Speed System Setpoints

DCV With Single-Speed Fan System: During DCV, the outside air damper modulates between two user configurations depending upon the signal level of the space or return air CO_2 sensor representing the space occupancy level. The lower of these two positions is referred to as the Minimum IAQ Damper Position (designated VENTMIN) while the higher is referred to as Economizer Minimum Position (designated MINIMUM POSITION or VENTMAX). The VENTMIN position should be set to an economizer position that brings in enough fresh air to remove contaminants and CO_2 generated by sources other than people; this airflow rate is designated Va. The VENTMAX should be set to an economizer position that brings in enough fresh air to remove contaminants and CO_2 generated by all sources including people at the design condition for maximum space occupancy; this airflow rate is designated Vbz.

DCV With Two-Speed Fan System: Ventilation codes require that the same ventilation rates (Vbz and Va, expressed as CFM) be provided regardless of supply fan speed. When the supply fan speed is reduced, the internal static pressure in the unit's return plenum also decreases. If the same outside air damper position is retained, the airflow rate through the OA damper decreases below the Va and Vbz levels. To restore ventilation rates to design levels, the damper positions VENTMIN and VENTMAX must be automatically adjusted when the fan speed changes. The W7220 provides this function when it is configured for 2-speed fan operation through a second set of damper position setpoints.

During operation at High fan speed, the damper setpoint limits are designated VENTMIN H and VENTMAX H. Damper operation is same as described under Single-Speed Fan above.

During operation at Low fan speed, the damper setpoint limits change to VENTMIN L and VENTMIN L. These settings are higher than the comparable High speed settings and cause the outside air damper to open more to allow the same Va and Vbz airflow rates to be admitted to the space.

Adjust the DCV setpoints VENTMAX H and VENTMAX L with supply fan speed in High speed and Low speed respectively to provide the design load ventilation airflow rate Vbz by measuring outside air temperature, return air temperature and supply air temperature. Make damper position adjustments with at least 10°F temperature difference between the outdoor and return-air temperatures.

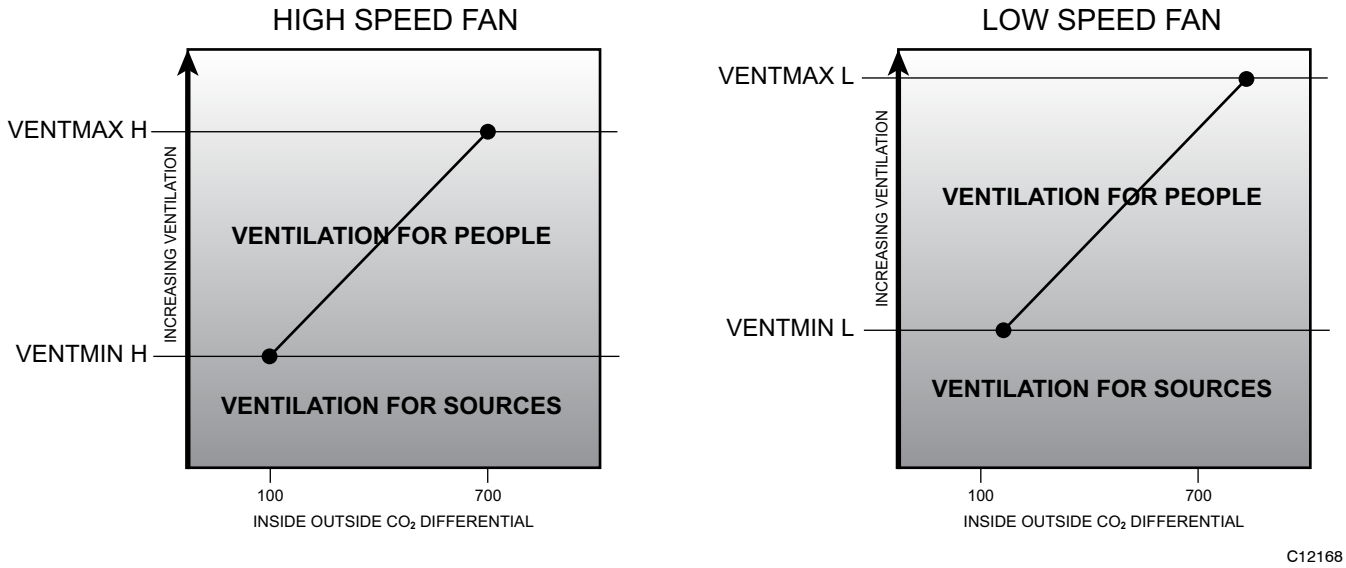

Fig. 59 - DCV 2-Speed System Setpoints — Same Ventilation CFM at Both Speeds

To determine the damper setpoint position, perform the following procedure for each condition setpoint, with mechanical cooling OFF:

Calculate the appropriate supply air temperature using the following formula:

TS = (TO x Vbz/CFM) + TR x (CFM – Vbz)/CFM

TS = Supply Air Temperature
TO = Outdoor Air Temperature
Vbz = Design Maximum Ventilation CFMr
CFM= Unit Supply Airflow Rate
TR = Return Air Temperature

As an example:

Unit Airflow Rate at High Speed is 4000 CFM
Ventilation CFM at design occupancy Vbz is 1200 CFM
TO = 60 F
TR = 75 F

Required TS = 60 x (1200/4000) + 75 x (4000 – 1200/4000)
= 60 x 0.30 + 75 x 0.70 = 18.0 + 52.5
= 70.5

At the W7220 keypad, enter the parameter SETUP -> VENTMAX H and adjust the setpoint value until the observed Supply Air Temperature (MA TEMP) reaches 70.5. Press the ↵ "Enter" key to save this setpoint to controller memory.

When determining VENTMIN setpoints, substitute the value for Va in place of Vbz in the formula.

DCV Setpoint: The SETPOINTS parameter DCV SET defines the space CO_2 level above which the DCV mode begins to open the outside air damper beyond its VENTMIN ventilation lower limit. This setpoint should be a minimum of 100 ppm greater than the outdoor ambient CO_2 level to ensure the outside air will be capable of diluting the space CO2 level. A typical value for outdoor CO_2 is 400 ppm; adjust the setpoint DCV SET to 500 ppm if outdoor CO_2 level is not known. The factory default value for DCV SET is 1100 ppm.

Economizer Occupancy Control —

The 24-v signal that terminates at the W7220's OCC input to place the economizer control in Occupied mode when the supply fan starts is routed through the rooftop unit's Integrated Staging Control Board at its OCCUPANCY jumper. To implement an occupancy control for the economizer operation, connect a contact set at ISC OCCUPANCY quick-connect terminals and cut jumper JMP1. To allow automatic occupancy mode, close the control contacts. To place the economizer in Unoccupied mode, open the control contacts.

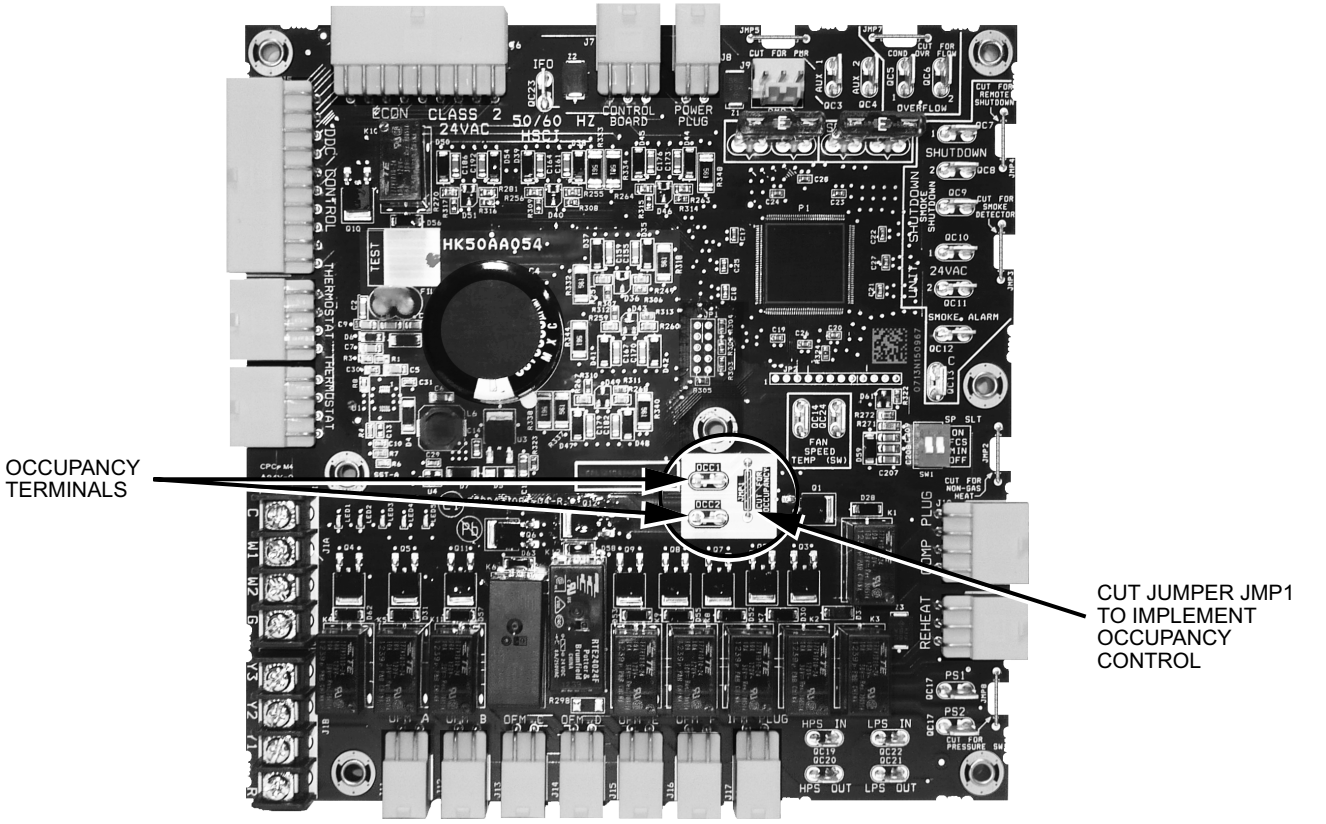

Fig. 60 - Integrated Staging Control Board (ISC) - Occupancy Terminals and Jumper

Hardware

Actuators —

The Economizer X damper actuators are direct-coupled types with spring-return. Power is 24-v from the W7220 outputs. Range of rotation is 95-degrees; timing for full-range movement is 90 seconds to drive open in normal operation, 30 seconds in Test Mode and 25 seconds for spring return.

These actuators are S-bus enabled. The S-bus is a proprietary local equipment network that connects the W7220 controller, one S-enabled actuator and up to three S-type enthalpy sensors on a two-wire communication network. The S-bus is polarity-insensitive. Devices attached to the S- bus are automatically recognized by the controller.

Actuator command position is defined in a 2-10 vdc value. 2.0-v is outside air damper position fully-closed (0% open); 10.0-v is damper position fully-open (100% open). See Table 13 to correlate control voltage values to outside air damper opening percentage.

Table 13 – Actuator Voltage vs. Damper Position

Vdc	% Open	Vdc	% Open	Vdc	% Open
2.0	0	4.8	35	7.6	70
2.4	5	5.2	40	8.0	75
2.8	10	5.6	45	8.4	80
3.2	15	6.0	50	8.8	85
3.6	20	6.4	55	9.2	90
4.0	25	6.8	60	9.6	95
4.4	30	7.2	65	10.0	100

These units use a 3-Nm (27 lb-in) torque model, Honeywell Series MS3103K actuator.

Supply Air Temperature Sensor —

The W7220 controller uses a 20-k ohm analog sensor for Supply Air Temperature (SAT). The thermistor is attached to a ring terminal. The ring terminal is attached to the unit's supply fan housing, downstream of the unit's indoor coil. The SAT sensor is connected to the W7220 input terminals marked MAT. See Table 14 for sensor resistance to temperature correlations.

The W7220 controller requires a valid signal from its SAT channel in order to function. If the SAT connection to the W7220 is lost, the W7220 will initiate an alarm condition immediately. No economizing operation will be permitted until this alarm is cleared.

Table 14 – SAT/OAT Sensor Characteristics

Deg C	Ohms
–30	415156
–25	301540
–20	221210
–15	163834
–10	122453
–5	92382
0	70200
5	53806
10	41561
15	32341
20	25346
25	20000
30	15886
35	12698
40	10212
45	8261
50	6720

Deg F	Ohms
–20	386130
0	193070
20	101820
32	70200
40	55420
45	47771
50	41258
55	35725
60	31035
65	27069
70	23719
77	20000
80	18473
100	11544
120	6768

Outside Air Temperature Sensor —

Economizer X systems equipped with outdoor dry bulb temperature changeover control include a 20-k ohm analog sensor to measure Outdoor Air Temperature (OAT). This is the same sensor used for the SAT function; see Table 14 for resistance vs temperature characteristics.

The OAT sensor is attached to the outside air damper frame. It is connected to the W7220's OAT input terminals.

If an accessory enthalpy sensor is added to an Economizer X system with factory dry bulb changeover, disconnect this OAT sensor wiring at the W7220's OAT input terminals.

Enthalpy Control Sensor Configuration—

The W7220 economizer control system can accommodate up to three S-bus enthalpy sensors. On Economizer X models with factory-installed Enthalpy Changeover control, one S-bus sensor is provided in the economizer outdoor section. Additional sensors may be added to measure Return Air and Discharge Air conditions.

The Enthalpy Control sensor (Part Number: HH57AC081) communicates with the W7220 Economizer controller on the two-wire local equipment network bus (S-bus) and can either be wired using a two pin header or using a side connector. This sensor is used for all OAT (Outdoor Air Temperature), RAT (Return Air Temperature) and DAT (Discharge Air Temperature), depending on how its three position DIP switch is set.

Use Fig. 61 and Table 15 to locate the wiring terminals for each Enthalpy Control sensor.

Use Fig. 61 and Table 16 to set the DIP switches for the desired use (location) of the sensor.

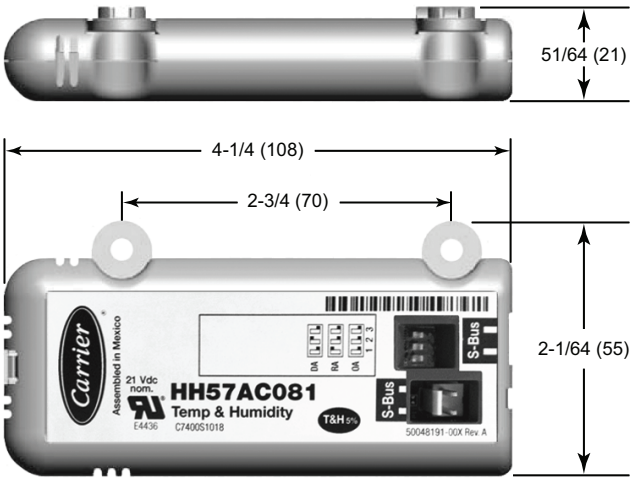

NOTE: Dimensions in ( ) are in mm

C12036

Fig. 61 - Enthalpy Control Sensor, Dimensions and DIP Switch Location

Table 15 – Enthalpy Control Sensor Wiring Terminations[a]

Terminal		Type	Description
Nbr	Label		
1	S–BUS	S–BUS	S–Bus Communications (Enthalpy Control Sensor Bus)
2	S–BUS	S–BUS	S–Bus Communications (Enthalpy Control Sensor Bus)

a Terminals are polarity insensitive.

Table 16 – Enthalpy Control Sensor DIP Switch Settings

Use	DIP Switch Positions for Switches 1, 2, & 3		
	1	2	3
DA[a]	OFF	ON	OFF
RA[b]	ON	OFF	OFF
OA[c]	OFF	OFF	OFF

a DA = Discharge Air
b RA = Return Air
c OA = Outside Air

When a S-bus sensor is connected to an existing network, it will take 60 minutes for the network to recognize and auto-configure itself to use the new sensor. During the 60 minute setup period, no alarms for sensor failures (except SAT) will be issued and no economizing function will be available.

Operating Sequences

Staged Air Volume (3-Speed) Fan Motor —

The Integrated Staging Control (ISC) Board in the main unit determines the operating speed (LOW/MED/HIGH) of the indoor fan based on space thermostat demand conditions. See Table 17 for this logic.

Table 17 – Supply Fan Speed Logic without Economizer

TSTAT OUTPUT				
G/OCC	0–V	**24–V**	0–V	0–V
Y1	0–V	**24–V**	0–V	0–V
Y2	0–V	0–V	**24–V**	0–V
Y3	0–V	0–V	0–V	**24–V**
W1	0–V	0–V	0–V	**24–V**
W2	0–V	0–V	0–V	**24–V**
SUPPLY FAN MOTOR SPEED	OFF	LOW	MED	HIGH

W7220 Economizer Control —

Tables 18 and 19 provide the W7220 Input/Output Logic. Table 18 describes economizer functions for a unit without a CO_2 sensor. Table 19 describes economizer functions for a unit with Demand Control Ventilation (CO_2 sensor connected). The supply fan speed is included in these tables for reference; this is neither an input or output of the W7220 controller.

Base Unit Controls —

Base unit includes standard electromechanical controls, Staged Air Volume (3-speed supply fan motor with VFD), EconoMi$er X (with W7220 controller) and thermostat or unitary controller that energizes the G terminal in cooling and heating to control the supply fan operation.

Cooling, Unit With EconoMi$er X Without CO_2 —

For Occupied mode operation of EconoMi$er X, there must be a 24-v signal at terminal G at the unit's Integrated Staging Control Board from the thermostat; supply fan motor will start and run in Low Speed. The signal at G is connected to W7220 input OCC, placing the EconoMi$er X control in Occupied mode; the economizer actuator is commanded open to the MIN POS L ventilation position. Removing the signal at OCC places the EconoMi$er X control in Unoccupied mode; the economizer actuator is driven back to full-closed position.

When free cooling using outside air is not available, the unit cooling sequence will be controlled directly by the space thermostat. Thermostat call for Stage 1 Cooling energizes ISC terminals G and Y1; supply fan motor starts and runs in Low Speed. The Y1 demand is received at W7220 terminal Y1-I. Outside air damper position will be at MIN POS L. W7220 output Y1-O is energized; first stage mechanical cooling starts.

As space temperature falls and space cooling load is satisfied, the thermostat will remove its call for first stage cooling; ISC terminal Y1 call is removed. The W7220 input Y1-I is removed; output Y1-O is de-energized, stopping first stage cooling.

When ISC terminal Y1 is de-energized, terminal G may remain energized, indicating Continuous Fan operation. The supply fan motor will continue to run in Low Speed.

W7220 input OCC remains energized; the outside air damper remains in MIN POS L. If ISC terminal G is also de-energized with Y1, indicating AUTO Fan operation, then the supply fan motor will stop. The W7220 input at OCC is removed; the outside air damper closes.

If the space temperature continues to rise, the thermostat will call for second stage cooling; ISC terminal Y2 is also energized. The supply fan motor shifts to MED Speed. Outside air damper position will remain in MIN POS L, second stage cooling starts.

As space temperature falls, the thermostat will remove its call for second stage cooling; ISC terminal Y2 call is removed. The supply fan motor shifts back to Low Speed. The outside air damper remains at MIN POS L and the ISC board will stop second stage mechanical cooling.

If the space temperature continues to rise, the thermostat will call for third stage cooling; ISC terminal Y-3 is also energized. The supply fan motor shifts to High Speed. The outside air damper position will shift to MIN POS H, third stage cooling starts.

As space temperature falls, the thermostat will remove its call for third stage cooling; ISC terminal Y3 call is removed. The supply fan will shift to Medium Speed. The outside air damper position is repositioned to MIN POS L and stop third stage mechanical cooling.

When free cooling is available as determined by the appropriate changeover command (outdoor dry bulb, outdoor enthalpy, differential dry bulb or differential enthalpy), a space thermostat call for Stage 1 Cooling energizes ISC terminals G and Y1; supply fan motor starts and runs in High Speed. The G demand is received at W7220 input OCC; outside air damper moves to MIN POS L. The Y1 demand is received at W7220 terminal Y1-I. The W7220 economizer control will modulate the outside air damper open and closed to maintain the unit cooling supply air temperature at setpoint MAT SET (default 53°F (12°C)). Compressor will not run.

During free cooling operation, a supply air temperature (SAT) above MAT SET will cause the outside air damper to modulate between MIN POS L setpoint and 100% open. As SAT decreases and approaches setpoint MA LO SET (default 45°F (7°C)), the outside air damper will maintain at the MIN POS L setting. With SAT below MA LO SET, the outside air damper will be closed or at minimum (see FREEZE POS) When SAT rises to MA LO SET plus 3°F, the outside air damper will re-open to MIN POS L setting.

Should 100% outside air not be capable of satisfying the space cooling load, space temperature will rise and the thermostat will call for second stage cooling; ISC terminal Y2 is also energized. The supply fan motor remains at High Speed. Outside air damper position will remain at MIN POS L, starting second stage cooling (Compressor 1 operation). Damper will modulate to maintain SAT at MAT SET concurrent with Compressor 1 operation.

Table 18 – W7220 Input/Output without CO_2 Sensor

INPUTS				Ref:	OUTPUTS			
DEMAND CONTROL VENTILATION	OUTSIDE AIR Good to economize?	Y1–I	Y2–I	FAN SPD (a)	Mechanical Cooling Stage		Occupancy	
							OCC Yes	OCC No
					Y1–O/1ST	Y2–O/2ND	Outside Air Damper Position	
NO CO_2 SENSOR	No	Off	Off	Low	0–v/Off	0–v/Off	MIN POS L	Closed
		On	Off	Low	24–v/On	0–v/Off	MIN POS L	Closed
		On	On	High	24–v/On	24–v/On	MIN POS H	Closed
	Yes	Off	Off	Low	0–v/Off	0–v/Off	MIN POS L	Closed
		On	Off	Low	0–v/Off	0–v/Off	Modulating: MIN POS L to Full–Open	Modulating: Closed to Full–Open
		On	On	High	2SP DELAY (b); 24v/On	0–v/Off (c)	Modulating: MIN POS H to Full–Open	Modulating: Closed to Full–Open

(a) Fan Speed for reference only; tins is not an input or output function of the W7220
(b) See Menu ADV SETUP –> 2SP FAN DELAY for details
(c) See Menu ADV SETUP –> STG# DLY. With Stage 3 delay enabled, control can turn on 2nd stage of cooling Y2–O after delay if the call for Y2–I has not been satisfied.

Table 19 – W7220 Input'/Output with Demand Control Ventilation (DCV)

INPUTS				Ref:	OUTPUTS			
DEMAND CONTROL VENTILATION	OUTSIDE AIR Good to economize?	Y1–I	Y2–I	FAN SPD (a)	Mechanical Cooling Stage		Occupancy	
							OCC Yes	OCC No
					Y1–O/1ST	Y2–O/2ND	Outside Air Damper Position	
Below set	No	Off	Off	Low	0–v/Off	0–v/Off	VENTMIN L	Closed
		On	Off	Low	24–v/On	0–v/Off	VENTMIN L	Closed
		On	On	High	24–v/On	24–v/On	VENTMIN H	Closed
	Yes	Off	Off	Low	0–v/Off	0–v/Off	VENTMIN L	Closed
		On	Off	Low	0–v/Off	0–v/Off	Modulating: VENTMIN L to Full–Open	Modulating: Closed to Full–Open
		On	On	High	2SP DELAY (b); 24v/On	0–v/Off (c)	Modulating: VENTMIN H to Full–Open	Modulating: Closed to Full–Open
Above set	No	Off	Off	Low	0–v/Off	0–v/Off	Modulating: VENTMIN L to VENTMAX L	Closed
		On	Off	Low	24–v/On	0–v/Off	Modulating: VENTMIN L to VENTMAX L	Closed
		On	On	High	24–v/On	24–v/On	Modulating: VENTMIN H to VENTMAX H	Closed
	Yes	Off	Off	Low	0–v/Off	0–v/Off	Modulating: VENTMIN L to VENTMAX L	Closed
		On	Off	Low	0–v/Off	0–v/Off	Modulating: VENTMIN L to Full–Open	Modulating: Closed to Full–Open
		On	On	High	2SP DELAY (b); 24v/On	0–v/Off (c)	Modulating: VENTMIN H to Full–Open	Modulating: Closed to Full–Open

(a) Fan Speed for reference only; tins is not an input or output function of the W7220
(b) See Menu ADV SETUP –> 2SP FAN DELAY for details
(c) See Menu ADV SETUP –> STG# DLY. With Stage 3 delay enabled, control can turn on 2nd stage of cooling Y2–O after delay if the call for Y2–I has not been satisfied.

As space temperature falls, the thermostat will remove its call for second stage cooling; ISC terminal Y2 call is removed. The supply fan motor remains High Speed. The outside air damper limit is repositioned to between MIN POS L and 100% open. Second stage cooling (Compressor 1 operation) stops. As space temperature continues to fall and space cooling load is satisfied, the thermostat will remove its call for first stage cooling; ISC terminal Y1 call is removed. The W7220 input Y1-I is removed; free cooling mode ends. Outside air damper will remain at MIN POS L if supply fan remains in operation (CONT FAN) or to closed if supply fan stops (AUTO FAN).

Should 100% outside air and second stage cooling (Compressor 1 operation) not be capable of satisfying the space cooling load, space temperature will rise and the thermostat will call for third stage cooling: ISC terminal Y3 is also energized, starting third stage cooling (Compressor 2 operation). The supply fan motor will remain at High Speed. The Y3 demand is received at W7220 input Y2-I. The outdoor air damper position will modulate from MIN POS H to 100% Open to maintain SAT at MAT SET concurrent with Compressor 2 operation.

As space temperature falls, the thermostat will remove its call for third stage cooling; ISC terminal Y3 call is removed. The supply fan will remain at High Speed. The W7220 input Y2-I is also removed; the outside air damper is repositioned to modulate from MIN POS L to 100% Open, third stage cooling (Compressor 2 operation) stops.

Power Exhaust: If accessory power exhaust is installed, the power exhaust fan motors will be energized by the economizer control as the dampers open above the setpoint EXH1 SET L during Low Speed operation or EXH1 SET H during High Speed fan operation. The EXH1 output will be de-energized as the dampers close below the EXH1 setpoint value.

Damper movement from full closed to full open (or vice versa) will take approximately 1-$^1/_2$ minutes.

Heating With EconoMi$er X —

When the space temperature calls for heat (W1 closes), ISC terminal W1 is energized. The supply fan will start and run in High Speed. The W1 signal will connect toW7220 input AUX2I; the outside air damper will move to MIN POS H. Unit heating sequence will follow base unit control sequences.

Demand Control Ventilation —

If a space or return air CO_2 sensor is connected to the Economize X control, a Demand Control Ventilation strategy will operate automatically.

When the space CO_2 level is below setpoint DCV SET (default 1100 ppm), the minimum ventilation position for the outside air damper will be reset to lower settings suited for offsetting CO_2 loads from space sources not including people. The settings will vary according to supply fan speed. When the supply fan speed is Low, the DCV minimum ventilation point is VENTMIN L. When the supply fan speed is High, the DCV minimum ventilation point is VENTMAX H.

As the CO_2 level in the space increases above the setpoint DCV SET (default 1100 ppm), the DCV ventilation position of the outside air damper will be increased proportionally, until the Maximum Ventilation setting is reached. The settings will vary according to supply fan speed. When the supply fan speed is Low, the DCV maximum ventilation point is VENTMAX L. When the supply fan speed is High, the DCV maximum ventilation point is VENTMAX H.

DCV operation will float between its VENTMIN and VENTMAX settings, never exceeding the VENTMAX limit as the space CO_2 level varies according to changes in people occupancy levels.

During concurrent demand for DCV and free cooling, the outdoor-damper will follow the higher demand condition from the DCV mode or from the free-cooling mode.

Setup and Configuration

Before being placed into service, the W7220 Economizer module must be setup and configured for the installed system according to project control specifications.

Inspect all wiring connections at the Economizer module's terminals, and verify compliance with the installation wiring diagrams.

Initial Menu Display —

On initial start up, Honeywell displays on the first line and Economizer W7220 on the second line. After a brief pause, the revision of the software appears on the first line and the second line will be blank.

Time-out and Screensaver —

When no buttons have been pressed for 10 minutes, the LCD displays a screen saver, which cycles through the Status items. Each Status items displays in turn and cycles to the next item after 5 seconds.

IMPORTANT: During setup, the Economizer module is live at all times.

Setup and configuration involves stepping through three menus and enabling required functions and re-selecting setpoints to meet project requirements. The menus used are SYSTEM SETUP, ADV SETUP and SETPOINTS.

Obtain a copy of the project control specifications before starting setup and configuration process.

NOTE: W7220 will be in the "set up" mode for the first 60 minutes after powered. If a sensor for OA air or S-bus device (sensor, actuator) is disconnected during the set up mode, the W7220 will not alarm that failure. The SAT sensor is a system "critical" sensor, if the SAT sensor is removed during the set up mode, the W7220 will alarm. After 60 minutes the W7220 controller will change to operation mode and all components removed or failed will alarm in the operation mode.

For this application with the 2-speed supply fan option, note that parameters EQUIPMENT, AUX2I and FAN TYPE have required settings. Check that these parameters are set at these required settings:

EQUIPMENT must be CONV
AUX2I must be W
FAN SPEED must be 2SPEED

Press the ⓪ (EXIT) button to exit the SYSTEM SETUP menu and return to top level menu. Scroll down to ADV SETUP menu and press ↵ (ENTER) button to enter this menu. Scroll down through the list of parameters and adjust settings as required. Be sure that the message CHANGE STORED appears with every change in parameter setting.

Press the ⓪ (EXIT) button to exit the ADV SETUP menu and return to top level menu. Scroll down to SETPOINTS menu and press ↵ (ENTER) button to enter this menu. Scroll down through the list of parameters and adjust settings as required. Be sure that the message CHANGE STORED appears with every change in parameter setting.

SETPOINT Defaults: The default setpoint values represent many years of successful experience with economizing systems. Any changes that represent significant deviations from the default values should be well considered.

DCV SETPOINT: The default value for DCV SET is 1100 ppm. It is recommended that this setpoint be adjusted down to 500 ppm (or CO_2 level of outdoor air plus 100 ppm, whichever is higher) to permit an earlier initiation of the DCV mode as space occupancy increases.

Checkout

For checkout, review the Status of each configured parameter by observing the scrolling display from the Screensaver mode or by entering the STATUS menu.

Use the Checkout menu (see Table 9 on page 44) to test the damper operation and any configured outputs. Only items that are configured are shown in the Checkout menu.

To perform a Checkout test:

1. Scroll to the desired test in the Checkout menu using the the ▲ and ▼ buttons.
2. Press the ↵ button to select the item.
3. RUN? appears.
4. Press the ↵ button to start the test.
5. The unit pauses and then displays IN PROGRESS.
6. When the test is complete, DONE appears.
7. When all desired parameters have been tested, press the ⓪ (Menu up) button to end the test.

The Checkout tests can all be performed at the time of installation or at any time during the operation of the system as a test that the system is operable.

⚠ CAUTION

EQUIPMENT DAMAGE HAZARD

Failure to follow this caution may result in equipment damage.

Be sure to allow enough time for compressor startup and shutdown between checkout tests so that you do not short-cycle the compressors.

Status —

Use the STATUS menu (see pages 41 and NO TAG) to check the parameter values for the various devices and sensors configured.

Calibration of Sensors —

There are up to six sensor calibration settings available in the ADV SETUP menu (depending on which sensors are connected to the W7220). See page 43 for this menu.

Resetting All Defaults —

Menu SYSTEM SETUP contains parameter FACTORY DEFAULT. This parameter will reset all setpoints back to factory default values.

To reset all values to defaults, scroll to the SYSTEM SETUP menu, enter the menu and scroll to parameter FACTORY DEFAULT. Enter this parameter and change the display value from NO to YES. Press ENTER ↵.

After resetting all values, scroll up in SYSTEM SETUP to ensure the three parameters requiring special values for use with 2-speed fan system are correct.

Troubleshooting

Power Up Delay—

Upon power up (or after a power outage or brownout), the W7220 controller module begins a 5 minute power up delay before enabling mechanical cooling.

Power Loss (Outage or Brownout) —

All setpoints and advanced settings are restored after any power loss or interruption.

NOTE: If the power goes below 18 Vac, the W7220 controller module assumes a power loss and the 5 minute power up delay will become functional when power returns above 18 Vac.

Alarms —

The Economizer module provides alarm messages that display on the 2-line LCD.

NOTE: Upon power up, the module waits 60 minutes before checking for alarms. This allows time for all the configured devices (e.g. sensors, actuator) to become operational. The exception is the SAT sensor which will alarm immediately.

If one or more alarms are present and there has been no keypad activity for at least 5 minutes, the Alarms menu displays and cycles through the active alarms. You can also navigate to the Alarms menu at any time. The list of alarms included in Table 9 (see page 44) is not a complete list of available alarm messages. Each sensor has alarms for temperature, humidity and enthalpy. The list of possible alarms will vary from unit to unit as different sensors are connected.

Clearing Alarms —

Once the alarm has been identified and the cause has been removed (e.g. replaced faulty sensor). the alarm can be cleared from the display.

To clear an alarm, perform the following:

1. Navigate to the desired alarm.
2. Press the ↵ button.
3. ERASE? displays.
4. Press the ↵ button.
5. ALARM ERASED displays.
6. Press the ⓪ (Menu up/Exit) button to complete the action and return to the previous menu.

NOTE: If the alarm still exists after you clear it, it is redisplayed within 5 seconds.

Table 20 – Operating Issues and Concerns

Issue or Concern	Possible Cause and Remedy
My outdoor temperature reading on the STATUS menu is not accurate.	Check the sensor wiring: • Enthalpy sensors are to be wired to the S–Bus terminals. • Temperature sensors are to be wired to the OAT and MAT terminals.
If my enthalpy sensor drifts in accuracy over time, can I re–calibrate it?	The sensor are not able to be re–calibrated in the field. However there is a menu item under the ADVANCED menu where you are able to input a limited offset in temperature and humidity for each sensor you have connected to the economizer.
Can I go back to factory defaults and start over?	Under the SYSTEM SETUP menu you can change the setpoints to the factory defaults.
Will I be able to see the LCD screen when it is in the unit?	The LCD screen has a backlight that is always illuminated.
What is a good setpoint for the Supply Air Temperature (SAT)?	The supply air temperature is the temperature of air that you want to supply to the space. In a commercial building, this is between 50 to 55°F (10 to 13°C). The supply air is the mixing of the return air and the outdoor air.
I am using enthalpy sensors. Why did the control ask me to input a dry bulb changeover temperature?	In the event the humidity sensor in the enthalpy sensors fails, the backup algorithm in the control is to default to the temperature sensor in the enthalpy sensor.
In checkout, the outdoor damper closes when i command it to open.	Check the actuator linkage or rotation. In the CHECKOUT mode, the outdoor damper should drive open or closed with the return air damper having the opposite effect.
How do I set my minimum position?	The minimum position is set using the VENTMIN and VENTMAX setup in the SETPOINTS menu. VENTMIN is the minimum ventilation required when using an occupancy sensor and VENTMAX is the minimum ventilation when not using an occupancy sensor for Demand Control Ventilation. The VENTMAX position is set the same as with the potentiometer on the analog economizers and is the output voltage to the damper actuator. The range is 2 Vdc closed OA damper and 10 Vdc open OA damper.
What if my damper does not go completely closed in the checkout operation?	Check the damper linkage or hub to make sure the damper is able to close completely.
How do I set the OCC?	There are two setting for the OCC setting, INPUT and ALWAYS. INPUT is from the space thermostat, if it has an occupancy output. ALWAYS is the unit in the occupied mode, if the economizer is powered (fan on).
Does the economizer save my program values if the unit loses power?	Yes, once the changes are stored in the controller they will be stored until they are changed by the operator.
If the unit is left in checkout, how long will the unit stay in checkout mode without input?	The unit will remain in checkout for 10 minutes, then return to normal operation.

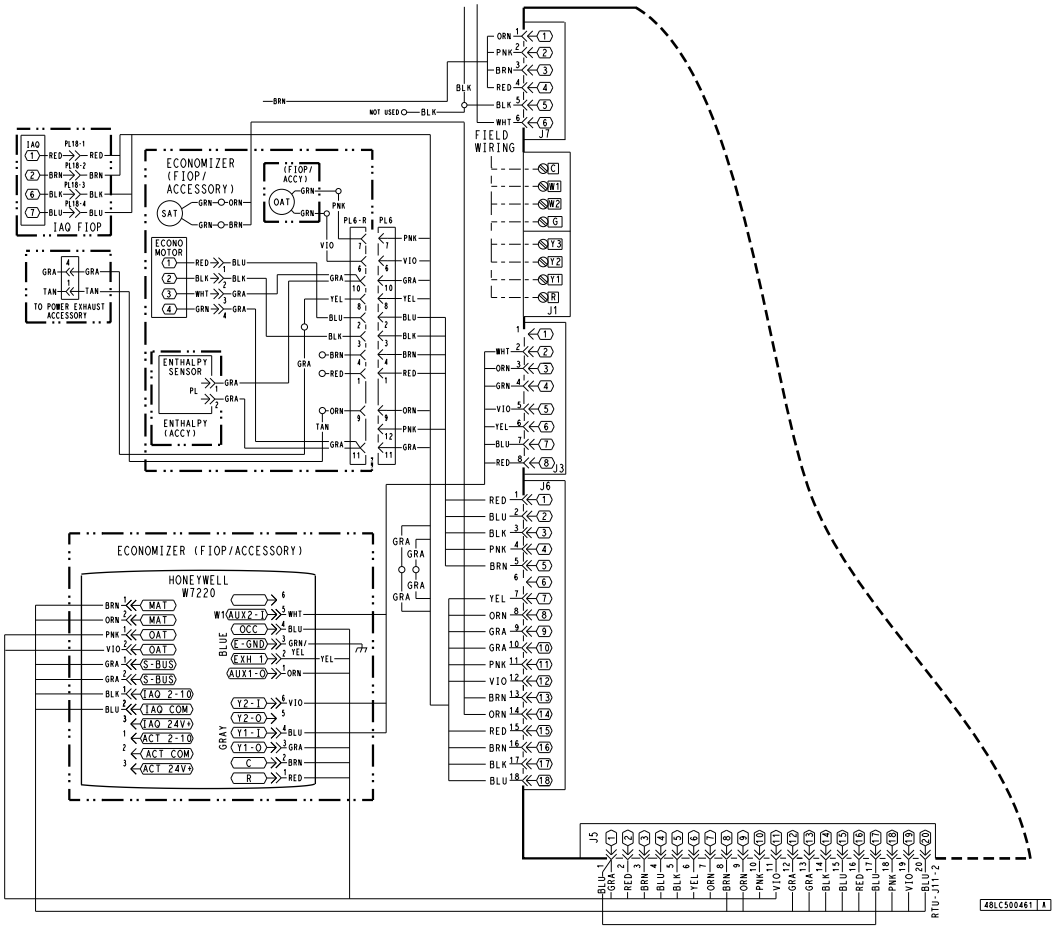

C13683

Fig. 62 - Typical EconoMi$er X Wiring Diagram

CONTROL SET POINT AND CONFIGURATION LOG

Project Name/Location: _____

Model Number: _____

Serial Number: _____

Date: _____

Technician _____

Menu Tables:

1. SYSTEM SETUP
2. ADVANCED SETUP
3. SETPOINTS

Menu 1: System Setup

Parameter	Project Value	Parameter Default Value	Parameter Range and Increment	Notes
INSTALL		01/01/10		Display order = MM/DD/YY Setting order = DD, MM, then YY
UNITS DEG		_F	_F or _C	Sets economizer controller in degrees Fahrenheit or Celsius.
EQUIPMENT		CONV	CONV required for 2−speed mode	CONV = conventional; HP O/B = Enable Heat Pump mode; not available with 2−speed See Menu Note 4 (on page 44)
AUX2 I		W	W required for 2−speed mode	W = Informs controller that system is in heating mode. SD = Enables configuration of shutdown (not available on 2−speed) See Menu Note 4 (on page 44)
FAN TYPE		2speed	2speed required	Sets the economizer controller for operation of 1 speed or 2 speed indoor fan system. See Menu Note 4 (on page 44)
FAN CFM		5000cfm	100 to 15000 cfm;	UNIT DESIGN AIRFLOW (CFM) Enter ONLY if using DCVCAL ENA = AUTO The value is found in the Project Submittal documents for the specific RTU.
AUX OUT		NONE	NONE ERV EXH2 SYS	Select OUTPUT for AUX1 O relay NONE = not configured (output is not used) ERV = Energy Recovery Ventilator EXH2 = second damper position relay closure for second exhaust fan SYS = use output as an alarm signal
OCC		INPUT	INPUT or ALWAYS	OCCUPIED MODE BY EXTERNAL SIGNAL When using a setback thermostat with occupancy out (24 Vac), the 24−Vac is input to the OCC terminal. RTU control circuit provides 24−Vac to OCC through OCCUPIED terminals on Integrated Staging Control Board. (see Menu Note 2 (on page 44)
FACTORY DEFAULT		NO	NO or YES	Resets all set points to factory defaults when set to YES. LCD will briefly flash YES and change to NO but all parameters will change to the factory default values. **RECHECK AUX2 I and FANTYPE for required 2−speed values.**

Menu 2: Advanced Setup

Parameter	Project Value	Parameter Default Value	Parameter Range and Increment	Notes
MA LO SET		45°F (7°C)	35 to 55°F; (2 to 13°C) incremented by 1°	SUPPLY AIR TEMPERATRUE LOW LIMIT Temperature to achieve Freeze Protection (close damper and alarm if temperature at SAT location falls below setup value)
FREEZE POS		CLO	CLO or MIN	FREEZE PROTECTION DAMPER POSITION Damper position when freeze protection is active CLO =closed MIN = MIN POS or VENTMAX
CO2 ZERO		0ppm	0 to 500 ppm: Increment by 10	CO_2 ppm level to match CO2 Sensor start level.
CO2 SPAN		2000ppm	1000 to 3000 ppm; Increment by 50	CO_2 ppm span to match CO2 sensor.
STG3 DLY		2.0h	0 min, 5 min, 15 min, then 15 min intervals. Up to 4 h or OFF	COOLING STAGE 3 DELAY Delay after stage 2 for cool has been active. Turns on 2nd stage of cooling when economizer is 1st stage and mechanical cooling is 2nd
SD DMPR POS		CLO	CLO or OPN	Function NOT AVAILABLE with 2−speed mode
DCVCAL ENA		MAN	MAN (manual)	Turns on the DCV automatic control of the dampers. Resets ventilation
MAT T CAL	0.0	1.0°F (or °C)	+/− 2.5°F (+/−1.4°C)	SUPPLY AIR TEMPERATURE CALIBRATION Allows for the operator to adjust for an out of calibration supply air temperature (SAT) sensor
OA T CAL	2.0	3.0°F (or °C)	+/− 2.5°F (+/−1.4°C)	OUTSIDE AIR TEMPERATURE CALIBRATION Allows for the operator to adjust for an out of calibration outside air temperature (OAT) sensor
OA H CAL		0% RH	+/− 10% RH	OUTSIDE AIR HUMIDITY CALIBRATION Allows for the operator to adjust for an out of calibration of outside air enthalpy sensor
RA T CAL	4.0	5.0°F (or °C)	+/− 2.5°F (+/−1.4°C)	RETURN AIR TEMPERATURE CALIBRATION Allows for the operator to adjust for an out of calibration return air temperature (RA) sensor
RA H CAL		0% RH	+/− 10% RH	RETURN AIR HUMIDITY CALIBRATION Allows for the operator to adjust for an out of calibration return air enthalpy sensor
DA T CAL	0.0	1.0°F (or °C)	+/− 2.5°F (+/−1.4°C)	DISCHARGE AIR TEMPERATURE CALIBRATION Allows for the operator to adjust for an out of calibration discharge air temperature (DAT) sensor
2SP FAN DELAY		5 Minutes	0 to 20 minutes in 1 minute increments	TIME DELAY ON 2ND STAGE ECONOMIZING While in the Economizing mode, this is the delay between thermostat Y2 call and Y1−O output to mechanical cooling stage, to allow high speed fan operation to attempt to cool space first.

Menu 3: Setpoints

Parameter	Project Value	Parameter Default Value	Parameter Range and Increment	Notes
MAT SET		53°F (12°C)	38 to 65°F; (3 to 18°C) increment by 1°	SUPPLY AIR SETPOINT Setpoint determines where the economizer will modulate the OA damper to maintain the supply air temperature. See Menu Note 2 (on page 44).
LOW T LOCK		32°F (0°C)	−45 to 80°F (−43 to 27°C) increment by 1°	COMPRESSOR LOW TEMPERATURE LOCKOUT Setpoint determines outdoor temperature when the mechanical cooling cannot be turned on.
DRYBLB SET		63°F (17°C)	48 to 80°F; (9 to 27°C) increment by 1°	OA DRY BULB TEMPERATURE CHANGEOVER SETPOINT Setpoint determines where the economizer will assume outdoor air temperature is good for free cooling; e.g.: at 63°F (17°C), unit will economize at 62°F (16.7°C) and below and not economize at 64°F (17.8°C) and above. There is a 2°F (1.1°C) deadband. See Menu Note 3 (on page 44).
ENTH CURVE		ES3	ES1, ES2, ES3, ES4, or ES5	ENTHALPY CHANGEOVER CURVE (Requires enthalpy sensor option) Enthalpy boundary "curves" for economizing using single enthalpy.
DCV SET		1100ppm	500 to 2000 ppm; increment by 100	DEMAND CONTROL VENTILATION SETPOINT Displays only if CO_2 sensor is connected. Setpoint for Demand Control Ventilation of space. Above the setpoint, the OA dampers will modulate open to bring in additional OA to maintain a space ppm level below the setpoint.
MIN POS L		6.0 V	2 to 10Vdc	VENTILATION MINIMUM POSITION AT LOW SPEED Displays ONLY if a CO2 sensor is NOT connected.
MIN POS H		4.4 V	2 to 10Vdc	VENTILATION MINIMUM POSITION AT HIGH SPEED Displays ONLY if a CO2 sensor is NOT connected.
VENTMAX L		6.0 V	2 to 10Vdc	DCV MAXIMUM DAMPER POSITION AT LOW SPEED (Requires CO_2 sensor connected)
VENTMAX H		4.4 V	2 to 10Vdc	DCV MAXIMUM DAMPER POSITION AT HIGH SPEED (Requires CO_2 sensor connected)
VENTMIN L		3.7 V	2 to 10Vdc	DCV MINIMUM DAMPER POSITION AT LOW SPEED (Requires CO_2 sensor connected)
VENTMIN H		2.8 V	2 to 10Vdc	DCV MINIMUM DAMPER POSITION AT HIGH SPEED (Requires CO_2 sensor connected)
ERV OAT SP		32°F (0°C)	0 to 50°F; (−18 to 10°C) increment by 1°	ENERGY RECOVERY VENTILATION UNIT OUTDOOR AIR TEMPERATURE SETPOINT Only when AUX1 O = ERV
EXH1 L SET		65%	0 to 100%; increment by 1	EXHAUST FAN STAGE 1 SETPOINT AT LOW SPEED Setpoint for OA damper position when exhaust fan1 is powered by the economizer.
EXH1 H SET		50%	0 to 100%; increment by 1	EXHAUST FAN STAGE 1 SETPOINT AT HIGH SPEED Setpoint for OA damper position when exhaust fan1 is powered by the economizer.
EXH2 L SET		80%	0 to 100%; increment by 1	EXHAUST FAN STAGE 2 SETPOINT AT LOW SPEED Setpoint for OA damper position when exhaust fan 2 is powered by the economizer. Only used when AUX1−O is set to EHX2.
EXH2 H SET		75%	0 to 100%; increment by 1	EXHAUST FAN STAGE 2 SETPOINT AT HIGH SPEED Setpoint for OA damper position when exhaust fan 2 is powered by the economizer. Only used when AUX1−O is set to EHX2.

Staged Air Volume (SAV™) with Variable Frequency Drive

The Staged Air Volume (SAV) system utilizes a Variable Frequency Drive (VFD) to automatically adjust the indoor fan motor speed in sequence with the unit's ventilation, cooling and heating operation. Per ASHRAE 90.1 2010 standard section 6.4.3.10.b, during the first stage of cooling operation the SAV system will adjust the fan motor to provide two-thirds (2/3) of the design airflow rate for the unit. When the call for the second stage of cooling is required, the SAV system will allow the design airflow rate for the unit established (100%). During the heating mode, the SAV system will allow total design airflow rate (100%) operation. During ventilation mode, the SAV system will operate the fan motor at 2/3 speed.

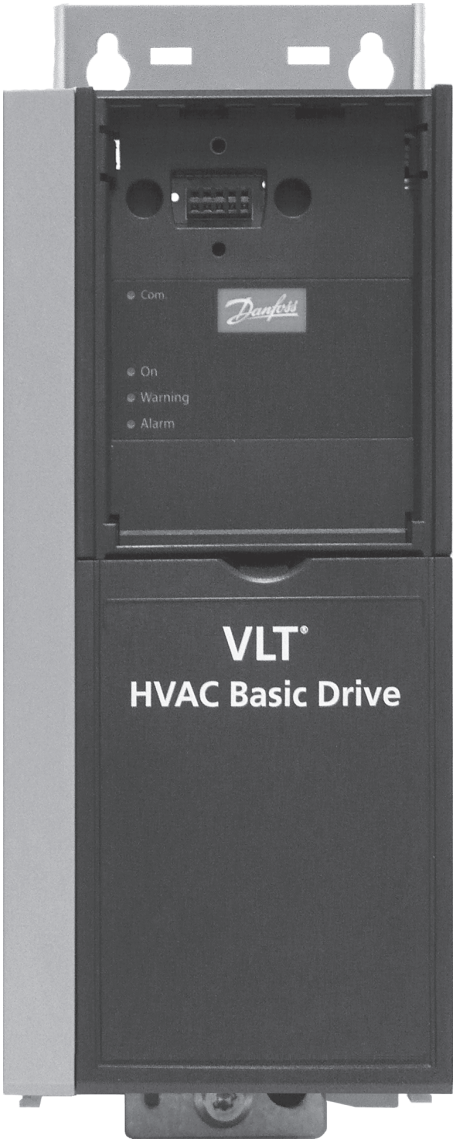

C13110

Fig. 63 - Variable Frequency Drive (VFD)

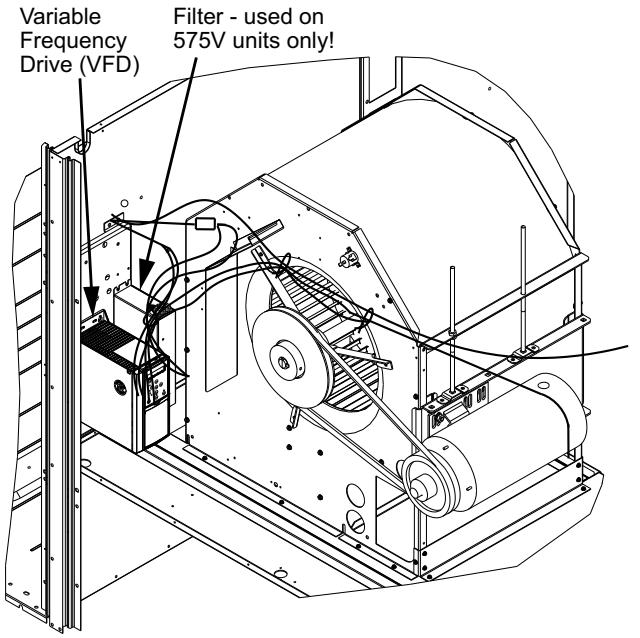

C13111

Fig. 64 - VFD Location, 07 Unit

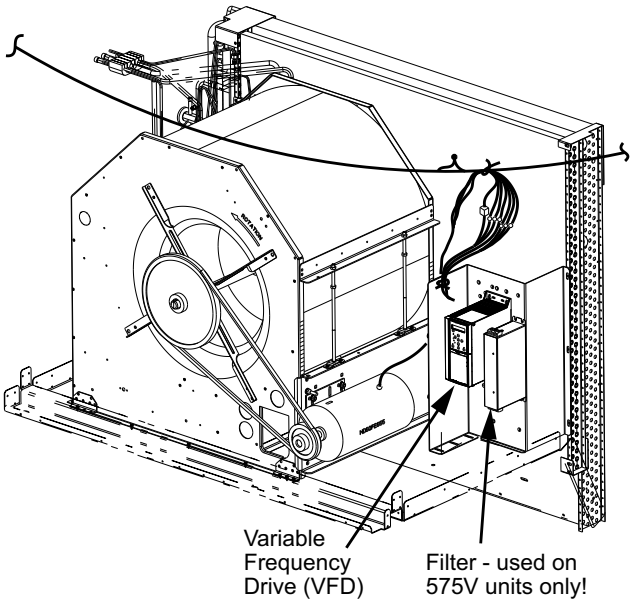

C13229

Fig. 65 - VFD Location, 08-12 Units

Multi-Speed VFD Display Kit (Field-Installed Option)

NOTE: The Remote VFD Keypad is part of the Multi-Speed VFD display kit (PN: CRDISKIT002A00) which is a field-installed option. It is not included with the 50LC 07 base unit.

The VFD keypad as shown in Fig. 66 consists of the following sections:

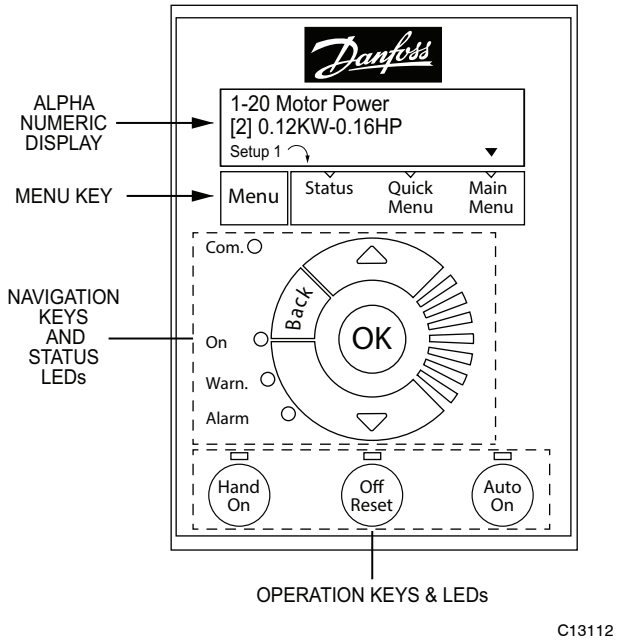

Fig. 66 - VFD Keypad

Alpha Numeric Display: The LCD display is back lit with 2 alpha-numeric lines. All data is displayed on the LCD.

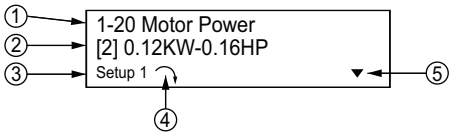

1	Parameter number and name.
2	Parameter value.
3	Setup number shows the active setup and the edit setup. If the same set-up acts as both the active and edit set-up, only that setup number is shown (factory setting). When the active and edit setup differ, both numbers are shown in the display (SETUP 12). The flashing number indicates the edit setup.
4	The symbol in the number 4 position in the figure above indicates motor direction. The arrow point either clockwise or counter-clockwise to show the motor's current direction.
5	The position of the triangle indicates the currently selected menu: Status, Quick Menu or Main Menu.

Menu Key: Use the Menu key to select between Status, Quick Menu or Main Menu. The triangle icon at the bottom of the LCD display indicates the currently selected mode. (See number 5 in the table above.)

Navigation Keys and Status LEDs: The Navigation keys and Status LEDs are detailed in the following table.

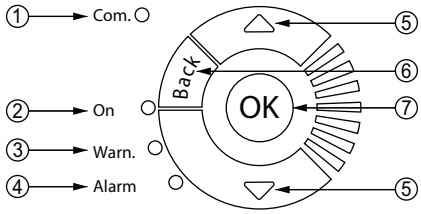

1	**Com.** LED: Flashes when bus communications is communicating.
2	Green LED/**On**: Control selection is working.
3	Yellow LED/**Warn.**: Indicates a warning.
4	Flashing Red LED/**Alarm**: Indicates an alarm.
5	**Arrows ▲▼**: Use the Up and Down arrow keys to navigate between parameter groups, parameters and within parameters. Also used for setting local reference.
6	**Back** key: Press to move to the previous step or layer in the navigation structure.
7	**OK** key: Press to select the currently displayed parameter and for accepting changes to parameter settings.

Operation Keys and LEDs: The following table details the functions of the Operating keys. An illuminated yellow LED above the key indicates the active key.

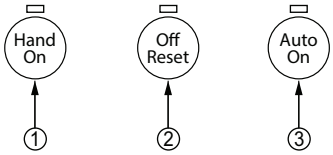

1	**Hand On** key: Starts the motor and enables control of the variable frequency drive (VFD) via the VFD Keypad option. **NOTE**: Please note that terminal 27 Digital Input *(5-12 Terminal 27 Digital Input)* has coast inverse as default setting. This means that the Hand On key will not start the motor if there is no 24V to terminal 27, so be sure to connect terminal 12 to terminal 27.
2	**Off/Reset** key: Stops the motor (off). If in alarm mode the alarm will be reset.
3	**Auto On** key: The variable frequency drive is controlled either via control terminals or serial communication.

Connecting the Keypad to the VFD

The VFD keypad can be mounted directly to the variable frequency drive, provided you can easily access the front panel of the VFD. If you don't have easy access to the VFD front panel, use the cable included with the kit to connect the keypad to the VFD.

Connecting the Keypad Directly to the VFD —

1. Place the bottom of the VFD keypad into the variable frequency drive as shown in Fig. 67.

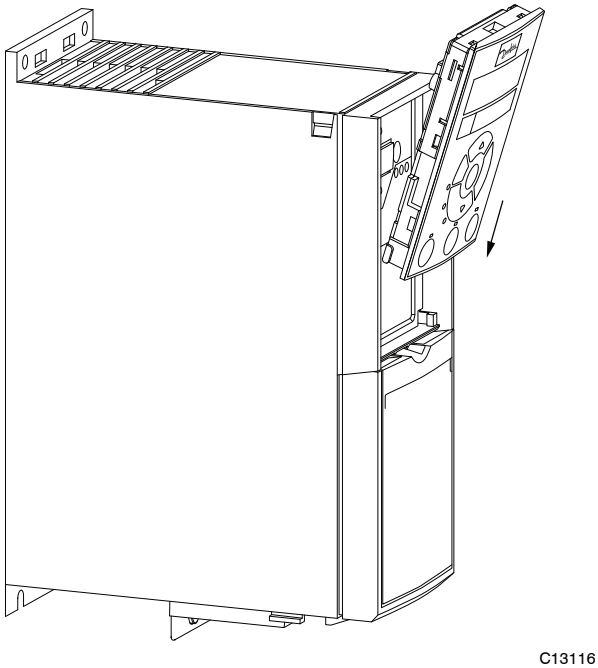

Fig. 67 - Align Bottom of VFD Keypad with Opening in VFD Front Panel

2. Push the top of the VFD keypad into the variable frequency drive as shown in Fig. 68.

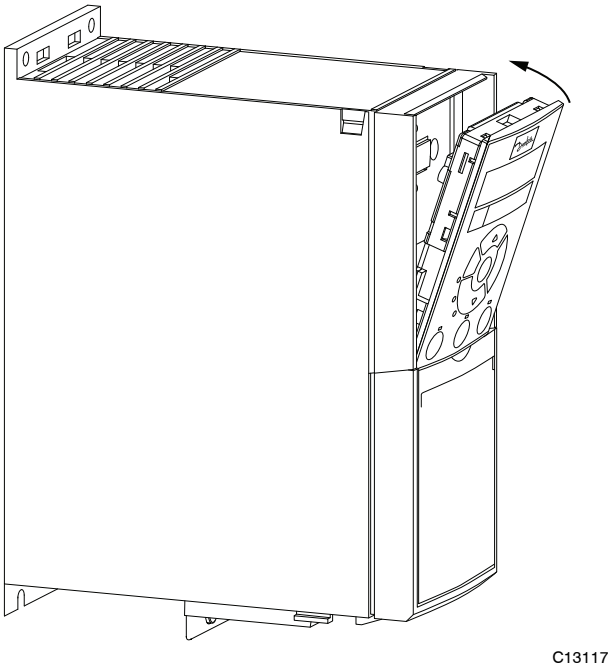

Fig. 68 - Secure Keypad in Place

Using the Cable to Connect the Keypad to the VFD —

The VFD keypad can be connected to the variable frequency drive via the cable included with the Multi-Speed VFD display kit (PN: CRDISKIT002A00).

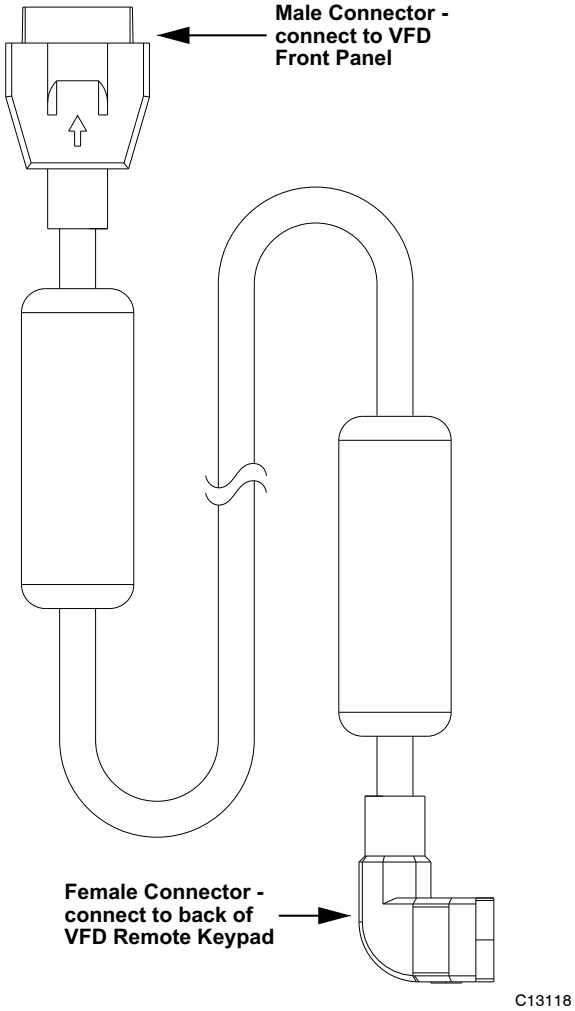

Fig. 69 - VFD Remote Keypad Cable

1. Connect the male end of the cable to the front panel of the variable frequency drive. Use 2 of the screws included with the kit to secure the cable to the VFD.
2. Connect the female end of the cable to the back panel of the VFD Remote keypad. Secure the cable to the remote keypad using the 2 remaining screws from the kit.

Program the VFD for 3 Discrete Indoor Fan Speeds

IMPORTANT: 50LC 07 units are programmed at the Factory for 3 discrete indoor fan speeds. The following procedure is only to be used to recover this function after an event such as a system crash.

NOTE: This procedure requires use of the VFD Keypad which is included as part of the field-installed Multi-Speed VFD display kit (PN: CRDISKIT002A00). If the VFD keypad is not already installed, install it. See "Connecting the Keypad to the VFD" for details.

To program the VFD for 3 discreet indoor fan motor speeds:

1. At Power-Up:

   At the first power up the LCD displays the Select Language screen. The default setting is English. To

change the language, press the **OK** key and use the ▲ and ▼ keys to scroll to the desired language and then press **OK**.

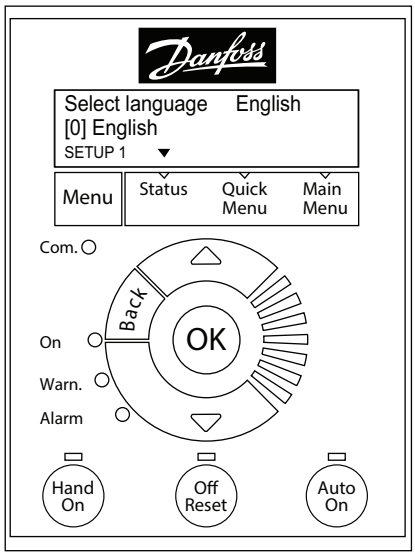

C13119

Fig. 70 - Keypad with Power Up Screen Displayed

2. Selecting Regional Settings:
   a. Press the **Off Reset** key.
   b. Press the **Menu** key to move the ▼(triangle icon) so it is positioned over Main Menu. The display show the following -

0-** Operation / Display
1-** Load and Motor

   c. Press the **OK** key, the display changes to -

0-0* Basic Settings
0-1* Set-up Operations

   d. With the top row highlighted, press **OK**. The display changes to -

0-01 Language
[0] English

NOTE: If English is not the desired language press **OK**, select the desired language and press **OK** again.

   e. Press ▼(**Down Arrow** key) once; the display changes to -

0-03 Regional Settings
[0] International

   f. Press **OK**; the [0] is now highlighted.
   g. Press ▼(**Down Arrow**) key once; the display changes to -

0-03 Regional Settings
[1] North America

   h. Press **OK**

NOTE: If the Alarm 060 appears, follow Step 3 to clear the alarm. Make sure to press **Off Reset** when done. If there is no alarm, continue at Step 4.

3. Clearing Alarm 060: External Interlock:
   a. Press the **Menu** key twice to position the ▼(triangle icon) over Main Menu; the display changes to -

0-** Operation / Display
1-** Load and Motor

   b. Press the ▼(**Down Arrow**) key until the following display appears -

4-** Limits / Warnings
5-** Digital In/Out

   c. Press **OK**. The display changes to -

5-0* Digital I/O mode
5-1* Digital Inputs

   d. Press ▼(**Down Arrow**) once to highlight the bottom row and press **OK**. The display changes to -

5-10 Terminal 18 Digital In...
[8] Start

   e. Press ▼(**Down Arrow**) twice; the following display appears-

5-12 Terminal 27 Digital In...
[7] External Interlock

   f. Press **OK** to highlight the number in the bracket.
   g. Press ▼(**Down Arrow**) until the following display appears -

5-12 Terminal 27 Digital In...
[0] No operation

   h. Press **OK**.
   i. Press **Off Reset.** The Alarm indicator disappears.

4. Entering Grid Type:
   a. Press the **Menu** key to move the ▼(triangle icon) so it is positioned over Main Menu. The display show the following -

0-0* Basic Settings
0-1* Set-up Operations

   b. Press **OK** twice: the display changes to -

0-01 Language
[0] English

   c. Press ▼(**Down Arrow**) three times, to reach the following display -

0-06 Grid Type
[102] 200-240V/60Hz

   d. Press **OK** to highlight the number in the bracket and then use the ▲ and ▼ (**Up** and **Down Arrow**) keys to select the desired voltage and Hertz for the unit.
   e. Press **OK** to accept the selection and continue.

5. Entering Motor Data:
   a. Press the **Menu** key to move the ▼(triangle icon) so it is positioned over Main Menu. The display show the following -

0–** Operation / Display
1–** Load and Motor

   b. Press ▼**(Down Arrow)** once to highlight the bottom row.
   c. Press **OK**, the display changes to -

1–0* General Settings
1–1* Motor Selection

   d. Press ▼**(Down Arrow)** twice to reach the following display -

1–1* Motor Selection
1–2* Motor Data

   e. Press **OK**, the following display appears -

1-20 Motor Power
[9] 1.5kW – 2 hp

NOTE: The number in the bracket may be different from what is shown above.

   f. Press **OK** and then use the ▲ and ▼ (**Up** and **Down Arrow**) keys to scroll to the proper motor horsepower. Press **OK** again to set the selected hp.
   g. Press ▼**(Down Arrow)** once, the following display appears -

1-22 Motor Voltage
230V

   h. Press **OK** to highlight the voltage value. Use the ▲ and ▼ (**Up** and **Down Arrow**) keys to select the nameplate voltage. Press **OK** again to set the selected voltage.
   i. Press ▼**(Down Arrow)** once to display the following -

1-23 Motor Frequency
60Hz

   j. Press **OK** to highlight the Frequency value and then use the ▲ and ▼ (**Up** and **Down Arrow**) keys to select the nameplate Hz. Press **OK** again to set the selected Hz.
   k. Press ▼**(Down Arrow)** once to display the following -

1-24 Motor Current
6.61A

   l. Press **OK** to highlight the Current value and then use the ▲ and ▼ (**Up** and **Down Arrow**) keys to select the Max Amps value provided. Press **OK** again to set the selected Max Amps.

NOTE: The Max Amps is greater than the nameplate value. Check the VFD Unit Parameters (see Table 21 on page NO TAG) and use the value listed for the given unit in the column labeled "Motor Current Must-Hold Amps".

   m. Press ▼**(Down Arrow)** once to display the following -

1-25 Motor Nominal Speed
1740rpm

   n. Press **OK** to highlight the rpm value and then use the ▲ and ▼ (**Up** and **Down Arrow**) keys to select the nameplate rpm. Press **OK** again to set the selected rpm.
6. Entering Parameters for 1-71, 1-73, 1-82, and 1-90:
   a. Press the **Menu** key to move the ▼(triangle icon) so it is positioned over Main Menu. The display show the following -

0–** Operation / Display
1–** Load and Motor

   b. Press ▼**(Down Arrow)** once to highlight the bottom row.
   c. Press **OK**, the display changes to -

1–0* General Settings
1–1* Motor Selection

   d. Press ▼**(Down Arrow)** until the following display appears -

1–6* Load Depen. Setting
1–7* Start Adjustments

   e. Press **OK**, the following display appears -

1-71 Start Delay
2.0s

   f. Press **OK** to highlight the number and then use the ▲ and ▼ (**Up** and **Down Arrow**) keys to select the number provided in Table 21. Press **OK** again to set the selected value.
   g. Press ▼**(Down Arrow)** twice, the following display appears -

1-73 Flying Start
[1] Enabled

   h. Press **OK** to highlight the number in the bracket and then use the ▲ and ▼ (**Up** and **Down Arrow**) keys to select the number provided in Table 21. Press **OK** again to set the selected value.
   i. Press the **Back** key once, the following display appears -

1–6* Load Depen. Setting
1–7* Start Adjustments

   j. Press ▼**(Down Arrow)** once, the following display appears -

1–7* Start Adjustments
1–8* Stop Adjustments

   k. Press **OK**, the following display appears -

1-80 Function at Stop
[0] Coast

l. Press ▼**(Down Arrow)** once, the following display appears -

1-82 Min Speed for Functio…
1.0 Hz

m. Press **OK** to highlight the number and then use the ▲ and ▼ (**Up** and **Down Arrow**) keys to select the number provided in Table 21. Press **OK** again to set the selected value.

n. Press the **Back** key once, the following display appears -

1–7* Start Adjustments
1–8* Stop Adjustments

o. Press ▼**(Down Arrow)** once, the following display appears -

1–8* Stop Adjustments
1–9* Motor Temperature

p. Press **OK**, the following display appears -

1-90 Motor Thermal Prote…
[4] ETR trip 1

q. Press **OK** to highlight the number in the bracket then use the ▲ and ▼ (**Up** and **Down Arrow**) keys to select the number provided in Table 21. Press **OK** again to set the selected value.

7. Setting References:

a. Press the **Menu** key to move the ▼(triangle icon) so it is positioned over Main Menu. The display show the following -

0–** Operation / Display
1–** Load and Motor

b. Press ▼**(Down Arrow)** three times, the following display appears -

2–** Brakes
3–** Reference / Ramps

c. Press **OK**, the following display appears -

3–0* Reference Limits
3–1* References

d. Press **OK** again, the following display appears -

3-02 Minimum Reference
0.000

NOTE: If the bottom row displays a number other than 0.000, press **OK** and use the ▲ and ▼ (**Up** and **Down Arrow**) key to select 0.000.

e. Press ▼**(Down Arrow)** once, the following display appears -

3-03 Maximum Reference
60.000

NOTE: If the bottom row displays a number other than 60.000, press **OK** and use the ▲ and ▼ (**Up** and **Down Arrow**) key to select 60.000.

f. Press the **Back** key until the following display appears -

3–0* Reference Limits
3–1* References

g. Press ▼**(Down Arrow)** once to move the highlight to the bottom row and then press **OK**. The following display appears -

3-10 Preset Reference
[0]0.00%

h. Press **OK** once to highlight the number in the bracket. Press **OK** again; the highlight moves to the current percent value.

Use the ▲ and ▼ (**Up** and **Down Arrow**) keys and the table below to enter the required Preset Reference values.

[0]0.00%	Stop
[1]LL.LL%	Low Speed (see Table 21, column labeled "Preset References 3–10[1]" for the proper % for each unit)
[2]MM.MM%	Medium Speed (see Table 21, column labeled "Preset References 3–10[2]" for the proper % for each unit)
[3]100%	Override (High Speed)
[4]100%	High Speed (100% or close to 100% to achieve the required CFM at high speed)
[5]0.00%	Stop
[6]0.00%	Stop
[7]0.00%	Stop

8. Setting the Ramp Time:

a. Press the **Back** key until the following display appears -

3–0* Reference Limits
3–1* References

b. Press ▼**(Down Arrow)** twice, the following display appears -

3–1* References
3–4* Ramp 1

c. Press **OK**, the following display appears -

3-41 Ramp 1 Ramp up Time
3.00s

d. Press **OK** again to highlight the bottom row and use the ▲ and ▼ (**Up** and **Down Arrow**) keys to select 10.00s. Press **OK** again to set the selected Ramp up Time.

e. Press ▼**(Down Arrow)** once, the following display appears -

3-42 Ramp 1 Ramp Down Time
3.00s

f. Press **OK** again to highlight the bottom row and use the ▲ and ▼ (**Up** and **Down Arrow**) keys to

select 10.00s. Press **OK** again to set the selected Ramp Down Time.

9. Setting Limits:
   a. Press the **Back** key until the following display appears -

2–** Brakes
3–** Reference / Ramps

   b. Press ▼**(Down Arrow)** once, the following display appears -

3–** Reference / Ramps
4–** Limits / Warnings

   c. Press **OK**, the following display appears -

4–1* Motor Limits
4–4* Adj. Warning 2

   d. Press **OK** again, the following display appears -

4-10 Motor Speed Direction
[2] Both Directions

   e. Press ▼**(Down Arrow)** once, the following display appears -

4-12 Motor Speed Low Limi…
0.0Hz

   f. Press ▼**(Down Arrow)** again, the following display appears -

4-14 Motor Speed High Limi…
65.0Hz

NOTE: Press **OK** to highlight the Hz value and then use the ▲ and ▼ (**Up** and **Down Arrow**) keys to enter the required values.

   g. Press ▼**(Down Arrow)** once, the following display appears -

4-18 Current Limit
110%

NOTE: Press **OK** to highlight the % value and then use the ▲ and ▼ (**Up** and **Down Arrow**) keys to enter the required value. See Table 21 for proper selection of the value for this parameter then press **OK** to set the selected value.

   h. Press ▼**(Down Arrow)** once, the following display appears -

4-19 Max Output Frequency
65.0Hz

NOTE: Press **OK** to highlight the Hz value and then use the ▲ and ▼ (**Up** and **Down Arrow**) keys to enter the required values.

10. Setting Digital Inputs:
   a. Press the **Back** key until the following display appears -

3–** Reference / Ramps
4–** Limits / Warnings

   b. Press ▼**(Down Arrow)** once, the following display appears -

4–** Limits / Warnings
5–** Digital In/Out

   c. Press **OK**, the following display appears -

5–0* Digital I/O mode
5–1* Digital Inputs

   d. Press ▼**(Down Arrow)** once to move the highlight to the bottom row and then press **OK**. The following display appears -

5-10 Terminal 18 Digital In…
[8] Start

   e. Press ▼**(Down Arrow)** again. The following display appears -

5-11 Terminal 19 Digital In…
[16] Preset ref bit 0

   f. Press ▼**(Down Arrow)** again. The following display appears -

5-12 Terminal 27 Digital In…
[17] Preset ref bit 1

   g. Press ▼**(Down Arrow)** again. The following display appears -

5-13 Terminal 29 Digital In…
[18] Preset ref bit 2

NOTE: By pressing **OK** the number in the bracket can be changed until the desired number appears. Press **OK** again to set the selected value.

11. Setting Reset Mode and RFI Filter:
   a. Press the **Back** key until the following display appears -

0–** Operation / Display
1–** Load and Motor

   b. Press ▼**(Down Arrow)** until the following display appears -

13–** Smart Logic
14–** Special Functions

   c. Press **OK**, the following display appears -

14–0* Inverter Switching
14–1* Mains On/Off

   d. Press ▼**(Down Arrow)** twice. The following display appears -

14 – 1* Mains On/Off
14 – 2* Reset Functions

e. Press **OK**, the following display appears –

14-20 Reset Mode
[0] Manual reset

f. Press **OK** to highlight the number in the bracket.

g. Use the ▲ and ▼ (**Up** and **Down Arrow**) keys to change the number to 3 for 3 automatic resets and then press **OK**. The display changes to –

14-20 Reset Mode
[3] Automatic reset x 3

h. Press ▼(**Down Arrow**) once, the following display appears –

14-21 Automatic Restart T…
10s

i. Press OK to highlight the number of seconds and use the ▲ and ▼ (**Up** and **Down Arrow**) keys to select 600 seconds. Press **OK** again to set the selected value.

j. Press the **Back** key once, the following display appears –

14 – 1* Mains On/Off
14 – 2* Reset Functions

k. Press ▼(**Down Arrow**) twice, the following display appears –

14 – 4* Energy Optimising
14 – 5* Environment

l. Press **OK**, the following display appears –

14-50 RFI Filter
[1] On

m. Press **OK** to highlight the number in the bracket and use the ▲ and ▼ (**Up** and **Down Arrow**) keys to select [0]. Press **OK** again to set the selected value.

12. To Complete Reprogramming:

a. Press the **Auto On** key before disconnecting the VFD Remote Keypad from the variable frequency drive.

Table 21 – VFD Unit Parameters - 50LC 07 Units

						Regional Settings	Grid Type	Motor Power	Motor Voltage	Motor Frequency (Hz)	Motor Current (Must–Hold Amps)	Motor Nominal Speed (rpm)	Star Delay (Sec)	Flying Start	Min Speed for Function (Hz)	Motor Thermal Protection	Preset Reference		
Voltage	**Unit Size**	**Motor Option**	**Motor P/N**	**VFD Carrier P/N**	**VFD Mfr P/N**	**0–03**	**0–06**	**1–20**	**1–22**	**1–23**	**1–24**	**1–25**	**1–71**	**1–73**	**1–82**	**1–90**	**3–10 [0]**	**3–10 [1]**	**3–10 [2]**
208/230V	07	STD	HD56FR233	HK30WA370	131L9795	[1]	[102]	[9]	230	60	5.8	1695	2.0	[1]	1.0	[4]	0%	66.50%	66.50%
460V	07	STD	HD56FR463	HK30WA376	131L9863	[1]	[122]	[9]	460	60	2.9	1690	2.0	[1]	1.0	[4]	0%	66.50%	66.50%
575V	07	STD	HD56FR579	HK30WA382	131N0225	[1]	[132]	[9]	575	60	3.1	1690	2.0	[1]	1.0	[4]	0%	66.50%	66.50%
208/230V	07	MID	HD56FR233	HK30WA370	131L9795	[1]	[102]	[9]	230	60	5.8	1695	2.0	[1]	1.0	[4]	0%	66.50%	66.50%
460V	07	MID	HD56FR463	HK30WA376	131L9863	[1]	[122]	[9]	460	60	2.9	1690	2.0	[1]	1.0	[4]	0%	66.50%	66.50%
575V	07	MID	HD56FR579	HK30WA382	131N0225	[1]	[132]	[9]	575	60	3.1	1690	2.0	[1]	1.0	[4]	0%	66.50%	66.50%
208/230V	07	HIGH	HD58FE654	HK30WA371	131L9796	[1]	[102]	[10]	230	60	9.2	1735	2.0	[1]	1.0	[4]	0%	66.50%	66.50%
460V	07	HIGH	HD58FE654	HK30WA377	131L9864	[1]	[122]	[10]	460	60	4.2	1735	2.0	[1]	1.0	[4]	0%	66.50%	66.50%
575V	07	HIGH	HD58FE577	HK30WA383	131N0227	[1]	[132]	[11]	575	60	4.9	1710	2.0	[1]	1.0	[4]	0%	66.50%	66.50%

						Preset Reference (cont.)					Ramp Up Time (Sec)	Ramp Down Time (Sec)	Current Limit	Terminal 18 Digital Input	Terminal 19 Digital Input	Terminal 27 Digital Input	Terminal 29 Digital Input	Reset Mode	Auto. Restart Time (S)	RFI Filter
Voltage	**Unit Size**	**Motor Option**	**Motor P/N**	**VFD Carrier P/N**	**VFD Mfr P/N**	**3–10 [3]**	**3–10 [4]**	**3–10 [5]**	**3–10 [6]**	**3–10 [7]**	**3–41**	**3–42**	**4–18**	**5–10**	**5–11**	**5–12**	**5–13**	**14–20**	**14–21**	**14–50**
208/230V	07	STD	HD56FR233	HK30WA370	131L9795	100%	100%	0%	0%	0%	10.00	10.00	100%	[8]	[16]	[17]	[18]	[3]	600	[0]
460V	07	STD	HD56FR463	HK30WA376	131L9863	100%	100%	0%	0%	0%	10.00	10.00	100%	[8]	[16]	[17]	[18]	[3]	600	[0]
575V	07	STD	HD56FR579	HK30WA382	131N0225	100%	100%	0%	0%	0%	10.00	10.00	100%	[8]	[16]	[17]	[18]	[3]	600	[0]
208/230V	07	MID	HD56FR233	HK30WA370	131L9795	100%	100%	0%	0%	0%	10.00	10.00	100%	[8]	[16]	[17]	[18]	[3]	600	[0]
460V	07	MID	HD56FR463	HK30WA376	131L9863	100%	100%	0%	0%	0%	10.00	10.00	100%	[8]	[16]	[17]	[18]	[3]	600	[0]
575V	07	MID	HD56FR579	HK30WA382	131N0225	100%	100%	0%	0%	0%	10.00	10.00	100%	[8]	[16]	[17]	[18]	[3]	600	[0]
208/230V	07	HIGH	HD58FE654	HK30WA371	131L9796	100%	100%	0%	0%	0%	10.00	10.00	100%	[8]	[16]	[17]	[18]	[3]	600	[0]
460V	07	HIGH	HD58FE654	HK30WA377	131L9864	100%	100%	0%	0%	0%	10.00	10.00	100%	[8]	[16]	[17]	[18]	[3]	600	[0]
575V	07	HIGH	HD58FE577	HK30WA383	131N0227	100%	100%	0%	0%	0%	10.00	10.00	100%	[8]	[16]	[17]	[18]	[3]	600	[0]

Table 22 – VFD Unit Parameters - 50LC 08 Units

						Regional Settings	Grid Type	Motor Power	Motor Voltage	Motor Frequency (Hz)	Motor Current (Must–Hold Amps)	Motor Nominal Speed (rpm)	Star Delay (Sec)	Flying Start	Min Speed for Function (Hz)	Motor Thermal Protection	Preset Reference		
Voltage	Unit Size	Motor Option	Motor P/N	VFD Carrier P/N	VFD Mfr P/N	0–03	0–06	1–20	1–22	1–23	1–24	1–25	1–71	1–73	1–82	1–90	3–10 [0]	3–10 [1]	3–10 [2]
208/230V	08	STD	HD56FR233	HK30WA370	131L9795	[1]	[102]	[9]	230	60	5.8	1695	2.0	[1]	1.0	[4]	0%	66.50%	66.50%
460V	08	STD	HD56FR463	HK30WA376	131L9863	[1]	[122]	[9]	460	60	2.9	1690	2.0	[1]	1.0	[4]	0%	66.50%	66.50%
575V	08	STD	HD56FR579	HK30WA382	131N0225	[1]	[132]	[9]	575	60	3.1	1690	2.0	[1]	1.0	[4]	0%	66.50%	66.50%
208/230V	08	MID	HD56FR233	HK30WA370	131L9795	[1]	[102]	[9]	230	60	5.8	1695	2.0	[1]	1.0	[4]	0%	66.50%	66.50%
460V	08	MID	HD56FR463	HK30WA376	131L9863	[1]	[122]	[9]	460	60	2.9	1690	2.0	[1]	1.0	[4]	0%	66.50%	66.50%
575V	08	MID	HD56FR579	HK30WA382	131N0225	[1]	[132]	[9]	575	60	3.1	1690	2.0	[1]	1.0	[4]	0%	66.50%	66.50%
208/230V	08	HIGH	HD58FE654	HK30WA371	131L9796	[1]	[102]	[10]	230	60	9.2	1735	2.0	[1]	1.0	[4]	0%	66.50%	66.50%
460V	08	HIGH	HD58FE654	HK30WA377	131L9864	[1]	[122]	[10]	460	60	4.2	1735	2.0	[1]	1.0	[4]	0%	66.50%	66.50%
575V	08	HIGH	HD58FE577	HK30WA383	131N0227	[1]	[132]	[11]	575	60	4.9	1710	2.0	[1]	1.0	[4]	0%	66.50%	66.50%
208/230V	08	ULTRA	HD60FE656	HK30WA372	131L9797	[1]	[102]	[11]	230	60	11.7	1750	2.0	[1]	1.0	[4]	0%	66.50%	66.50%
460V	08	ULTRA	HD60FE656	HK30WA378	131L9865	[1]	[122]	[11]	460	60	5.4	1750	2.0	[1]	1.0	[4]	0%	66.50%	66.50%
575V	08	ULTRA	HD58FE577	HK30WA383	131N0227	[1]	[132]	[11]	575	60	4.9	1710	2.0	[1]	1.0	[4]	0%	66.50%	66.50%

						Preset Reference (cont.)					Ramp Up Time (Sec)	Ramp Down Time (Sec)	Current Limit	Terminal 18 Digital Input	Terminal 19 Digital Input	Terminal 27 Digital Input	Terminal 29 Digital Input	Reset Mode	Auto. Restart Time (S)	RFI Filter
Voltage	Unit Size	Motor Option	Motor P/N	VFD Carrier P/N	VFD Mfr P/N	3–10 [3]	3–10 [4]	3–10 [5]	3–10 [6]	3–10 [7]	3–41	3–42	4–18	5–10	5–11	5–12	5–13	14–20	14–21	14–50
208/230V	08	STD	HD56FR233	HK30WA370	131L9795	100%	100%	0%	0%	0%	10.00	10.00	100%	[8]	[16]	[17]	[18]	[3]	600	[0]
460V	08	STD	HD56FR463	HK30WA376	131L9863	100%	100%	0%	0%	0%	10.00	10.00	100%	[8]	[16]	[17]	[18]	[3]	600	[0]
575V	08	STD	HD56FR579	HK30WA382	131N0225	100%	100%	0%	0%	0%	10.00	10.00	100%	[8]	[16]	[17]	[18]	[3]	600	[0]
208/230V	08	MID	HD56FR233	HK30WA370	131L9795	100%	100%	0%	0%	0%	10.00	10.00	100%	[8]	[16]	[17]	[18]	[3]	600	[0]
460V	08	MID	HD56FR463	HK30WA376	131L9863	100%	100%	0%	0%	0%	10.00	10.00	100%	[8]	[16]	[17]	[18]	[3]	600	[0]
575V	08	MID	HD56FR579	HK30WA382	131N0225	100%	100%	0%	0%	0%	10.00	10.00	100%	[8]	[16]	[17]	[18]	[3]	600	[0]
208/230V	08	HIGH	HD58FE654	HK30WA371	131L9796	100%	100%	0%	0%	0%	10.00	10.00	100%	[8]	[16]	[17]	[18]	[3]	600	[0]
460V	08	HIGH	HD58FE654	HK30WA377	131L9864	100%	100%	0%	0%	0%	10.00	10.00	100%	[8]	[16]	[17]	[18]	[3]	600	[0]
575V	08	HIGH	HD58FE577	HK30WA383	131N0227	100%	100%	0%	0%	0%	10.00	10.00	100%	[8]	[16]	[17]	[18]	[3]	600	[0]
208/230V	08	ULTRA	HD60FE656	HK30WA372	131L9797	100%	100%	0%	0%	0%	10.00	10.00	100%	[8]	[16]	[17]	[18]	[3]	600	[0]
460V	08	ULTRA	HD60FE656	HK30WA378	131L9865	100%	100%	0%	0%	0%	10.00	10.00	100%	[8]	[16]	[17]	[18]	[3]	600	[0]
575V	08	ULTRA	HD58FE577	HK30WA383	131N0227	100%	100%	0%	0%	0%	10.00	10.00	100%	[8]	[16]	[17]	[18]	[3]	600	[0]

Table 23 – VFD Unit Parameters - 50LC 09 Units

						Regional Settings	Grid Type	Motor Power	Motor Voltage	Motor Frequency (Hz)	Motor Current (Must–Hold Amps)	Motor Nominal Speed (rpm)	Star Delay (Sec)	Flying Start	Min Speed for Function (Hz)	Motor Thermal Protection	Preset Reference		
Voltage	Unit Size	Motor Option	Motor P/N	VFD Carrier P/N	VFD Mfr P/N	0–03	0–06	1–20	1–22	1–23	1–24	1–25	1–71	1–73	1–82	1–90	3–10 [0]	3–10 [1]	3–10 [2]
208/230V	09	STD	HD56FR233	HK30WA370	131L9795	[1]	[102]	[9]	230	60	5.8	1695	2.0	[1]	1.0	[4]	0%	66.50%	66.50%
460V	09	STD	HD56FR463	HK30WA376	131L9863	[1]	[122]	[9]	460	60	2.9	1690	2.0	[1]	1.0	[4]	0%	66.50%	66.50%
575V	09	STD	HD56FR579	HK30WA382	131N0225	[1]	[132]	[9]	575	60	3.1	1690	2.0	[1]	1.0	[4]	0%	66.50%	66.50%
208/230V	09	MID	HD56FR233	HK30WA370	131L9795	[1]	[102]	[9]	230	60	5.8	1695	2.0	[1]	1.0	[4]	0%	66.50%	66.50%
460V	09	MID	HD56FR463	HK30WA376	131L9863	[1]	[122]	[9]	460	60	2.9	1690	2.0	[1]	1.0	[4]	0%	66.50%	66.50%
575V	09	MID	HD56FR579	HK30WA382	131N0225	[1]	[132]	[9]	575	60	3.1	1690	2.0	[1]	1.0	[4]	0%	66.50%	66.50%
208/230V	09	HIGH	HD60FE656	HK30WA372	131L9797	[1]	[102]	[11]	230	60	11.7	1750	2.0	[1]	1.0	[4]	0%	66.50%	66.50%
460V	09	HIGH	HD60FE656	HK30WA378	131L9865	[1]	[122]	[11]	460	60	5.4	1750	2.0	[1]	1.0	[4]	0%	.66.50%	66.50%
575V	09	HIGH	HD58FE577	HK30WA383	131N0227	[1]	[132]	[11]	575	60	4.9	1710	2.0	[1]	1.0	[4]	0%	66.50%	66.50%
208/230V	09	ULTRA	HD60FK658	HK30WA372	131L9797	[1]	[102]	[13]	230	60	13.6	1745	2.0	[1]	1.0	[4]	0%	66.50%	66.50%
460V	09	ULTRA	HD60FK658	HK30WA379	131L9866	[1]	[122]	[13]	460	60	6.8	1745	2.0	[1]	1.0	[4]	0%	66.50%	66.50%
575V	09	ULTRA	HD60FE576	HK30WA387	134F0217	[1]	[132]	[13]	575	60	6.0	1745	2.0	[1]	1.0	[4]	0%	66.50%	66.50%

						Preset Reference (cont.)					Ramp Up Time (Sec)	Ramp Down Time (Sec)	Current Limit	Terminal 18 Digital Input	Terminal 19 Digital Input	Terminal 27 Digital Input	Terminal 29 Digital Input	Reset Mode	Auto. Restart Time (S)	RFI Filter
Voltage	Unit Size	Motor Option	Motor P/N	VFD Carrier P/N	VFD Mfr P/N	3–10 [3]	3–10 [4]	3–10 [5]	3–10 [6]	3–10 [7]	3–41	3–42	4–18	5–10	5–11	5–12	5–13	14–20	14–21	14–50
208/230V	09	STD	HD56FR233	HK30WA370	131L9795	100%	100%	0%	0%	0%	10.00	10.00	100%	[8]	[16]	[17]	[18]	[3]	600	[0]
460V	09	STD	HD56FR463	HK30WA376	131L9863	100%	100%	0%	0%	0%	10.00	10.00	100%	[8]	[16]	[17]	[18]	[3]	600	[0]
575V	09	STD	HD56FR579	HK30WA382	131N0225	100%	100%	0%	0%	0%	10.00	10.00	100%	[8]	[16]	[17]	[18]	[3]	600	[0]
208/230V	09	MID	HD56FR233	HK30WA370	131L9795	100%	100%	0%	0%	0%	10.00	10.00	100%	[8]	[16]	[17]	[18]	[3]	600	[0]
460V	09	MID	HD56FR463	HK30WA376	131L9863	100%	100%	0%	0%	0%	10.00	10.00	100%	[8]	[16]	[17]	[18]	[3]	600	[0]
575V	09	MID	HD56FR579	HK30WA382	131N0225	100%	100%	0%	0%	0%	10.00	10.00	100%	[8]	[16]	[17]	[18]	[3]	600	[0]
208/230V	09	HIGH	HD60FE656	HK30WA372	131L9797	100%	100%	0%	0%	0%	10.00	10.00	100%	[8]	[16]	[17]	[18]	[3]	600	[0]
460V	09	HIGH	HD60FE656	HK30WA378	131L9865	100%	100%	0%	0%	0%	10.00	10.00	100%	[8]	[16]	[17]	[18]	[3]	600	[0]
575V	09	HIGH	HD58FE577	HK30WA383	131N0227	100%	100%	0%	0%	0%	10.00	10.00	100%	[8]	[16]	[17]	[18]	[3]	600	[0]
208/230V	09	ULTRA	HD60FK658	HK30WA372	131L9797	100%	100%	0%	0%	0%	10.00	10.00	100%	[8]	[16]	[17]	[18]	[3]	600	[0]
460V	09	ULTRA	HD60FK658	HK30WA379	131L9866	100%	100%	0%	0%	0%	10.00	10.00	100%	[8]	[16]	[17]	[18]	[3]	600	[0]
575V	09	ULTRA	HD60FE576	HK30WA387	134F0217	100%	100%	0%	0%	0%	10.00	10.00	100%	[8]	[16]	[17]	[18]	[3]	600	[0]

Table 24 – VFD Unit Parameters - 50LC 12 Units

						Regional Settings	Grid Type	Motor Power	Motor Voltage	Motor Frequency (Hz)	Motor Current (Must–Hold Amps)	Motor Nominal Speed (rpm)	Star Delay (Sec)	Flying Start	Min Speed for Function (Hz)	Motor Thermal Protection	Preset Reference		
Voltage	**Unit Size**	**Motor Option**	**Motor P/N**	**VFD Carrier P/N**	**VFD Mfr P/N**	**0–03**	**0–06**	**1–20**	**1–22**	**1–23**	**1–24**	**1–25**	**1–71**	**1–73**	**1–82**	**1–90**	**3–10 [0]**	**3–10 [1]**	**3–10 [2]**
208/230V	12	STD	HD56FE653	HK30WA371	131L9796	[1]	[102]	[10]	230	60	7.9	1680	2.0	[1]	1.0	[4]	0%	66.50%	66.50%
460V	12	STD	HD56FE653	HK30WA377	131L9864	[1]	[122]	[10]	460	60	3.6	1680	2.0	[1]	1.0	[4]	0%	66.50%	66.50%
575V	12	STD	HD56FE577	HK30WA382	131N0225	[1]	[132]	[11]	575	60	3.8	1680	2.0	[1]	1.0	[4]	0%	66.50%	66.50%
208/230V	12	MID	HD58FE654	HK30WA371	131L9796	[1]	[102]	[10]	230	60	9.2	1735	2.0	[1]	1.0	[4]	0%	66.50%	66.50%
460V	12	MID	HD58FE654	HK30WA377	131L9864	[1]	[122]	[10]	460	60	4.2	1735	2.0	[1]	1.0	[4]	0%	66.50%	66.50%
575V	12	MID	HD58FE577	HK30WA383	131N0227	[1]	[132]	[11]	575	60	4.9	1710	2.0	[1]	1.0	[4]	0%	66.50%	66.50%
208/230V	12	HIGH	HD60FK658	HK30WA372	131L9797	[1]	[102]	[13]	230	60	13.6	1745	2.0	[1]	1.0	[4]	0%	66.50%	66.50%
460V	12	HIGH	HD60FK658	HK30WA379	131L9866	[1]	[122]	[13]	460	60	6.8	1745	2.0	[1]	1.0	[4]	0%	66.50%	66.50%
575V	12	HIGH	HD60FE576	HK30WA387	134F0217	[1]	[132]	[13]	575	60	6.0	1745	2.0	[1]	1.0	[4]	0%	66.50%	66.50%

						Preset Reference (cont.)					Ramp Up Time (Sec)	Ramp Down Time (Sec)	Current Limit	Terminal 18 Digital Input	Terminal 19 Digital Input	Terminal 27 Digital Input	Terminal 29 Digital Input	Reset Mode	Auto. Restart Time (S)	RFI Filter
Voltage	**Unit Size**	**Motor Option**	**Motor P/N**	**VFD Carrier P/N**	**VFD Mfr P/N**	**3–10 [3]**	**3–10 [4]**	**3–10 [5]**	**3–10 [6]**	**3–10 [7]**	**3–41**	**3–42**	**4–18**	**5–10**	**5–11**	**5–12**	**5–13**	**14–20**	**14–21**	**14–50**
208/230V	12	STD	HD56FE653	HK30WA371	131L9796	100%	100%	0%	0%	0%	10.00	10.00	100%	[8]	[16]	[17]	[18]	[3]	600	[0]
460V	12	STD	HD56FE653	HK30WA377	131L9864	100%	100%	0%	0%	0%	10.00	10.00	100%	[8]	[16]	[17]	[18]	[3]	600	[0]
575V	12	STD	HD56FE577	HK30WA382	131N0225	100%	100%	0%	0%	0%	10.00	10.00	100%	[8]	[16]	[17]	[18]	[3]	600	[0]
208/230V	12	MID	HD58FE654	HK30WA371	131L9796	100%	100%	0%	0%	0%	10.00	10.00	100%	[8]	[16]	[17]	[18]	[3]	600	[0]
460V	12	MID	HD58FE654	HK30WA377	131L9864	100%	100%	0%	0%	0%	10.00	10.00	100%	[8]	[16]	[17]	[18]	[3]	600	[0]
575V	12	MID	HD58FE577	HK30WA383	131N0227	100%	100%	0%	0%	0%	10.00	10.00	100%	[8]	[16]	[17]	[18]	[3]	600	[0]
208/230V	12	HIGH	HD60FK658	HK30WA372	131L9797	100%	100%	0%	0%	0%	10.00	10.00	100%	[8]	[16]	[17]	[18]	[3]	600	[0]
460V	12	HIGH	HD60FK658	HK30WA379	131L9866	100%	100%	0%	0%	0%	10.00	10.00	100%	[8]	[16]	[17]	[18]	[3]	600	[0]
575V	12	HIGH	HD60FE576	HK30WA387	134F0217	100%	100%	0%	0%	0%	10.00	10.00	100%	[8]	[16]	[17]	[18]	[3]	600	[0]

Table 25 – Unit Wire/Fuse or HACR Breaker Sizing Data

UNIT	NO M. V–Ph–Hz	IFM TYPE	ELEC. HTR			NO C.O. or UNPWR C.O.								w/ PWRD C.O.							
						NO P.E.				w/ P.E. (pwrd fr/unit)				NO P.E.				w/ P.E. (pwrd fr/unit)			
			CRHEATER***A00	Nom (kW)	FLA	MCA	MAX FUSE or HACR BRKR	DISC. SIZE		MCA	MAX FUSE or HACR BRKR	DISC. SIZE		MCA	MAX FUSE or HACR BRKR	DISC. SIZE		MCA	MAX FUSE or HACR BRKR	DISC. SIZE	
								FLA	LRA			FLA	LRA			FLA	LRA			FLA	LRA
50LC–007	208/230–3–60	STD	NONE	–	–	35/34	45/45	36/35	173	38/38	50/50	40/40	177	39/39	50/50	41/41	178	43/43	50/50	45/45	182
			264A	4.9/6.5	13.6/15.6	35/34	45/45	36/35	173/173	38/38	50/50	40/40	177/177	39/39	50/50	41/41	178/178	43/43	50/50	45/45	182/182
			110A	12.0/16.0	33.4/38.5	49/56	50/60	45/51	173/173	54/60	60/60	49/55	177/177	55/62	60/70	51/56	178/178	60/66	60/70	55/61	182/182
			111A	18.6/24.8	51.7/59.7	72/82	80/90	66/75	173/173	77/87	80/90	70/79	177/177	78/88	80/90	72/81	178/178	83/93	90/100	76/85	182/182
		MED	NONE	–	–	35/34	45/45	36/35	173	38/38	50/50	40/40	177	39/39	50/50	41/41	178	43/43	50/50	45/45	182
			264A	4.9/6.5	13.6/15.6	35/34	45/45	36/35	173/173	38/38	50/50	40/40	177/177	39/39	50/50	41/41	178/178	43/43	50/50	45/45	182/182
			110A	12.0/16.0	33.4/38.5	49/56	50/60	45/51	173/173	54/60	60/60	49/55	177/177	55/62	60/70	51/56	178/178	60/66	60/70	55/61	182/182
			111A	18.6/24.8	51.7/59.7	72/82	80/90	66/75	173/173	77/87	80/90	70/79	177/177	78/88	80/90	72/81	178/178	83/93	90/100	76/85	182/182
		HIGH	NONE	–	–	37/37	50/45	39/38	203	41/40	50/50	43/42	207	42/41	50/50	44/43	208	46/45	50/50	49/48	212
			264A	4.9/6.5	13.6/15.6	37/37	50/45	39/38	203/203	41/40	50/50	43/42	207/207	42/41	50/50	44/43	208/208	46/45	50/50	49/48	212/212
			110A	12.0/16.0	33.4/38.5	53/58	60/60	48/53	203/203	58/63	60/70	53/58	207/207	59/64	60/70	54/59	208/208	64/69	70/70	58/63	212/212
			111A	18.6/24.8	51.7/59.7	76/85	80/90	69/78	203/203	81/90	90/90	74/82	207/207	82/91	90/100	75/83	208/208	87/96	90/100	79/88	212/212
	460–3–60	STD	NONE	–	–	20	25	20	87	21	25	22	89	22	25	23	89	24	25	25	91
			265A	6.0	7.2	20	25	20	87	21	25	22	89	22	25	23	89	24	25	25	91
			267A	14.0	16.8	25	25	23	87	27	30	25	89	28	30	25	89	30	30	27	91
			269A	25.5	30.7	42	45	39	87	45	45	41	89	45	45	41	89	47	50	43	91
		MED	NONE	–	–	20	25	20	87	21	25	22	89	22	25	23	89	24	25	25	91
			265A	6.0	7.2	20	25	20	87	21	25	22	89	22	25	23	89	24	25	25	91
			267A	14.0	16.8	25	25	23	87	27	30	25	89	28	30	25	89	30	30	27	91
			269A	25.5	30.7	42	45	39	87	45	45	41	89	45	45	41	89	47	50	43	91
		HIGH	NONE	–	–	20	25	21	103	22	25	23	105	23	25	24	105	24	30	26	107
			265A	6.0	7.2	20	25	21	103	22	25	23	105	23	25	24	105	24	30	26	107
			267A	14.0	16.8	26	30	24	103	28	30	26	105	29	30	26	105	31	35	28	107
			269A	25.5	30.7	44	45	40	103	46	50	42	105	46	50	42	105	49	50	44	107
	575–3–60	STD	NONE	–	–	15	20	16	67	19	20	20	71	17	20	18	69	21	25	22	73
			308A	17.0	20.4	29	30	27	67	34	35	31	71	32	35	29	69	36	40	33	73
			299A	25.7	25.8	36	40	33	67	41	45	37	71	38	40	35	69	43	45	39	73
		MED	NONE	–	–	15	20	16	67	19	20	20	71	17	20	18	69	21	25	22	73
			308A	17.0	20.4	29	30	27	67	34	35	31	71	32	35	29	69	36	40	33	73
			299A	25.7	25.8	36	40	33	67	41	45	37	71	38	40	35	69	43	45	39	73
		HIGH	NONE	–	–	17	20	18	80	21	25	22	84	19	20	20	82	23	25	24	86
			308A	17.0	20.4	32	35	29	80	36	40	33	84	34	35	31	82	38	40	35	86
			299A	25.7	25.8	38	40	35	80	43	45	39	84	40	45	37	82	45	45	41	86

See “Legend and Notes for Tables 25 and 26 ” on page 81.

Table 25 - Unit Wire/Fuse or HACR Breaker Sizing Data (cont.)

UNIT	NO M. V–Ph–HZ	IFM TYPE	ELEC. HTR			NO C.O. or UNPWR C.O.								w/ PWRD C.O.							
						NO P.E.				w/ P.E. (pwrd fr/unit)				NO P.E.				w/ P.E. (pwrd fr/unit)			
			CRHEATER***A00	Nom (kW)	FLA	MCA	MAX FUSE or HACR BRKR	DISC. SIZE		MCA	MAX FUSE or HACR BRKR	DISC. SIZE		MCA	MAX FUSE or HACR BRKR	DISC. SIZE		MCA	MAX FUSE or HACR BRKR	DISC. SIZE	
								FLA	LRA			FLA	LRA			FLA	LRA			FLA	LRA
50LC–008	208/230–3–60	STD	NONE	–	–	42/42	50/50	44/44	200	46/46	50/50	48/48	204	47/47	60/50	49/49	205	51/50	60/60	54/53	209
			288A	7.5/10.0	20.9/24.1	42/42	50/50	44/44	200/200	46/46	50/50	48/48	204/204	47/47	60/50	49/49	205/205	51/50	60/60	54/53	209/209
			291A	12.4/16.5	34.4/39.7	51/57	60/60	46/52	200/200	55/62	60/70	51/56	204/204	57/63	60/70	52/58	205/205	61/68	70/70	56/62	209/209
			294A	25.2/33.5	69.9/80.6	95/108	100/110	87/99	200/200	100/113	100/125	91/104	204/204	101/114	110/125	93/105	205/205	106/119	110/125	97/109	209/209
		MED	NONE	–	–	42/42	50/50	44/44	200	46/46	50/50	48/48	204	47/47	60/50	49/49	205	51/50	60/60	54/53	209
			288A	7.5/10.0	20.9/24.1	42/42	50/50	44/44	200/200	46/46	50/50	48/48	204/204	47/47	60/50	49/49	205/205	51/50	60/60	54/53	209/209
			291A	12.4/16.5	34.4/39.7	51/57	60/60	46/52	200/200	55/62	60/70	51/56	204/204	57/63	60/70	52/58	205/205	61/68	70/70	56/62	209/209
			294A	25.2/33.5	69.9/80.6	95/108	100/110	87/99	200/200	100/113	100/125	91/104	204/204	101/114	110/125	93/105	205/205	106/119	110/125	97/109	209/209
		HIGH	NONE	–	–	45/44	50/50	47/46	230	49/48	60/60	51/50	234	50/49	60/60	53/52	235	53/53	60/60	57/56	239
			288A	7.5/10.0	20.9/24.1	45/44	50/50	47/46	230/230	49/48	60/60	51/50	234/234	50/49	60/60	53/52	235/235	53/53	60/60	57/56	239/239
			291A	12.4/16.5	34.4/39.7	54/60	60/60	49/55	230/230	59/65	60/70	54/59	234/234	60/66	60/70	55/60	235/235	65/71	70/80	59/65	239/239
			294A	25.2/33.5	69.9/80.6	99/111	100/125	90/102	230/230	103/116	110/125	95/106	234/234	105/117	110/125	96/107	235/235	109/122	110/125	100/112	239/239
		ULTRA	NONE	–	–	47/46	60/50	50/48	254	51/50	60/60	54/53	258	52/51	60/60	55/54	259	56/55	60/60	59/58	263
			288A	7.5/10.0	20.9/24.1	47/46	60/50	50/48	254/254	51/50	60/60	54/53	258/258	52/51	60/60	55/54	259/259	56/55	60/60	59/58	263/263
			291A	12.4/16.5	34.4/39.7	57/62	60/70	52/57	254/254	62/67	70/70	56/61	258/258	63/68	70/70	58/62	259/259	68/73	70/80	62/67	263/263
			294A	25.2/33.5	69.9/80.6	101/113	110/125	93/104	254/254	106/118	110/125	97/108	258/258	107/119	110/125	98/109	259/259	112/124	125/125	103/114	263/263
	460–3–60	STD	NONE	–	–	23	25	24	102	24	30	26	104	25	30	26	104	27	30	28	106
			289A	10.0	12.0	23	25	24	102	24	30	26	104	25	30	26	104	27	30	28	106
			292A	16.5	19.9	29	30	26	102	31	35	28	104	32	35	29	104	34	35	31	106
			295A	33.5	40.3	54	60	50	102	57	60	52	104	57	60	52	104	59	60	54	106
		MED	NONE	–	–	23	25	24	102	24	30	26	104	25	30	26	104	27	30	28	106
			289A	10.0	12.0	23	25	24	102	24	30	26	104	25	30	26	104	27	30	28	106
			292A	16.5	19.9	29	30	26	102	31	35	28	104	32	35	29	104	34	35	31	106
			295A	33.5	40.3	54	60	50	102	57	60	52	104	57	60	52	104	59	60	54	106
		HIGH	NONE	–	–	23	25	25	118	25	30	27	120	26	30	27	120	27	30	29	122
			289A	10.0	12.0	23	25	25	118	25	30	27	120	26	30	27	120	27	30	29	122
			292A	16.5	19.9	30	30	27	118	32	35	29	120	33	35	30	120	35	35	32	122
			295A	33.5	40.3	56	60	51	118	58	60	53	120	58	60	53	120	61	70	55	122
		ULTRA	NONE	–	–	25	30	26	130	26	30	28	132	27	30	28	132	29	30	30	134
			289A	10.0	12.0	25	30	26	130	26	30	28	132	27	30	28	132	29	30	30	134
			292A	16.5	19.9	31	35	29	130	34	35	31	132	34	35	31	132	36	40	33	134
			295A	33.5	40.3	57	60	52	130	59	60	54	132	60	60	55	132	62	70	57	134
	575–3–60	STD	NONE	–	–	19	20	20	78	23	25	24	82	21	25	22	80	24	30	26	84
			293A	16.5	15.9	24	25	22	78	29	30	26	82	26	30	23	80	31	35	28	84
			296A	33.5	32.2	44	45	40	78	49	50	45	82	46	50	42	80	51	60	47	84
		MED	NONE	–	–	19	20	20	78	23	25	24	82	21	25	22	80	24	30	26	84
			293A	16.5	15.9	24	25	22	78	29	30	26	82	26	30	23	80	31	35	28	84
			296A	33.5	32.2	44	45	40	78	49	50	45	82	46	50	42	80	51	60	47	84
		HIGH	NONE	–	–	21	25	22	91	24	30	26	95	22	25	24	93	26	30	28	97
			293A	16.5	15.9	26	30	23	91	31	35	28	95	28	30	25	93	33	35	30	97
			296A	33.5	32.2	46	50	42	91	51	60	47	95	48	50	44	93	53	60	49	97
		ULTRA	NONE	–	–	21	25	22	91	24	30	26	95	22	25	24	93	26	30	28	97
			293A	16.5	15.9	26	30	23	91	31	35	28	95	28	30	25	93	33	35	30	97
			296A	33.5	32.2	46	50	42	91	51	60	47	95	48	50	44	93	53	60	49	97

See “Legend and Notes for Tables 25 and 26” on page 81.

Table 25 - Unit Wire/Fuse or HACR Breaker Sizing Data (cont.)

UNIT	NO M. V–Ph–HZ	IFM TYPE	ELEC. HTR			NO C.O. or UNPWR C.O.								w/ PWRD C.O.							
						NO P.E.				w/ P.E. (pwrd fr/unit)				NO P.E.				w/ P.E. (pwrd fr/unit)			
			CRHEATER***A00	Nom (kW)	FLA	MCA	MAX FUSE or HACR BRKR	DISC. SIZE		MCA	MAX FUSE or HACR BRKR	DISC. SIZE		MCA	MAX FUSE or HACR BRKR	DISC. SIZE		MCA	MAX FUSE or HACR BRKR	DISC. SIZE	
								FLA	LRA			FLA	LRA			FLA	LRA			FLA	LRA
50LC–009	208/230–3–60	STD	NONE	–	–	45/45	60/50	46/46	227	49/48	60/60	51/50	231	50/49	60/60	52/52	232	53/53	60/60	56/56	236
			288A	7.5/10.0	20.9/24.1	45/45	60/50	46/46	227/227	49/48	60/60	51/50	231/231	50/49	60/60	52/52	232/232	53/53	60/60	56/56	236/236
			291A	12.4/16.5	34.4/39.7	51/57	60/60	46/52	227/227	55/62	60/70	51/56	231/231	57/63	60/70	52/58	232/232	61/68	70/70	56/62	236/236
			294A	25.2/33.5	69.9/80.6	95/108	100/110	87/99	227/227	100/113	100/125	91/104	231/231	101/114	110/125	93/105	232/232	106/119	110/125	97/109	236/236
		MED	NONE	–	–	45/45	60/50	46/46	227	49/48	60/60	51/50	231	50/49	60/60	52/52	232	53/53	60/60	56/56	236
			288A	7.5/10.0	20.9/24.1	45/45	60/50	46/46	227/227	49/48	60/60	51/50	231/231	50/49	60/60	52/52	232/232	53/53	60/60	56/56	236/236
			291A	12.4/16.5	34.4/39.7	51/57	60/60	46/52	227/227	55/62	60/70	51/56	231/231	57/63	60/70	52/58	232/232	61/68	70/70	56/62	236/236
			294A	25.2/33.5	69.9/80.6	95/108	100/110	87/99	227/227	100/113	100/125	91/104	231/231	101/114	110/125	93/105	232/232	106/119	110/125	97/109	236/236
		HIGH	NONE	–	–	50/49	60/60	52/51	281	54/53	60/60	56/55	285	55/54	60/60	58/56	286	58/57	70/70	62/61	290
			288A	7.5/10.0	20.9/24.1	50/49	60/60	52/51	281/281	54/53	60/60	56/55	285/285	55/54	60/60	58/56	286/286	58/57	70/70	62/61	290/290
			291A	12.4/16.5	34.4/39.7	57/62	60/70	52/57	281/281	62/67	70/70	56/61	285/285	63/68	70/70	58/62	286/286	68/73	70/80	62/67	290/290
			294A	25.2/33.5	69.9/80.6	101/113	110/125	93/104	281/281	106/118	110/125	97/108	285/285	107/119	110/125	98/109	286/286	112/124	125/125	103/114	290/290
		ULTRA	NONE	–	–	53/52	60/60	55/54	292	56/55	60/60	60/59	296	57/56	70/60	61/60	297	61/60	70/70	65/64	301
			288A	7.5/10.0	20.9/24.1	53/52	60/60	55/54	292/292	56/55	60/60	60/59	296/296	57/56	70/60	61/60	297/297	61/60	70/70	65/64	301/301
			291A	12.4/16.5	34.4/39.7	60/66	60/70	55/60	292/292	65/71	70/80	60/65	296/296	66/72	70/80	61/66	297/297	71/77	80/80	65/70	301/301
			294A	25.2/33.5	69.9/80.6	105/117	110/125	96/107	292/292	110/122	110/125	100/112	296/296	111/123	125/125	102/113	297/297	116/128	125/150	106/117	301/301
	460–3–60	STD	NONE	–	–	24	30	25	113	26	30	27	115	27	30	28	115	28	30	30	117
			289A	10.0	12.0	24	30	25	113	26	30	27	115	27	30	28	115	28	30	30	117
			292A	16.5	19.9	29	30	26	113	31	35	28	115	32	35	29	115	34	35	31	117
			295A	33.5	40.3	54	60	50	113	57	60	52	115	57	60	52	115	59	60	54	117
		MED	NONE	–	–	24	30	25	113	26	30	27	115	27	30	28	115	28	30	30	117
			289A	10.0	12.0	24	30	25	113	26	30	27	115	27	30	28	115	28	30	30	117
			292A	16.5	19.9	29	30	26	113	31	35	28	115	32	35	29	115	34	35	31	117
			295A	33.5	40.3	54	60	50	113	57	60	52	115	57	60	52	115	59	60	54	117
		HIGH	NONE	–	–	26	30	28	141	28	30	30	143	29	35	30	143	30	35	32	145
			289A	10.0	12.0	26	30	28	141	28	30	30	143	29	35	30	143	30	35	32	145
			292A	16.5	19.9	31	35	29	141	34	35	31	143	34	35	31	143	36	40	33	145
			295A	33.5	40.3	57	60	52	141	59	60	54	143	60	60	55	143	62	70	57	145
		ULTRA	NONE	–	–	28	30	29	146	30	35	31	148	30	35	32	148	32	35	34	150
			289A	10.0	12.0	28	30	29	146	30	35	31	148	30	35	32	148	32	35	34	150
			292A	16.5	19.9	33	35	30	146	36	40	32	148	36	40	33	148	38	40	35	150
			295A	33.5	40.3	59	60	54	146	61	70	56	148	62	70	56	148	64	70	58	150
	575–3–60	STD	NONE	–	–	20	25	21	84	24	25	25	88	22	25	23	86	25	30	27	90
			293A	16.5	15.9	24	25	22	84	29	30	26	88	26	30	23	86	31	35	28	90
			296A	33.5	32.2	44	45	40	84	49	50	45	88	46	50	42	86	51	60	47	90
		MED	NONE	–	–	20	25	21	84	24	25	25	88	22	25	23	86	25	30	27	90
			293A	16.5	15.9	24	25	22	84	29	30	26	88	26	30	23	86	31	35	28	90
			296A	33.5	32.2	44	45	40	84	49	50	45	88	46	50	42	86	51	60	47	90
		HIGH	NONE	–	–	22	25	23	97	25	30	27	101	23	25	25	99	27	30	29	103
			293A	16.5	15.9	26	30	23	97	31	35	28	101	28	30	25	99	33	35	30	103
			296A	33.5	32.2	46	50	42	97	51	60	47	101	48	50	44	99	53	60	49	103
		ULTRA	NONE	–	–	24	25	25	111	27	30	29	115	25	30	27	113	29	35	31	117
			293A	16.5	15.9	28	30	25	111	33	35	30	115	30	30	27	113	35	35	32	117
			296A	33.5	32.2	48	50	44	111	53	60	49	115	51	60	46	113	55	60	50	117

See “Legend and Notes for Tables 25 and 26” on page 81.

Table 25 - Unit Wire/Fuse or HACR Breaker Sizing Data (cont.)

UNIT	NO M. V–Ph–HZ	IFM TYPE	ELEC. HTR			NO C.O. or UNPWR C.O.								w/ PWRD C.O.							
						NO P.E.				w/ P.E. (pwrd fr/unit)				NO P.E.				w/ P.E. (pwrd fr/unit)			
			CRHEATER***A00	Nom (kW)	FLA	MCA	MAX FUSE or HACR BRKR	DISC. SIZE		MCA	MAX FUSE or HACR BRKR	DISC. SIZE		MCA	MAX FUSE or HACR BRKR	DISC. SIZE		MCA	MAX FUSE or HACR BRKR	DISC. SIZE	
								FLA	LRA			FLA	LRA			FLA	LRA			FLA	LRA
50LC–012	208/230–3–60	STD	NONE	–	–	51/50	60/60	52/52	252	54/54	60/60	56/56	256	55/55	60/60	58/57	257	59/59	70/70	62/62	261
			288A	7.5/10.0	20.9/24.1	51/50	60/60	52/52	252/252	54/54	60/60	56/56	256/256	55/55	60/60	58/57	257/257	59/59	70/70	62/62	261/261
			291A	12.4/16.5	34.4/39.7	52/59	60/60	52/53	252/252	57/63	60/70	56/58	256/256	58/65	60/70	58/59	257/257	63/69	70/70	62/63	261/261
			294A	25.2/33.5	69.9/80.6	97/110	100/110	89/101	252/252	101/114	110/125	93/105	256/256	103/116	110/125	94/106	257/257	107/120	110/125	98/110	261/261
			291A+294A	37.6/50.0	104.3/120.3	140/129	150/150	128/146	252/252	144/134	150/150	132/151	256/256	146/135	150/150	134/152	257/257	150/140	175/150	138/156	261/261
		MED	NONE	–	–	52/51	60/60	54/53	278	56/55	70/60	58/57	282	57/56	70/70	59/58	283	61/60	70/70	64/63	287
			288A	7.5/10.0	20.9/24.1	52/51	60/60	54/53	278/278	56/55	70/60	58/57	282/282	57/56	70/70	59/58	283/283	61/60	70/70	64/63	287/287
			291A	12.4/16.5	34.4/39.7	54/60	60/60	54/55	278/278	59/65	70/70	58/59	282/282	60/66	70/70	59/60	283/283	65/71	70/80	64/65	287/287
			294A	25.2/33.5	69.9/80.6	99/111	100/125	90/102	278/278	103/116	110/125	95/106	282/282	105/117	110/125	96/107	283/283	109/122	110/125	100/112	287/287
			291A+294A	37.6/50.0	104.3/120.3	142/131	150/150	130/147	278/278	146/135	150/150	134/152	282/282	148/137	150/150	135/153	283/283	152/141	175/150	140/157	287/287
		HIGH	NONE	–	–	57/56	70/70	59/58	313	61/60	80/70	64/63	317	62/61	80/80	65/64	318	66/65	80/80	69/68	322
			288A	7.5/10.0	20.9/24.1	57/56	70/70	59/58	313/313	61/60	80/70	64/63	317/317	62/61	80/80	65/64	318/318	66/65	80/80	69/68	322/322
			291A	12.4/16.5	34.4/39.7	60/66	70/70	59/60	313/313	65/71	80/80	64/65	317/317	66/72	80/80	65/66	318/318	71/77	80/80	69/70	322/322
			294A	25.2/33.5	69.9/80.6	105/117	110/125	96/107	313/313	110/122	110/125	100/112	317/317	111/123	125/125	102/113	318/318	116/128	125/150	106/117	322/322
			291A+294A	37.6/50.0	104.3/120.3	148/137	150/150	136/153	313/313	153/141	175/175	140/157	317/317	154/143	175/175	141/158	318/318	159/147	175/175	145/163	322/322
	460–3–60	STD	NONE	–	–	26	30	27	126	28	30	29	128	28	30	30	128	30	35	32	130
			289A	10.0	12.0	26	30	27	126	28	30	29	128	28	30	30	128	30	35	32	130
			292A	16.5	19.9	30	30	27	126	32	35	29	128	33	35	30	128	35	35	32	130
			295A	33.5	40.3	56	60	51	126	58	60	53	128	58	60	53	128	61	70	55	130
			292A+295A	50.0	60.2	65	70	74	126	68	80	76	128	68	80	76	128	70	80	78	130
		MED	NONE	–	–	26	30	27	140	28	30	29	142	28	30	30	142	30	35	32	144
			289A	10.0	12.0	26	30	27	140	28	30	29	142	28	30	30	142	30	35	32	144
			292A	16.5	19.9	30	30	27	140	32	35	29	142	33	35	30	142	35	35	32	144
			295A	33.5	40.3	56	60	51	140	58	60	53	142	58	60	53	142	61	70	55	144
			292A+295A	50.0	60.2	65	70	74	140	68	80	76	142	68	80	76	142	70	80	78	144
		HIGH	NONE	–	–	29	35	30	157	30	35	32	159	31	35	33	159	33	40	35	161
			289A	10.0	12.0	29	35	30	157	30	35	32	159	31	35	33	159	33	40	35	161
			292A	16.5	19.9	33	35	30	157	36	40	32	159	36	40	33	159	38	40	35	161
			295A	33.5	40.3	59	60	54	157	61	70	56	159	62	70	56	159	64	70	58	161
			292A+295A	50.0	60.2	69	80	77	157	71	80	79	159	71	80	79	159	74	80	81	161
	575–3–60	STD	NONE	–	–	22	25	23	107	26	30	27	111	24	25	25	109	28	30	29	113
			293A	16.5	15.9	25	25	23	107	29	30	27	111	27	30	25	109	32	35	29	113
			296A	33.5	32.2	45	45	41	107	50	50	45	111	47	50	43	109	52	60	47	113
			293A+296A	50.0	48.1	53	60	59	107	58	60	64	111	55	60	61	109	60	60	66	113
		MED	NONE	–	–	23	25	24	116	27	30	28	120	25	30	26	118	29	30	30	122
			293A	16.5	15.9	26	30	24	116	31	35	28	120	28	30	26	118	33	35	30	122
			296A	33.5	32.2	46	50	42	116	51	60	47	120	48	50	44	118	53	60	49	122
			293A+296A	50.0	48.1	54	60	60	116	59	60	65	120	56	60	62	118	61	70	67	122
		HIGH	NONE	–	–	25	30	26	130	29	30	30	134	26	30	28	132	30	35	32	136
			293A	16.5	15.9	28	30	26	130	33	35	30	134	30	30	28	132	35	35	32	136
			296A	33.5	32.2	48	50	44	130	53	60	49	134	51	60	46	132	55	60	50	136
			293A+296A	50.0	48.1	56	60	62	130	61	70	67	134	58	60	64	132	63	70	69	136

See “Legend and Notes for Tables 25 and 26” on page 81.

Table 26 – Unit Wire Sizing Data with Factory Installed HACR Breaker

UNIT	NO M. V–Ph–Hz	IFM TYPE	ELEC. HTR			NO C.O. or UNPWR C.O.								w/ PWRD C.O.							
						NO P.E.				w/ P.E. (pwrd fr/unit)				NO P.E.				w/ P.E. (pwrd fr/unit)			
			CRHEATER***A00	Nom (kW)	FLA	MCA	HACR BRKR	DISC. SIZE		MCA	HACR BRKR	DISC. SIZE		MCA	HACR BRKR	DISC. SIZE		MCA	HACR BRKR	DISC. SIZE	
								FLA	LRA			FLA	LRA			FLA	LRA			FLA	LRA
50LC–007	208/230–3–60	STD	NONE	–	–	35/35	45/45	36/35	173	38/38	50/50	40/40	177	39/39	50/50	41/41	178	43/43	50/50	45/45	182
			264A	4.9/6.5	13.6/15.6	35/35	45/45	36/35	173/173	38/38	50/50	40/40	177/177	39/39	50/50	41/41	178/178	43/43	50/50	45/45	182/182
			110A	12.0/16.0	33.4/38.5	56/56	60/60	45/51	173/173	60/60	60/60	49/55	177/177	62/62	70/70	51/56	178/178	66/66	70/70	55/61	182/182
			111A	18.6/24.8	51.7/59.7	82/82	90/90	66/75	173/173	87/87	90/90	70/79	177/177	88/88	90/90	72/81	178/178	93/93	100/100	76/85	182/182
		MED	NONE	–	–	35/35	45/45	36/35	173	38/38	50/50	40/40	177	39/39	50/50	41/41	178	43/43	50/50	45/45	182
			264A	4.9/6.5	13.6/15.6	35/35	45/45	36/35	173/173	38/38	50/50	40/40	177/177	39/39	50/50	41/41	178/178	43/43	50/50	45/45	182/182
			110A	12.0/16.0	33.4/38.5	56/56	60/60	45/51	173/173	60/60	60/60	49/55	177/177	62/62	70/70	51/56	178/178	66/66	70/70	55/61	182/182
			111A	18.6/24.8	51.7/59.7	82/82	90/90	66/75	173/173	87/87	90/90	70/79	177/177	88/88	90/90	72/81	178/178	93/93	100/100	76/85	182/182
		HIGH	NONE	–	–	37/37	50/50	39/38	203	41/41	50/50	43/42	207	42/42	50/50	44/43	208	46/46	50/50	49/48	212
			264A	4.9/6.5	13.6/15.6	37/37	50/50	39/38	203/203	41/41	50/50	43/42	207/207	42/42	50/50	44/43	208/208	46/46	50/50	49/48	212/212
			110A	12.0/16.0	33.4/38.5	58/58	60/60	48/53	203/203	63/63	70/70	53/58	207/207	64/64	70/70	54/59	208/208	69/69	70/70	58/63	212/212
			111A	18.6/24.8	51.7/59.7	85/85	90/90	69/78	203/203	90/90	90/90	74/82	207/207	91/91	100/100	75/83	208/208	96/96	100/100	79/88	212/212
	460–3–60	STD	NONE	–	–	20	25	20	87	21	25	22	89	22	25	23	89	24	25	25	91
			265A	6.0	7.2	20	25	20	87	21	25	22	89	22	25	23	89	24	25	25	91
			267A	14.0	16.8	25	25	23	87	27	30	25	89	28	30	25	89	30	30	27	91
			269A	25.5	30.7	42	45	39	87	45	45	41	89	45	45	41	89	47	50	43	91
		MED	NONE	–	–	20	25	20	87	21	25	22	89	22	25	23	89	24	25	25	91
			265A	6.0	7.2	20	25	20	87	21	25	22	89	22	25	23	89	24	25	25	91
			267A	14.0	16.8	25	25	23	87	27	30	25	89	28	30	25	89	30	30	27	91
			269A	25.5	30.7	42	45	39	87	45	45	41	89	45	45	41	89	47	50	43	91
		HIGH	NONE	–	–	20	25	21	103	22	25	23	105	23	25	24	105	24	30	26	107
			265A	6.0	7.2	20	25	21	103	22	25	23	105	23	25	24	105	24	30	26	107
			267A	14.0	16.8	26	30	24	103	28	30	26	105	29	30	26	105	31	35	28	107
			269A	25.5	30.7	44	45	40	103	46	50	42	105	46	50	42	105	49	50	44	107
	575–3–60	STD	NONE	–	–	15	20	16	67	19	20	20	71	17	20	18	69	21	25	22	73
			308A	17.0	20.4	29	30	27	67	34	35	31	71	32	35	29	69	36	40	33	73
			299A	25.7	25.8	36	40	33	67	41	45	37	71	38	40	35	69	43	45	39	73
		MED	NONE	–	–	15	20	16	67	19	20	20	71	17	20	18	69	21	25	22	73
			308A	17.0	20.4	29	30	27	67	34	35	31	71	32	35	29	69	36	40	33	73
			299A	25.7	25.8	36	40	33	67	41	45	37	71	38	40	35	69	43	45	39	73
		HIGH	NONE	–	–	17	20	18	80	21	25	22	84	19	20	20	82	23	25	24	86
			308A	17.0	20.4	32	35	29	80	36	40	33	84	34	35	31	82	38	40	35	86
			299A	25.7	25.8	38	40	35	80	43	45	39	84	40	45	37	82	45	45	41	86

See “Legend and Notes for Tables 25 and 26 ” on page 81.

Table 26 - Unit Wire Sizing Data with Factory Installed HACR Breaker (cont)

UNIT	NO M. V–Ph–HZ	IFM TYPE	ELEC. HTR			NO C.O. or UNPWR C.O.								w/ PWRD C.O.							
						NO P.E.				w/ P.E. (pwrd fr/unit)				NO P.E.				w/ P.E. (pwrd fr/unit)			
			CRHEATER***A00	Nom (kW)	FLA	MCA	HACR BRKR	DISC. SIZE		MCA	HACR BRKR	DISC. SIZE		MCA	HACR BRKR	DISC. SIZE		MCA	HACR BRKR	DISC. SIZE	
								FLA	LRA			FLA	LRA			FLA	LRA			FLA	LRA
50LC–008	208/230–3–60	STD	NONE	–	–	42/42	50/50	44/44	200	46/46	50/50	48/48	204	47/47	60/60	49/49	205	51/51	60/60	54/53	209
			288A	7.5/10.0	20.9/24.1	42/42	50/50	44/44	200/200	46/46	50/50	48/48	204/204	47/47	60/60	49/49	205/205	51/51	60/60	54/53	209/209
			291A	12.4/16.5	34.4/39.7	57/57	60/60	46/52	200/200	62/62	70/70	51/56	204/204	63/63	70/70	52/58	205/205	68/68	70/70	56/62	209/209
			294A	25.2/33.5	69.9/80.6	108/108	110/110	87/99	200/200	113/113	125/125	91/104	204/204	114/114	125/125	93/105	205/205	119/119	125/125	97/109	209/209
		MED	NONE	–	–	42/42	50/50	44/44	200	46/46	50/50	48/48	204	47/47	60/60	49/49	205	51/51	60/60	54/53	209
			288A	7.5/10.0	20.9/24.1	42/42	50/50	44/44	200/200	46/46	50/50	48/48	204/204	47/47	60/60	49/49	205/205	51/51	60/60	54/53	209/209
			291A	12.4/16.5	34.4/39.7	57/57	60/60	46/52	200/200	62/62	70/70	51/56	204/204	63/63	70/70	52/58	205/205	68/68	70/70	56/62	209/209
			294A	25.2/33.5	69.9/80.6	108/108	110/110	87/99	200/200	113/113	125/125	91/104	204/204	114/114	125/125	93/105	205/205	119/119	125/125	97/109	209/209
		HIGH	NONE	–	–	45/45	50/50	47/46	230	49/49	60/60	51/50	234	50/50	60/60	53/52	235	53/53	60/60	57/56	239
			288A	7.5/10.0	20.9/24.1	45/45	50/50	47/46	230/230	49/49	60/60	51/50	234/234	50/50	60/60	53/52	235/235	53/53	60/60	57/56	239/239
			291A	12.4/16.5	34.4/39.7	60/60	60/60	49/55	230/230	65/65	70/70	54/59	234/234	66/66	70/70	55/60	235/235	71/71	80/80	59/65	239/239
			294A	25.2/33.5	69.9/80.6	111/111	125/125	90/102	230/230	116/116	125/125	95/106	234/234	117/117	125/125	96/107	235/235	122/122	125/125	100/112	239/239
		ULTRA	NONE	–	–	47/47	60/60	50/48	254	51/51	60/60	54/53	258	52/52	60/60	55/54	259	56/56	60/60	59/58	263
			288A	7.5/10.0	20.9/24.1	47/47	60/60	50/48	254/254	51/51	60/60	54/53	258/258	52/52	60/60	55/54	259/259	56/56	60/60	59/58	263/263
			291A	12.4/16.5	34.4/39.7	62/62	70/70	52/57	254/254	67/67	70/70	56/61	258/258	68/68	70/70	58/62	259/259	73/73	80/80	62/67	263/263
			294A	25.2/33.5	69.9/80.6	113/113	125/125	93/104	254/254	118/118	125/125	97/108	258/258	119/119	125/125	98/109	259/259	124/124	125/125	103/114	263/263
	460–3–60	STD	NONE	–	–	23	25	24	102	24	30	26	104	25	30	26	104	27	30	28	106
			289A	10.0	12.0	23	25	24	102	24	30	26	104	25	30	26	104	27	30	28	106
			292A	16.5	19.9	29	30	26	102	31	35	28	104	32	35	29	104	34	35	31	106
			295A	33.5	40.3	54	60	50	102	57	60	52	104	57	60	52	104	59	60	54	106
		MED	NONE	–	–	23	25	24	102	24	30	26	104	25	30	26	104	27	30	28	106
			289A	10.0	12.0	23	25	24	102	24	30	26	104	25	30	26	104	27	30	28	106
			292A	16.5	19.9	29	30	26	102	31	35	28	104	32	35	29	104	34	35	31	106
			295A	33.5	40.3	54	60	50	102	57	60	52	104	57	60	52	104	59	60	54	106
		HIGH	NONE	–	–	23	25	25	118	25	30	27	120	26	30	27	120	27	30	29	122
			289A	10.0	12.0	23	25	25	118	25	30	27	120	26	30	27	120	27	30	29	122
			292A	16.5	19.9	30	30	27	118	32	35	29	120	33	35	30	120	35	35	32	122
			295A	33.5	40.3	56	60	51	118	58	60	53	120	58	60	53	120	61	70	55	122
		ULTRA	NONE	–	–	25	30	26	130	26	30	28	132	27	30	28	132	29	30	30	134
			289A	10.0	12.0	25	30	26	130	26	30	28	132	27	30	28	132	29	30	30	134
			292A	16.5	19.9	31	35	29	130	34	35	31	132	34	35	31	132	36	40	33	134
			295A	33.5	40.3	57	60	52	130	59	60	54	132	60	60	55	132	62	70	57	134
	575–3–60	STD	NONE	–	–	19	20	20	78	23	25	24	82	21	25	22	80	24	30	26	84
			293A	16.5	15.9	24	25	22	78	29	30	26	82	26	30	23	80	31	35	28	84
			296A	33.5	32.2	44	45	40	78	49	50	45	82	46	50	42	80	51	60	47	84
		MED	NONE	–	–	19	20	20	78	23	25	24	82	21	25	22	80	24	30	26	84
			293A	16.5	15.9	24	25	22	78	29	30	26	82	26	30	23	80	31	35	28	84
			296A	33.5	32.2	44	45	40	78	49	50	45	82	46	50	42	80	51	60	47	84
		HIGH	NONE	–	–	21	25	22	91	24	30	26	95	22	25	24	93	26	30	28	97
			293A	16.5	15.9	26	30	23	91	31	35	28	95	28	30	25	93	33	35	30	97
			296A	33.5	32.2	46	50	42	91	51	60	47	95	48	50	44	93	53	60	49	97
		ULTRA	NONE	–	–	21	25	22	91	24	30	26	95	22	25	24	93	26	30	28	97
			293A	16.5	15.9	26	30	23	91	31	35	28	95	28	30	25	93	33	35	30	97
			296A	33.5	32.2	46	50	42	91	51	60	47	95	48	50	44	93	53	60	49	97

See “Legend and Notes for Tables 25 and 26” on page 81.

Table 26 - Unit Wire Sizing Data with Factory Installed HACR Breaker (cont)

UNIT	NO M. V–Ph–HZ	IFM TYPE	ELEC. HTR			NO C.O. or UNPWR C.O.								w/ PWRD C.O.							
						NO P.E.				w/ P.E. (pwrd fr/unit)				NO P.E.				w/ P.E. (pwrd fr/unit)			
			CRHEATER***A00	Nom (kW)	FLA	MCA	HACR BRKR	DISC. SIZE		MCA	HACR BRKR	DISC. SIZE		MCA	HACR BRKR	DISC. SIZE		MCA	HACR BRKR	DISC. SIZE	
								FLA	LRA			FLA	LRA			FLA	LRA			FLA	LRA
50LC–009	208/230–3–60	STD	NONE	–	–	45/45	60/60	46/46	227	49/49	60/60	51/50	231	50/50	60/60	52/52	232	53/53	60/60	56/56	236
			288A	7.5/10.0	20.9/24.1	45/45	60/60	46/46	227/227	49/49	60/60	51/50	231/231	50/50	60/60	52/52	232/232	53/53	60/60	56/56	236/236
			291A	12.4/16.5	34.4/39.7	57/57	60/60	46/52	227/227	62/62	70/70	51/56	231/231	63/63	70/70	52/58	232/232	68/68	70/70	56/62	236/236
			294A	25.2/33.5	69.9/80.6	108/108	110/110	87/99	227/227	113/113	125/125	91/104	231/231	114/114	125/125	93/105	232/232	119/119	125/125	97/109	236/236
		MED	NONE	–	–	45/45	60/60	46/46	227	49/49	60/60	51/50	231	50/50	60/60	52/52	232	53/53	60/60	56/56	236
			288A	7.5/10.0	20.9/24.1	45/45	60/60	46/46	227/227	49/49	60/60	51/50	231/231	50/50	60/60	52/52	232/232	53/53	60/60	56/56	236/236
			291A	12.4/16.5	34.4/39.7	57/57	60/60	46/52	227/227	62/62	70/70	51/56	231/231	63/63	70/70	52/58	232/232	68/68	70/70	56/62	236/236
			294A	25.2/33.5	69.9/80.6	108/108	110/110	87/99	227/227	113/113	125/125	91/104	231/231	114/114	125/125	93/105	232/232	119/119	125/125	97/109	236/236
		HIGH	NONE	–	–	50/50	60/60	52/51	281	54/54	60/60	56/55	285	55/55	60/60	58/56	286	58/58	70/70	62/61	290
			288A	7.5/10.0	20.9/24.1	50/50	60/60	52/51	281/281	54/54	60/60	56/55	285/285	55/55	60/60	58/56	286/286	58/58	70/70	62/61	290/290
			291A	12.4/16.5	34.4/39.7	62/62	70/70	52/57	281/281	67/67	70/70	56/61	285/285	68/68	70/70	58/62	286/286	73/73	80/80	62/67	290/290
			294A	25.2/33.5	69.9/80.6	113/113	125/125	93/104	281/281	118/118	125/125	97/108	285/285	119/119	125/125	98/109	286/286	124/124	125/125	103/114	290/290
		ULTRA	NONE	–	–	53/53	60/60	55/54	292	56/56	60/60	60/59	296	57/57	70/70	61/60	297	61/61	70/70	65/64	301
			288A	7.5/10.0	20.9/24.1	53/53	60/60	55/54	292/292	56/56	60/60	60/59	296/296	57/57	70/70	61/60	297/297	61/61	70/70	65/64	301/301
			291A	12.4/16.5	34.4/39.7	66/66	70/70	55/60	292/292	71/71	80/80	60/65	296/296	72/72	80/80	61/66	297/297	77/77	80/80	65/70	301/301
			294A	25.2/33.5	69.9/80.6	117/117	125/125	96/107	292/292	122/122	125/125	100/112	296/296	123/123	125/125	102/113	297/297	128/128	150/150	106/117	301/301
	460–3–60	STD	NONE	–	–	24	30	25	113	26	30	27	115	27	30	28	115	28	30	30	117
			289A	10.0	12.0	24	30	25	113	26	30	27	115	27	30	28	115	28	30	30	117
			292A	16.5	19.9	29	30	26	113	31	35	28	115	32	35	29	115	34	35	31	117
			295A	33.5	40.3	54	60	50	113	57	60	52	115	57	60	52	115	59	60	54	117
		MED	NONE	–	–	24	30	25	113	26	30	27	115	27	30	28	115	28	30	30	117
			289A	10.0	12.0	24	30	25	113	26	30	27	115	27	30	28	115	28	30	30	117
			292A	16.5	19.9	29	30	26	113	31	35	28	115	32	35	29	115	34	35	31	117
			295A	33.5	40.3	54	60	50	113	57	60	52	115	57	60	52	115	59	60	54	117
		HIGH	NONE	–	–	26	30	28	141	28	30	30	143	29	35	30	143	30	35	32	145
			289A	10.0	12.0	26	30	28	141	28	30	30	143	29	35	30	143	30	35	32	145
			292A	16.5	19.9	31	35	29	141	34	35	31	143	34	35	31	143	36	40	33	145
			295A	33.5	40.3	57	60	52	141	59	60	54	143	60	60	55	143	62	70	57	145
		ULTRA	NONE	–	–	28	30	29	146	30	35	31	148	30	35	32	148	32	35	34	150
			289A	10.0	12.0	28	30	29	146	30	35	31	148	30	35	32	148	32	35	34	150
			292A	16.5	19.9	33	35	30	146	36	40	32	148	36	40	33	148	38	40	35	150
			295A	33.5	40.3	59	60	54	146	61	70	56	148	62	70	56	148	64	70	58	150
	575–3–60	STD	NONE	–	–	20	25	21	84	24	25	25	88	22	25	23	86	25	30	27	90
			293A	16.5	15.9	24	25	22	84	29	30	26	88	26	30	23	86	31	35	28	90
			296A	33.5	32.2	44	45	40	84	49	50	45	88	46	50	42	86	51	60	47	90
		MED	NONE	–	–	20	25	21	84	24	25	25	88	22	25	23	86	25	30	27	90
			293A	16.5	15.9	24	25	22	84	29	30	26	88	26	30	23	86	31	35	28	90
			296A	33.5	32.2	44	45	40	84	49	50	45	88	46	50	42	86	51	60	47	90
		HIGH	NONE	–	–	22	25	23	97	25	30	27	101	23	25	25	99	27	30	29	103
			293A	16.5	15.9	26	30	23	97	31	35	28	101	28	30	25	99	33	35	30	103
			296A	33.5	32.2	46	50	42	97	51	60	47	101	48	50	44	99	53	60	49	103
		ULTRA	NONE	–	–	24	25	25	111	27	30	29	115	25	30	27	113	29	35	31	117
			293A	16.5	15.9	28	30	25	111	33	35	30	115	30	30	27	113	35	35	32	117
			296A	33.5	32.2	48	50	44	111	53	60	49	115	51	60	46	113	55	60	50	117

See “Legend and Notes for Tables 25 and 26” on page 81.

Table 26 - Unit Wire Sizing Data with Factory Installed HACR Breaker (cont)

UNIT	NO M. V–Ph–HZ	IFM TYPE	ELEC. HTR			NO C.O. or UNPWR C.O.								w/ PWRD C.O.							
						NO P.E.				w/ P.E. (pwrd fr/unit)				NO P.E.				w/ P.E. (pwrd fr/unit)			
			CRHEATER***A00	Nom (kW)	FLA	MCA	HACR BRKR	DISC. SIZE		MCA	HACR BRKR	DISC. SIZE		MCA	HACR BRKR	DISC. SIZE		MCA	HACR BRKR	DISC. SIZE	
								FLA	LRA			FLA	LRA			FLA	LRA			FLA	LRA
50LC–012	208/230–3–60	STD	NONE	–	–	51/51	60/60	52/52	252	54/54	60/60	56/56	256	55/55	60/60	58/57	257	59/59	70/70	62/62	261
			288A	7.5/10.0	20.9/24.1	51/51	60/60	52/52	252/252	54/54	60/60	56/56	256/256	55/55	60/60	58/57	257/257	59/59	70/70	62/62	261/261
			291A	12.4/16.5	34.4/39.7	59/59	60/60	52/53	252/252	63/63	70/70	56/58	256/256	65/65	70/70	58/59	257/257	69/69	70/70	62/63	261/261
			294A	25.2/33.5	69.9/80.6	110/110	110/110	89/101	252/252	114/114	125/125	93/105	256/256	116/116	125/125	94/106	257/257	120/120	125/125	98/110	261/261
			291A+294A	37.6/50.0	104.3/120.3	140/140	150/150	128/146	252/252	144/144	150/150	132/151	256/256	146/146	150/150	134/152	257/257	150/150	175/175	138/156	261/261
		MED	NONE	–	–	52/52	60/60	54/53	278	56/56	70/70	58/57	282	57/57	70/70	59/58	283	61/61	70/70	64/63	287
			288A	7.5/10.0	20.9/24.1	52/52	60/60	54/53	278/278	56/56	70/70	58/57	282/282	57/57	70/70	59/58	283/283	61/61	70/70	64/63	287/287
			291A	12.4/16.5	34.4/39.7	60/60	60/60	54/55	278/278	65/65	70/70	58/59	282/282	66/66	70/70	59/60	283/283	71/71	80/80	64/65	287/287
			294A	25.2/33.5	69.9/80.6	111/111	125/125	90/102	278/278	116/116	125/125	95/106	282/282	117/117	125/125	96/107	283/283	122/122	125/125	100/112	287/287
			291A+294A	37.6/50.0	104.3/120.3	142/142	150/150	130/147	278/278	146/146	150/150	134/152	282/282	148/148	150/150	135/153	283/283	152/152	175/175	140/157	287/287
		HIGH	NONE	–	–	57/57	70/70	59/58	313	61/61	80/80	64/63	317	62/62	80/80	65/64	318	66/66	80/80	69/68	322
			288A	7.5/10.0	20.9/24.1	57/57	70/70	59/58	313/313	61/61	80/80	64/63	317/317	62/62	80/80	65/64	318/318	66/66	80/80	69/68	322/322
			291A	12.4/16.5	34.4/39.7	66/66	70/70	59/60	313/313	71/71	80/80	64/65	317/317	72/72	80/80	65/66	318/318	77/77	80/80	69/70	322/322
			294A	25.2/33.5	69.9/80.6	117/117	125/125	96/107	313/313	122/122	125/125	100/112	317/317	123/123	125/125	102/113	318/318	128/128	150/150	106/117	322/322
			291A+294A	37.6/50.0	104.3/120.3	148/148	150/150	136/153	313/313	153/153	175/175	140/157	317/317	154/154	175/175	141/158	318/318	159/159	175/175	145/163	322/322
	460–3–60	STD	NONE	–	–	26	30	27	126	28	30	29	128	28	30	30	128	30	35	32	130
			289A	10.0	12.0	26	30	27	126	28	30	29	128	28	30	30	128	30	35	32	130
			292A	16.5	19.9	30	30	27	126	32	35	29	128	33	35	30	128	35	35	32	130
			295A	33.5	40.3	56	60	51	126	58	60	53	128	58	60	53	128	61	70	55	130
			292A+295A	50.0	60.2	65	70	74	126	68	80	76	128	68	80	76	128	70	80	78	130
		MED	NONE	–	–	26	30	27	140	28	30	29	142	28	30	30	142	30	35	32	144
			289A	10.0	12.0	26	30	27	140	28	30	29	142	28	30	30	142	30	35	32	144
			292A	16.5	19.9	30	30	27	140	32	35	29	142	33	35	30	142	35	35	32	144
			295A	33.5	40.3	56	60	51	140	58	60	53	142	58	60	53	142	61	70	55	144
			292A+295A	50.0	60.2	65	70	74	140	68	80	76	142	68	80	76	142	70	80	78	144
		HIGH	NONE	–	–	29	35	30	157	30	35	32	159	31	35	33	159	33	40	35	161
			289A	10.0	12.0	29	35	30	157	30	35	32	159	31	35	33	159	33	40	35	161
			292A	16.5	19.9	33	35	30	157	36	40	32	159	36	40	33	159	38	40	35	161
			295A	33.5	40.3	59	60	54	157	61	70	56	159	62	70	56	159	64	70	58	161
			292A+295A	50.0	60.2	69	80	77	157	71	80	79	159	71	80	79	159	74	80	81	161
	575–3–60	STD	NONE	–	–	22	25	23	107	26	30	27	111	24	25	25	109	28	30	29	113
			293A	16.5	15.9	25	25	23	107	29	30	27	111	27	30	25	109	32	35	29	113
			296A	33.5	32.2	45	45	41	107	50	50	45	111	47	50	43	109	52	60	47	113
			293A+296A	50.0	48.1	53	60	59	107	58	60	64	111	55	60	61	109	60	60	66	113
		MED	NONE	–	–	23	25	24	116	27	30	28	120	25	30	26	118	29	30	30	122
			293A	16.5	15.9	26	30	24	116	31	35	28	120	28	30	26	118	33	35	30	122
			296A	33.5	32.2	46	50	42	116	51	60	47	120	48	50	44	118	53	60	49	122
			293A+296A	50.0	48.1	54	60	60	116	59	60	65	120	56	60	62	118	61	70	67	122
		HIGH	NONE	–	–	25	30	26	130	29	30	30	134	26	30	28	132	30	35	32	136
			293A	16.5	15.9	28	30	26	130	33	35	30	134	30	30	28	132	35	35	32	136
			296A	33.5	32.2	48	50	44	130	53	60	49	134	51	60	46	132	55	60	50	136
			293A+296A	50.0	48.1	56	60	62	130	61	70	67	134	58	60	64	132	63	70	69	136

See “Legend and Notes for Tables 25 and 26” on page 81.

Legend and Notes for Tables 25 and 26

LEGEND:

BRKR	–	Circuit breaker
CO	–	Convenient outlet
DISC	–	Disconnect
FLA	–	Full load amps
IFM	–	Indoor fan motor
LRA	–	Locked rotor amps
MCA	–	Minimum circuit amps
PE	–	Power exhaust
PWRD CO	–	Powered convenient outlet
UNPWR CO	–	Unpowered convenient outlet

NOTES:

1. In compliance with NEC requirements for multimotor and combination load equipment (refer to NEC Articles 430 and 440), the overcurrent protective device for the unit shall be fuse or HACR breaker. Canadian units may be fuse or circuit breaker.
2. **Unbalanced 3-Phase Supply Voltage**
   Never operate a motor where a phase imbalance in supply voltage is greater than 2%. Use the following formula to determine the percentage of voltage imbalance.

$$\text{\% Voltage Imbalance} = 100 \times \frac{\text{max voltage deviation from average voltage}}{\text{average voltage}}$$

Example: Supply voltage is 230-3-60

AB = 224 v
BC = 231 v
AC = 226 v

$$\text{Average Voltage} = \frac{(224 + 231 + 226)}{3} = \frac{681}{3}$$

$$= 227$$

Determine maximum deviation from average voltage.
(AB) 227 – 224 = 3 v
(BC) 231 – 227 = 4 v
(AC) 227 – 226 = 1 v
Maximum deviation is 4 v.
Determine percent of voltage imbalance.

$$\text{\% Voltage Imbalance} = 100 \times \frac{4}{227}$$

$$= 1.76\%$$

This amount of phase imbalance is satisfactory as it is below the maximum allowable 2%.

IMPORTANT: If the supply voltage phase imbalance is more than 2%, contact your local electric utility company immediately.

PRE-START-UP

⚠ WARNING

PERSONAL INJURY HAZARD

Failure to follow this warning could result in personal injury or death.

1. Follow recognized safety practices and wear protective goggles when checking or servicing refrigerant system.
2. Do not operate compressor or provide any electric power to unit unless compressor terminal cover is in place and secured.
3. Do not remove compressor terminal cover until all electrical sources are disconnected.
4. Relieve all pressure from system before touching or disturbing anything inside terminal box if refrigerant leak is suspected around compressor terminals.
5. Never attempt to repair soldered connection while refrigerant system is under pressure.
6. Do not use torch to remove any component. System contains oil and refrigerant under pressure. To remove a component, wear protective goggles and proceed as follows:
   b. Shut off electrical power to unit.
   c. Recover refrigerant to relieve all pressure from system using both high-pressure and low pressure ports.
   d. Cut component connection tubing with tubing cutter and remove component from unit.
   e. Carefully unsweat remaining tubing stubs when necessary. Oil can ignite when exposed to torch flame.

⚠ WARNING

ELECTRICAL OPERATION HAZARD

Failure to follow this warning could result in personal injury or death.

The unit must be electrically grounded in accordance with local codes and NEC ANSI/NFPA 70 (American National Standards Institute/National Fire Protection Association.)

Proceed as follows to inspect and prepare the unit for initial start-up:

1. Remove all access panels.
2. Read and follow instructions on all WARNING, CAUTION, and INFORMATION labels attached to, or shipped with, unit.

⚠ WARNING

ELECTRICAL OPERATION HAZARD

Failure to follow this warning could result in personal injury or death.

Relieve pressure and recover all refrigerant before system repair or final unit disposal. Wear safety and gloves when handling refrigerants. Keep torches and other ignition sources away from refrigerants and oils.

3. Make the following inspections:
   a. Inspect for shipping and handling damages such as broken lines, loose parts, or disconnected wires, etc.
   b. Inspect for oil at all refrigerant tubing connections and on unit base. Detecting oil generally indicates a refrigerant leak. Leak-test all refrigerant tubing connections using electronic leak detector, halide torch, or liquid-soap solution.
   c. Inspect all field-wiring and factory-wiring connections. Be sure that connections are completed and tight. Be sure that wires are not in contact with refrigerant tubing or sharp edges.
   d. Inspect coil fins. If damaged during shipping and handling, carefully straighten fins with a fin comb.
4. Verify the following conditions:
   a. Make sure that condenser-fan blade are correctly positioned in fan orifice. See Condenser-Fan Adjustment section for more details.
   b. Make sure that air filter(s) is in place.
   c. Make sure that condensate drain trap is filled with water to ensure proper drainage.
   d. Make sure that all tools and miscellaneous loose parts have been removed.

START-UP, GENERAL

Unit Preparation

Make sure that unit has been installed in accordance with installation instructions and applicable codes.

Return-Air Filters

Make sure correct filters are installed in unit (see Appendix II - Physical Data). Do not operate unit without return-air filters.

Outdoor-Air Inlet Screens

Outdoor-air inlet screen must be in place before operating unit.

Compressor Mounting

Compressors are internally spring mounted. Do not loosen or remove compressor hold down bolts.

Internal Wiring

Check all electrical connections in unit control boxes. Tighten as required.

Refrigerant Service Ports

Each unit system has two 1/4" SAE flare (with check valves) service ports: one on the suction line, and one on the compressor discharge line. Be sure that caps on the ports are tight.

Compressor Rotation

On 3-phase units with scroll compressors, it is important to be certain compressor is rotating in the proper direction. To determine whether or not compressor is rotating in the proper direction:

1. Connect service gauges to suction and discharge pressure fittings.
2. Energize the compressor.
3. The suction pressure should drop and the discharge pressure should rise, as is normal on any start-up.

If the suction pressure does not drop and the discharge pressure does not rise to normal levels:

1. Note that the evaporator fan is probably also rotating in the wrong direction.
2. Turn off power to the unit and install lockout tag.
3. Reverse any two of the unit power leads.
4. Re-energize to the compressor. Check pressures.

The suction and discharge pressure levels should now move to their normal start-up levels.

NOTE: When the compressor is rotating in the wrong direction, the unit will make an elevated level of noise and will not provide cooling.

Cooling

Set space thermostat to OFF position. To start unit, turn on main power supply. Set system selector switch at COOL position and fan switch at AUTO. position. Adjust thermostat to a setting approximately 5°F (3°C) below room temperature. Both compressors start on closure of contactors.

Check unit charge. Refer to Refrigerant Charge section.

Reset thermostat at a position above room temperature. Both compressors will shut off. Evaporator fan will shut off after a 30-second delay. The supply fan and both compressors will shut off.

To shut off unit, set system selector switch at OFF position. Resetting thermostat at a position above room temperature shuts unit off temporarily until space temperature exceeds thermostat setting.

Heating

To start unit, turn on main power supply.

Set system selector switch at HEAT position and set thermostat at a setting above room temperature. Set fan at AUTO position.

First stage of thermostat energizes the first-stage electric heater elements; second stage energizes second-stage electric heater elements, if installed. Check heating effects at air supply grille(s).

If electric heaters do not energize, reset limit switch (located on evaporator-fan scroll) by pressing button located between terminals on the switch.

To Shut Off Unit

Set system selector switch at OFF position. Resetting thermostat at a position below room temperature temporarily shuts unit off until space temperature falls below thermostat setting.

Ventilation (Continuous Fan)

Set fan and system selector switches at ON and OFF positions, respectively. Evaporator fan operates continuously to provide constant air circulation.

FASTENER TORQUE VALUES

See Table 27 for torque values.

Table 27 – Torque Values

Supply fan motor mounting	120 ± 12 in–lbs	13.5 ± 1.4 Nm
Supply fan motor adjustment plate	120 ± 12 in–lbs	13.5 ± 1.4 Nm
Motor pulley setscrew	72 ± 5 in–lbs	8.1 ± 0.6 Nm
Fan pulley setscrew	72 ± 5 in–lbs	8.1 ± 0.6 Nm
Blower wheel hub setscrew	72 ± 5 in–lbs	8.1 ± 0.6 Nm
Bearing locking collar setscrew	65 to 70 in–lbs	7.3 to 7.9 Nm
Compressor mounting bolts	65 to 75 in–lbs	7.3 to 7.9 Nm
Condenser fan motor mounting bolts	20 ± 2 in–lbs	2.3 ± 0.2 Nm
Condenser fan hub setscrew	84 ± 12 in–lbs	9.5 ± 1.4 Nm

MODEL NUMBER NOMENCLATURE

1	2	3	4	5	6	7	8	9	10	11	12	13	14	15	16	17	18
5	0	L	C	D	0	1	2	A	2	A	5	–	0	A	0	A	0

Unit Type
50 = Electric Cooling Packaged Rooftop

Model Series – WeatherExpert
LC = Ultra High Efficiency

Heat Size
D = Low Electric Heat
E = Medium Electric Heat
F = High Electric Heat

Refrig. System Options
0 = 3 stage cooling capacity

Nominal Cooling Tons
07 = 6 Ton
08 = 7.5 Ton
09 = 8.5 Ton
12 = 10 Ton

Sensor Options
A = None
B = RA smoke detector
C = SA smoke detector
D = RA & SA smoke detector
E = CO_2 sensor
F = RA smoke detector & CO_2
G = SA smoke detector & CO_2
H = RA & SA smoke detector & CO_2

Indoor Fan Options
1 = Standard Static Belt Drive with VFD Controller
2 = Medium Static Belt Drive with VFD Controller
3 = High Static Belt Drive with VFD Controller
4 = Ultra High Static Belt Drive with VFD Controller (08, 09 only)

Coil Options (Outdoor – Indoor – Hailguard)
A = Al/Cu – Al/Cu
B = Precoat Al/Cu – Al/Cu
C = E coat Al/Cu – Al/Cu
D = E coat Al/Cu – E coat Al/Cu
E = Cu/Cu – Al/Cu
F = Cu/Cu – Cu/Cu
M = Al/Cu – Al/Cu – Louvered Hail Guard
N = Precoat Al/Cu – Al/Cu – Louvered Hail Guard
P = E – coat Al/Cu – Al/Cu – Louvered Hail Guard
Q = E – coat Al/Cu – E – coat Al/Cu – Louvered Hail Guard
R = Cu/Cu – Al/Cu – Louvered Hail Guard
S = Cu/Cu – Cu/Cu – Louvered Hail Guard

Voltage
1 = 575/3/60
5 = 208 – 230/3/60
6 = 460/3/60

Design Rev
– Factory design revision

Base Unit Controls
0 = Electro – Mechanical Control

Air Intake / Exhaust Options
A = None
N = Temp ultra low leak econo w/ baro relief
R = Enthal ultra low leak econo w/ baro relief

Service Options
0 = None
1 = Unpowered convenience outlet
2 = Powered convenience outlet
3 = Hinged panels
4 = Hinged panels, unpwrd conv outlet
5 = Hinged panels, pwrd conv outlet

Electrical Options
A = None
B – HACR breaker
C = Non – fused disconnect
D = Thru the base connections
E = HACR breaker & thru the base
F = Non – fused & thru the base

Brand / Packaging
0 = Standard
1 = LTL

SEQUENCE OF OPERATION

General

The Carrier Integrated Staging Control Board (ISC) is intended for use with a standard thermostat capable of three cooling stages. After initial power to the board, a Green LED will blink with a 1 second duty cycle indicating the unit is running properly. When the unit is not running properly, the Green LED will blink along with Red LED lights. The Red LED light configuration will indicate the type of error the board has identified.

The ISC board can be remotely shutdown by removing Jumper 4 and wiring to the Remote Shutdown terminal. The Smoke Control Module can shut down the unit by removing Jumper 3 and wiring to the Smoke Shutdown terminal. A smoke alarm can be obtained by wiring to the Smoke Alarm terminal.

The crankcase heater will run at all times except when the compressors are running. An auxiliary power supply (24Vac) available at TB-4 Terminal is provided to power auxiliary equipment. An optional Phase Monitor Relay can be wired to the PMR terminal by removing Jumper 5.

Ventilation

In the Ventilation/Fan Mode (G on the thermostat), the indoor fan will run at low speed and the damper will operate at minimum position.

Cooling

In the Cooling Mode, the small and large compressors will be sequenced to maintain the thermostat/DDC temperature setpoint. The chart below shows the cooling operation based on the following conditions.

INPUT	OUTPUT			
Thermostat	Compressor C1	Compressor C2	Indoor Fan Speed	Outdoor Fan Speed
First Stage Cooling (Y1)	On	Off	Low	Low (700 rpm)
Second Stage Cooling (Y2)	Off	On	Medium	Medium (800 rpm)
Third Stage Cooling (Y3)	On	On	High	High (1,000 rpm)

The outdoor fan and VFD controlled indoor-fan will operate at low, medium and high speed. The indoor-fan speed (rpm) is factory set by the CFM and static pressure requirements for the unit installed.

Economizer (Optional)

When the Economizer is in Free Cooling Mode and a demand for cooling exists (Y1 on the thermostat), the Economizer will modulate the outdoor-air damper to provide a 50°F (10°C) to 55°F (13°C) mixed-air temperature into the zone and run the indoor-fan at high speed. As mixed-air temperature fluctuates above 55°F (13°C) or below 50°F (10°C) dampers will be modulated (open or close) to bring the mixed-air temperature back within control. Upon more call for cooling (Y2 on the thermostat), the outdoor-air damper will maintain its current position, compressor C1 will run and the outdoor-fan will run at low speed. If there is further demand for cooling, the outdoor-air damper will maintain its current position, only compressor C2 will run and the outdoor fan will run at medium speed. The VFD controlled indoor fan will operate at high speed regardless of the cooling demand.

If the increase in cooling capacity causes the mixed-air temperature to drop below 45°F, the outdoor-air damper will return to the minimum position. If the mixed-air temperature continues to fall, the outdoor-air damper will close. Once the mixed air temperature rises above 48°F (9°C), the control returns to normal. The power exhaust fans will be energized and de-energized, if installed, as the outdoor-air damper opens and closes.

In field-installed accessory CO2 sensors are connected to the Economizer, a demand controlled ventilation strategy will begin to operate. As the CO2 level in the zone increases above the CO2 setpoint, the minimum position of the damper will be increased proportionally. As the CO2 level decreases because of the increase of fresh air, the outdoor-air damper will be proportionally closed. For economizer operation, there must be a thermostat call for the fan (G). If the unit is occupied and the fan is on, the damper will operate at minimum position. Otherwise, the damper will be closed.

Low Ambient Cooling Operation down to 40°F (4°C)

In Low Ambient RTU conditions when the temperature is between 55°F (13°C) and 40°F (4°C), the Low Ambient Switch (LAS) will be active and the outdoor-fans will run to the pre-set factory outdoor-fan speed. When the temperature is greater than 65°F (18°C), the Low Ambient Switch will deactivate and the outdoor-fans will run in the standard cooling mode. If the Outdoor Fan Select Switch (see Fig. 71) is in the up position, the outdoor fans will run in the Fan Cycle Speed Mode (FCS) set to 250 rpm. If the Outdoor Fan Select Switch is in the down position, the outdoor fans will run in the Minimum Fan Speed Mode (MIN) set to 160 rpm regardless of the cooling demand.

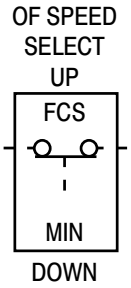

C13327

Fig. 71 - Outdoor Fan Speed Select Switch

LC size 007 units have a SPST normally open Low Ambient Switch wired across the TS and OF terminal and a jumper placed across the PS terminal (See Fig. 72). When the LAS is active, the switch will close making contact to the OF terminal. This is done for units that require all outdoor fans to run at the same pre-set factory Low Ambient Speed.

LC Size 008 through 012 Units have a SPDT Low Ambient Switch wired to the OF terminal and the Outdoor Fan Relay (See Fig. 73). The jumper across the PS terminal will be removed. When the LAS is active, the switch will close making contact to the OF terminal and will drop connection to the ODF Relay. When electrical connection is removed from the ODF Relay, the PS connection will be opened. This will place the third outdoor-fan electrically isolated from receiving any speed command, which will then turn the motor off. This is done for units that only require two outdoor fans to run at the same pre-set factory Low Ambient Speed.

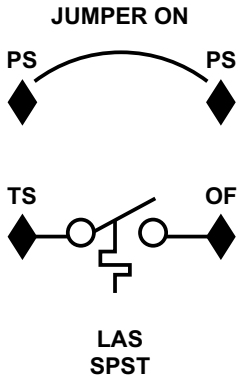

C13328

Fig. 72 - Schematic of SPST Low Ambient Switch

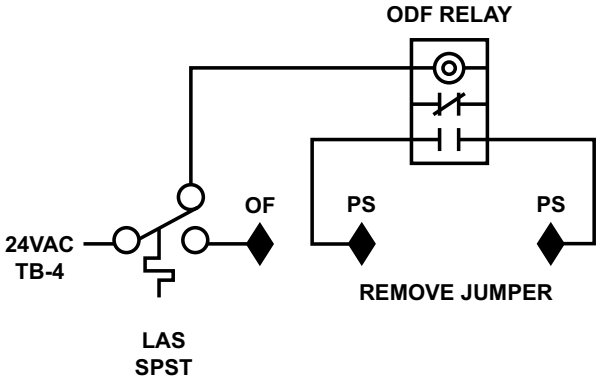

C13329

Fig. 73 - Schematic SPDT Low Ambient Switch

The Low Ambient Outdoor Fan Control chart (listed below) shows the operation of the outdoor fans for each unit

Low Ambient Temperature Outdoor Fan Control

LC Size	No. of Fans On	No. of Fans Off	Switch	LAS FIG. No.	OF Select Switch	RPM
007	2	0	(1) SPST	72	Up	250
008	2	1	(1) SPDT	73	Down	160
009	2	1	(1) SPDT	73	Down	160
012	2	1	(1) SPDT	73	Down	160

Heating

In the Heating Mode (W1 on the thermostat), power is applied to the G and W1 terminal at the ISC board and energizes the first state of electric heat. Upon more call for heat (W2 at the thermostat), power is applied to the G and W2 terminal at the ISC board and energizes the second state of electric heat. The VFD controlled indoor fan will operate at high speed regardless of the heating demand.

			50LC*07	50LC*08	50LC*09	50LC*12
Refrigeration System						
		# Circuits / # Comp. / Type	1/2/Scroll	1/2/Scroll	1/2/Scroll	1/2/Scroll
		R–410a charge (lbs – oz)	15 – 8	22 – 5	25–11	24–15
		Metering device	TXV	TXV	TXV	TXV
		High–press. Trip / Reset (psig)	630 / 505	630 / 505	630 / 505	630 / 505
		Low–press. Trip / Reset (psig)	27 / 44	27 / 44	54/117	54/117
Evaporator Coil						
		Material	Cu / Al	Cu / Al	Cu / Al	Cu / Al
		Coil type	5/16” RTPF	5/16” RTPF	5/16” RTPF	5/16” RTPF
		Rows / FPI	4 / 15	4 / 15	4 / 15	4 / 15
		Total Face Area (ft^2)	11.1	17.5	17.5	17.5
		Condensate Drain Conn. Size	3/4”	3/4”	3/4”	3/4”
Evaporator Fan and Motor						
	Standard Static	Motor Qty / Drive type	1 / Belt	1 / Belt	1 / Belt	1 / Belt
		Max BHP	1.7	1.7	1.7	2.4
		RPM range	356–534	338–507	338–507	375–563
		Motor Frame Size	56	56	56	56Z
		Fan Qty / Type	1 / Centrifugal	1 / Centrifugal	1 / Centrifugal	1 / Centrifugal
		Fan Diameter (in)	15.5 x 15	18.5 x 18	18.5 x 18	18.5 X 18
	Medium Static	Motor Qty / Drive type	1 / Belt	1 / Belt	1 / Belt	1 / Belt
		Max BHP	1.7	1.7	1.7	2.9
		RPM range	539–809	488–675	488–675	547–757
		Motor Frame Size	56	56	56	56
		Fan Qty / Type	1 / Centrifugal	1 / Centrifugal	1 / Centrifugal	1 / Centrifugal
		Fan Diameter (in)	15.5 x 15	18.5 x 18	18.5 x 18	18.5 X 18
	High Static	Motor Qty / Drive type	1 / Belt	1 / Belt	1 / Belt	1 / Belt
		Max BHP	2.9	2.9	3.7	4.9
		RPM range	799–1054	623–863	675–863	760–960
		Motor Frame Size	56	56	56HZ	145TZ
		Fan Qty / Type	1 / Centrifugal	1 / Centrifugal	1 / Centrifugal	1 / Centrifugal
		Fan Diameter (in)	15.5 x 15	18.5 x 18	18.5 x 18	18.5 X 18
	Ultra High Static	Motor Qty / Drive type	N/A	1 / Belt	1 / Belt	N/A
		Max BHP (208/230/460/575v)	N/A	3.7	4.9	N/A
		RPM range	N/A	847–1150	832–1021	N/A
		Motor Frame Size	N/A	56HZ	145TZ	N/A
		Fan Qty / Type	N/A	1 / Centrifugal	1 / Centrifugal	N/A
		Fan Diameter (in)	N/A	18.5 x 18	18.5 x 18	N/A

	50LC*07	50LC*08	50LC*09	50LC*12
Condenser Coil 1				
Material	Cu / Al	Cu / Al	Cu / Al	Cu / Al
Coil type	5/16” RTPF	5/16” RTPF	5/16” RTPF	5/16” RTPF
Rows / FPI	2 / 18	2 / 18	2/18	2/18
Total Face Area (ft2)	25.1	36.1	23.1	23.1
Condenser Coil 2				
Material			Cu / Al	Cu / Al
Coil type			5/16” RTPF	5/16” RTPF
Rows / FPI			2/18	2/18
Total Face Area (ft2)			23.1	23.1
Condenser fan / motor				
Qty / Motor drive type	2 / direct	3 / direct	3 / direct	3 / direct
Motor HP / RPM	1/3 / 1000	1/3 / 1000	1/3 / 1000	1/3 / 1000
Fan diameter (in)	22	22	22	22
Filters				
RA Filter # / size (in)	4/ 19 5/8 x 19 5/8 x 2	6/ 18 x 24 x 2	6 / 18 x 24 x 2	7 / 18 x 24 x 2
OA inlet screen # / size (in)	V 2 / 24 x 27 x 1 H 1 / 30 x 39 x1	V 2 / 24 x 27 x 1 H 1 / 30 x 39 x1	V 2 / 24 x 27 x 1H 1 / 30 x 39 x2	V 2 / 24 x 27 x 1 H 1 / 30 x 39 x2

NOM. V–Ph–Hz	IFM TYPE	ELECTRIC HEATER PART NUMBER CRHEATER	NOM PWR (kW)	APP PWR (kW)	SINGLE POINT KIT PART NUMBER CRSINGLEXXXA00			
					NO C.O. or UNPWRD C.O.		w/PWRD C.O.	
					NO P.E.	w/ P.E. (pwrd fr/unit)	NO P.E.	w/ P.E. (pwrd fr/unit)
208/ 230–3–60	STD	264A00	6.5	4.9/6.0	047	047	047	047
		110A00	16.0	12.0/14.7	047	047	049	049
		111A00	24.8	18.6/22.8	049	049	049	049
	MED	264A00	6.5	4.9/6.0	047	047	047	047
		110A00	16.0	12.0/14.7	047	047	049	049
		111A00	24.8	18.6/22.8	049	049	049	049
	HIGH	264A00	6.5	4.9/6.0	047	047	047	047
		110A00	16.0	12.0/14.7	047	049	049	049
		111A00	24.8	18.6/22.8	049	049	049	049
460–3–60	STD	265A00	6.0	5.5	047	047	047	047
		267A00	14.0	12.9	047	047	047	047
		269A00	25.5	23.4	047	047	047	047
	MED	265A00	6.0	5.5	047	047	047	047
		267A00	14.0	12.9	047	047	047	047
		269A00	25.5	23.4	047	047	047	047
	HIGH	265A00	6.0	5.5	047	047	047	047
		267A00	14.0	12.9	047	047	047	047
		269A00	25.5	23.4	047	047	047	047
575–3–60	STD	308A00	17.0	17.0	047	047	047	047
		299A00	25.7	25.7	047	047	047	047
	MED	308A00	17.0	17.0	047	047	047	047
		299A00	25.7	25.7	047	047	047	047
	HIGH	308A00	17.0	17.0	047	047	047	047
		299A00	25.7	25.7	047	047	047	047

LEGEND
APP PWR – 208 / 230V / 460V / 575V
C.O. – Convenient outlet
IFM – Indoor fan motor
NOM PWR – 240V / 480V / 600V
P.E. – Power exhaust
PWRD – Powered convenient outlet
UNPWRD – Unpowered convenient outlet

NOM. V–Ph–Hz	IFM TYPE	ELECTRIC HEATER PART NUMBER CRHEATER	NOM PWR (kW)	APP PWR (kW)	SINGLE POINT KIT PART NUMBER CRSINGLEXXXA00			
					NO C.O. or UNPWRD C.O.		w/PWRD C.O.	
					NO P.E.	w/ P.E. (pwrd fr/unit)	NO P.E.	w/ P.E. (pwrd fr/unit)
208/ 230–3–60	STD	288A00	10.0	7.5/9.2	–	–	–	–
		291A00	16.5	12.4/15.2	–	049	049	049
		294A00	33.5	25.2/30.8	049	049	049	049
	MED	288A00	10.0	7.5/9.2	–	–	–	–
		291A00	16.5	12.4/15.2	–	049	049	049
		294A00	33.5	25.2/30.8	049	049	049	049
	HIGH	288A00	10.0	7.5/9.2	–	–	–	–
		291A00	16.5	12.4/15.2	–	049	049	049
		294A00	33.5	25.2/30.8	049	049	049	049
	ULTRA HIGH	288A00	10.0	7.5/9.2	–	–	–	–
		291A00	16.5	12.4/15.2	049	049	049	049
		294A00	33.5	25.2/30.8	049	049	049	049
460–3–60	STD	289A00	10.0	9.2	–	–	–	–
		292A00	16.5	15.2	–	–	–	–
		295A00	33.5	30.8	047	047	047	047
	MED	289A00	10.0	9.2	–	–	–	–
		292A00	16.5	15.2	–	–	–	–
		295A00	33.5	30.8	047	047	047	047
	HIGH	289A00	10.0	9.2	–	–	–	–
		292A00	16.5	15.2	–	–	–	–
		295A00	33.5	30.8	047	047	047	050
	ULTRA HIGH	289A00	10.0	9.2	–	–	–	–
		292A00	16.5	15.2	–	–	–	–
		295A00	33.5	30.8	047	047	047	050
575–3–60	STD	293A00	16.5	15.2	–	–	–	–
		296A00	33.5	30.8	047	047	047	047
	MED	293A00	16.5	15.2	–	–	–	–
		296A00	33.5	30.8	047	047	047	047
	HIGH	293A00	16.5	15.2	–	–	–	–
		296A00	33.5	30.8	047	047	047	047
	ULTRA HIGH	293A00	16.5	15.2	–	–	–	–
		296A00	33.5	30.8	047	047	047	047

LEGEND
APP PWR – 208 / 230V / 460V / 575V
C.O. – Convenient outlet
IFM – Indoor fan motor
NOM PWR – 240V / 480V / 600V
P.E. – Power exhaust
PWRD – Powered convenient outlet
UNPWRD – Unpowered convenient outlet

NOM. V–Ph–Hz	IFM TYPE	ELECTRIC HEATER PART NUMBER CRHEATER	NOM PWR (kW)	APP PWR (kW)	SINGLE POINT KIT PART NUMBER CRSINGLEXXXA00			
					NO C.O. or UNPWRD C.O.		w/PWRD C.O.	
					NO P.E.	w/ P.E. (pwrd fr/unit)	NO P.E.	w/ P.E. (pwrd fr/unit)
208/ 230–3–60	STD	288A00	10.0	7.5/9.2	–	–	–	–
		291A00	16.5	12.4/15.2	–	049	049	049
		294A00	33.5	25.2/30.8	049	049	049	049
	MED	288A00	10.0	7.5/9.2	–	–	–	–
		291A00	16.5	12.4/15.2	–	049	049	049
		294A00	33.5	25.2/30.8	049	049	049	049
	HIGH	288A00	10.0	7.5/9.2	–	–	–	049
		291A00	16.5	12.4/15.2	049	049	049	049
		294A00	33.5	25.2/30.8	049	049	049	049
	ULTRA HIGH	288A00	10.0	7.5/9.2	–	–	049	049
		291A00	16.5	12.4/15.2	049	049	049	049
		294A00	33.5	25.2/30.8	049	049	049	049
460–3–60	STD	289A00	10.0	9.2	–	–	–	–
		292A00	16.5	15.2	–	–	–	–
		295A00	33.5	30.8	047	047	047	047
	MED	289A00	10.0	9.2	–	–	–	–
		292A00	16.5	15.2	–	–	–	–
		295A00	33.5	30.8	047	047	047	047
	HIGH	289A00	10.0	9.2	–	–	–	–
		292A00	16.5	15.2	–	–	–	–
		295A00	33.5	30.8	047	047	047	050
	ULTRA HIGH	289A00	10.0	9.2	–	–	–	–
		292A00	16.5	15.2	–	–	–	–
		295A00	33.5	30.8	047	050	050	050
575–3–60	STD	293A00	16.5	15.2	–	–	–	–
		296A00	33.5	30.8	047	047	047	047
	MED	293A00	16.5	15.2	–	–	–	–
		296A00	33.5	30.8	047	047	047	047
	HIGH	293A00	16.5	15.2	–	–	–	–
		296A00	33.5	30.8	047	047	047	047
	ULTRA HIGH	293A00	16.5	15.2	–	–	–	–
		296A00	33.5	30.8	047	047	047	047

LEGEND
APP PWR – 208 / 230V / 460V / 575V
C.O. – Convenient outlet
IFM – Indoor fan motor
NOM PWR – 240V / 480V / 600V
P.E. – Power exhaust
PWRD – Powered convenient outlet
UNPWRD – Unpowered convenient outlet

NOM. V–Ph–Hz	IFM TYPE	ELECTRIC HEATER PART NUMBER CRHEATER	NOM PWR (kW)	APP PWR (kW)	SINGLE POINT KIT PART NUMBER CRSINGLEXXXA00			
					NO C.O. or UNPWRD C.O.		w/PWRD C.O.	
					NO P.E.	w/ P.E. (pwrd fr/unit)	NO P.E.	w/ P.E. (pwrd fr/unit)
208/ 230–3–60	STD	288A00	10.0	7.5/9.2	–	–	–	049
		291A00	16.5	12.4/15.2	–	049	049	049
		294A00	33.5	25.2/30.8	049	049	049	049
		291A00,294A00	50.0	37.6/45.9	051	051	051	051
	MED	288A00	10.0	7.5/9.2	–	049	049	049
		291A00	16.5	12.4/15.2	–	049	049	049
		294A00	33.5	25.2/30.8	049	049	049	049
		291A00,294A00	50.0	37.6/45.9	051	051	051	051
	HIGH	288A00	10.0	7.5/9.2	049	049	049	049
		291A00	16.5	12.4/15.2	049	049	049	049
		294A00	33.5	25.2/30.8	049	049	049	049
		291A00,294A00	50.0	37.6/45.9	051	051	051	051
460–3–60	STD	289A00	10.0	9.2	–	–	–	–
		292A00	16.5	15.2	–	–	–	–
		295A00	33.5	30.8	047	047	047	050
		292A00,295A00	50.0	45.9	050	050	050	050
	MED	289A00	10.0	9.2	–	–	–	–
		292A00	16.5	15.2	–	–	–	–
		295A00	33.5	30.8	047	047	047	050
		292A00,295A00	50.0	45.9	050	050	050	050
	HIGH	289A00	10.0	9.2	–	–	–	–
		292A00	16.5	15.2	–	–	–	–
		295A00	33.5	30.8	047	050	050	050
		292A00,295A00	50.0	45.9	050	050	050	050
575–3–60	STD	293A00	16.5	15.2	–	–	–	–
		296A00	33.5	30.8	047	047	047	047
		293A00,296A00	50.0	45.9	047	047	047	047
	MED	293A00	16.5	15.2	–	–	–	–
		296A00	33.5	30.8	047	047	047	047
		293A00,296A00	50.0	45.9	047	047	047	050
	HIGH	293A00	16.5	15.2	–	–	–	–
		296A00	33.5	30.8	047	047	047	047
		293A00,296A00	50.0	45.9	047	050	047	050

LEGEND
APP PWR – 208 / 230V / 460V / 575V
C.O. – Convenient outlet
IFM – Indoor fan motor
NOM PWR – 240V / 480V / 600V
P.E. – Power exhaust
PWRD – Powered convenient outlet
UNPWRD – Unpowered convenient outlet

GENERAL FAN PERFORMANCE NOTES:

1. Interpolation is permissible. Do not extrapolate.
2. External static pressure is the static pressure difference between the return duct and the supply duct plus the static pressure caused by any FIOPs or accessories.
3. Tabular data accounts for pressure loss due to clean filters, unit casing, and wet coils. Factory options and accessories may add static pressure losses. Selection software is available, through your salesperson, to help you select the best motor/drive combination for your application.
4. The Fan Performance tables offer motor/drive recommendations. In cases when two motor/drive combinations would work, Carrier recommended the lower horsepower option.
5. For information on the electrical properties of Carrier motors, please see the Electrical information section of this book.
6. For more information on the performance limits of Carrier motors, see the application data section of this book.
7. The EPACT (Energy Policy Act) regulates energy requirements for specific types of indoor fan motors. Motors regulated by EPACT include any general purpose, T-frame (three-digit, 143 and larger), single-speed, foot mounted, polyphase, squirrel cage induction motors of NEMA (National Electrical Manufacturers Association) design A and B, manufactured for use in the United States. Ranging from 1 to 200 Hp, these continuous-duty motors operate on 230 and 460 volt, 60 Hz power. If a motor does not fit into these specifications, the motor does not have to be replaced by an EPACT compliant energy-efficient motor. Variable-speed motors are exempt from EPACT compliance requirements.

FAN PERFORMANCE

Table 33 – 50LC07** — **6 TON VERTICAL SUPPLY**

CFM	Available External Static Pressure (in. wg)																			
	0.2		0.4		0.6		0.8		1.0		1.2		1.4		1.6		1.8		2.0	
	RPM	BHP	RPM	BHP	RPM	BHP	RPM	BHP	RPM	BHP	RPM	BHP	RPM	BHP	RPM	BHP	RPM	BHP	RPM	BHP
1800	392	0.22	492	0.33	580	0.46	658	0.59	729	0.74	793	0.89	854	1.05	910	1.22	963	1.39	1013	1.57
1950	408	0.25	502	0.37	587	0.51	664	0.65	733	0.80	798	0.96	857	1.13	913	1.30	966	1.48	1016	1.66
2100	425	0.30	514	0.42	596	0.56	670	0.71	739	0.87	802	1.04	861	1.21	917	1.39	969	1.57	1019	1.76
2250	442	0.35	526	0.48	605	0.62	678	0.78	745	0.94	807	1.12	866	1.30	921	1.48	973	1.67	1022	1.87
2400	460	0.41	540	0.54	616	0.69	686	0.85	752	1.02	813	1.20	871	1.39	926	1.58	977	1.78	1026	1.98
2550	479	0.47	555	0.61	627	0.77	696	0.93	760	1.11	820	1.29	877	1.49	931	1.68	982	1.89	1031	2.10
2700	499	0.55	570	0.69	640	0.85	706	1.02	768	1.20	827	1.39	883	1.59	936	1.79	987	2.00	1035	2.22
2850	519	0.63	587	0.77	653	0.94	717	1.12	778	1.30	835	1.50	890	1.70	943	1.91	993	2.13	1040	2.35
3000	539	0.71	604	0.87	667	1.04	729	1.22	788	1.41	844	1.61	898	1.82	949	2.04	999	2.26	1046	2.49
	STD Static (356–534rpm) 1.7 Max BHP						MID Static (539–809rpm) 1.7 Max BHP						HIGH Static (799–1054rpm) 2.9 Max BHP							
	Bold Face = Field Supplied Drive (High Static motor, motor pulley = KR11HY213, blower pulley = KR51BH615, belt = KR29BF047) 880–1080 rpm																			

Table 34 – 50LC07** — **6 TON HORIZONTAL SUPPLY**

CFM	Available External Static Pressure (in. wg)																			
	0.2		0.4		0.6		0.8		1.0		1.2		1.4		1.6		1.8		2.0	
	RPM	BHP	RPM	BHP	RPM	BHP	RPM	BHP	RPM	BHP	RPM	BHP	RPM	BHP	RPM	BHP	RPM	BHP	RPM	BHP
1800	366	0.19	466	0.30	555	0.42	635	0.55	707	0.69	772	0.84	833	1.00	890	1.16	943	1.33	994	1.50
1950	379	0.22	474	0.33	560	0.46	638	0.60	709	0.75	774	0.90	834	1.06	891	1.23	944	1.40	995	1.58
2100	394	0.26	483	0.38	566	0.51	642	0.65	711	0.80	776	0.96	836	1.13	892	1.31	945	1.49	995	1.67
2250	409	0.31	493	0.43	573	0.56	647	0.71	715	0.87	778	1.03	838	1.21	894	1.39	946	1.57	996	1.76
2400	426	0.36	505	0.48	581	0.62	652	0.77	719	0.94	782	1.11	840	1.29	895	1.47	948	1.66	998	1.86
2550	443	0.41	517	0.54	590	0.68	659	0.84	724	1.01	785	1.19	843	1.37	898	1.56	950	1.76	999	1.96
2700	460	0.48	531	0.61	600	0.75	667	0.92	730	1.09	790	1.27	847	1.46	901	1.66	952	1.86	1001	2.07
2850	478	0.55	545	0.68	611	0.83	675	1.00	737	1.17	795	1.36	851	1.56	904	1.76	955	1.97	1004	2.18
3000	497	0.62	560	0.76	623	0.92	685	1.09	744	1.27	802	1.46	856	1.66	909	1.87	959	2.08	1007	2.30
	STD Static (356–534rpm) 1.7 Max BHP						MID Static (539–809rpm) 1.7 Max BHP						HIGH Static (799–1054rpm) 2.9 Max BHP							
	Bold Face = Field Supplied Drive (Standard Motor, Motor pulley = VP34 5/8, blower pulley = AK109 X 1, belt = KR29AF046) 322–484 rpm																			

FAN PERFORMANCE (cont.)

Table 35 – 50LC08** — **7.5 TON VERTICAL SUPPLY**

CFM	Available External Static Pressure (in. wg)																			
	0.2		0.4		0.6		0.8		1.0		1.2		1.4		1.6		1.8		2.0	
	RPM	BHP	RPM	BHP	RPM	BHP	RPM	BHP	RPM	BHP	RPM	BHP	RPM	BHP	RPM	BHP	RPM	BHP	RPM	BHP
2250	**328**	**0.23**	438	0.44	521	0.68	588	0.93	647	1.19	699	1.47	746	1.76	790	2.06	830	2.36	869	2.68
2438	**335**	**0.25**	443	0.48	527	0.73	596	0.99	655	1.27	707	1.56	755	1.86	799	2.17	840	2.49	879	2.81
2625	342	0.28	448	0.51	533	0.77	602	1.05	662	1.34	715	1.64	764	1.96	808	2.28	850	2.61	889	2.95
2813	349	0.32	454	0.56	538	0.83	608	1.12	669	1.42	723	1.73	772	2.06	817	2.40	859	2.74	898	3.09
3000	358	0.36	459	0.60	543	0.88	614	1.18	675	1.50	730	1.83	779	2.16	825	2.51	867	2.87	907	3.24
3188	367	0.40	465	0.65	548	0.94	620	1.25	681	1.58	737	1.92	786	2.27	832	2.63	875	3.00	915	3.38
3375	378	0.45	471	0.70	554	1.00	625	1.32	687	1.66	743	2.01	793	2.38	840	2.75	883	3.14	923	3.53
3563	388	0.50	477	0.75	559	1.06	630	1.39	693	1.75	749	2.11	800	2.49	846	2.88	890	3.27	931	3.68
3750	400	0.56	484	0.82	564	1.13	635	1.47	698	1.83	754	2.21	806	2.60	853	3.00	897	3.41	*938*	*3.83*
	STD Static (338–507rpm) 1.7 Max BHP					MID Static (488–675rpm) 1.7 Max BHP					HIGH Static (623–863rpm) 2.9 Max BHP					ULTRA HIHG Static (847–1150rpm) 3.7 Max BHP				
	Bold Face= Field Supplied Drive(Standard motor, motor pulley = KR11HY151, blower pulley = AK114 1 3/16, belt = A47) 308–462rpm																			
	Italics= Field Supplied Motor and Drive (Motor = HD60FK658, motor pulley = KR11HY213, blower pulley = KR11AK215, belt = KR29AF048) 836–1006rpm																			

Table 36 – 50LC08** — **7.5 TON HORIZONTAL SUPPLY**

CFM	Available External Static Pressure (in. wg)																			
	0.2		0.4		0.6		0.8		1.0		1.2		1.4		1.6		1.8		2.0	
	RPM	BHP	RPM	BHP	RPM	BHP	RPM	BHP	RPM	BHP	RPM	BHP	RPM	BHP	RPM	BHP	RPM	BHP	RPM	BHP
2250	**347**	**0.26**	457	0.49	546	0.76	621	1.07	686	1.40	744	1.75	798	2.11	847	2.49	893	2.89	936	3.31
2438	**356**	**0.29**	463	0.53	551	0.81	626	1.13	692	1.47	750	1.82	804	2.20	854	2.60	900	3.01	944	3.43
2625	**366**	**0.33**	469	0.57	556	0.86	631	1.19	697	1.54	756	1.91	810	2.30	860	2.70	907	3.12	951	3.56
2813	377	0.37	476	0.62	562	0.92	636	1.25	702	1.61	762	1.99	816	2.39	866	2.81	913	3.24	958	3.69
3000	388	0.42	483	0.67	567	0.98	641	1.32	707	1.69	767	2.08	822	2.49	872	2.92	919	3.36	964	3.82
3188	401	0.47	491	0.73	573	1.04	647	1.39	713	1.76	772	2.17	827	2.59	878	3.03	925	3.48	970	3.95
3375	414	0.54	500	0.79	580	1.11	652	1.46	718	1.85	777	2.26	832	2.69	883	3.14	931	3.61	976	4.09
3563	427	0.60	509	0.87	587	1.18	658	1.55	723	1.94	782	2.36	837	2.80	888	3.26	936	3.74	981	4.23
3750	441	0.68	519	0.94	595	1.27	664	1.63	729	2.03	788	2.46	842	2.91	894	3.38	941	3.87	987	4.37
	STD Static (338–507rpm) 1.7 Max BHP					MID Static (488–675rpm) 1.7 Max BHP					HIGH Static (623–863rpm) 2.9 Max BHP					ULTRA HIGH Static (847–1150rpm) 3.7 Max BHP				
	Bold Face = Field Supplied Drive (Standard motor, motor pulley = KR11HY151, blower pulley = AK114 1 3/16, belt = A47) 308–462 rpm																			

FAN PERFORMANCE (cont.)

Table 37 – 50LC09** — **8.5 TON VERTICAL SUPPLY**

CFM	Available External Static Pressure (in. wg)																			
	0.2		0.4		0.6		0.8		1.0		1.2		1.4		1.6		1.8		2.0	
	RPM	BHP	RPM	BHP	RPM	BHP	RPM	BHP	RPM	BHP	RPM	BHP	RPM	BHP	RPM	BHP	RPM	BHP	RPM	BHP
2550	339	0.27	446	0.50	530	0.76	600	1.03	659	1.31	712	1.61	760	1.92	805	2.23	846	2.56	885	2.90
2763	347	0.31	452	0.54	537	0.81	607	1.10	667	1.40	721	1.71	770	2.03	815	2.36	856	2.71	895	3.06
2975	357	0.35	458	0.59	543	0.87	613	1.17	675	1.49	729	1.81	778	2.15	824	2.50	866	2.85	906	3.22
3188	367	0.40	465	0.65	548	0.94	620	1.25	681	1.58	737	1.92	786	2.27	832	2.63	875	3.00	915	3.38
3400	379	0.46	471	0.71	554	1.01	626	1.33	688	1.67	744	2.03	794	2.39	841	2.77	884	3.15	924	3.55
3613	391	0.52	479	0.77	560	1.08	631	1.41	694	1.77	750	2.14	801	2.52	848	2.91	892	3.31	933	3.72
3825	405	0.59	488	0.84	566	1.16	637	1.50	700	1.87	757	2.25	808	2.65	855	3.05	899	3.47	941	3.89
4038	418	0.66	497	0.92	573	1.24	643	1.60	706	1.98	763	2.37	814	2.78	862	3.20	907	3.63	948	4.06
4250	432	0.75	507	1.01	580	1.33	649	1.70	712	2.09	769	2.49	821	2.92	869	3.35	913	3.79	955	4.24
	STD Static (338–507rpm) 1.7 Max BHP					MID Static (488–675rpm) 1.7 Max BHP					HIGH Static (675–863rpm) 3.7 Max BHP					ULTRA HIGH Static (832–1021rpm) 4.9 Max BHP				
	Bold Face= Field Supplied Drive(Standard motor, motor pulley = KR11HY151, blower pulley = AK114 1 3/16, belt = A47) 308–462rpm																			

Table 38 – 50LC09** — **8.5 TON HORIZONTAL SUPPLY**

CFM	Available External Static Pressure (in. wg)																			
	0.2		0.4		0.6		0.8		1.0		1.2		1.4		1.6		1.8		2.0	
	RPM	BHP	RPM	BHP	RPM	BHP	RPM	BHP	RPM	BHP	RPM	BHP	RPM	BHP	RPM	BHP	RPM	BHP	RPM	BHP
2550	**328**	**0.25**	432	0.46	517	0.71	589	0.98	652	1.28	708	1.59	759	1.91	807	2.25	851	2.60	892	2.96
2763	**337**	**0.29**	437	0.50	521	0.76	594	1.04	657	1.34	714	1.67	765	2.00	813	2.35	857	2.71	899	3.09
2975	347	0.33	442	0.55	526	0.81	598	1.10	661	1.42	719	1.75	771	2.09	819	2.46	863	2.83	906	3.22
3188	358	0.38	448	0.60	530	0.87	602	1.17	666	1.49	723	1.83	776	2.19	824	2.56	869	2.95	912	3.35
3400	371	0.44	456	0.66	535	0.93	606	1.24	670	1.57	727	1.92	780	2.29	829	2.67	874	3.07	917	3.48
3613	384	0.50	464	0.72	541	1.00	611	1.31	674	1.65	732	2.01	785	2.39	834	2.78	879	3.19	922	3.61
3825	397	0.57	473	0.79	547	1.07	615	1.39	678	1.74	736	2.11	789	2.49	838	2.90	884	3.32	927	3.75
4038	411	0.64	483	0.87	554	1.15	621	1.48	683	1.83	740	2.21	793	2.60	842	3.02	888	3.45	932	3.89
4250	426	0.73	493	0.96	561	1.24	626	1.57	687	1.93	744	2.31	797	2.72	846	3.14	893	3.58	936	4.03
	STD Static (338–507rpm) 1.7 Max BHP					MID Static (488–675rpm) 1.7 Max BHP					HIGH Static (675–863rpm) 3.7 Max BHP					ULTRA HIGH Static (832–1021rpm) 4.9 Max BHP				
	Bold Face= Field Supplied Drive(Standard motor, motor pulley = KR11HY151, blower pulley = AK114 1 3/16, belt = A47) 308–462rpm																			

FAN PERFORMANCE (cont.)

Table 39 – 50LC12** — **10 TON VERTICAL SUPPLY**

CFM	Available External Static Pressure (in. wg)																			
	0.2		0.4		0.6		0.8		1.0		1.2		1.4		1.6		1.8		2.0	
	RPM	BHP	RPM	BHP	RPM	BHP	RPM	BHP	RPM	BHP	RPM	BHP	RPM	BHP	RPM	BHP	RPM	BHP	RPM	BHP
3000	**358**	**0.36**	459	0.60	543	0.88	614	1.18	675	1.50	730	1.83	779	2.16	825	2.51	867	2.87	907	3.24
3250	**371**	**0.42**	467	0.66	550	0.96	621	1.27	683	1.61	739	1.95	789	2.31	835	2.67	878	3.05	918	3.43
3500	385	0.48	475	0.74	557	1.04	628	1.37	691	1.72	747	2.08	798	2.45	844	2.83	887	3.23	928	3.63
3750	400	0.56	484	0.82	564	1.13	635	1.47	698	1.83	754	2.21	806	2.60	853	3.00	897	3.41	938	3.83
4000	416	0.65	495	0.91	572	1.23	642	1.58	705	1.96	762	2.35	813	2.76	861	3.17	905	3.60	947	4.03
4250	432	0.75	507	1.01	580	1.33	649	1.70	712	2.09	769	2.49	821	2.92	869	3.35	913	3.79	955	4.24
4500	450	0.86	519	1.13	590	1.45	657	1.82	719	2.22	775	2.65	828	3.08	876	3.53	921	3.99	*963*	*4.46*
4750	468	0.99	533	1.26	600	1.58	665	1.96	726	2.37	782	2.80	834	3.25	883	3.72	928	4.19	*971*	*4.68*
5000	486	1.13	547	1.40	611	1.73	674	2.11	733	2.53	789	2.97	841	3.44	890	3.91	936	4.40	*978*	*4.90*
	STD Static (375–563rpm) 2.4 Max BHP						MID Static (547–757rpm) 2.9 Max BHP						HIGH Static (760–960rpm) 4.9 Max BHP							
													*At 575V, HP is 4.7							
	Bold Face = Field Supplied Drive (Standard motor, motor pulley = KR11HY161, blower pulley = AK134 1 3/16, belt = KR30AE051) 340–470rpm																			
	Italics = Field Supplied Drive (High Static motor, motor pulley = KR11HY213, blower pulley = KR51BH615, belt = KR29BF047) 880–1080 rpm																			

Table 40 – 50LC12** — **10 TON HORIZONTAL SUPPLY**

CFM	Available External Static Pressure (in. wg)																			
	0.2		0.4		0.6		0.8		1.0		1.2		1.4		1.6		1.8		2.0	
	RPM	BHP	RPM	BHP	RPM	BHP	RPM	BHP	RPM	BHP	RPM	BHP	RPM	BHP	RPM	BHP	RPM	BHP	RPM	BHP
3000	**348**	**0.34**	443	0.55	526	0.82	598	1.11	662	1.42	719	1.76	771	2.11	819	2.47	864	2.84	906	3.23
3250	**362**	**0.40**	450	0.62	532	0.88	603	1.19	667	1.51	724	1.86	777	2.22	825	2.59	871	2.98	913	3.39
3500	377	0.46	459	0.69	538	0.96	608	1.27	672	1.61	729	1.96	782	2.34	831	2.72	877	3.13	920	3.54
3750	392	0.54	469	0.77	544	1.04	614	1.36	677	1.70	734	2.07	787	2.46	836	2.86	882	3.27	926	3.70
4000	409	0.63	481	0.86	552	1.14	620	1.46	682	1.81	739	2.19	792	2.58	841	3.00	888	3.42	931	3.86
4250	426	0.73	493	0.96	561	1.24	626	1.57	687	1.93	744	2.31	797	2.72	846	3.14	893	3.58	936	4.03
4500	443	0.84	506	1.07	571	1.36	634	1.69	693	2.05	749	2.45	802	2.86	851	3.29	897	3.74	941	4.21
4750	461	0.96	521	1.20	582	1.49	642	1.82	700	2.19	755	2.59	807	3.01	856	3.45	902	3.91	946	4.39
5000	480	1.10	536	1.34	594	1.64	651	1.97	708	2.34	761	2.75	813	3.18	861	3.63	907	4.09	951	4.58
	STD Static (375–563rpm) 2.4 Max BHP						MID Static (547–757rpm) 2.9 Max BHP						HIGH Static (760–960rpm) 4.9 Max BHP							
													*At 575V, HP is 4.7							
	Bold Face = Field Supplied Drive (Standard motor, motor pulley = KR11HY161, blower pulley = AK134 1 3/16, belt = KR30AE051) 340–470 rpm																			

Table 41 – PULLEY ADJUSTMENT

UNIT	MOTOR/DRIVE COMBO	MOTOR PULLEY TURNS OPEN (RPM)												
		0.0	0.5	1.0	1.5	2.0	2.5	3.0	3.5	4.0	4.5	5.0	5.5	6.0
07	Standard Static	534	516	498	481	463	445	427	409	392	374	356	N/A	N/A
	Medium Static	809	782	755	728	701	674	647	620	593	566	539	N/A	N/A
	High Static	N/A	N/A	1054	1022	990	958	927	895	863	831	799	N/A	N/A
08	Standard Static	507	490	473	456	439	423	406	389	372	355	338	N/A	N/A
	Medium Static	675	656	638	619	600	582	563	544	525	507	488	N/A	N/A
	High Static	863	839	815	791	767	743	719	695	671	647	623	N/A	N/A
	Ultra High Static	N/A	N/A	1150	1120	1089	1059	1029	999	968	938	908	877	847
09	Standard Static	507	490	473	456	439	423	406	389	372	355	338	N/A	N/A
	Medium Static	675	656	638	619	600	582	563	544	525	507	488	N/A	N/A
	High Static	863	844	825	807	788	769	750	731	713	694	675	N/A	N/A
	Ultra High Static	1021	1002	983	964	945	927	908	889	870	851	832	N/A	N/A
12	Standard Static	563	544	525	507	488	469	450	431	413	394	375	N/A	N/A
	Medium Static	757	736	715	694	673	652	631	610	589	568	547	N/A	N/A
	High Static	N/A	N/A	960	940	920	900	880	860	840	820	800	780	760

– Factory settings

– Standard static uses direct drive motor

Copyright 2013 Carrier Corp. • 7310 W. Morris St. • Indianapolis, IN 46231 Edition Date: 10/13 Catalog No:50LC07–12–01SM

Manufacturer reserves the right to change, at any time, specifications and designs without notice and without obligations. Replaces: NEW

START-UP CHECKLIST

(Remove and Store in Job File)

I. PRELIMINARY INFORMATION

MODEL NO.: _____ SERIAL NO.: _____

DATE: _____ TECHNICIAN: _____

II. PRE-START-UP (insert checkmark in box as each item is completed)

☐ VERIFY THAT JOBSITE VOLTAGE AGREES WITH VOLTAGE LISTED ON RATING PLATE

☐ VERIFY THAT ALL PACKAGING MATERIALS HAVE BEEN REMOVED FROM UNIT

☐ REMOVE ALL SHIPPING HOLD DOWN BOLTS AND BRACKETS PER INSTALLATION INSTRUCTIONS

☐ VERIFY THAT CONDENSATE CONNECTION IS INSTALLED PER INSTALLATION INSTRUCTIONS

☐ CHECK REFRIGERANT PIPING FOR INDICATIONS OF LEAKS; INVESTIGATE AND REPAIR IF NECESSARY

☐ CHECK ALL ELECTRICAL CONNECTIONS AND TERMINALS FOR TIGHTNESS

☐ CHECK THAT RETURN (INDOOR) AIR FILTERS ARE CLEAN AND IN PLACE

☐ VERIFY THAT UNIT INSTALLATION IS LEVEL

☐ CHECK FAN WHEELS AND PROPELLER FOR LOCATION IN HOUSING/ORIFICE AND SETSCREW TIGHTNESS

☐ CHECK TO ENSURE THAT ELECTRICAL WIRING IS NOT IN CONTACT WITH REFRIGERANT LINES OR SHARP METAL EDGES

☐ CHECK PULLEY ALIGNMENT AND BELT TENSION PER INSTALLATION INSTRUCTIONS

III. START-UP

ELECTRICAL

SUPPLY VOLTAGE	L1-L2	_____	L2-L3	_____	L3-L1	_____
COMPRESSOR 1	L1	_____	L2	_____	L3	_____
COMPRESSOR 2	L1	_____	L2	_____	L3	_____
INDOOR-FAN AMPS	L1	_____	L2	_____	L3	_____

TEMPERATURES

OUTDOOR-AIR TEMPERATURE	_____ DB	
RETURN-AIR TEMPERATURE	_____ DB	_____ WB
COOLING SUPPLY AIR	_____ DB	_____ WB

PRESSURES (Cooling Mode)

	Cir 1		Cir 2	
REFRIGERANT SUCTION	_____ PSIG	_____ F	_____ PSIG	_____ F
REFRIGERANT DISCHARGE	_____ PSIG	_____ F		

☐ VERIFY THAT 3-PHASE FAN MOTOR AND BLOWER ARE ROTATING IN CORRECT DIRECTION.

☐ VERIFY THAT 3-PHASE SCROLL COMPRESSORS ARE ROTATING IN THE CORRECT DIRECTION

☐ VERIFY REFRIGERANT CHARGE USING CHARGING CHARTS

GENERAL

☐ SET ECONOMIZER MINIMUM VENT AND CHANGEOVER SETTINGS TO MATCH JOB REQUIREMENTS (IF EQUIPPED)

Copyright 2013 Carrier Corp. • 7310 W. Morris St. • Indianapolis, IN 46231
Edition Date: 10/13

Catalog No:50LC07–12–01SM

Manufacturer reserves the right to change, at any time, specifications and designs without notice and without obligations.

Replaces: NEW