50TC
Single Package Rooftop
Cooling Only
Sizes 04 – 07 with Puron® (R–410A) Refrigerant

Carrier®
Turn to the Experts.℠

Installation Instructions

NOTE: Read the entire instruction manual before starting the installation

TABLE OF CONTENTS

SAFETY CONSIDERATIONS 1

INSTALLATION 3

Step 1 - Plan for Unit Location 3

Step 2 - Plan for Sequence of Unit Installation 3

Step 3 - Inspect unit 4

Step 4 - Provide Unit Support 4

Step 5 - Field Fabricate Ductwork 6

Step 6 - Rig and Place Unit 6

Step 7 - Convert to Horizontal and Connect Ductwork 7

Step 8 - Install Outside Air Hood 7

Step 9 - Install External Condensate Trap and Piping . 9

Step 10 - Make Electrical Connections 9

Step 11 - Adjust Factory-Installed Options 14

Step 12 - Install Accessories 14

SAFETY CONSIDERATIONS

Improper installation, adjustment, alteration, service, maintenance, or use can cause explosion, fire, electrical shock or other conditions which may cause personal injury or property damage. Consult a qualified installer, service agency, or your distributor or branch for information or assistance. The qualified installer or agency must use factory-authorized kits or accessories when modifying this product. Refer to the individual instructions packaged with the kits or accessories when installing.

Follow all safety codes. Wear safety glasses and work gloves. Use quenching cloths for brazing operations and have a fire extinguisher available. Read these instructions thoroughly and follow all warnings or cautions attached to the unit. Consult local building codes and appropriate national electrical codes (in USA, ANSI/NFPA 70, National Electrical Code (NEC); in Canada, CSA C22.1) for special requirements.

It is important to recognize safety information. This is the safety-alert symbol ⚠. When you see this symbol on the unit and in instructions or manuals, be alert to the potential for personal injury.

Understand the signal words DANGER, WARNING, CAUTION, and NOTE. These words are used with the safety-alert symbol. DANGER identifies the most serious hazards which **will** result in severe personal injury or death. WARNING signifies hazards which **could** result in personal injury or death. CAUTION is used to identify unsafe practices, which **may** result in minor personal injury or product and property damage. NOTE is used to highlight suggestions which **will** result in enhanced installation, reliability, or operation.

⚠ WARNING

ELECTRICAL SHOCK HAZARD

Failure to follow this warning could cause personal injury or death.

Before performing service or maintenance operations on unit, turn off main power switch to unit and install lockout tag. Ensure electrical service to rooftop unit agrees with voltage and amperage listed on the unit rating plate. Unit may have more than one power switch.

⚠ WARNING

UNIT OPERATION AND SAFETY HAZARD

Failure to follow this warning could cause personal injury, death and/or equipment damage.

Puron® (R-410A) refrigerant systems operate at higher pressures than standard R-22 systems. Do not use R-22 service equipment or components on Puron refrigerant equipment.

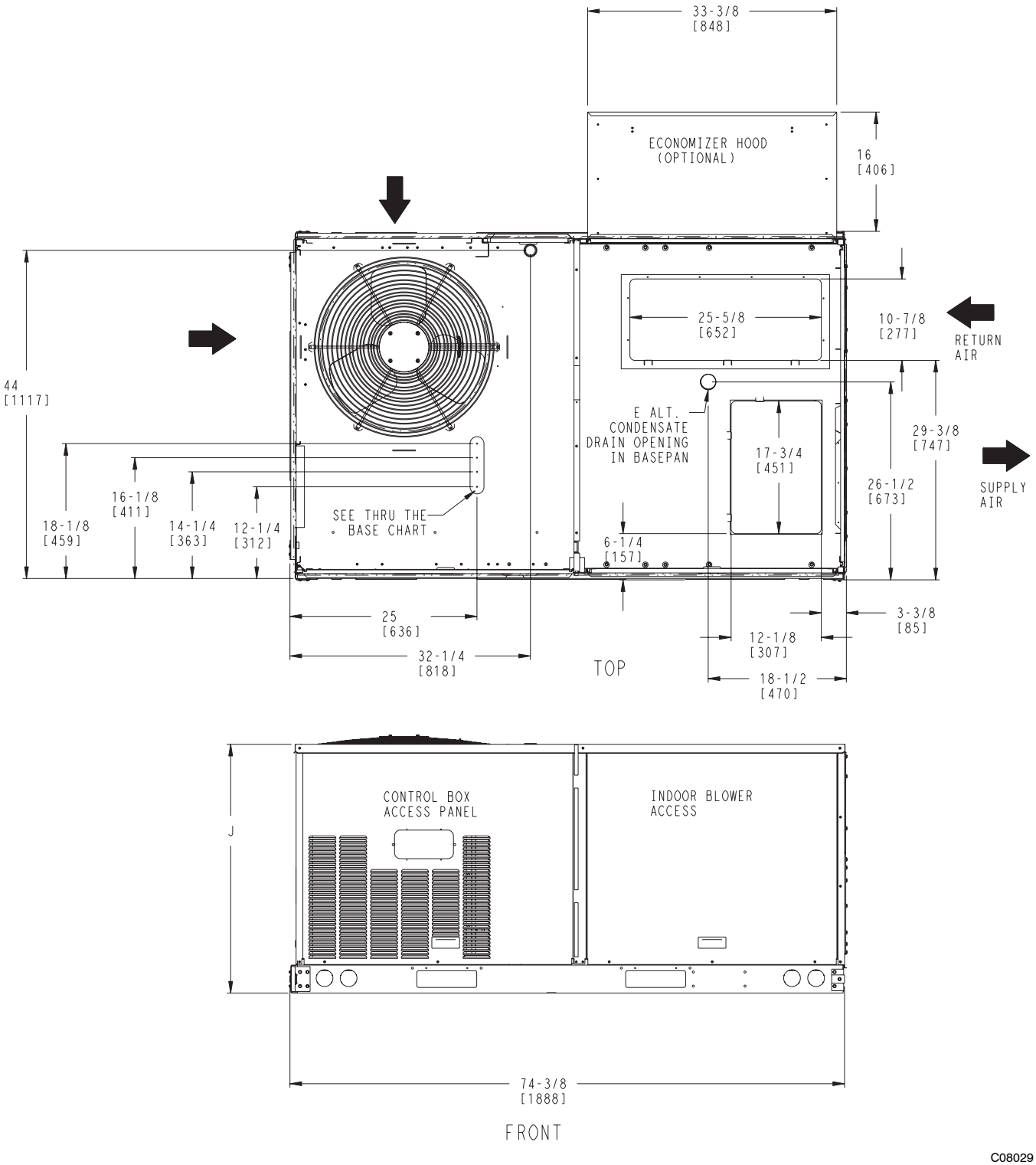

Fig. 1 - Dimensional Drawing

INSTALLATION

Jobsite Survey

Complete the following checks before installation.

1. Consult local building codes and the NEC (National Electrical Code) (ANSI/NFPA 70) for special installation requirements.
2. Determine unit location (from project plans) or select unit location.
3. Check for possible overhead obstructions which may interfere with unit lifting or rigging.

Step 1 — Plan for Unit Location

Select a location for the unit and its support system (curb or other) that provides for minimum clearances required for safety (including clearance to combustible surfaces), unit performance and service access below, around and above unit as specified in unit drawings. See Fig. 2.

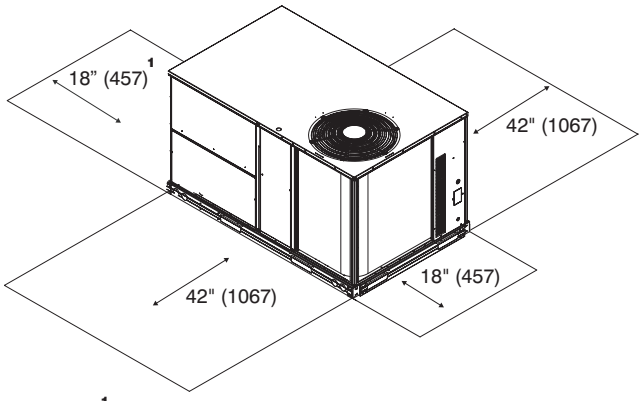

[1] Required bottom condensate drain connection. Otherwise, 36" (914mm) for condensate connection.

C07459

Fig. 2 - Service Clearance Dimensional Drawing

NOTE: Consider also the effect of adjacent units.

Unit may be installed directly on wood flooring or on Class A, B, or C roof-covering material when roof curb is used.

Do not install unit in an indoor location. Do not locate air inlets near exhaust vents or other sources of contaminated air.

Although unit is weatherproof, avoid locations that permit water from higher level runoff and overhangs to fall onto unit.

Select a unit mounting system that provides adequate height to allow installation of condensate trap per requirements. Refer to Step 9 — Install External Trap for Condensate Drain – for required trap dimensions.

Roof mount —

Check building codes for weight distribution requirements. Unit operating weight is shown in Table 1.

Step 2 — Plan for Sequence of Unit Installation

The support method used for this unit will dictate different sequences for the steps of unit installation. For example, on curb-mounted units, some accessories must be installed on the unit before the unit is placed on the curb. Review the following for recommended sequences for installation steps.

Curb-mounted installation —

Install curb

Install field-fabricated ductwork inside curb

Install accessory thru-base service connection package (affects curb and unit) (refer to accessory installation instructions for details)

Prepare bottom condensate drain connection to suit planned condensate line routing (refer to Step 9 for details)

Rig and place unit

Install outdoor air hood

Install condensate line trap and piping

Make electrical connections

Install other accessories

Table 1 – Operating Weights

50TC	UNITS LB (kg)			
Component	A04	A05	A06	A07
Base Unit	438 (199)	492 (223)	524 (238)	610 (277)
Economizer				
Vertical	50 (23)	50 (23)	50 (23)	50 (23)
Horizontal	80 (36)	80 (36)	80 (36)	80 (36)
Cu Fins	25 (11)	43 (11)	56 (25)	73 (33)
Powered Outlet	32 (15)	32 (15)	32 (15)	32 (15)
Curb				
14–in/356 mm	110 (50)	110 (50)	110 (50)	110 (50)
24–in/610 mm	145 (66)	145 (66)	145 (66)	145 (66)

Curb-mounted installation —

Install curb

Install field-fabricated ductwork inside curb

Install accessory thru-base service connection package (affects curb and unit) (refer to accessory installation instructions for details)

Prepare bottom condensate drain connection to suit planned condensate line routing (refer to Step 9 for details)

Rig and place unit

Install outdoor air hood

Install condensate line trap and piping

Make electrical connections

Install other accessories

Pad-mounted installation —

Prepare pad and unit supports

Check and tighten the bottom condensate drain connection plug

Rig and place unit

Convert unit to side duct connection arrangement

Install field-fabricated ductwork at unit duct openings

Install outdoor air hood

Install condensate line trap and piping

Make electrical connections

Install other accessories

Frame-mounted installation —

Frame-mounted applications generally follow the sequence for a curb installation. Adapt as required to suit specific installation plan.

Step 3 — Inspect unit

Inspect unit for transportation damage. File any claim with transportation agency.

Confirm before installation of unit that voltage, amperage and circuit protection requirements listed on unit data plate agree with power supply provided.

Step 4 — Provide Unit Support

Roof Curb Mount

Accessory roof curb details and dimensions are shown in Fig. 3. Assemble and install accessory roof curb in accordance with instructions shipped with the curb.

Curb should be level. This is necessary for unit drain to function properly. Unit leveling tolerances are shown in Fig. 4. Refer to Accessory Roof Curb Installation Instructions for additional information as required.

Install insulation, cant strips, roofing felt, and counter flashing as shown. *Ductwork must be attached to curb and not to the unit. The accessory thru-the-base power and gas connection package must be installed before the unit is set on the roof curb.*

If electric and control wiring is to be routed through the basepan, attach the accessory thru-the-base service connections to the basepan in accordance with the accessory installation instructions.

NOTE: The gasketing of the unit to the roof curb is critical for a watertight seal. Install gasket supplied with the roof curb as shown in Fig. 3. Improperly applied gasket can also result in air leaks and poor unit performance.

Slab Mount (Horizontal Units Only)

Provide a level concrete slab that extends a minimum of 6 in. (150 mm) beyond unit cabinet. Install a gravel apron in front of condenser coil air inlet to prevent grass and foliage from obstructing airflow.

NOTE: Horizontal units may be installed on a roof curb if required.

Alternate Unit Support (Curb or Slab Mount)

A non-combustible sleeper rail can be used in the unit curb support area. If sleeper rails cannot be used, support the long sides of the unit with a minimum of 3 equally spaced 4-in. x 4-in. (102 mm x 102 mm) pads on each side.

CONNECTOR PKG. ACCY.	B	C	D ALT DRAIN HOLE	POWER	CONTROL	ACCESSORY POWER
CRBTMPWR003A01	1 -9 11/16 [551]	1 -4 [406]	1 3/4 [44.5]	3/4 [19] NPT	1/2 [12.7] NPT	1/2 [12.7] NPT
CRBTMPWR004A01				1 1/4 [31.7]		

ROOF CURB ACCESSORY	A	UNIT SIZE
CRRFCURB001A01	1 -2 [356]	50TC A04-A07
CRRFCURB002A01	2 -0 [610]	

NOTES:
1. Roof curb accessory is shipped disassembled.
2. Insulated panels.
3. Dimensions in [ ] are in millimeters.
4. Roof curb: galvanized steel.
5. Attach ductwork to curb (flanges of duct rest on curb).
6. Service clearance: 4 ft on each side.
7. Direction of airflow.

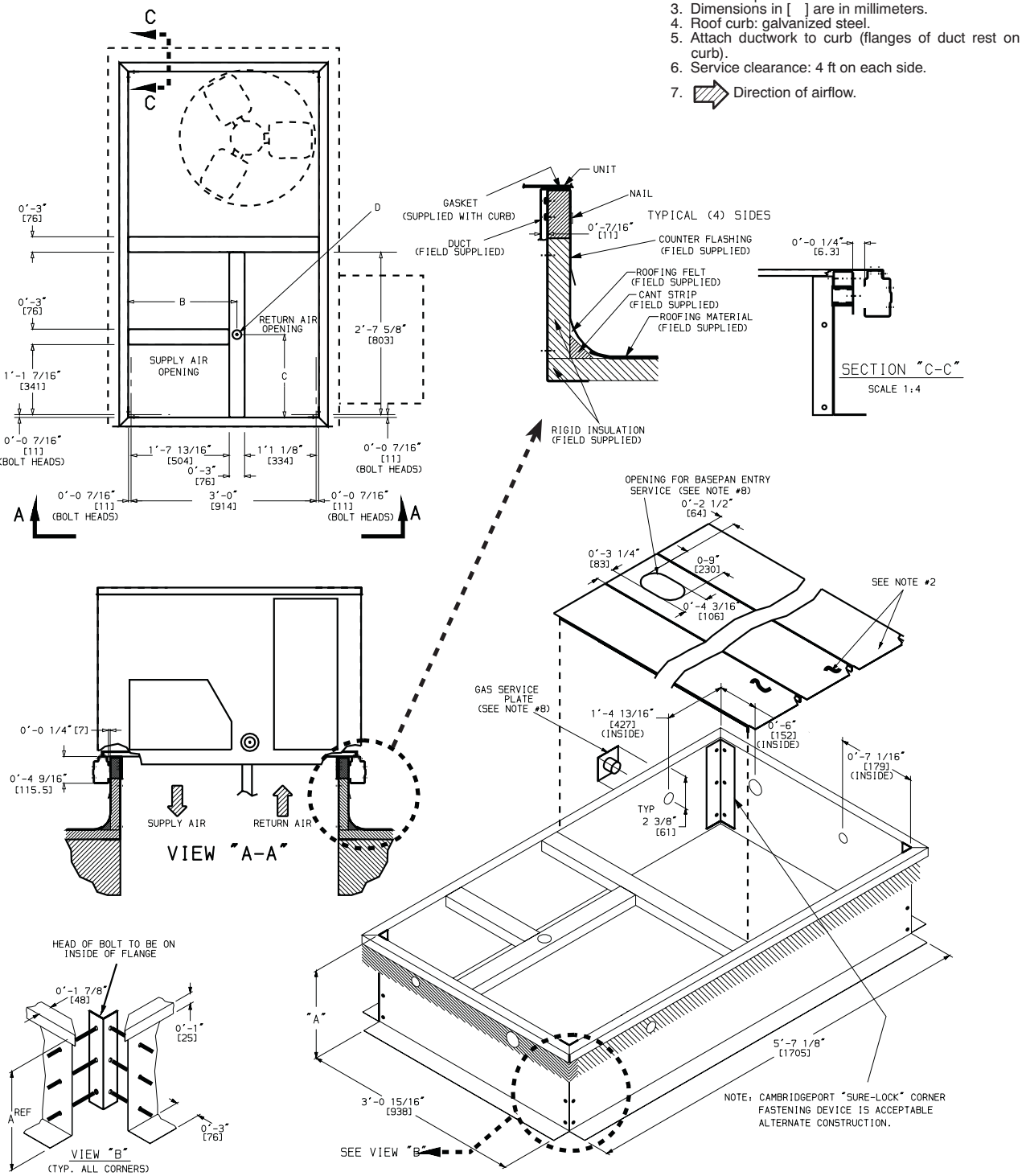

Fig. 3 - Roof Curb Details

50TC

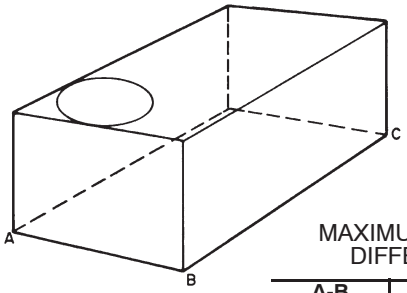

MAXIMUM ALLOWABLE DIFFERENCE IN. (MM)

A-B	B-C	A-C
0.5” (13)	1.0” (25)	1.0” (25)

C06110

Fig. 4 - Unit Leveling Tolerances

50TC

Step 5 — Field Fabricate Ductwork

Cabinet return-air static pressure (a negative condition) shall not exceed 0.35 in. wg (87 Pa) with economizer or 0.45 in. wg (112 Pa) without economizer.

For vertical ducted applications, secure all ducts to roof curb and building structure on vertical ducted units. *Do not connect ductwork to unit.*

Insulate and weatherproof all external ductwork, joints, and roof openings with counter flashing and mastic in accordance with applicable codes.

Ducts passing through unconditioned spaces must be insulated and covered with a vapor barrier.

If a plenum return is used on a vertical unit, the return should be ducted through the roof deck to comply with applicable fire codes.

For units with accessory electric heaters: Horizontal applications require a minimum clearance to combustible surfaces of 1-in (25 mm) from duct for first 12-in (305 mm) away from unit. Vertical applications do not require a minimum clearance around ductwork

Step 6 — Rig and Place Unit

Keep unit upright and do not drop. Spreader bars are not required if top crating is left on unit. Rollers may be used to move unit across a roof. Level by using unit frame as a reference. See Table 1 and Fig. 5 for additional information.

Lifting holes are provided in base rails as shown in Fig. 5. Refer to rigging instructions on unit.

Before setting the unit onto the curb, recheck gasketing on curb.

⚠ CAUTION

UNIT DAMAGE HAZARD

Failure to follow this caution may result in equipment damage.

All panels must be in place when rigging. Unit is not designed for handling by fork truck.

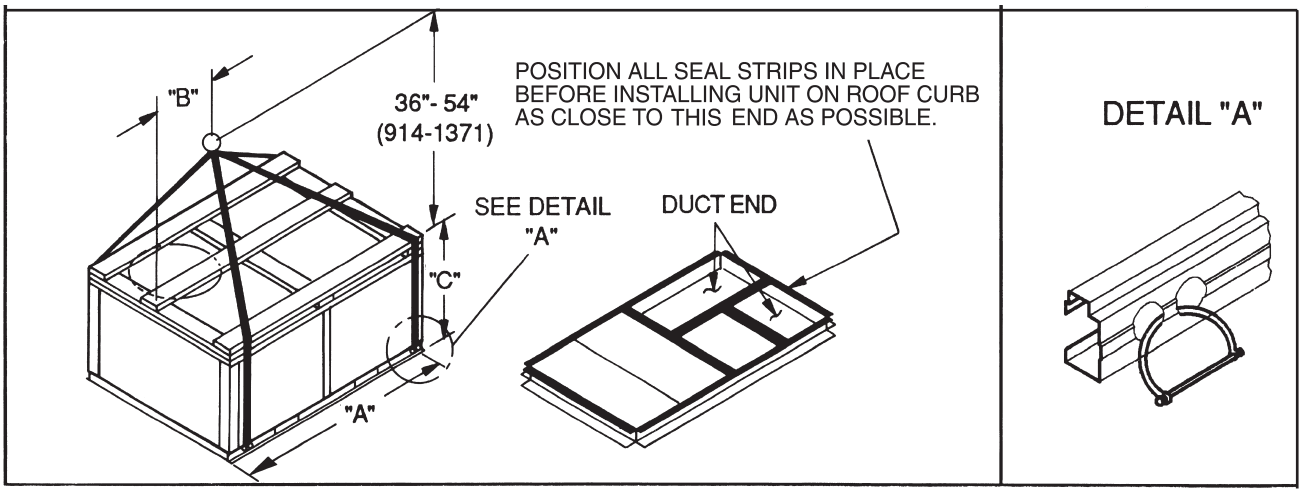

C06005

Fig. 5 - Rigging Details

UNIT	MAX WEIGHT		DIMENSION					
			A		B		C	
	LB	KG	IN	MM	IN	MM	IN	MM
50TC–A04	475	215	74.38	1888	38	965	33.38	848
50TC–A05	530	240	74.38	1888	38	965	33.38	848
50TC–A06	560	254	74.38	1888	38	965	33.38	848
50TC–A07	645	293	74.38	1888	38	965	41.38	1051

NOTES:

1. Dimensions in ( ) are in millimeters.
2. Hook rigging shackles through holes in base rail, as shown in detail “A”. Holes in base rails are centered around the unit center of gravity. Use wooden top to prevent rigging straps from damaging unit.
3. Unit weights do not include economizer.

Positioning on Curb —

Position unit on roof curb so that the following clearances are maintained: 1/4 in. (6.4 mm) clearance between the roof curb and the base rail inside the front and rear, 0.0 in. clearance between the roof curb and the base rail inside on the duct end of the unit. This will result in the distance between the roof curb and the base rail inside on the condenser end of the unit being approximately equal to Fig. 3, section C-C.

Although unit is weatherproof, guard against water from higher level runoff and overhangs.

⚠ CAUTION

UNIT DAMAGE HAZARD

Failure to follow this caution may result in equipment damage.

All panels must be in place when rigging. Unit is not designed for handling by fork truck.

After unit is in position, remove rigging skids and shipping materials.

Step 7 — Convert to Horizontal and Connect Ductwork (when required)

Unit is shipped in the vertical duct configuration. Unit without factory-installed economizer or return air smoke detector option may be field-converted to horizontal ducted configuration. To convert to horizontal configuration, remove screws from side duct opening covers and remove covers. Using the same screws, install covers on vertical duct openings with the insulation-side down. Seals around duct openings must be tight. See Fig. 6.

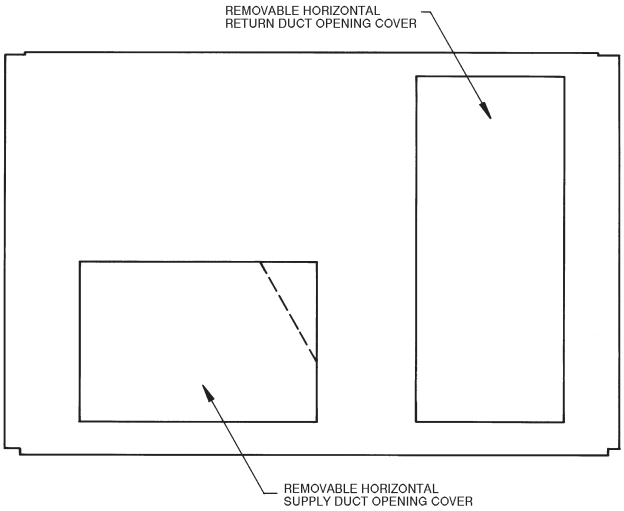

Fig. 6 - Horizontal Conversion Panels

Field-supplied flanges should be attached to horizontal duct openings and all ductwork should be secured to the flanges. Insulate and weatherproof all external ductwork, joints, and roof or building openings with counter flashing and mastic in accordance with applicable codes.

Do not cover or obscure visibility to the unit's informative data plate when insulating horizontal ductwork.

Step 8 — Install Outside Air Hood

The outdoor hood components are shipped in a box located in the unit return air compartment behind the outdoor-air opening access panel (or economizer). Access is through the filter access panel. See Fig. 7.

1. To remove the existing unit filter access panel, raise the panel and swing the bottom outward. The panel is now disengaged from the track and can be removed.
2. To remove the component box from its shipping position, remove the screw holding the hood box bracket to the top of the economizer. Slide the hood box out of the unit. See Fig. 8.

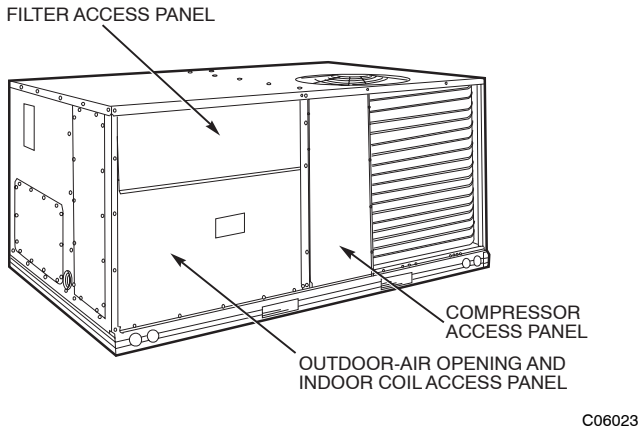

Fig. 7 - Typical Access Panel Locations

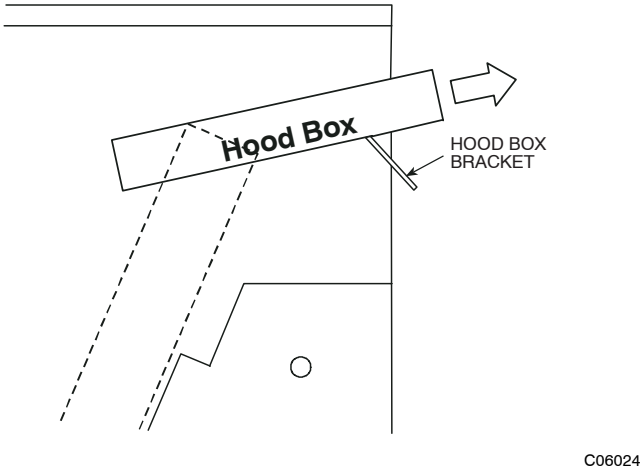

Fig. 8 - Hood Box Removal

Motorized 2-Position Damper Hood —

1. Assemble outdoor-air hood top and side plates as shown in Fig. 9. Install seal strips on hood top and sides. Put aside screen retainer and screws for later assembly.
2. Fasten hood top and side plate assembly to unit with screws provided.
3. Slide outdoor-air screen into screen track on hood side plates. While holding screen in place, fasten screen retainer to hood using screws provided.
4. Replace filter access panel. See Fig. 7.

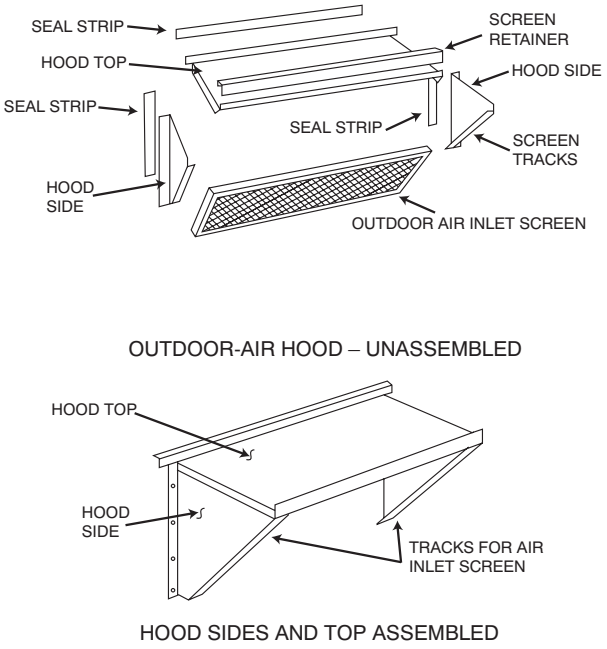

Fig. 9 - Outdoor-Air Hood Details

Economizer Hood —

NOTE: If the power exhaust accessory is to be installed on the unit, the hood shipped with the unit will not be used and must be discarded. Save the aluminum filter for use in the power exhaust hood assembly.

1. The indoor coil access panel will be used as the top of the hood. Remove the screws along the sides and bottom of the indoor coil access panel. See Fig. 10.
2. Swing out indoor coil access panel and insert the hood sides under the panel (hood top). Use the screws provided to attach the hood sides to the hood top. Use screws provided to attach the hood sides to the unit. See Fig. 11.
3. Remove the shipping tape holding the economizer barometric relief damper in place.
4. Insert the hood divider between the hood sides. See Fig. 11 and 12. Secure hood divider with 2 screws on each hood side. The hood divider is also used as the bottom filter rack for the aluminum filter.
5. Open the filter clips which are located underneath the hood top. Insert the aluminum filter into the bottom filter rack (hood divider). Push the filter into position past the open filter clips. Close the filter clips to lock the filter into place. See Fig. 12.
6. Caulk the ends of the joint between the unit top panel and the hood top. See Fig. 10.
7. Replace the filter access panel.

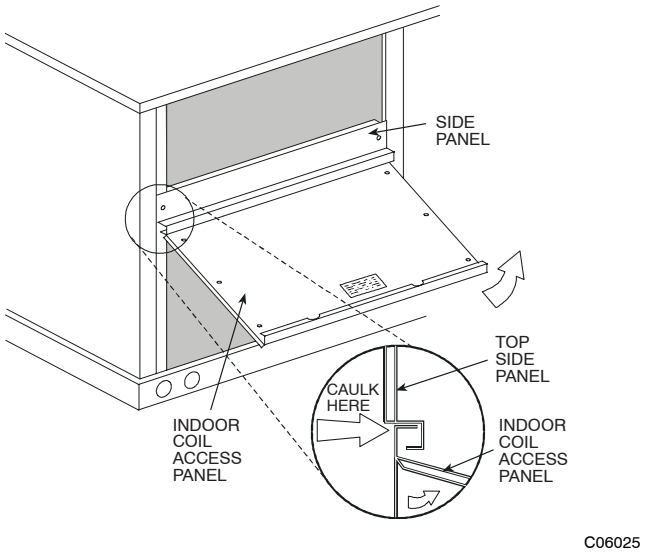

Fig. 10 - Indoor Coil Access Panel Relocation

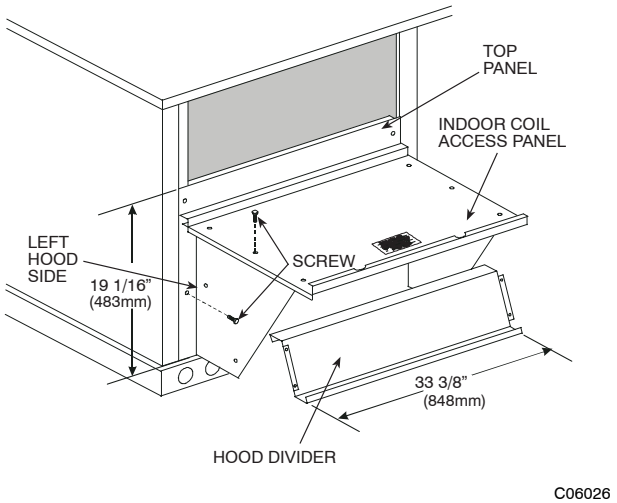

Fig. 11 - Economizer Hood Construction

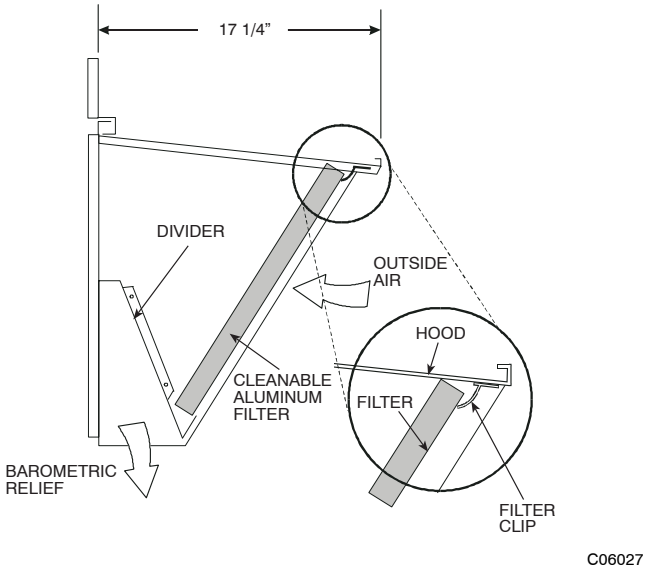

Fig. 12 - Economizer Hood Filter Installation

Step 9 — Install External Condensate Trap and Line

The unit has one $^3/_4$-in. condensate drain connection on the bottom and another on the side of the unit. Unit duct application does not determine the use of drain connections. Either drain connection can be used with vertical or horizontal applications.

When using the standard side drain connection, make sure the red plug in the alternate bottom connection is tight before installing the unit.

To use the bottom drain connection for a roof curb installation, relocate the factory-installed red plug from the bottom connection to the side connection. The center drain plug looks like a star connection, however it can be removed with a 1/2-in. square socket drive extension. See Fig. 12. The piping for the condensate drain and external trap can be completed after the unit is in place. See Fig. 13.

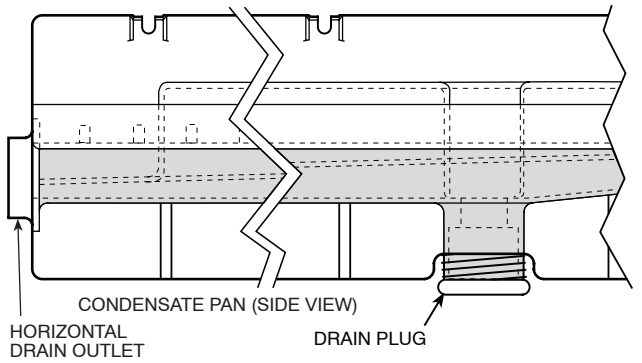

NOTE: Drain plug is shown in factory-installed position.

C06003

Fig. 13 - Condensate Drain Pan (Side View)

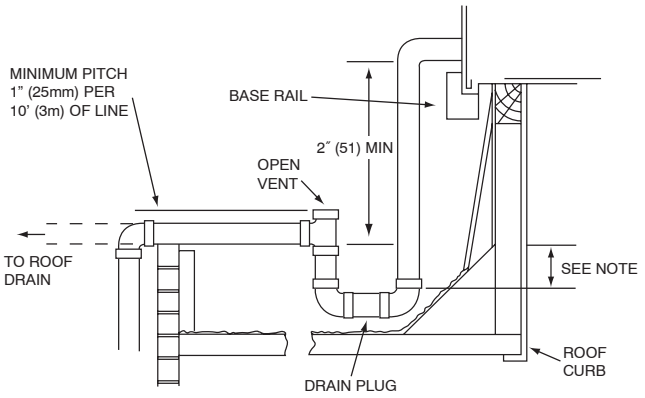

NOTE: Trap should be deep enough to offset maximum unit static difference. A 4" (102) trap is recommended

C08022

Fig. 14 - Condensate Drain Piping Details

All units must have an external trap for condensate drainage. Install a trap at least 4-in. (102 mm) deep and protect against freeze-up. If drain line is installed downstream from the external trap, pitch the line away from the unit at 1-in. per 10 ft (25 mm in 3 m) of run. Do not use a pipe size smaller than the unit connection ($^3/_4$-in.).

Step 10 — Make Electrical Connections

⚠ WARNING

ELECTRICAL SHOCK HAZARD

Failure to follow this warning could result in personal injury or death.

Unit cabinet must have an uninterrupted, unbroken electrical ground to minimize the possibility of personal injury if an electrical fault should occur. This ground may consist of electrical wire connected to unit ground lug in control compartment, or conduit approved for electrical ground when installed in accordance with NEC; ANSI/NFPA 70, latest edition (in Canada, Canadian Electrical Code CSA [Canadian Standards Association] C22.1), and local electrical codes.

Field Power Supply —

If equipped with optional Powered Convenience Outlet: The power source leads to the convenience outlet's transformer primary are not factory connected. Installer must connect these leads according to required operation of the convenience outlet. If an always-energized convenience outlet operation is desired, connect the source leads to the line side of the unit-mounted disconnect. (Check with local codes to ensure this method is acceptable in your area.) If a de-energize via unit disconnect switch operation of the convenience outlet is desired, connect the source leads to the load side of the unit disconnect. On a unit without a unit-mounted disconnect, connect the source leads to compressor contactor C and indoor fan contactor IFC pressure lugs with unit field power leads.

All units except 208/230-v units are factory wired for the voltage shown on the nameplate. *If the 208/230-v unit is to be connected to a 208-v power supply, the control transformer must be rewired by moving the black wire with the $^1/_4$-in. female spade connector from the 230-v connection and moving it to the 200-v $^1/_4$-in. male terminal on the primary side of the transformer.* Refer to unit label diagram for additional information.

Field power wires are connected to the unit at line-side pressure lugs on compressor contactor C and indoor fan contactor IFC (see wiring diagram label for control box component arrangement) or at factory-installed option non-fused disconnect switch. Max wire size is #2 AWG (copper only).

NOTE: TEST LEADS

Unit may be equipped with short leads (pigtails) on the field line connection points on contactor C or optional disconnect switch. These leads are for factory run-test purposes only; remove and discard before connecting field power wires to unit connection points. Make field power connections directly to line connection pressure lugs only.

Units Without Factory-Installed Disconnect —

When installing units, provide a disconnect switch per NEC (National Electrical Code) of adequate size. Disconnect sizing data is provided on the unit informative plate. Locate on unit cabinet or within sight of the unit per national or local codes. Do not cover unit informative plate if mounting the disconnect on the unit cabinet.

Units with Factory-Installed Disconnect —

The factory-installed option disconnect switch is located in a weatherproof enclosure located under the main control box. The manual switch handle is accessible through an opening in the access panel.

All units —

All field wiring must comply with NEC and all local codes. Size wire based on MCA (Minimum Circuit Amps) on the unit informative plate. See Fig. 14 for power wiring connections to the unit power terminal block and equipment ground. Maximum wire size is #2 ga AWG per pole.

Provide a ground-fault and short-circuit over current protection device (fuse or breaker) per NEC Article 440 (or local codes). Refer to unit informative data plate for MOCP (Maximum Over current Protection) device size.

All field wiring must comply with the NEC and local requirements.

Factory-Option Thru-Base Connections —

This service connection kit consists of a 1/2-in electrical bulkhead connector and a 3/4-in electrical bulkhead connector, all factory-installed in the embossed (raised) section of the unit basepan in the condenser section. The 3/4-in bulkhead connector enables the low-voltage control wires to pass through the basepan. The 1/2-in electrical bulkhead connector allows the high-voltage power wires to pass through the basepan. See Fig. 15.

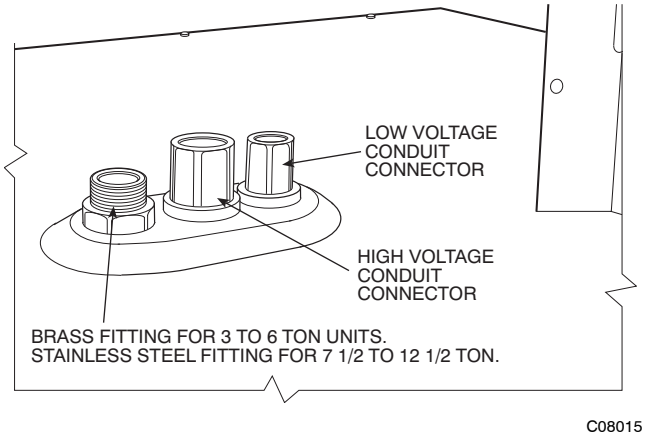

Fig. 15 - Fittings

Check tightness of connector lock nuts before connecting electrical conduits.

Field-supplied and field-installed liquid tight conduit connectors and conduit may be attached to the connectors on the basepan. Pull correctly rated high voltage and low voltage through appropriate conduits. Connect the power conduit to the internal disconnect (if unit is so equipped) or to the external disconnect (through unit side panel). A hole must be field cut in the main control box bottom on the left side so the 24-v control connections can be made. Connect the control power conduit to the unit control box at this hole.

Install field wiring as follows:

1. Install power wiring conduit through side panel openings. Install conduit between disconnect and control box.
2. Install power lines to terminal connections as shown in Fig. 16.

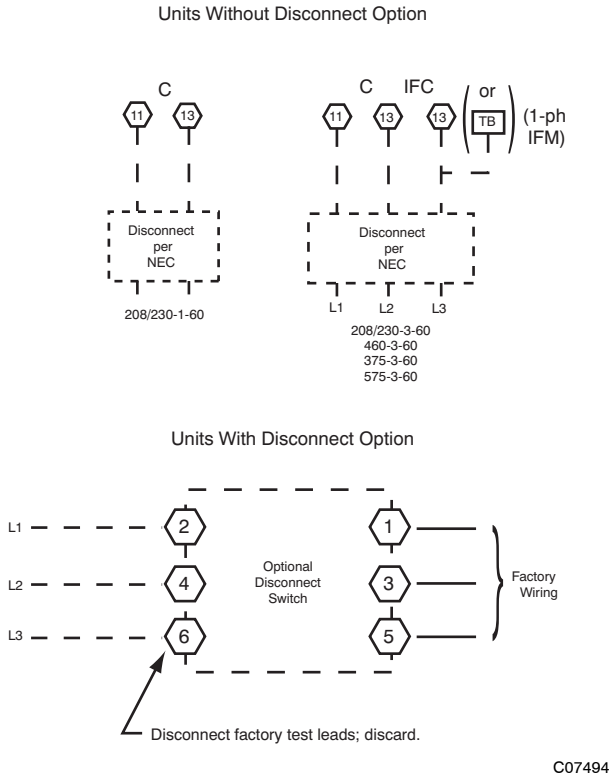

Fig. 16 - Power Wiring Connections

Voltage to compressor terminals during operation must be within voltage range indicated on unit nameplate. See Table 2. On 3-phase units, voltages between phases must be balanced within 2% and the current within 10%. Use the formula shown in the legend for Table 2, Note 2 to determine the percent of voltage imbalance. Operation on improper line voltage or excessive phase imbalance constitutes abuse and may cause damage to electrical components. Such operation would invalidate any applicable Carrier warranty.

Field Control Wiring —

The 50TC unit requires an external temperature control device. This device can be a thermostat (field-supplied) or a PremierLink™ controller (available as factory-installed option or as field-installed accessory, for use on a Carrier Comfort Network or as a standalone control) or a Local Equipment Interface (LEI) card that will communicate with a Building Management System

using non-CCN protocols (LEI card also available as factory-installed option or as field-installed accessory).

Thermostat —

Install a Carrier-approved accessory thermostat according to installation instructions included with the accessory. For complete economizer function, select a two-stage cooling thermostat. Locate the thermostat accessory on a solid wall in the conditioned space to sense average temperature in accordance with the thermostat installation instructions.

If the thermostat contains a logic circuit requiring 24-v power, use a thermostat cable or equivalent single leads of different colors with minimum of seven leads. If the thermostat does not require a 24-v source (no "C" connection required), use a thermostat cable or equivalent with minimum of six leads. Check the thermostat installation instructions for additional features which might require additional conductors in the cable.

For wire runs up to 50 ft. (15 m), use no. 18 AWG (American Wire Gage) insulated wire (35-deg C minimum). For 50 to 75 ft. (15 to 23 m), use no. 16 AWG insulated wire (35-deg C minimum). For over 75 ft. (23 m), use no. 14 AWG insulated wire (35-deg C minimum). All wire sizes larger than no. 18 AWG cannot be directly connected to the thermostat and will require a junction box and splice at the thermostat.

Units without Thru-Base Connections —

Pass the thermostat control wires through the hole provided in the corner post; then feed the wires through the raceway built into the corner post to the control box. Pull the wires over to the terminal strip on the upper-left corner of the Controls Connection Board. See Fig 18.

NOTE: If thru-the-base, connections accessory is used, refer to the accessory installation instructions for information on routing power and control wiring.

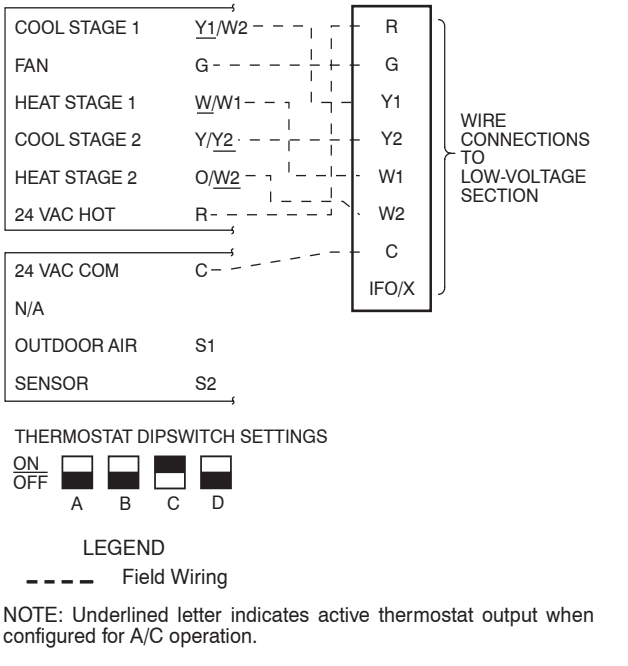

NOTE: Underlined letter indicates active thermostat output when configured for A/C operation.

C07102

Fig. 17 - Low-Voltage Connections

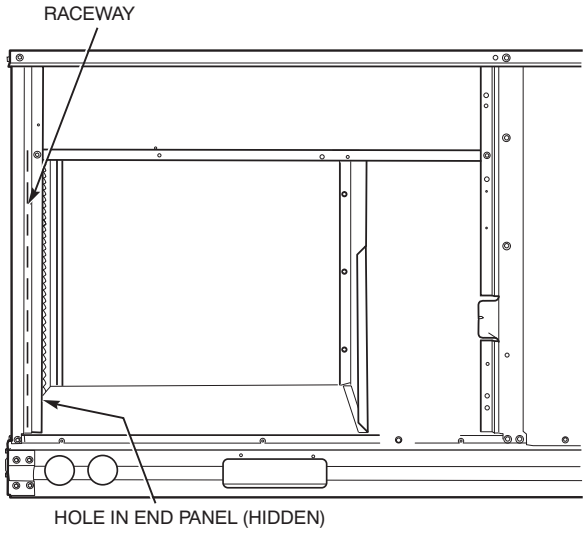

C08027

Fig. 18 - Field Control Wiring Raceway

Heat Anticipator Settings —

Set heat anticipator settings at 0.14 amp for the first stage and 0.14 amp for second-stage heating, when available.

PremierLink (Factory-Option) —

The PremierLink CCN-interface module will be factory-mounted in the main control box, to the left of the Controls Connection Board. Factory-harnesses will complete required wiring between PremierLink and unit wiring. Field connections to the PremierLink control will be made at a supplemental terminal strip located in the unit main box below the PremierLink board. (Additional details on installation of the PremierLink were unavailable at the time of the printing of this manual. Contact your Carrier distributor for latest information.)

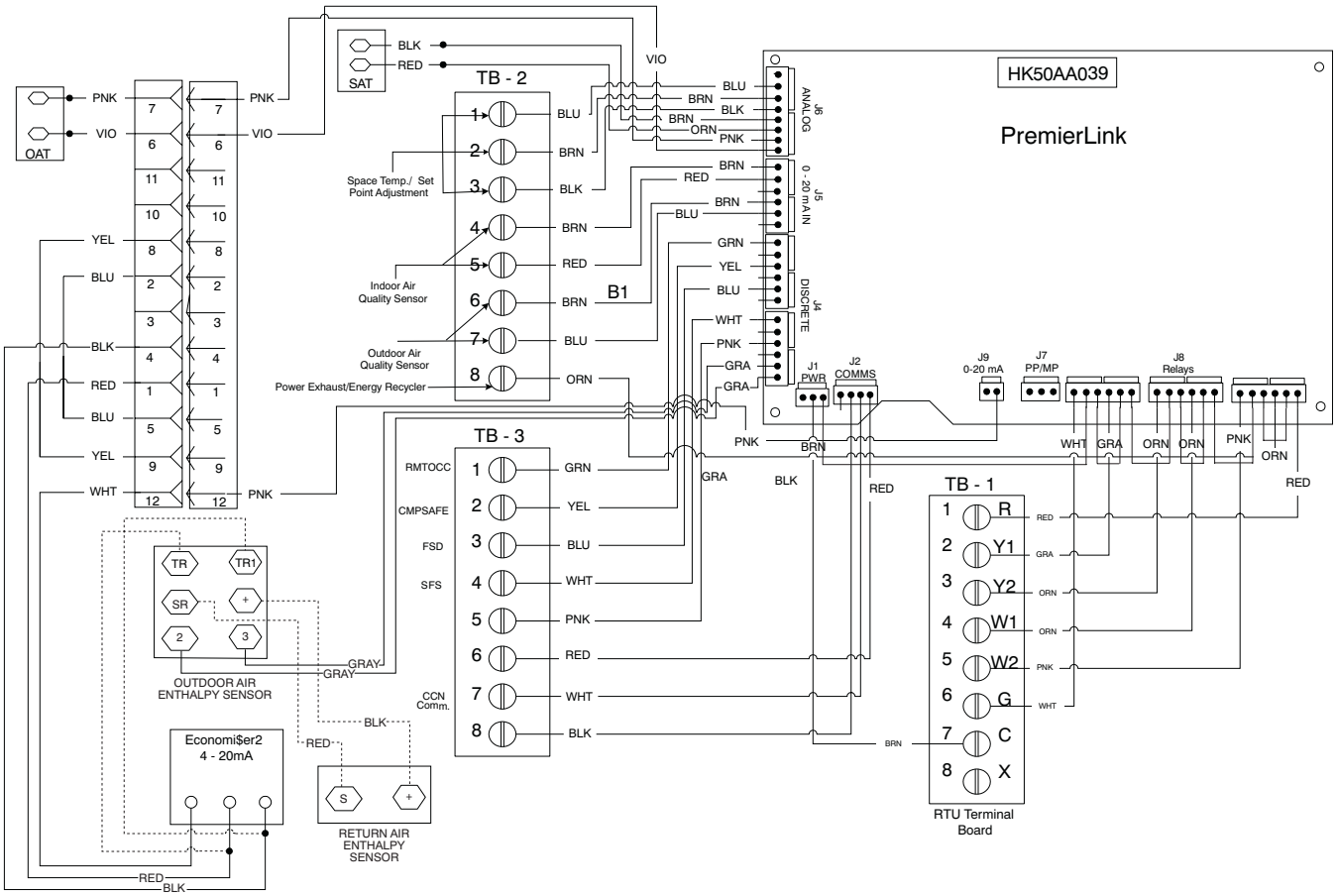

Fig. 19 – Typical PremierLink Controls Wiring

Table 2 – Unit Electrical Data

UNIT	NOM. V–PH–HZ	IFM TYPE	ELECTRIC HEATER PART NUMBER CRHEATERXXXXXX	NOM (kW)	APPLICATION (kW)	SINGLE POINT OR JUNCTION KIT PART NUMBER CRSINGLE***A00			
						NO C.O. or UNPWRD C.O.		w/PWRD C.O.	
						NO P.E.	w/ P.E. (pwrd fr/unit)	NO P.E.	w/ P.E. (pwrd fr/unit)
50TC**04	208/230–1–60	STD	101A00	4.4	3.3/4.0	–	–	–	–
			102A00	6.5	4.9/6.0	–	–	–	–
			103B00	8.7	6.5/8.0	–	–	–	–
			104B00	10.5	7.9/9.6	040	040	040	040
			102A00,102A00	13.0	9.8/11.9	040	040	040	040
		MED	101A00	4.4	3.3/4.0	–	–	–	–
			102A00	6.5	4.9/6.0	–	–	–	–
			103B00	8.7	6.5/8.0	–	–	–	–
			104B00	10.5	7.9/9.6	040	040	040	040
			102A00,102A00	13.0	9.8/11.9	040	040	040	040
	208/230–3–60	STD	101A00	4.4	3.3/4.0	–	–	–	–
			102A00	6.5	4.9/6.0	–	–	–	–
			103B00	8.7	6.5/8.0	–	–	–	–
			104B00	10.5	7.9/9.6	–	–	–	–
			105A00	16.0	12.0/14.7	–	–	038	038
		MED	101A00	4.4	3.3/4.0	–	–	–	–
			102A00	6.5	4.9/6.0	–	–	–	–
			103B00	8.7	6.5/8.0	–	–	–	–
			104B00	10.5	7.9/9.6	–	–	–	–
			105A00	16.0	12.0/14.7	–	–	038	038
		HIGH	101A00	4.4	3.3/4.0	–	–	–	–
			102A00	6.5	4.9/6.0	–	–	–	–
			103B00	8.7	6.5/8.0	–	–	–	–
			104B00	10.5	7.9/9.6	–	–	–	–
			105A00	16.0	12.0/14.7	–	–	038	038
	460–3–60	STD	106A00	6.0	5.5	–	–	–	–
			107A00	8.8	8.1	–	–	–	–
			108A00	11.5	10.6	–	–	–	–
			109A00	14.0	12.9	–	–	–	–
		MED	106A00	6.0	5.5	–	–	–	–
			107A00	8.8	8.1	–	–	–	–
			108A00	11.5	10.6	–	–	–	–
			109A00	14.0	12.9	–	–	–	–
		HIGH	106A00	6.0	5.5	–	–	–	–
			107A00	8.8	8.1	–	–	–	–
			108A00	11.5	10.6	–	–	–	–
			109A00	14.0	12.9	–	–	–	–

LEGEND:

CO – Convenient outlet
DISC – Disconnect
FLA – Full load amps
IFM – Indoor fan motor
LRA – Locked rotor amps
MCA – Minimum circuit amps
MOCP – Maximum over current protection
PE – Power exhaust
UNPWRD CO – Unpowered convenient outlet

NOTES:

1. In compliance with NEC requirements for multimotor and combination load equipment (refer to NEC Articles 430 and 440), the overcurrent protective device for the unit shall be fuse or HACR breaker. Canadian units may be fuse or circuit breaker.
2. **Unbalanced 3-Phase Supply Voltage**
   Never operate a motor where a phase imbalance in supply voltage is greater than 2%. Use the following formula to determine the percentage of voltage imbalance.

$$\% \text{ Voltage Imbalance} = 100 \times \frac{\text{max voltage deviation from average voltage}}{\text{average voltage}}$$

Example: Supply voltage is 230-3-60

AB = 224 v
BC = 231 v
AC = 226 v

$$\text{Average Voltage} = \frac{(224 + 231 + 226)}{3} = \frac{681}{3} = 227$$

Determine maximum deviation from average voltage.
(AB) 227 – 224 = 3 v . . . . . Maximum deviation is 4 v.
(BC) 231 – 227 = 4 v . . . . . Determine percent of voltage imbalance.

$$\% \text{ Voltage Imbalance} = 100 \times \frac{4}{227} = 1.76\%$$

This amount of phase imbalance is satisfactory as it is below the maximum allowable 2%.

IMPORTANT: If the supply voltage phase imbalance is more than 2%, contact your local electric utility company immediately.

50TC

Table 2 Unit Electrical Data (cont)

UNIT	NOM. V–PH–HZ	IFM TYPE	ELECTRIC HEATER PART NUMBER CRHEATERXXXXXX	NOM (kW)	APPLICATION (kW)	SINGLE POINT OR JUNCTION KIT PART NUMBER CRSINGLE***A00			
						NO C.O. or UNPWRD C.O.		w/PWRD C.O.	
						NO P.E.	w/ P.E. (pwrd fr/unit)	NO P.E.	w/ P.E. (pwrd fr/unit)
50TC**05	208/230–1–60	STD	101A00	4.4	3.3/4.0	–	–	–	–
			103B00	8.7	6.5/8.0	–	–	–	–
			102A00,102A00	13.0	9.8/11.9	040	040	040	040
			103B00,103B00	17.4	13.1/16.0	040	040	040	040
			104B00,104B00	21.0	15.8/19.3	040	040	040	040
		MED	101A00	4.4	3.3/4.0	–	–	–	–
			103B00	8.7	6.5/8.0	–	–	–	–
			102A00,102A00	13.0	9.8/11.9	040	040	040	040
			103B00,103B00	17.4	13.1/16.0	040	040	040	040
			104B00,104B00	21.0	15.8/19.3	040	040	040	040
	208/230–3–60	STD	102A00	6.5	4.9/6.0	–	–	–	–
			103B00	8.7	6.5/8.0	–	–	–	–
			105A00	16.0	12.0/14.7	–	–	038	038
			104B00,104B00	21.0	15.8/19.3	038	038	038	038
		MED	102A00	6.5	4.9/6.0	–	–	–	–
			103B00	8.7	6.5/8.0	–	–	–	–
			105A00	16.0	12.0/14.7	–	–	038	038
			104B00,104B00	21.0	15.8/19.3	038	038	038	038
		HIGH	102A00	6.5	4.9/6.0	–	–	–	–
			103B00	8.7	6.5/8.0	–	–	–	–
			105A00	16.0	12.0/14.7	–	–	038	038
			104B00,104B00	21.0	15.8/19.3	038	038	038	038
	460–3–60	STD	106A00	6.0	5.5	–	–	–	–
			108A00	11.5	10.6	–	–	–	–
			109A00	14.0	12.9	–	–	–	–
			108A00,108A00	23.0	21.1	–	–	–	–
		MED	106A00	6.0	5.5	–	–	–	–
			108A00	11.5	10.6	–	–	–	–
			109A00	14.0	12.9	–	–	–	–
			108A00,108A00	23.0	21.1	–	–	–	–
		HIGH	106A00	6.0	5.5	–	–	–	–
			108A00	11.5	10.6	–	–	–	–
			109A00	14.0	12.9	–	–	–	–
			108A00,108A00	23.0	21.1	–	–	–	–

LEGEND:

CO – Convenient outlet
DISC – Disconnect
FLA – Full load amps
IFM – Indoor fan motor
LRA – Locked rotor amps
MCA – Minimum circuit amps
MOCP – Maximum over current protection
PE – Power exhaust
UNPWRD CO – Unpowered convenient outlet

NOTES:

1. In compliance with NEC requirements for multimotor and combination load equipment (refer to NEC Articles 430 and 440), the overcurrent protective device for the unit shall be fuse or HACR breaker. Canadian units may be fuse or circuit breaker.
2. **Unbalanced 3-Phase Supply Voltage**
   Never operate a motor where a phase imbalance in supply voltage is greater than 2%. Use the following formula to determine the percentage of voltage imbalance.

$$\% \text{ Voltage Imbalance} = 100 \times \frac{\text{max voltage deviation from average voltage}}{\text{average voltage}}$$

Example: Supply voltage is 230-3-60

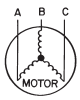

AB = 224 v
BC = 231 v
AC = 226 v

$$\text{Average Voltage} = \frac{(224 + 231 + 226)}{3} = \frac{681}{3} = 227$$

Determine maximum deviation from average voltage.
(AB) 227 – 224 = 3 v . . . . . Maximum deviation is 4 v.
(BC) 231 – 227 = 4 v . . . . . Determine percent of voltage imbalance.

$$\% \text{ Voltage Imbalance} = 100 \times \frac{4}{227} = 1.76\%$$

This amount of phase imbalance is satisfactory as it is below the maximum allowable 2%.

IMPORTANT: If the supply voltage phase imbalance is more than 2%, contact your local electric utility company immediately.

Table 2 Unit Electrical Data (cont)

UNIT	NOM. V–PH–HZ	IFM TYPE	ELECTRIC HEATER PART NUMBER CRHEATERXXXXXX	NOM (kW)	APPLICATION (kW)	SINGLE POINT OR JUNCTION KIT PART NUMBER CRSINGLE***A00			
						NO C.O. or UNPWRD C.O.		w/PWRD C.O.	
						NO P.E.	w/ P.E. (pwrd fr/unit)	NO P.E.	w/ P.E. (pwrd fr/unit)
50TC**06	208/230–1–60	STD	102A00	6.5	4.9/6.0	–	–	–	–
			103B00	8.7	6.5/8.0	–	–	–	–
			102A00,102A00	13.0	9.8/11.9	040	040	040	040
			103B00,103B00	17.4	13.1/16.0	040	040	040	040
			104B00,104B00	21.0	15.8/19.3	040	040	040	040
		MED	102A00	6.5	4.9/6.0	–	–	–	–
			103B00	8.7	6.5/8.0	–	–	040	040
			102A00,102A00	13.0	9.8/11.9	040	040	040	040
			103B00,103B00	17.4	13.1/16.0	040	040	040	040
			104B00,104B00	21.0	15.8/19.3	040	040	040	040
	208/230–3–60	STD	102A00	6.5	4.9/6.0	–	–	–	–
			104B00	10.5	7.9/9.6	–	–	–	–
			105A00	16.0	12.0/14.7	–	–	038	038
			104B00,104B00	21.0	15.8/19.3	038	038	038	038
			104B00,105A00	26.5	19.9/24.3	038	038	038	038
		MED	102A00	6.5	4.9/6.0	–	–	–	–
			104B00	10.5	7.9/9.6	–	–	–	–
			105A00	16.0	12.0/14.7	–	–	038	038
			104B00,104B00	21.0	15.8/19.3	038	038	038	038
			104B00,105A00	26.5	19.9/24.3	038	038	038	038
		HIGH	102A00	6.5	4.9/6.0	–	–	–	–
			104B00	10.5	7.9/9.6	–	–	–	–
			105A00	16.0	12.0/14.7	–	–	038	038
			104B00,104B00	21.0	15.8/19.3	038	038	038	038
			104B00,105A00	26.5	19.9/24.3	038	038	038	038
	460–3–60	STD	106A00	6.0	5.5	–	–	–	–
			108A00	11.5	10.6	–	–	–	–
			109A00	14.0	12.9	–	–	–	–
			108A00,108A00	23.0	21.1	–	–	–	–
			108A00,109A00	25.5	23.4	–	–	–	–
		MED	106A00	6.0	5.5	–	–	–	–
			108A00	11.5	10.6	–	–	–	–
			109A00	14.0	12.9	–	–	–	–
			108A00,108A00	23.0	21.1	–	–	–	–
			108A00,109A00	25.5	23.4	–	–	–	–
		HIGH	106A00	6.0	5.5	–	–	–	–
			108A00	11.5	10.6	–	–	–	–
			109A00	14.0	12.9	–	–	–	–
			108A00,108A00	23.0	21.1	–	–	–	–
			108A00,109A00	25.5	23.4	–	–	–	–

LEGEND:

CO – Convenient outlet
DISC – Disconnect
FLA – Full load amps
IFM – Indoor fan motor
LRA – Locked rotor amps
MCA – Minimum circuit amps
MOCP – Maximum over current protection
PE – Power exhaust
UNPWRD CO – Unpowered convenient outlet

NOTES:

1. In compliance with NEC requirements for multimotor and combination load equipment (refer to NEC Articles 430 and 440), the overcurrent protective device for the unit shall be fuse or HACR breaker. Canadian units may be fuse or circuit breaker.
2. **Unbalanced 3-Phase Supply Voltage**
   Never operate a motor where a phase imbalance in supply voltage is greater than 2%. Use the following formula to determine the percentage of voltage imbalance.

$$\text{\% Voltage Imbalance} = 100 \times \frac{\text{max voltage deviation from average voltage}}{\text{average voltage}}$$

Example: Supply voltage is 230-3-60

AB = 224 v
BC = 231 v
AC = 226 v

$$\text{Average Voltage} = \frac{(224 + 231 + 226)}{3} = \frac{681}{3} = 227$$

Determine maximum deviation from average voltage.
(AB) 227 – 224 = 3 v . . . . . Maximum deviation is 4 v.
(BC) 231 – 227 = 4 v . . . . . Determine percent of voltage imbalance.

$$\text{\% Voltage Imbalance} = 100 \times \frac{4}{227} = 1.76\%$$

This amount of phase imbalance is satisfactory as it is below the maximum allowable 2%.

IMPORTANT: If the supply voltage phase imbalance is more than 2%, contact your local electric utility company immediately.

Table 2 Unit Electrical Data (cont)

UNIT	NOM. V–PH–HZ	IFM TYPE	ELECTRIC HEATER PART NUMBER CRHEATERXXXXXX	NOM (kW)	APPLICATION (kW)	SINGLE POINT OR JUNCTION KIT PART NUMBER CRSINGLE***A00			
						NO C.O. or UNPWRD C.O.		w/PWRD C.O.	
						NO P.E.	w/ P.E. (pwrd fr/unit)	NO P.E.	w/ P.E. (pwrd fr/unit)
50TC**07	208/230–3–60	STD	102A00	6.5	4.9/6.0	–	–	–	–
			104B00	10.5	7.9/9.6	–	–	–	–
			105A00	16.0	12.0/14.7	–	–	038	038
			104B00,104B00	21.0	15.8/19.3	038	038	038	038
			104B00,105A00	26.5	19.9/24.3	038	038	038	038
		MED	102A00	6.5	4.9/6.0	–	–	–	–
			104B00	10.5	7.9/9.6	–	–	–	–
			105A00	16.0	12.0/14.7	–	–	038	038
			104B00,104B00	21.0	15.8/19.3	038	038	038	038
			104B00,105A00	26.5	19.9/24.3	038	038	038	038
		HIGH	102A00	6.5	4.9/6.0	–	–	–	–
			104B00	10.5	7.9/9.6	–	–	–	–
			105A00	16.0	12.0/14.7	–	–	038	038
			104B00,104B00	21.0	15.8/19.3	038	038	038	038
			104B00,105A00	26.5	19.9/24.3	038	038	038	038
	460–3–60	STD	106A00	6.0	5.5	–	–	–	–
			108A00	11.5	10.6	–	–	–	–
			109A00	14.0	12.9	–	–	–	–
			108A00,108A00	23.0	21.1	–	–	–	–
			108A00,109A00	25.5	23.4	–	–	–	–
		MED	106A00	6.0	5.5	–	–	–	–
			108A00	11.5	10.6	–	–	–	–
			109A00	14.0	12.9	–	–	–	–
			108A00,108A00	23.0	21.1	–	–	–	–
			108A00,109A00	25.5	23.4	–	–	–	–
		HIGH	106A00	6.0	5.5	–	–	–	–
			108A00	11.5	10.6	–	–	–	–
			109A00	14.0	12.9	–	–	–	–
			108A00,108A00	23.0	21.1	–	–	–	–
			108A00,109A00	25.5	23.4	–	–	–	–

LEGEND:

CO – Convenient outlet
DISC – Disconnect
FLA – Full load amps
IFM – Indoor fan motor
LRA – Locked rotor amps
MCA – Minimum circuit amps
MOCP – Maximum over current protection
PE – Power exhaust
UNPWRD CO – Unpowered convenient outlet

NOTES:

1. In compliance with NEC requirements for multimotor and combination load equipment (refer to NEC Articles 430 and 440), the overcurrent protective device for the unit shall be fuse or HACR breaker. Canadian units may be fuse or circuit breaker.
2. **Unbalanced 3-Phase Supply Voltage**
   Never operate a motor where a phase imbalance in supply voltage is greater than 2%. Use the following formula to determine the percentage of voltage imbalance.

$$\text{\% Voltage Imbalance} = 100 \times \frac{\text{max voltage deviation from average voltage}}{\text{average voltage}}$$

Example: Supply voltage is 230-3-60

AB = 224 v
BC = 231 v
AC = 226 v

$$\text{Average Voltage} = \frac{(224 + 231 + 226)}{3} = \frac{681}{3} = 227$$

Determine maximum deviation from average voltage.
(AB) 227 – 224 = 3 v . . . . . Maximum deviation is 4 v.
(BC) 231 – 227 = 4 v . . . . . Determine percent of voltage imbalance.

$$\text{\% Voltage Imbalance} = 100 \times \frac{4}{227} = 1.76\%$$

This amount of phase imbalance is satisfactory as it is below the maximum allowable 2%.

IMPORTANT: If the supply voltage phase imbalance is more than 2%, contact your local electric utility company immediately.

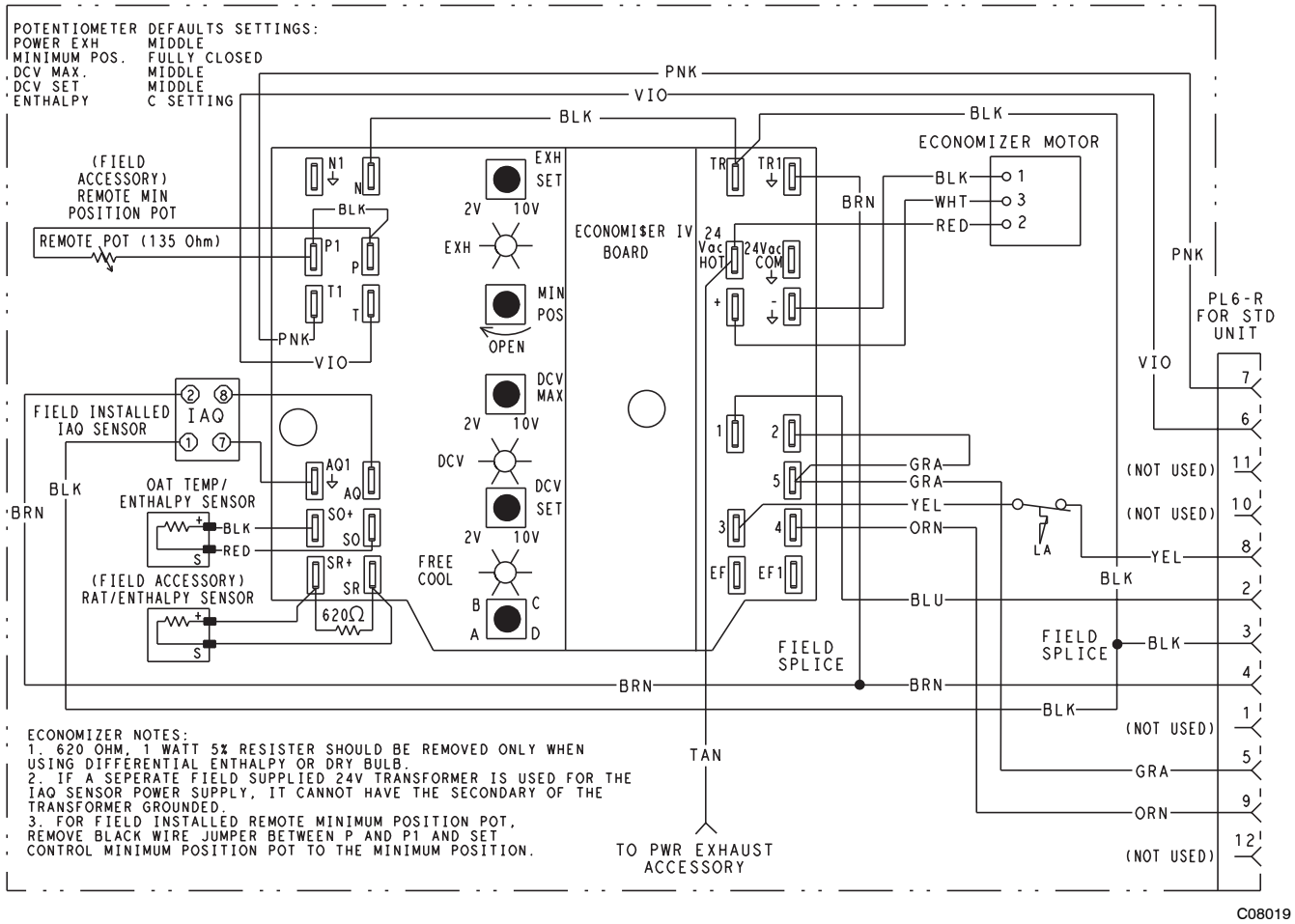

Fig. 20 - EconoMi$er IV Wiring

Step 11 — Adjust Factory-Installed Options

Smoke Detectors —

Smoke detector(s) will be connected at the Controls Connections Board, at terminals marked "Smoke Shutdown". Remove jumper JMP 3 when ready to energize unit.

EconoMi$er IV Occupancy Switch —

Refer to Fig. 20 for general EconoMi$er IV wiring. External occupancy control is managed through a connection on the Controls Connections Board.

If external occupancy control is desired, connect a time clock or remotely controlled switch (closed for Occupied, open for Unoccupied sequence) at terminals marked OCCUPANCY. Remove or cut jumper JMP 2 to complete the installation.

Step 12 — Install Accessories

Available accessories include:

- Curb
- Thru-base connection kit (must be installed before unit is set on curb)
- Electric heaters and single-point connection kits
- Manual outside air damper
- Two-Position motorized outside air damper
- EconoMi$er IV (with control)
- EconoMi$er2 (without control/for external signal)
- Power Exhaust
- Differential dry-bulb sensor (EconoMi$er IV)
- Outdoor enthalpy sensor
- Differential enthalpy sensor
- CO2 sensor
- Smoke detector (Return Air and/or Supply Air)
- DDC interface (PremierLink)
- 4-Inch filter tracks
- Louvered hail guard
- Hood-type hail guard
- UV-C lamp kit
- Phase monitor control
- Hydronic heating coil

Refer to separate installation instructions for information on installing these accessories.

Copyright 2008 Carrier Corp. • 7310 W. Morris St. • Indianapolis, IN 46231 Printed in U.S.A. Edition Date: 01/08 **Catalog No: 50TC−1SI**

Manufacturer reserves the right to change, at any time, specifications and designs without notice and without obligations. Replaces: NEW