C4A6S, H4A6S, T4A6S
SINGLE-STAGE SPLIT-SYSTEM AIR CONDITIONERS WITH R-410A REFRIGERANT

Installation Instructions

NOTE: Read the entire instruction manual before starting the installation.

SAFETY CONSIDERATIONS

IMPORTANT: This appliance shall only be installed by EPA qualified personnel having appropriate certification. This appliance is not intended for use by persons (including children) with reduced physical, sensory or mental capabilities or lack of experience and knowledge, unless they have been given supervision or instruction concerning use of the appliance by a person responsible for their safety.

Improper installation, adjustment, alteration, service, maintenance, or use can cause explosion, fire, electrical shock, or other conditions which may cause death, personal injury, or property damage. Consult a qualified installer, service agency, or your distributor or branch for information or assistance. The qualified installer or agency must use factory-authorized kits or accessories when modifying this product. Refer to the individual instructions packaged with the kits or accessories when installing.

Follow all safety codes. Wear safety glasses, protective clothing, and work gloves. Use quenching cloth for brazing operations. Have fire extinguisher available. Read these instructions thoroughly and follow all warnings or cautions included in literature and attached to the unit. Consult local building codes and current editions of the National Electrical Code (NEC) NFPA 70. In Canada, refer to current editions of the Canadian electrical code CSA 22.1.

Recognize safety information. This is the safety-alert symbol ⚠ When you see this symbol on the unit and in instructions or manuals, be alert to the potential for personal injury. Understand these signal words; DANGER, WARNING, and CAUTION. These words are used with the safety-alert symbol. DANGER identifies the most serious hazards which will result in severe personal injury or death. WARNING signifies hazards which could result in personal injury or death. CAUTION is used to identify unsafe practices which would result in minor personal injury or product and property damage. NOTE is used to highlight suggestions which will result in enhanced installation, reliability, or operation.

⚠ WARNING

ELECTRICAL SHOCK HAZARD

Failure to follow this warning could result in personal injury or death.

Before installing, modifying, or servicing system, main electrical disconnect switch must be in the OFF position. There may be more than 1 disconnect switch. Lock out and tag switch with a suitable warning label.

⚠ WARNING

EXPLOSION HAZARD

Failure to follow this warning could result in personal injury or death.

Never use air or any gas containing oxygen for leak testing or operating refrigerant compressors. Never allow compressor suction pressure to operate in a vacuum with service valves closed. See service manual for pump-down instructions.

GENERAL

NOTE: In some cases noise in the living area has been traced to gas pulsations from improper installation of equipment.

1. This unit is intended to be installed in a location that is 10,000 feet (3000 meters) above sea level or lower.
2. Locate unit away from windows, patios, decks, etc. where unit operation sound may disturb customer.
3. Ensure that vapor and liquid tube diameters are appropriate for unit capacity.
4. Run refrigerant tubes with no bends with centerline bend radius less than 2.5 times the external pipe diameter.
5. Leave some slack between structure and unit to absorb vibration.
6. When passing refrigerant tubes through the wall, seal opening with RTV or other pliable silicon-based caulk. (See Fig. 1.)
7. Avoid direct tubing contact with water pipes, duct work, floor joists, wall studs, floors, and walls.
8. Do not suspend refrigerant tubing from joists and studs with a rigid wire or strap which comes in direct contact with tubing (see Fig. 1).
9. Ensure that tubing insulation is pliable and completely surrounds vapor tube.
10. When necessary, use hanger straps which are 1 in. (25 mm) wide and conform to shape of tubing insulation. (See Fig. 1.)
11. Isolate hanger straps from insulation by using metal sleeves bent to conform to shape of insulation.
12. Provision shall be made for expansion and contraction of long runs of piping.
13. Piping and fittings shall be protected as far as possible against adverse environmental effects. For example, the accumulation of dirt and debris.
14. Piping should be installed to reduce the likelihood of hydraulic shock damaging the system.
15. Certified piping and components must be used in order to protect against corrosion.
16. Flexible pipe elements shall be protected against mechanical damage, excessive stress by torsion, or other forces. They should be checked for mechanical damage annually.
17. Piping material, routing, and installation shall be include protection from physical damage in operation and service, and be in compliance with the national and local codes and standards of the installation site.
18. When setting up refrigerant piping, precautions shall be taken to avoid excessive vibration or pulsation

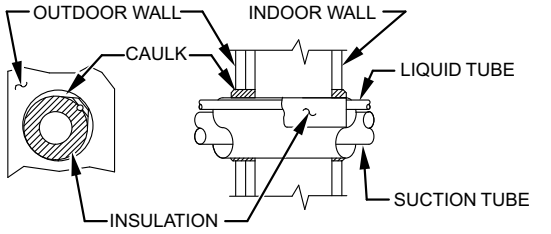

THROUGH THE WALL

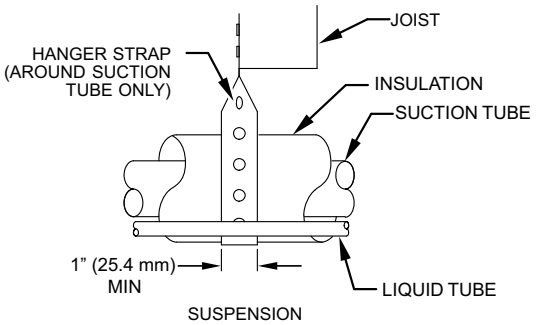

SUSPENSION

A07588

Fig. 1 – Piping Installation

When outdoor unit is connected to factory–approved indoor unit, outdoor unit contains system refrigerant charge for operation with AHRI rated indoor unit when connected by 15 ft. (4.57 m) of field–supplied or factory accessory tubing.

For proper unit operation, check refrigerant charge using charging information located on control box cover and/or in the Check Charge section of this instruction.

IMPORTANT: Maximum liquid-line size is 3/8-in. OD for all residential applications including long line. Refer to Residential Piping and Longline Guideline for further information.

IMPORTANT: Always install the factory-supplied liquid-line filter drier. If replacing the filter drier, refer to Product Replacement Parts List. for appropriate part number. Obtain replacement filter driers from your distributor or branch.

Installation

IMPORTANT: Effective January 1, 2015, all split system and packaged air conditioners must be installed pursuant to applicable regional efficiency standards issued by the Department of Energy.

⚠ CAUTION

CUT HAZARD

Failure to follow this caution may result in personal injury.

Sheet metal parts may have sharp edges or burrs. Use care and wear appropriate protective clothing and gloves when handling parts.

Check Equipment and Job Site

UNPACK UNIT

Move to final location. Remove carton taking care not to damage unit.

Inspect Equipment

File claim with shipping company prior to installation if shipment is damaged or incomplete. Locate unit rating plate on unit corner panel. It contains information needed to properly install unit. Check rating plate to be sure unit matches job specifications.

Install on a Solid, Level Mounting Pad

If conditions or local codes require the unit be attached to pad, tie down bolts should be used and fastened through knockouts provided in unit base pan. Refer to unit mounting pattern in Fig. 2 to determine base pan size and knockout hole location.

For hurricane tie downs, contact local distributor for details and PE (Professional Engineer) certification, if required.

On rooftop applications, mount on level platform or frame. Place unit above a load-bearing wall and isolate unit and tubing set from structure. Arrange supporting members to adequately support unit and minimize transmission of vibration to building. Consult local codes governing rooftop applications.

Roof mounted units exposed to winds may require wind baffles. Consult the Application Guideline and Service Manual - Residential Split System Air Conditioners and Heat Pumps for wind baffle construction.

NOTE: Unit must be level to within ±2_ (±3/8 in./ft ,.±9.5 mm/m) per compressor manufacturer specifications.

Clearance Requirements

When installing, allow sufficient space for airflow clearance, wiring, refrigerant piping, and service. Allow 24 in. (609.6 mm) clearance to service end of unit and 48 in. (1219.2 mm) (above unit. For proper airflow, a 6-in. (152.4 mm) clearance on 1 side of unit and 12-in. (304.8 mm) on all remaining sides must be maintained. Maintain a distance of 24 in. (609.6 mm) between units or 18 in. (457.2 mm) if no overhang within 12 ft. (3.66 m) Position so water, snow, or ice from roof or eaves cannot fall directly on unit.

NOTE: 18" (457.2 mm) clearance option described above is approved for outdoor units with wire grille coil guard only. Units with louver panels require 24" (609.6 mm) between units.

On rooftop applications, locate unit at least 6 in. (152.4 mm) above roof surface.

Operating Ambient

The minimum outdoor operating ambient in cooling mode without accessory is 55°F (13°C).

Make Piping Connections

⚠ WARNING

PERSONAL INJURY AND ENVIRONMENTAL HAZARD

Failure to follow this warning could result in personal injury or death.

Relieve pressure and recover all refrigerant before system repair or final unit disposal. Use all service ports and open all flow-control devices, including solenoid valves.

Federal regulations require that you do not vent refrigerant to the atmosphere. Recover during system repair or final unit disposal.

⚠ CAUTION

UNIT DAMAGE HAZARD

Failure to follow this caution may result in equipment damage or improper operation.

If ANY refrigerant tubing is buried, provide a 6-in (152.4 mm). vertical rise at service valve. Refrigerant tubing lengths up to 36-in (914.4 mm). may be buried without further special consideration. Do not bury lines more than 36-in. (914.4 mm).

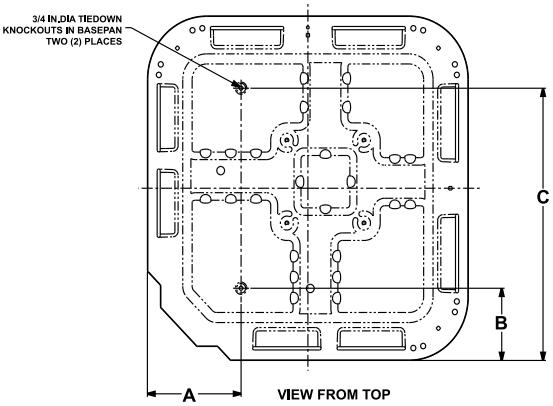

UNIT BASE PAN Dimension in. (mm)	TIEDOWN KNOCKOUT LOCATIONS in. (mm)		
	A	B	C
23-1/2 X 23-1/2 (596.9 X 596.9)	7-13/16 (198.4)	4–7/16 (112.7)	18–1/16 (458.8)
26 X 26 (660.4 X 660.4)	9–1/8 (231.8)	4–7/16 (112.7)	21–1/4 (539.8)
31–1/2 X 31–1/2 (800.1 X 800.1)	9–1/8 (231.8)	6–9/16 (166.7)	24–11/16 (627.1)
35 X 35 (889 X 889)	9–1/8 (231.8)	6–9/16 (166.7)	28–7/16 (722.3)

A05177

Fig. 2 – Tiedown Knockout Locations

Outdoor units may be connected to indoor section using accessory tubing package or field-supplied refrigerant grade tubing of correct size and condition. Rated tubing diameters shown in Table 1 are recommended up to 80 ft. (24.38 m). See Product Data for acceptable alternate vapor diameters and associated capacity losses. For tubing requirements beyond 80 ft. (24.38 m), substantial capacity and performance losses can occur. Following the recommendations in the *Residential Piping and Long Line Guideline* will reduce these losses. Refer to Table 1 for field tubing diameters. Refer to Table 6 for accessory requirements.

There are no buried-line applications greater than 36-in. (914.4 mm) allowed.

If refrigerant tubes or indoor coil are exposed to atmosphere, they must be evacuated to 500 microns to eliminate contamination and moisture in the system.

Outdoor Unit Connected to Factory Approved Indoor Unit

Outdoor unit contains approximate system refrigerant charge for operation with factory approved AHRI rated indoor unit when connected by 15 ft. (4.57 m) of field-supplied or factory-accessory tubing, and factory supplied filter drier. Check refrigerant charge for maximum efficiency.

Refrigerant Tubing Connection Outdoor

Connect vapor and liquid tubes to fittings on vapor and liquid service valves (see Table 1.) Use refrigerant grade tubing

Sweat Connection

⚠ CAUTION

UNIT DAMAGE HAZARD

Failure to follow this caution may result in equipment damage or improper operation.

Service valves must be wrapped in a heat-sinking material such as a wet cloth while brazing.

Use refrigeration grade tubing. Service valves are closed from factory and ready for brazing. Clean line set tube ends with emery cloth or steel brush. Remove any grit or debris. Insert line set tube ends into service valve tube stubs. Apply heat absorbing paste or heat sink product between service valve and joint. Wrap service valves with a heat sinking material such as a wet cloth. Braze joints using a Sil--Fos or Phos--copper alloy. Consult local code requirements.

Refrigerant tubing and indoor coil are now ready for leak testing. This check should include all field and factory joints.

NOTE: Some outdoor units contain a mechanical fitting at the liquid distributor. This connection is not field serviceable and should not be disturbed.

⚠ WARNING

FIRE HAZARD

Failure to following this warning could result in personal injury, death and/or property damage.

Refrigerant and oil mixture could ignite and burn as it escapes and contacts brazing torch. Make sure the refrigerant charge is properly removed from both the high and low sides of the system before brazing any component or lines.

⚠ CAUTION

BURN HAZARD

Failure to follow this caution may result in personal injury

Components will be HOT after brazing. Wear appropriate personal protective equipment and allow to cool before handling parts and equipment.

Table 1 – Refrigerant Connections and Recommended Liquid and Vapor Tube Diameters (In.)

UNIT SIZE	LIQUID*	RATED VAPOR*	
	Connection & Max. Tube Diameter	Connection Diameter	Tube Diameter
18, 24, 30	3/8	3/4	3/4
36, 42, 48, 49	3/8	7/8	7/8
60, 61	3/8	7/8	1-1/8

*. Units are rated with 25 ft. (7.6 m) of lineset. See Product Data sheet for performance data when using different size and length linesets.

Notes:
1. Do not apply capillary tube to these units.
2. For Tubing Set lengths between 80 and 200 ft. (26.7 and 61.0 m) horizontal or 35 ft. (10.7 m) vertical differential 250 ft. (76.2 m) Total Equivalent Length), refer to the Residential Piping and Longline Guideline- Air Conditioners and Heat Pumps using Puron refrigerant.
3. For alternate liquid line options on 18-42 size units, see Product Data or Residential Piping and Application Guideline

Install Liquid-Line Filter Drier Indoor

⚠ CAUTION

UNIT DAMAGE HAZARD

Failure to follow this caution may result in equipment damage or improper operation.

1. Installation of filter drier in liquid line is required.
2. Filter drier must be wrapped in a heat-sinking material such as a wet cloth while brazing.

Refer to Fig. 3 and install filter drier as follows:

1. Braze 5-in. liquid tube to the indoor coil.
2. Wrap filter drier with damp cloth.
3. Braze filter drier to above 5-in. (127 mm) liquid tube. Flow arrow must point towards indoor coil.
4. Connect and braze liquid refrigerant tube to the filter drier.

IMPORTANT: Installation of the filter drier in liquid line is required.

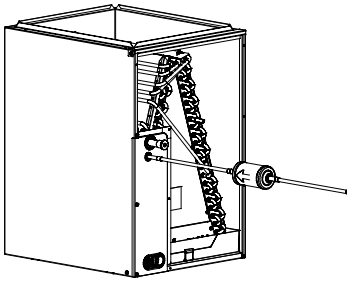

A05178

Fig. 3 – Liquid Line Filter Drier

Evacuate Refrigerant Tubing and Indoor Coil

CAUTION

UNIT DAMAGE HAZARD

Failure to follow this caution may result in equipment damage or improper operation.

Never use the system compressor as a vacuum pump.

Refrigerant tubes and indoor coil should be evacuated using the recommended deep vacuum method of 500 microns. The alternate triple evacuation method may be used (see triple evacuation procedure in service manual). Always break a vacuum with dry nitrogen.

Deep Vacuum Method

The deep vacuum method requires a vacuum pump capable of pulling a vacuum of 500 microns and a vacuum gage capable of accurately measuring this vacuum depth. The deep vacuum method is the most positive way of assuring a system is free of air and liquid water. A tight dry system will hold a vacuum of 1000 microns after approximately 7 minutes. See Fig. 4

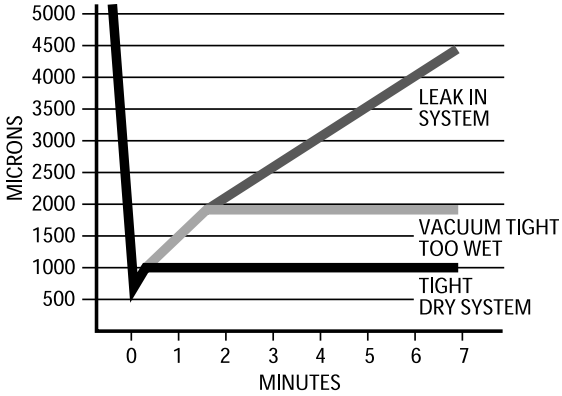

A95424

Fig. 4 – Deep Vacuum Graph

Mandatory Requirements

Pressure Proof Check

1. Preform a pressure check of the unit with a nitrogen charge of about 200psi.
2. the Nitrogen holding charge must **NOT** decrease in pressure for **1 hour**, as indicated by the test gauge. The measuring test gauge resolution not exceeding 5% of the holding charge.

Leak Check

This leak check requires a vacuum pump capable of pulling a vacuum of at least 500 microns and a vacuum gage capable of accurately measuring this vacuum depth.

WARNING

FIRE HAZARD

Failure to following this warning could result in personal injury, death and/or property damage.

DO NOT USE FLAMES OR IGNITION SOURCES TO LEAK CHECK.

1. Vacuum unit to 500 microns.
2. When isolating the unit from the pump, the pressure shall not rise above 1500 microns in 10 minutes.

Final Tubing Check

IMPORTANT: Check to be certain factory tubing on both indoor and outdoor unit has not shifted during shipment. Ensure tubes are not rubbing against each other or any sheet metal or wires. Pay close attention to feeder tubes, making sure wire ties on feeder tubes are secure and tight.

Installing with Indoor Piston

Outdoor Unit Connected to Factory Approved Indoor Unit

Check piston size shipped with indoor unit to see if it matches required indoor piston size. If it does not match, replace indoor piston with correct piston size.

The piston included with the FMA, FMC and FMU fan coils are unique to those products and CANNOT be replaced with the piston shipped with outdoor unit. Refer to the AHRI Directory to check if a certain combination can use a piston or requires an accessory TXV.

When changing indoor piston, use a back−up wrench. Hand tighten hex nut, then tighten with wrench 1/2 turn. Do not exceed 30 ft−lbs. The indoor piston contains a Teflon ring (or seal) which is used to seat against the inside of distributor body, and must be installed properly to ensure proper seating. See Fig. 5

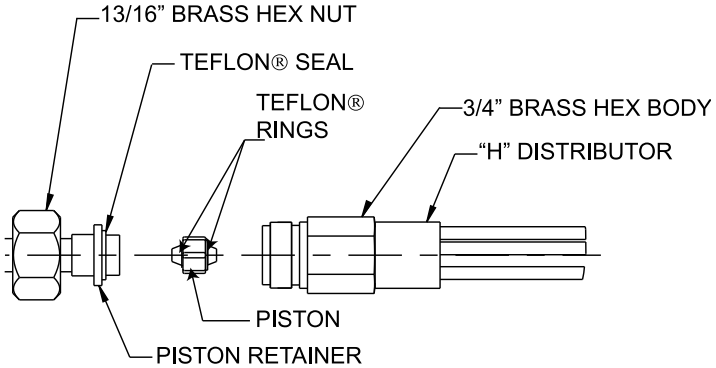

A10342

Fig. 5 – Indoor (Cooling) Piston

Air Conditioner Applied as Replacement Component

If the air conditioner is installed as a replacement component in an existing piston indoor system, the piston size in the indoor unit should be changed to the size required for the air conditioner which can be found in the Product Data

Units with Cooling Mode TXV

Units installed with cooling mode TXV require charging by the subcooling method.

1. Operate unit a minimum of 15 minutes before checking charge.
2. Measure liquid service valve pressure by attaching an accurate gage to service port.
3. Measure liquid line temperature by attaching an accurate thermistor type or electronic thermometer to liquid line near outdoor coil.
4. Refer to unit rating plate for required subcooling temperature.
5. Refer to Table 2 - Rating Plate (required) Subcooling Temperature. Find the point where required subcooling temperature intersects measured liquid service valve pressure.
6. To obtain required subcooling temperature at a specific liquid line pressure, add refrigerant if liquid line temperature is higher than indicated or reclaim refrigerant if temperature is lower. Allow a tolerance of ±3°F (±1.7°C).

Units with Indoor Piston

Units installed with indoor pistons require charging by the superheat method.

The following procedure is valid when indoor airflow is within ±21 percent of its rated CFM.

1. Operate unit a minimum of 15 minutes before checking charge.
2. Measure suction pressure by attaching an accurate gage to suction valve service port.
3. Measure suction temperature by attaching an accurate thermistor type or electronic thermometer to suction line at service valve.
4. Measure outdoor air dry-bulb temperature with thermometer.
5. Measure indoor air (entering indoor coil) wet-bulb temperature with a sling psychrometer.
6. Refer to Table 3 - Superheat Charging - AC Only. Find outdoor temperature and evaporator entering air wet-bulb temperature. At this intersection, note superheat. Where a dash (--) appears on the table, do not attempt to charge system under these conditions or refrigerant slugging may occur. Charge must be weighted in, adding or removing 0.6 oz/ft of 3/8 liquid line above or below 15 feet (4.6m) respectively.
7. Refer to Table 4 - Required Suction-Line Temperature. Find superheat temperature (from #6 above) and suction pressure. At this intersection, note suction line temperature.
8. If unit has a higher suction line temperature than charted temperature, add refrigerant until charted temperature is reached.
9. If unit has a lower suction line temperature than charted temperature, reclaim refrigerant until charted temperature is reached.
10. When adding refrigerant, charge in liquid form into suction service port using a flow-restricting device.
11. If outdoor air temperature or pressure at suction valve changes, charge to new suction line temperature indicated on chart.
12. Optimum performance will be achieved when the operating charge produces 10°F suction superheat at suction service valve with 95°F (35°C) outdoor ambient and 80°F (27°C) dry bulb (67°F / 19°C) wet bulb) indoor temperature (DOE “A” test conditions) at rated airflow.

Manufacturer reserves the right to change, at any time, specifications and designs without notice and without obligations.

Table 2 – Rating Plate (required) Subcooling Temperatures

Measure Liquid Pressure (psig)	R-410A Required Liquid Line Temperature °F (°C)											
	°F	(°C)	°F	(°C)	°F	(°C)	°F	(°C)	°F	(°C)	°F	(°C)
	6	3	8	4	10	6	12	7	14	8	16	9
251	78	26	76	24	74	23	72	22	70	21	68	20
259	80	27	78	26	76	24	74	23	72	22	70	21
266	82	28	80	27	78	26	76	24	74	23	72	22
274	84	29	82	28	80	27	78	26	76	24	74	23
283	86	30	84	29	82	28	80	27	78	26	76	24
291	88	31	86	30	84	29	82	28	80	27	78	26
299	90	32	88	31	86	30	84	29	82	28	80	27
308	92	33	90	32	88	31	86	30	84	29	82	28
317	94	34	92	33	90	32	88	31	86	30	84	29
326	96	36	94	34	92	33	90	32	88	31	86	30
335	98	37	96	36	94	34	92	33	90	32	88	31
345	100	38	98	37	96	36	94	34	92	33	90	32
364	104	40	102	39	100	38	98	37	96	36	94	34
374	106	41	104	40	102	39	100	38	98	37	96	36
384	108	42	106	41	104	40	102	39	100	38	98	37
395	110	43	108	42	106	41	104	40	102	39	100	38
406	112	44	110	43	108	42	106	41	104	40	102	39
416	114	46	112	44	110	43	108	42	106	41	104	40
427	116	47	114	46	112	44	110	43	108	42	106	41
439	118	48	116	47	114	46	112	44	110	43	108	42
450	120	49	118	48	116	47	114	46	112	44	110	43
462	122	50	120	49	118	48	116	47	114	46	112	44
474	124	51	122	50	120	49	118	48	116	47	114	46

Table 3 – Superheat Charging - AC Only

OUTDOOR TEMP (°F)	EVAPORATOR ENTERING AIR TEMPERATURE (°F WB)													
	50	52	54	56	58	60	62	64	67	68	70	72	74	76
55	9	12	14	17	20	23	26	29	32	35	37	40	42	45
60	7	10	12	15	18	21	24	27	30	33	35	38	40	43
65	—	6	10	13	16	19	21	24	27	30	33	36	38	41
70	—	—	7	10	13	16	19	21	24	27	30	33	36	39
75	—	—	—	6	9	12	15	18	21	24	28	31	34	37
80	—	—	—	—	5	8	12	15	18	21	25	28	31	35
85	—	—	—	—	—	—	8	11	15	19	22	26	30	33
90	—	—	—	—	—	—	5	9	13	16	20	24	27	31
95	—	—	—	—	—	—	—	6	10	14	18	22	25	29
100	—	—	—	—	—	—	—	—	8	12	15	20	23	27
105	—	—	—	—	—	—	—	—	5	9	13	17	22	26
110	—	—	—	—	—	—	—	—	—	6	11	15	20	25
115	—	—	—	—	—	—	—	—	—	—	8	14	18	23

Notes:
- Optimum performance point, 95°F (35°C) outdoor ambient and (80°F / 27°C dry bulb), (67°F / 19°C wet bulb) indoor conditions. (DOE A Test Conditions)
- Where a dash (—) appears do not attempt to charge system under these conditions or refrigerant slugging may occur. Charge must be weighed in.
- Superheat °F is at low-side service port, Allow a tolerance of ±3°F (±1.7°C)
- Indoor dry bulb between 70°F and 80°F (21°C and 27°C)

Table 4 – Required Suction-Line Temperature

SUPERHEAT TEMP (°F)	SUCTION PRESSURE AT SERVICE PORT (PSIG)								
	107.8	112.2	116.8	121.2	126	130.8	138.8	140.8	145.8
0	35	37	39	41	43	45	47	49	51
2	37	39	41	43	45	47	49	51	53
4	39	41	43	45	47	49	51	53	55
6	41	43	45	47	49	51	53	55	57
8	43	45	47	49	51	53	55	57	59
10	45	47	49	51	53	55	57	59	61
12	47	49	51	53	55	57	59	61	63
14	49	51	53	55	57	59	61	63	65
16	51	53	55	57	59	61	63	65	67
18	53	55	57	59	61	63	65	67	69
20	55	57	59	61	63	65	67	69	71
22	57	59	61	63	65	67	69	71	73
24	59	61	63	65	67	69	71	73	75
26	61	63	65	67	69	71	73	75	77
28	63	65	67	69	71	73	75	77	79
30	65	67	69	71	73	75	77	79	81
32	67	69	71	73	75	77	79	81	83
34	69	71	73	75	77	79	81	83	85
36	71	73	75	77	79	81	83	85	87
38	73	75	77	79	81	83	85	87	89
40	75	77	79	81	83	85	87	89	91

⚠ WARNING

ELECTRICAL SHOCK HAZARD

Failure to follow this warning could result in personal injury or death.

Do not supply power to unit with compressor terminal box cover removed.

Make Electrical Connections

Be sure field wiring complies with local and national fire, safety, and electrical codes, and voltage to system is within limits shown on unit rating plate. Contact local power company for correction of improper voltage. See unit rating plate for recommended circuit protection device.

NOTE: Operation of unit on improper line voltage constitutes abuse and could affect unit reliability. See unit rating plate. Do not install unit in system where voltage may fluctuate above or below permissible limits.

NOTE: Use copper wire only between disconnect switch and unit.

NOTE: Install branch circuit disconnect of adequate size per NEC to handle unit starting current. Locate disconnect within sight and readily accessible from unit, per Section 440-14 of NEC. Refer to Product Data for breaker sizing.

Route Ground and Power Wires

Remove access panel to gain access to unit wiring. Extend wires from disconnect through power wiring hole provided and into unit control box.

⚠ WARNING

ELECTRICAL SHOCK HAZARD

Failure to follow this warning could result in personal injury or death.

The unit cabinet must have an uninterrupted or unbroken ground to minimize personal injury if an electrical fault should occur. The ground may consist of electrical wire or metal conduit when installed in accordance with existing electrical codes.

Connect Ground and Power Wires

This appliance incorporates an earth connection for safety purposes only.

Connect ground wire to ground connection in control box for safety. Connect power wiring to contactor as shown in Fig. 6.

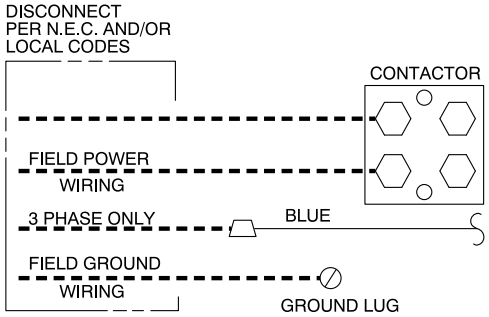

A94025

Fig. 6 – Line Connections

Connect Control Wiring

Route 24-v control wires through control wiring grommet and connect leads to control wiring. Refer to thermostat Installation Instructions for wiring specific unit combinations.

Use No. 18 AWG color-coded, insulated (35°C minimum) wire. If thermostat is located more than 100 ft. (30.48 m) from unit, as measured along the control voltage wires, use No. 16 AWG color-coded wire to avoid excessive voltage drop.

All wiring must be NEC Class 2 and must be separated from incoming power leads.

Use furnace transformer, fan coil transformer, or accessory transformer for control power, 24v/40va minimum.

NOTE: Use of available 24v accessories may exceed the minimum 40va power requirement. Determine total transformer loading and increase the transformer capacity or split the load with an accessory transformer as required.

Final Wiring Check

IMPORTANT: Check factory wiring and field wire connections to ensure terminations are secured properly. Check wire routing to ensure wires are not in contact with tubing, sheet metal, etc.

Compressor Crankcase Heater

When equipped with a crankcase heater, furnish power to heater a minimum of 24 hr before starting unit. To furnish power to heater only, set thermostat to OFF and close electrical disconnect to outdoor unit.

A crankcase heater is required if refrigerant tubing is longer than 80 ft. (24.38 m) or when outdoor unit is 35 ft. (6.10m) below indoor unit. Refer to the Residential Piping and Longline Guideline and Service Manual.

Install Electrical Accessories

Refer to the individual instructions packaged with kits or accessories when installing.

Check OAT Thermistor and OCT Thermistor Attachments

Outdoor Air Temperature (OAT) Thermistor is factory installed by inserting the nibs on either sides of the thermistor body through a keyhole in the bottom shelf of the control box and locking it in place by turning it 90 degrees, such that the spherical end of a nib faces the front of the control box.

Check to make sure the OAT is locked in place (see Fig. 7).

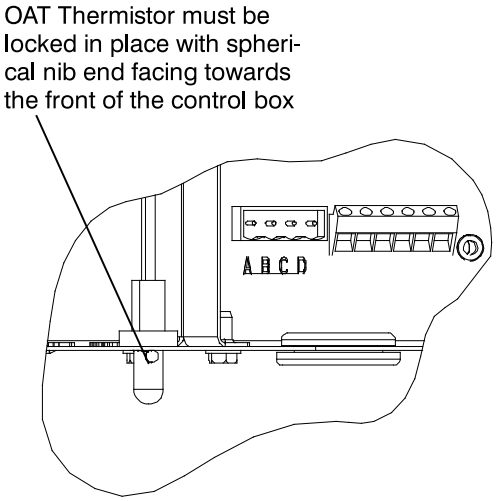

A11142

Fig. 7 – Outdoor Air Thermostat (OAT) Attachment

The Outdoor Coil Temperature (OCT) Thermistor is factory installed on the liquid tube between the coil assembly and the liquid service valve (see Fig. 8).

Check to make sure the thermistor is securely attached on the liquid tube with the clip as shown in Fig. 8.

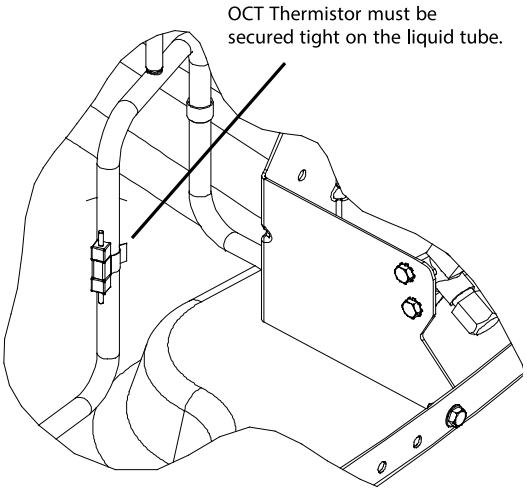

A11143

Fig. 8 – Outdoor Coil Thermostat (OCT) Attachment

Start-Up

⚠ CAUTION

UNIT OPERATION AND SAFETY HAZARD

Failure to follow this caution may result in personal injury, equipment damage or improper operation.

- Do not overcharge system with refrigerant.
- Do not operate unit in a vacuum or at negative pressure.
- Compressor dome temperatures may be hot.

⚠ CAUTION

PERSONAL INJURY HAZARD

Failure to follow this caution may result in personal injury.

Wear safety glasses, protective clothing, and gloves when handling refrigerant and observe the following:

- Front seating service valves are equipped with Schrader valves.

Follow these steps to properly start up system:

1. After system is evacuated, fully open liquid and vapor service valves.
2. Unit is shipped with valve stem(s) front seated (closed) and caps installed. Replace stem caps after system is opened to refrigerant flow. Replace caps finger-tight and tighten with wrench an additional 1/12 turn.
3. Close electrical disconnects to energize system.
4. Set room thermostat at desired temperature. Be sure set point is below indoor ambient temperature.
5. Set room thermostat to COOL and fan control to ON or AUTO mode, as desired. Operate unit for 15 minutes. Check system refrigerant charge.

Check Charge

Factory charge amount and desired subcooling are shown on unit rating plate. Charging method is shown on information plate inside unit. To properly check or adjust charge, conditions must be favorable for subcooling charging. Favorable conditions exist when the outdoor temperature is between 70°F and 100°F (21.11°C and 37.78°C), and the indoor temperature is between 70°F and 80°F (21.11°C and 26.67°C). Follow the procedure below:

Unit is factory charged for 15ft (4.57 m) of lineset. Adjust charge by adding or removing 0.6 oz/ft of 3/8 liquid line above or below 15ft (4.57 m) respectively.

For standard refrigerant line lengths (80 ft/24.38 m or less), allow system to operate in cooling mode at least 15 minutes. When operating with the Ion™ Wall Control in communicating mode, make sure that indoor airflow is set to “efficiency” during charging. If conditions are favorable, check system charge by subcooling method. If any adjustment is necessary, adjust charge slowly and allow system to operate for 15 minutes to stabilize before declaring a properly charged system.

If the indoor temperature is above 80°F (26.67°C), and the outdoor temperature is in the favorable range, adjust system charge by weight based on line length and allow the indoor temperature to drop to 80°F (26.67°C) before attempting to check system charge by subcooling method as described above.

If the indoor temperature is below 70°F (21.11°C), or the outdoor temperature is not in the favorable range, adjust charge for line set length above or below 15ft (4.57 m) only. Charge level should then be appropriate for the system to achieve rated capacity. The charge level

could then be checked at another time when the both indoor and outdoor temperatures are in a more favorable range.

NOTE: If line length is beyond 80 ft (24.38 m) or greater than 20 ft (6.10 m) vertical separation, See Long Line Applications Guideline for special charging requirements.

Major Components

Control Board

The AC control board controls the following functions:

- Compressor contactor operation
- Outdoor fan motor operation
- Compressor external protection
- Pressure switch monitoring
- Time Delays

Field Connections

When using communicating control, 4 field wires are required to be connected to the factory wires already wired to the DX+, DX-, C, D terminal (see Fig. 12). Unit as provided by manufacturer is set up for communicating control.

When used with a standard non-communicating thermostat, it is recommended to use 3 thermostat control wires to be connected to R, Y and C. When using 3 wires, all diagnostic and time delay features are enabled (see Fig. 13). Disconnect factory provided wires from DX+, DX-, C & D terminals. Using factory provided wires, connect to R, C, and Y on the control board for 3 wire thermostat control. Connect field 24V wires to factory provided wires now connected to R, C, and Y and cap both sides or remove unused factory provided wires.

When only 2 thermostat control wires are available, units will function, but some control features are lost (see Fig. 14). With only 2 wires connected, the circuit board will be powered down whenever there is no call for cooling, and the following will result:

- Compressor time delay is reduced from 5 minutes to 10 seconds
- When the thermostat is not calling for cooling, the amber status light will be off, and no diagnostics codes will be available
- All system counters will be reset on each new call for cooling

Disconnect factory provided wires from DX+, DX-, C and D terminals. Using factory provided wires, connect to C and Y on the control board for 2 wire thermostat control. A field installed jumper wire is also required between R and Y (see Fig. 14). Connect field 24V wires to factory provided wires now connected to C and Y and cap both sides or remove unused factory provided wires.

NOTE: The 49 and 61 size units utilize a board that also is capable of being used on a HP. Do not connect any wires to O or W2 and it will operate as a standard AC board.

Compressor Internal Relief

The compressor is protected by an Internal Pressure Relief (IPR) which relieves discharge gas into the compressor shell when differential between suction and discharge pressure exceeds 550-625 psi. The compressor is also protected by an internal overload attached to motor windings.

General Sequence of Operation Standard Thermostat

Turn on power to indoor and outdoor units. Transformer is energized.

On a call for cooling, thermostat makes circuits R-Y and R-G. Circuit R-Y energizes contactor, starting outdoor fan motor and compressor circuit. R-G energizes indoor unit blower relay, starting indoor blower motor on high speed.

NOTE: To achieve the rated system performance, the indoor unit or the thermostat must be equipped with a time delay relay circuit.

When thermostat is satisfied, its contacts open, de-energizing contactor and blower relay. Compressor and motors stop. If indoor unit is equipped with a time-delay relay circuit, the indoor blower will run an additional 90 sec to increase system efficiency.

Control Functions and Sequence of Operation

The outdoor unit control system has special functions. The following is an overview of the control functions.

Sequence of Operation

Cooling Operation

This product utilizes either a standard indoor thermostat or Ion™ Communicating Wall Control. With a call for cooling, the outdoor fan and compressor are energized. When the cooling demand is satisfied, the compressor and fan will shut off.

NOTE: The outdoor fan motor will continue to operate for one minute after compressor shuts off, when the outdoor ambient is greater than or equal to 100°F (37.78°C).

Communication and Status Function Lights

Green Communications (COMM) Light (Communicating Control only):

A green LED (COMM light) on the outdoor board indicates successful communication with the other system products. The green LED will remain OFF until communications is established. Once a valid command is received, the green LED will turn ON continuously. If no communication is received within 2 minutes, the LED will be turned OFF until the next valid communication.

Amber Status Light

An amber colored STATUS light is used to display the operation mode and fault codes as specified in the troubleshooting section. See Table 5 for codes and definitions.

NOTE: Only one fault code will be displayed on the outdoor unit control board (the most recent, with the highest priority).

Crankcase Heater Operation

The crankcase heater (when applicable) is energized during the off cycle below 65°F (37.78°C).

Outdoor Fan motor Operation

The outdoor unit control energizes outdoor fan any time the compressor is operating. The outdoor fan remains energized for 15 minutes if a pressure switch or compressor thermal protector should open. Outdoor fan motor will continue to operate for one minute after the compressor shuts off when the outdoor ambient is greater than or equal to 100°F (37.78°C).

Time Delays

The unit time delays include:

- Five minute time delay to start cooling operation when there is a call from the thermostat or communicating wall control.
- When operating the unit with 2 wires, this delay is shortened to 10 seconds.
- Five minute compressor recycle delay on return from a brown out condition.
- Two minute time delay to return to standby operation from last valid communications (with communicating only).
- One minute time delay of outdoor fan at termination of cooling mode when outdoor ambient is greater than or equal to 100°F (37.78°C).

Utility Interface

With Non-Communicating Thermostats

Utility curtailment will work when the unit is operating with a non-communicating thermostat and the utility interface. It will also work with the Ion™ Communicating control without the need for an interface.

When the utility curtailment interface is applied with a non-communicating thermostat, the utility relay should be wired in series with the Y input.

Low Ambient Cooling

When this unit is required to operate below 55°F (12.78°C) to a minimum of 0°F (-17.78°C) outdoor temperature, provisions must be made for low ambient operation.

Low ambient applications require the installation of accessory kits:

- Low Ambient Pressure Switch Kit
- Evaporator Freeze Thermostat
- Hard Start kit
- Crankcase Heater

Support feet are recommended for low ambient cooling. See Product Specification sheet for kit part numbers on appropriate unit size and series unit.

For low ambient cooling with the Ion™ Communicating Wall Control the cooling lockout must be set to "Off" in the Wall Control setup.

Liquid Line Solenoid

When operating in communicating mode the standard thermostat terminals will not function. A terminal on the non-communicating thermostat bus labeled "LS" on the AC control board is provided for wiring liquid line solenoids when in communicating mode. For operation in communicating mode wire solenoid valve kit NASA401LS across LS and C terminals. For operation in non-communicating mode wire solenoid valve kit NASA401LS across C and Y terminals.

Troubleshooting

Systems Communication Failure

If communication between outdoor unit, control board, and indoor wall control has failed, the control will flash the appropriate fault code. (See Table 5) Check the wiring to the wall control, indoor and outdoor units.

Pressure Switch Protection

The outdoor unit is equipped with high- and low-pressure switches. If the control senses the opening of a high or low-pressure switch, it will de-energize the compressor contactor, keep the outdoor fan operating for 15 minutes and display the appropriate fault code. (See Table 5)

After a 15 minute delay, if there is still a call for cooling, and the LPS or HPS is reset, the compressor contactor is energized. If the LPS or HPS has not closed after a 15 minute delay, the outdoor fan is turned off. If the open switch closes anytime after the 15-minute delay, then the unit will resume operation with a call for cooling.

If the LPS or HPS trips for five consecutive cycles, then unit operation is locked out for 4 hours and the appropriate fault code (see Table 5) is displayed.

In the event of a high-pressure switch trip or high-pressure lockout, check the refrigerant charge, outdoor fan operation and outdoor coil for airflow restrictions.

In the event of a low-pressure switch trip or low-pressure lockout, check the refrigerant charge and indoor airflow.

Control Fault

If the outdoor unit control board has failed, the control will flash the appropriate fault code (see Table 5). The control board should be replaced.

24V Brown-out Protection

If the control voltage is less than 15.5volts for at least 4 seconds, the compressor contactor and fan relay are de-energized. Compressor and fan operation are not allowed until control voltage is a minimum of 17.5volts. The control will flash the appropriate fault code (see Table 5). Verify the control voltage is in the allowable range of 18-30 volts.

Compressor Voltage Sensing

The input terminals labeled VR and VS on the control board (see Fig. 11 and Fig. 10) are used to detect compressor voltage status, and alert the user of potential problems. The control continuously monitors the high voltage on the run capacitor of the compressor motor. Voltage should be present any time the compressor contactor is energized, and voltage should not be present when the contactor is de-energized.

Compressor Thermal Cutout or Loss of 230V Power

If the control senses the compressor voltage after start-up, and is then absent for 10 consecutive seconds while cooling demand exists, it will de-energize the compressor contactor, keep the outdoor fan operating for 15 minutes (if 230v power present) and display the appropriate fault code (see Table 5). Possible causes are compressor internal overload trip or loss of high voltage (230V) to compressor without loss of control voltage.

After a 15 minute delay, if there is still a call for cooling, the compressor contactor is energized. If the thermal protector has not re-set, the outdoor fan is turned off. If the call for cooling continues, the control will energize the compressor contactor every 15 minutes. If the thermal protector closes, (at the next 15 minute interval check), the unit will resume operation.

If the thermal cutout trips for three consecutive cycles, then unit operation is locked out for 4 hours and the appropriate fault code (see Table 5) is displayed.

Contactor Shorted Detection

If there is compressor voltage sensed when there is no demand for compressor operation, the contactor may be stuck closed. The control will flash the appropriate fault code. Check the contactor and control box wiring.

No 230V at Compressor

If the compressor voltage is not sensed when the compressor should be starting, the contactor may be stuck open or the unit disconnect or circuit breaker may be open. The control will flash the appropriate fault code. Check the contactor, unit disconnect or circuit breaker and control box wiring.

Temperature Thermistors

Thermistors are electronic devices which sense temperature. As the temperature increases, the resistance decreases. Thermistors are used to sense outdoor air (OAT) and coil temperature (OCT).

If the outdoor air or coil thermistor should fail, the control will flash the appropriate fault code (see Table 5).

IMPORTANT: The outdoor air thermistor and coil thermistor are factory mounted in the correct locations. Do not re-locate thermistor sensors.

Thermistor Sensor Comparison

The control continuously monitors and compares the outdoor air temperature sensor and outdoor coil temperature sensor to ensure proper operating conditions. The comparison is, if the outdoor air sensor indicates ≥10°F (≥ -12.22°C) warmer than the coil sensor (or) the outdoor air sensor indicates ≥20°F (≥ -6.67°C) cooler than the coil sensor, the sensors are out of range.

If the sensors are out of range, the control will flash the appropriate fault code (see Table 5).

Failed Thermistor Default Operation

Factory defaults have been provided in the event of failure of outdoor air thermistor and/or coil thermistor.

Thermistor Curve: The resistance vs. temperature chart shown in Fig. 9 enables the technician to check the outdoor air and outdoor coil thermistors for proper resistance. Unplug the thermistor assembly from the circuit board and measure resistance across each thermistor. For example, if the outdoor temperature is 60°F (15.56°C), the resistance reading across the outdoor air thermistor should be around 16,000 ohms.

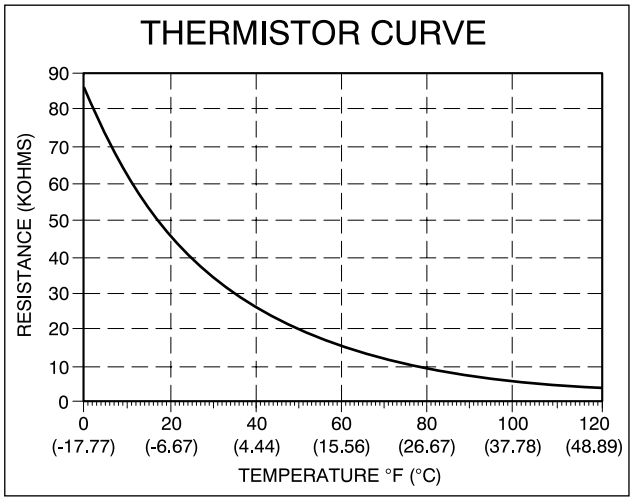

A08054

Fig. 9 – Resistance vs Temperature Chart

Status Codes

Table 5 shows the status codes flashed by the amber status light. Most system problems can be diagnosed by reading the status code as flashed by the amber status light on the control board.

The codes are flashed by a series of short and long flashes of the status light. The short flashes indicate the first digit in the status code, followed by long flashes indicating the second digit of the error code. The short flash is 0.25 second ON and the long flash is 1.0 second ON. Time between flashes is 0.25 second. Time between short flash and first long flash is 1.0 second. Time between code repeating is 2.5 seconds with LED OFF.

Count the number of short and long flashes to determine the appropriate flash code. Table 5 gives possible causes and actions related to each error.

Example: 3 short flashes followed by 2 long flashes indicates a 32 code. Table 5 shows this to be low pressure switch open.

Table 5 – Status Codes

OPERATION	FAULT	AMBER LED FLASH CODE	Possible Cause and Action
Standby – no call for unit operation	None	On solid, no flash	Normal operation - with communicating Control
Standby – no call for unit operation	None	Off	Normal operation - No call for cooling with 2-wire connection or indoor unit not powered.
Cooling Operation	None	1, pause	Normal operation
	System Communications Failure	16	Communication with wall control lost. Check wiring to wall control, indoor and outdoor units
	High Pressure Switch Open	31	High pressure switch trip. Check refrigerant charge, outdoor fan operation and coils for airflow restrictions.
	Low Pressure Switch Open	32	Low pressure switch trip. Check refrigerant charge and indoor air flow
	Control Fault	45	Outdoor unit control board has failed. Control board needs to be replaced.
	Brown Out (24 v)	46	The control voltage is less than 15.5v for at least 4 seconds. Compressor and fan operation not allowed until control voltage is a minimum of 17.5v. Verify control voltage.
	Outdoor Air Temp Sensor Fault	53	Outdoor air sensor not reading or out of range. Ohm out sensor and check wiring
	Outdoor Coil Sensor Fault	55	Coil sensor not reading or out of range. Ohm out sensor and check wiring
	Thermistors out of range	56	Improper relationship between coil sensor and outdoor air sensor. Ohm out sensors and check wiring.
	Thermal Cutout	72	Compressor voltage sensed after start-up, then absent for 10 consecutive seconds while cooling demand exists. Possible causes are internal compressor overload trip or loss of high voltage to compressor without loss of control voltage. The control will continue fan operation and wait 15 minutes to attempt a restart. Fault will clear when restart is successful, or low voltage power is cycled.
	Contactor Shorted	73	Compressor voltage sensed when no demand for compressor operation exists. Contactor may be stuck closed or there is a wiring error.
	No 230V at Compressor	74	Compressor voltage not sensed when compressor should be starting. Disconnect may be open or contactor may be stuck open or there is a wiring error.
	Thermal Lockout	82	Thermal cutout occurs in three consecutive cycles. Unit operation locked out for 4 hours or until 24v power recycled.
	Low Pressure Lockout	83	Low pressure switch trip has occurred during 3 consecutive cycles. Unit operation locked out for 4 hours or until 24v power recycled.
	High Pressure Lockout	84	High pressure switch trip has occurred during 3 consecutive cycles. Unit operation locked out for 4 hours or until 24v power recycled.

Manufacturer reserves the right to change, at any time, specifications and designs without notice and without obligations.

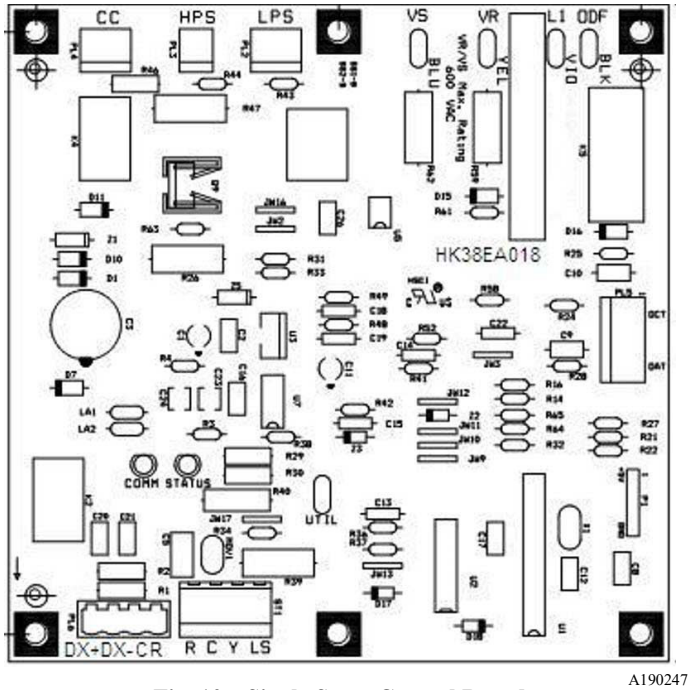

Fig. 10 – Single Stage Control Board

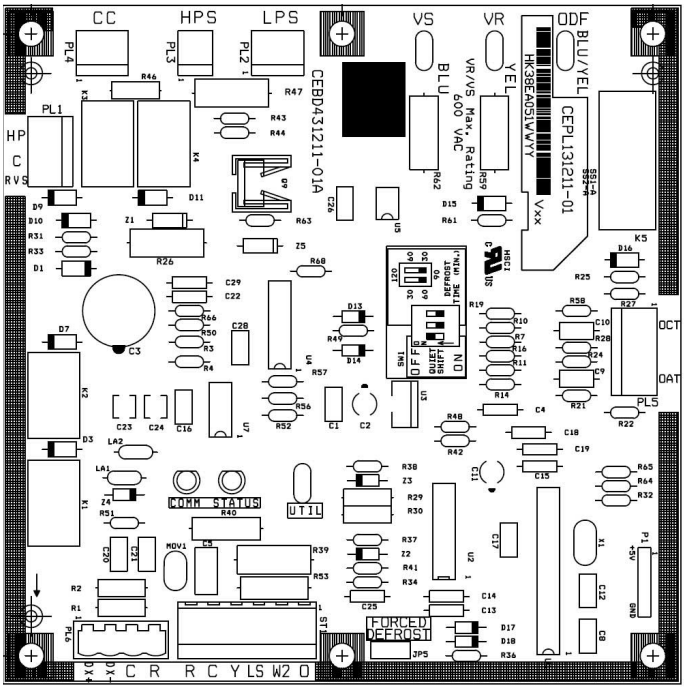

Fig. 11 – Single stage Control Board for 49 and 61 Sizes Only

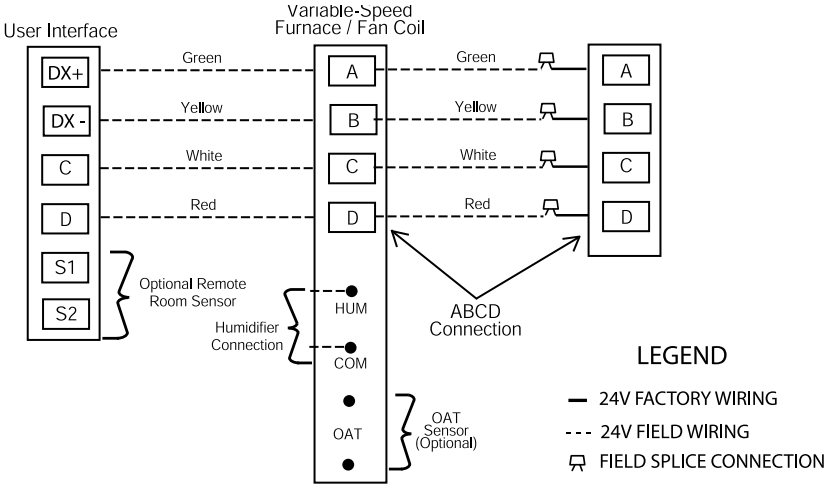

Fig. 12 – Ion™ Communicating Wall Control Four-Wire Connection Wiring Diagrams (see Thermostat Instructions for Specific Unit Combinations)

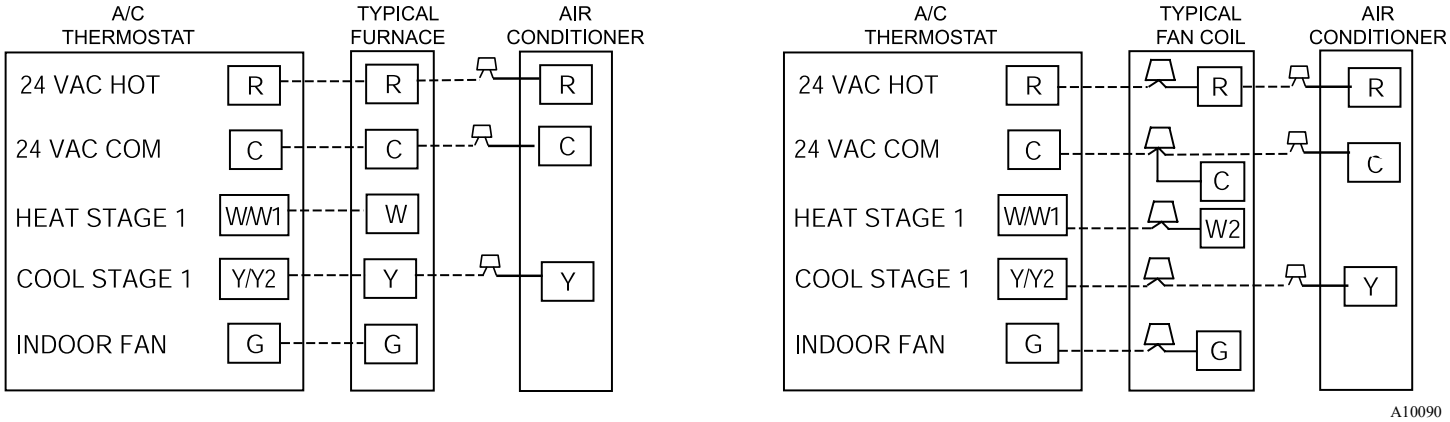

Fig. 13 – Non-Communicating Standard Thermostat 3-Wire 24V Circuit Connections (see Thermostat Instructions for Specific Unit Combinations)

⚠ CAUTION

ELECTRICAL OPERATION HAZARD

Failure to follow this caution may result in equipment damage or improper operation.

A minimum of three wire thermostat wiring is required for the system to operate.

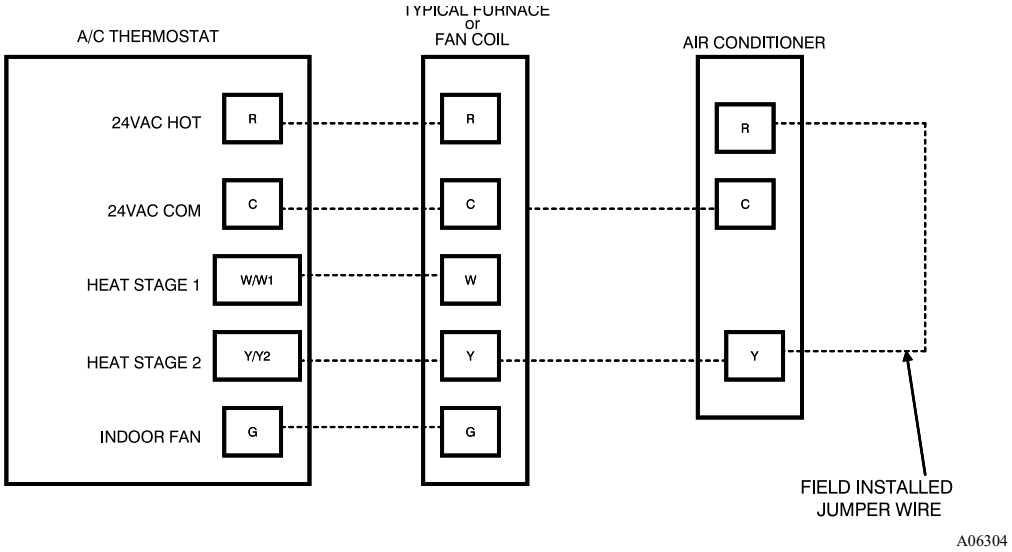

Fig. 14 – Non-Communicating Standard Thermostat 2-Wire 24V Circuit Connections

NOTE: Wiring must conform to NEC or local codes.

* For 15 ft. (4.57 m) line set.

⚠ WARNING

PERSONAL INJURY AND/OR PROPERTY DAMAGE HAZARD

Failure to follow this warning could result in personal injury and/or property damage.

For continued performance, reliability, and safety, the only approved accessories and replacement parts are those specified by the equipment manufacturer. The use of non-manufacturer approved parts and accessories could invalidate the equipment limited warranty and result in fire risk, equipment malfunction, and failure.

Please review manufacturer's instructions and replacement part catalogs available from your equipment supplier.

Table 6 – Accessory Usage

ACCESSORY	REQUIRED FOR LOW-AMBIENT COOLING APPLICATIONS (Below 55°F/13°C)	REQUIRED FOR LONG LINE APPLICATIONS*	REQUIRED FOR SEA COAST APPLICATIONS (Within 2 miles/3.22 km)
Ball Bearing Fan Motor	Yes†	No	No
Compressor Start Assist Capacitor and Relay	Yes	Yes	No
Crankcase Heater	Yes	Yes	No
Evaporator Freeze Thermostat	Yes	No	No
Hard Shut-Off TXV	Yes	Yes	No
Liquid Line Solenoid Valve	No	No	No
Low-ambient Pressure Switch	Yes	No	No
Support Feet	Recommended	No	Recommended
Winter Start Control	Yes‡	No	No

*.For tubing line sets between 80 and 200 ft. (26.7 and 60.96 m) and/or 35 ft. (10.7 m) vertical differential, refer to Residential Piping and Longline Guideline.
†.Additional requirement for Low-Ambient Controller (full modulation feature) .
‡.Required if Low Pressure Switch is factory or field installed.

Final Checks

IMPORTANT: Before leaving job, be sure to do the following:

1. Ensure that all wiring is routed away from tubing and sheet metal edges to prevent rub-through or wire pinching.
2. Ensure that all wiring and tubing is secure in unit before adding panels and covers. Securely fasten all panels and covers.
3. Tighten service valve stem caps to 1/12-turn past finger tight.
4. Leave Owner's Manual with owner. Explain system operation and periodic maintenance requirements outlined in manual.
5. Fill out Dealer Installation Checklist and place in customer file.

Repairing Refrigerant Circuit

When breaking into the refrigerant circuit to make repairs, or for any other purpose, the following procedures shall be used.

1. Safely remove the refrigerant using a recovery pump certified for flammable refrigerants.
2. Purge the refrigerant circuit with nitrogen gas.
3. Evacuate the refrigerant circuit to 1500 microns.
4. Break vacuum with a nitrogen purge of the refrigerant circuit ensuring that the outlet of the vacuum pump is not near a potential ignition source.
5. Open the circuit by cutting or brazing.

CARE AND MAINTENANCE

For continuing high performance and to minimize possible equipment failure, periodic maintenance must be performed on this equipment.

Frequency of maintenance may vary depending upon geographic areas, such as coastal applications. See Owner's Manual for information.

© 2022 Carrier. All rights reserved.
Edition Date: 04/22
Catalog No: CHT4A6S-01SI
A Carrier Company
Replaces:New
Manufacturer reserves the right to change, at any time, specifications and designs without notice and without obligations.