HEATING & COOLING PRODUCTS

**D5CVRA**

**Outdoor Unit Single Zone Ductless System**
**Sizes 9 to 36**

# Product Data

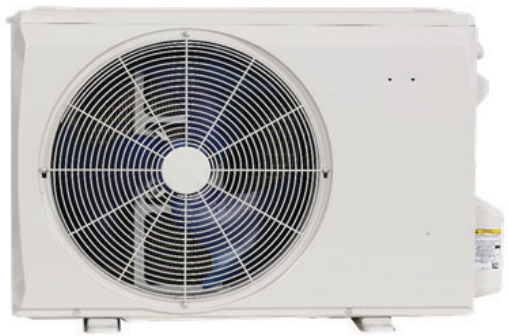

**Fig. 1 – Sizes 09K - 24K**

**NOTE:** Images are for illustration purposes only. Actual models may differ slightly.

## Table of Contents


INDUSTRY LEADING FEATURES / BENEFITS . . . . . 1
MODEL NUMBER NOMENCLATURE . . . . . 2
STANDARD FEATURES . . . . . 3
ACCESSORIES . . . . . 3
DIMENSIONS . . . . . 3
Table 1 – Dimensions and Weights (Heat Pump Models) . . . . . 3
CLEARANCES . . . . . 4
Table 2 – Outdoor Unit Clearance Dimensions . . . . . 4
APPLICATION DATA . . . . . 5
Table 3 – System Operating Conditions . . . . . 5
Table 4 – Additional Charge . . . . . 5
SPECFICATIONS . . . . . 6
CAPACITY AND COMPATIBILITY . . . . . 8
PERFORMANCE . . . . . 8
ELECTRICAL DATA . . . . . 8
COOLING PERFORMANCE DATA (HEAT PUMP) . . . . . 9
HEATING PERFORMANCE DATA (HEAT PUMP) . . . . . 42
WIRING . . . . . 50
WIRING DIAGRAMS . . . . . 50
GUIDE SPECIFICATIONS . . . . . 52


## INDUSTRY LEADING FEATURES / BENEFITS

### A PERFECT BALANCE BETWEEN BUDGET LIMITS, ENERGY SAVINGS AND COMFORT

The D5CVRA series ductless systems are a matched combination of an outdoor condensing unit and an indoor fan coil unit connected only by refrigerant tubing and wires.

A ductless system permits creative solutions to design problems such as:

- Add-ons to current space (an office or family room addition)
- Special space requirements
- When changes in the load cannot be handled by the existing system
- When adding air conditioning to spaces that are heated by hydronic or electric heat and have no ductwork
- Historical renovations or any application where preserving the look of the original structure is essential.

The ideal compliment to your ducted system when it is impractical or prohibitively expensive to use ductwork.

The compact indoor fan coil units take up very little space in the room and do not obstruct windows. The fan coils are attractively styled to blend with most room decors. Advanced system components incorporate innovative technology to provide reliable cooling performance at low sound levels.

### Inverter Technology

The inverter driven compressor is designed to run at various input power frequencies (Hz) which controls the compressor's motor speed.

**Even Temperature** – The control package, including the inverter, monitors the outdoor and indoor temperatures as they relate to the selected indoor set point and adjusts the compressor speed to match the load and keep the system operating continuously rather than cycling and creating temperature swings. This translates to higher comfort levels for the occupants.

**Rapid Pull Down/Warm-Up** – Comfort is increased by the inverter system's ability to ramp up the compressor speed enabling the system to reach the user selected room temperature set point quicker.

**Humidity Control** – Running the system for longer periods and continuously varying the compressor speed enhances the humidity control.

### Individual Room Comfort

Maximum comfort is provided because each space can be controlled individually based on the usage pattern.

### Low Sound Levels

When noise is a concern, ductless systems are the answer. The indoor units are whisper quiet. There are no compressors indoors, either in the conditioned space or directly over it, and there is none of the noise usually generated by air being forced through the ductwork.

When sound ordinances and proximity to neighbors demand quiet operation, the D5CVRA unit is the right choice. With the inverter technology, these units run at lower speeds most of the time resulting in reduced sound levels.

## Inverter Technology – Enhanced Economical Operation

Ductless systems are inherently economical to operate. Individual rooms are heated or cooled only when required, and since the air is delivered directly to the space, there is no need to use additional energy to move the air in the ductwork. This economical operation is enhanced further when the inverter system output matches the load resulting in a more efficient system.

## Easy-To-Use Controls

The systems have microprocessor-based controls to provide the ultimate in comfort and efficiency. The user friendly wired and wireless remote controls provide the interface between the user and the unit.

## Secure Operation

If security is an issue, outdoor and indoor units are connected only by refrigerant piping and wiring to prevent intruders from crawling through ductwork or wall openings. In addition, since the D5CVRA can be installed close to an outside wall, coils are protected from vandals and severe weather.

## Fast Installation

This compact ductless system is simple to install. Only wires and piping need to run between the indoor and outdoor units. These units are fast and easy to install ensuring minimal disruption to customers in homes or the workplace. This makes the D5CVRA systems the equipment of choice for retrofit applications.

## Simple Servicing and Maintenance

Removing the top panel of the outdoor unit provides immediate access to the control compartment, providing the service technician access to the diagnostic LEDs to facilitate the troubleshooting process. In addition, the draw-thru design of the outdoor unit means that dirt accumulates on the outside surface of the coil. Coils can be cleaned quickly from the inside using a pressure hose and detergent.

On the indoor units, service and maintenance expense is reduced due to the permanent easy to clean filters. Also, error codes are displayed on the front panel to alert the user to certain system malfunctions.

## Built-in Reliability

Ductless system indoor and outdoor units are designed to provide years of trouble-free operation. Both the indoor and outdoor units are well protected. Whenever the microprocessor detects abnormal conditions, the unit stops and an error code appears.

Inverter systems provide additional reliability due to the soft start. This refers to the ability of the inverter to start the compressor motor using reduced voltage and reduced current. This feature is beneficial from an electrical standpoint (eliminates current spikes) as well as an overall reliability standpoint due to reduced stress on all associated system components.

## Agency Listings

All systems are listed with AHRI (Air conditioning, Heating, and Refrigeration Institute) and are UL certified.

## MODEL NUMBER NOMENCLATURE

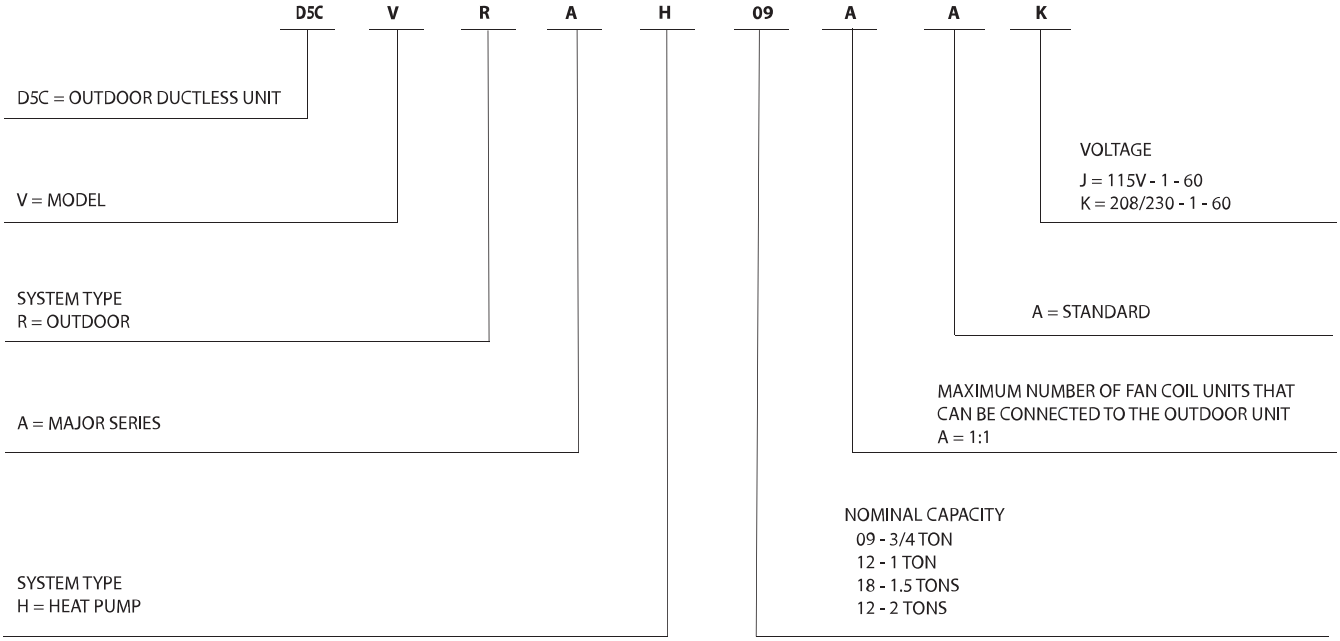


Use of the AHRI Certified TM Mark indicates a manufacturer's participation in the program For verification of certification for individual products, go to www.ahridirectory.org.

## STANDARD FEATURES

| | |
|---|---|
| **Ease Of Installation** | |
| Low Voltage Controls | S |
| **Comfort Features** | |
| Microprocessor Controls | S |
| Auto Restart Function | S |
| Auto Changeover | S |
| **Energy Saving Features** | |
| Inverter Driven Compressor | S |
| 46° F Heating Mode (Heating Setback) | S |
| **Safety And Reliability** | |
| 3 Minute Time Delay For Compressor | S |
| High Compressor Discharge Temperature | S |
| Low Voltage Protection | S |
| Compressor Overload Protection | S |
| Compressor Over Current Protection | S |
| IPM Module Protection | S |
| Condenser High Temp Protection in Cooling Mode | S |
| Aluminum Hydrophilic pre-coated fins | S |
| **Ease Of Service And Maintenance** | |
| Diagnostics | S |
| Liquid Line Pressure Taps | S |
| **Application Flexibility** | |
| Crankcase Heater | S |
| Base pan Heater on Heat Pump units only | S |

**Legend**
S - Standard
A - Accessory

## ACCESSORIES

| Outdoor Unit Model Number | Base Pan Base Rubber Plugs RCD Part No. | Quantity per Unit |
|---|---|---|
| D5CVRAH09AAJ | 12600801A00077 | 32 |
| D5CVRAH12AAJ | | |
| D5CVRAH09AAK | | |
| D5CVRAH12AAK | | |
| D5CVRAH18AAK | | 26 |
| D5CVRAH24AAK | | 34 |

**NOTE:** The base pan is built in with multiple holes for proper draining during the defrost process. For applications where it is required to seal these holes, and re-direct the condensate drain, rubber plugs are available through RC.

### Outdoor Units

#### Crankcase Unit

The crankcase heater is standard on all unit sizes. Heater clamps must be placed around the compressor oil stump.

#### Base Pan Heater

The base pan heater is standard on all unit sizes.

## DIMENSIONS

**Table 1 – Dimensions and Weights (Heat Pump Models)**

| System Size | | 9K 115V | 12K 115V | 9K | 12K | 18K | 24K |
|---|---|---|---|---|---|---|---|
| | | (115 V) | | (208/230 V) | | | |
| Height (H) | inch | 19.49 | 19.49 | 19.49 | 19.49 | 21.85 | 26.5 |
| | mm | 495 | 495 | 495 | 495 | 555 | 673 |
| Width (W) | inch | 28.35 | 28.35 | 28.35 | 28.35 | 30.12 | 35.04 |
| | mm | 720 | 720 | 720 | 720 | 765 | 890 |
| Depth (D) | inch | 10.63 | 10.63 | 10.63 | 10.63 | 11.93 | 13.46 |
| | mm | 270 | 270 | 270 | 270 | 303 | 342 |
| Weight -Net | lbs. | 53.35 | 53.79 | 51.59 | 51.59 | 62.17 | 96.34 |
| | kg | 24.2 | 24.4 | 23.4 | 23.4 | 28.2 | 43.7 |
| Mounting Dimensions A/B | A - inch (mm) | 17.8(452) | 17.8(452) | 17.8(452) | 17.8(452) | 17.8(452) | 26.1(663) |
| | B - inch (mm) | 10.0(255) | 10.0(255) | 10.0(255) | 10.0(255) | 11.3(286) | 13.9(354) |

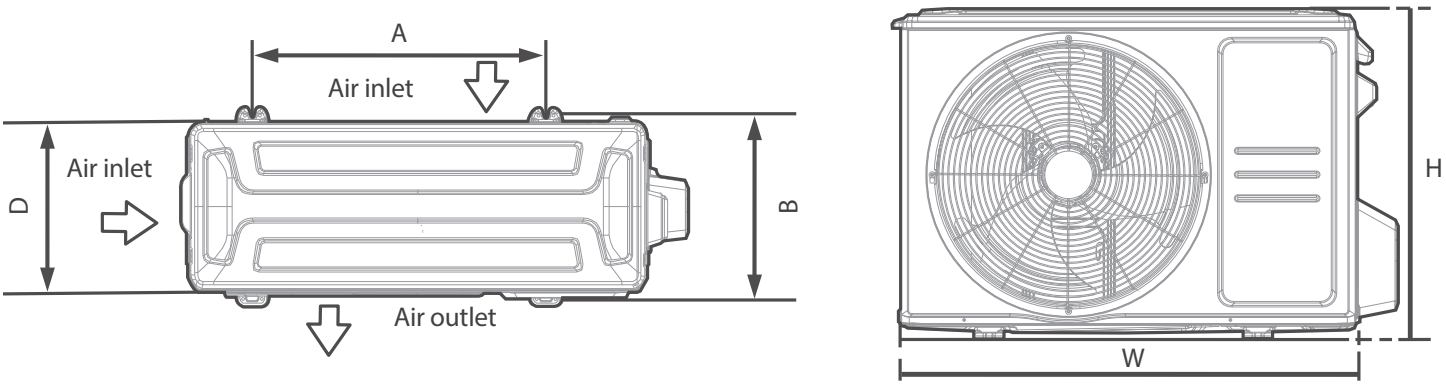


**Fig. 2 – System Sizes and Mounting Dimensions (all Models)**

Manufacturer reserves the right to change, at any time, specifications and designs without notice and without obligations.

## CLEARANCES

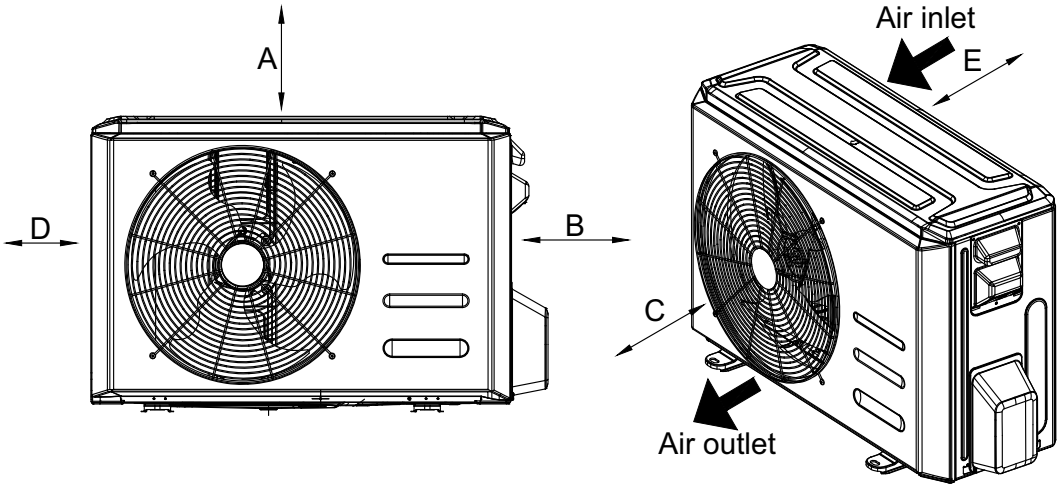


**Fig. 3 – Outdoor Unit Clearances**

**Table 2 – Outdoor Unit Clearance Dimensions**

| UNIT | MINIMUM VALUE in. (mm) |
|---|---|
| A | 20 (500) |
| B | 14 (350) |
| C | 20 (500) |
| D | 4 (100) |
| E | 4 (100) |

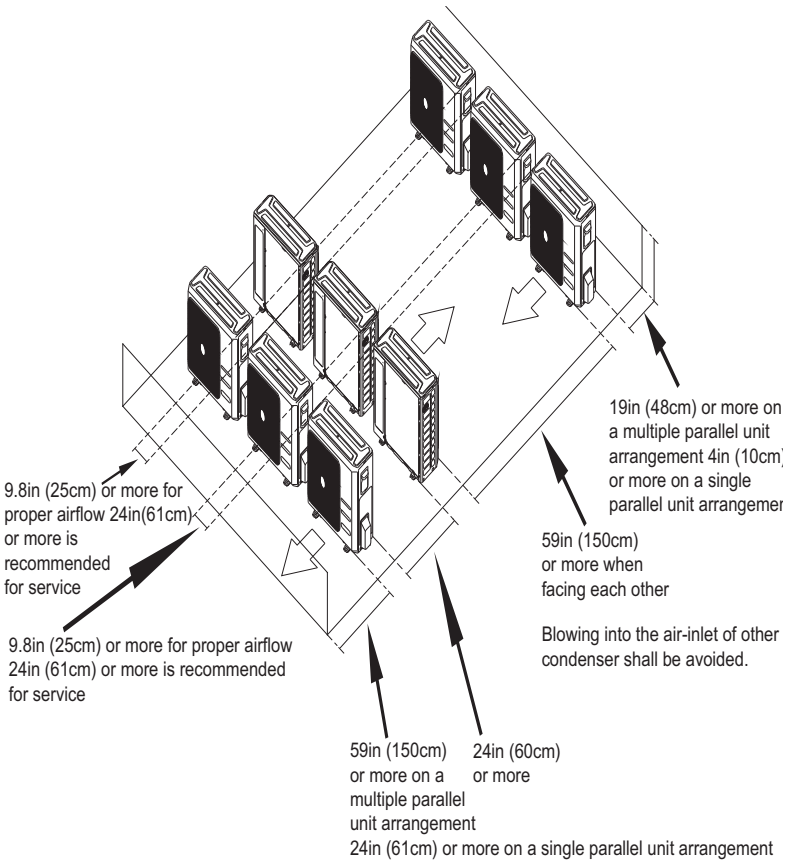


**Fig. 4 – Clearances for Multiple Units**

# APPLICATION DATA

## Unit Selection

Select equipment that either matches or supports slightly more than the anticipated peak load. This provides better humidity control, fewer unit cycles, and less part-load operation.

For units used in spaces with high sensible loads, base equipment selection on unit sensible load, not on total anticipated load. Adjust for anticipated room wet bulb temperature to avoid undersizing the equipment.

## Unit Mounting (Outdoor)

Refer to the unit's installation instructions for further details.

**Unit leveling** - For reliable operation, units should be level in all planes.

**Clearance** - Minimum clearance must be provided for airflow. The condensing units are designed for free-flow application. Air inlets and outlets should not be restricted.

**Unit location** - A location which is convenient to installation and not exposed to strong winds. A location that can bear the weight of the outdoor unit and where the outdoor unit can be mounted in a level position.

Do not install the indoor or outdoor units in a location with special environmental conditions. For those applications, contact your sales representative.

**Table 3 – System Operating Conditions**

| OPERATING RANGE MIN / MAX °F (°C) | | |
|---|---|---|
| | Cooling | Heating |
| Outdoor DB | 5 ~ 122 (-15 ~ 50) | 5 ~ 75 (-15 ~ 24) |

**NOTE:** Reference the product installation instructions for more information.

## Metering Devices

The outdoor unit utilizes a capillary tube to manage the connected fan coil's refrigerant flow.

## Drain Connections

Install drains to meet the local sanitation codes.

## Refrigerant Lines

**General refrigerant line sizing:**

1. The outdoor units are shipped with a full charge of R-454B refrigerant. All charges, line sizing, and capacities are based on runs of 25 ft. (7.6 m). For runs over 25 ft. (7.6 m), review the *Long Line Applications* section for the proper charge adjustments.
2. Refrigerant lines should not be buried in the ground. If it is necessary to bury the lines, do not bury more than 36-in (914 mm). Provide a minimum 6-in (152 mm) vertical rise to the service valves to prevent refrigerant migration.
3. Both lines must be insulated. Use a minimum of 1/2-in. (12.7 mm) thick insulation. Closed-cell insulation is recommended in all long-line applications.
4. Special consideration should be given to isolating the interconnecting tubing from the building structure. Isolate the tubing so vibration or noise is not transmitted into the structure.

**Long Line Applications:**

1. No change in line sizing is required.
2. Add refrigerant per the **Additional Charge** table.

**Table 4 – Additional Charge**

| Unit Size | Total Line Length ft. (m) | | Additional Charge, oz/ft. (g/m) | | | |
|---|---|---|---|---|---|---|
| | Min | Max | 10-25 (3-9) | >25-82 (8-25) | >82-98 (25-30) | >98-164 (30-50) |
| 9 | 10(3) | 82(25) | None | 0.16 | | |
| 12 | | | | | | |
| 18 | | 98(30) | | | 0.16 | |
| 24 | | 164(50) | | 0.32 | 0.32 | 0.32 |

# SPECFICATIONS

| Outdoor Model | | | D5CVRAH09AAJ | D5CVRAH12AAJ | D5CVRAH09AAK | D5CVRAH12AAK | D5CVRAH18AAK | D5CVRAH24AAK |
|---|---|---|---|---|---|---|---|---|
| Power supply | | V;Ph;Hz | 115V; 1Ph;60HZ | 115V; 1Ph;60HZ | 208/230V; 1Ph;60HZ | 208/230V; 1Ph;60HZ | 208/230V; 1Ph;60HZ | 208/230V; 1Ph;60HZ |
| COMPRESSOR SPECIFICATIONS | Model | | KSK103D33UEZ3 | KSK103D33UEZ3 | KSK103D33UEZ3 | KSK103D33UEZ3 | KSN140D21UFZ | KTM240D46UKT2 |
| | Type | | ROTARY | ROTARY | ROTARY | ROTARY | ROTARY | ROTARY |
| | Brand | | GMCC | GMCC | GMCC | GMCC | GMCC | GMCC |
| | Capacity | W | 2035/3255 | 2035/3255 | 2035/3255 | 2035/3255 | 4385 | 4780/7600 |
| | | Btu/h | 6943/11106 | 6943/11106 | 6943/11106 | 6943/11106 | 14962 | 16309/25931 |
| | Input | W | 325/826 | 325/826 | 325/826 | 325/826 | 1140 | 805/2045 |
| | RLA | A | 2.40/5.65 | 2.40/5.65 | 2.40/5.65 | 2.40/5.65 | 7.5 | 4.15/9.30 |
| | Refrigerant Oil | | ESTER OIL | ESTER OIL | ESTER OIL | ESTER OIL | ESTER OIL | ESTER OIL |
| | Oil Type | | VG74 | VG74 | VG74 | VG74 | VG74 | VG74 |
| | Oil Charge | fl. Oz | 10.48 | 10.48 | 10.48 | 10.48 | 14.88 | 20.97 |
| OUTDOOR FAN SPECIFICATIONS | Material | - | Acrylonitrile Styrene +20%GF | | | | | |
| | Type | - | ZL-415*129*8-3KN | ZL-415*129*8-3KN | ZL-415*129*8-3KN | ZL-415*129*8-3KN | ZL-421*133*8-3KN | ZL-535*133*12-3KFN |
| | Diameter | inch | 16.3 | 16.3 | 16.3 | 16.3 | 16.6 | 21.1 |
| | | mm | 415 | 415 | 415 | 415 | 421 | 535 |
| | Height | inch | 5.1 | 5.1 | 5.1 | 5.1 | 5.2 | 5.2 |
| | | mm | 129 | 129 | 129 | 129 | 133 | 133 |
| OUTDOOR MOTOR SPECIFICATIONS | Model | - | ZKFN-25-10-5L | ZKFN-34-10-1-3 | ZKFN-25-10-5L | ZKFN-25-10-5L | ZKFN-34-10-1-3 | ZKFN-80-8-3 |
| | Type | - | DC | DC | DC | DC | DC | DC |
| | Input | W | 49.3 | 35.0 | 42.1 | 42.1 | 35.0 | 112.3 |
| | Max. input | W | 135.0 | 81.0 | 135.0 | 135.0 | 81.0 | 239 |
| | Output | W | 37.0 | 26.3 | 31.6 | 31.6 | 26.3 | 84.2 |
| | FLA | A | 0.5 | 0.5 | 0.35 | 0.35 | 0.4 | 0.8 |
| | Rated HP | HP | 0.05 | 0.04 | 0.04 | 0.04 | 0.04 | 0.11 |
| | Range of current | Amps | 0.48~1.24 | 0.56~0.85 | 0.48~1.24 | 0.48~1.24 | 0.56~0.85 | 0.33~1.85 |
| | Rated current | Amps | 0.54 | 0.62 | 0.48 | 0.48 | 0.62 | 0.95 |
| | Speed | rev/min | 850/600 | 800/600 | 800/600 | 800/600 | 810/450 | 830/700/550 |
| | Rated RPM | rev/min | 850 | 800 | 800 | 800 | 810 | 830 |
| | Insulation class | - | E | E | E | E | E | E |
| | Safe class | - | IP24 | IP24 | IP24 | IP24 | IP24 | IPX4 |
| OUTDOOR REFRIGERANT COIL SPECIFICATIONS | Number of rows | Rows | 1 | 1 | 1 | 1 | 2 | 1.6 |
| | Tube outside dia. | inch | 0.276 | 0.276 | 0.276 | 0.276 | 0.276 | 0.276 |
| | | mm | Φ7 | Φ7 | Φ7 | Φ7 | Φ7 | Φ7 |
| | Nominal Tube Wall | mm | 0.00945 (0.24) | 0.00945 (0.24) | 0.00945 (0.24) | 0.00945 (0.24) | 0.00945 (0.24) | 0.00945 (0.24) |
| | Tube Enhancement | (Yes/No) | Yes | Yes | Yes | Yes | Yes | Yes |
| | Tube Material | | Copper | Copper | Copper | Copper | Copper | Copper |
| | Tube pitch(a) x row pitch (b) | inch | 0.83× 0.87 | 0.83× 0.87 | 0.83× 0.87 | 0.83× 0.87 | 0.83× 0.53 | 0.83× 0.87 |
| | | mm | 21x22 | 21x22 | 21x22 | 21x22 | 21x13.37 | 21x22 |
| | Fin Spacing | FPI | 20 | 20 | 20 | 20 | 19 | 20 |
| | | mm | 1.3 | 1.3 | 1.3 | 1.3 | 1.4 | 1.3 |
| | Fin type | | Plain fin | | | | | |
| | Fin Material | | Gold hydrophilic aluminum | | | | | |
| | Coil length x height x width | inch | 29.13x18.19x0.87 | 29.13x18.19x0.87 | 29.13x18.19x0.87 | 29.13x18.19x0.87 | 29.72x19.84x0.53+28.94x19.84x0.53 | 35.43x23.98x0.87+21.26x23.98x0.87 |
| | | mm | 740x462x22 | 740x462x22 | 740x462x22 | 740x462x22 | 755*504*13.37+735*504*13.37 | 900*609*22+540*609*22 |
| | Face area | ft2 | 3.68 | 3.68 | 3.68 | 3.68 | 4.10 | 5.90 |
| | Number of circuits | # | 2 | 2 | 2 | 2 | 4 | 5 |
| | High Burst Pressure | Psi (MPa) | 550(3.79) | 550(3.79) | 550(3.79) | 550(3.79) | 550(3.79) | 550(3.79) |
| | Low Burst Pressure | Psi (MPa) | 340(2.34) | 340(2.34) | 340(2.34) | 340(2.34) | 340(2.34) | 340(2.34) |

**Manufacturer reserves the right to change, at any time, specifications and designs without notice and without obligations.**

# SPECFICATIONS (CONTINUED)

| Outdoor Model | | | D5CVRAH09AAJ | D5CVRAH12AAJ | D5CVRAH09AAK | D5CVRAH12AAK | D5CVRAH18AAK | D5CVRAH24AAK |
|---|---|---|---|---|---|---|---|---|
| Piping and Refrigerant Information | Refrigerant Type | Type | R-454B | | | | | |
| | Charge Amount | lb. (kg) | 1.01(0.46) | 1.28(0.58) | 1.28(0.58) | 1.28(0.58) | 2.38(1.08) | 3.42(1.55) |
| | Additional refrigerant charge | Oz/ft (g/m) | 0.16(15) | 0.16(15) | 0.16(15) | 0.16(15) | 0.16(15) | 0.32(30) |
| | Liquid Pipe (size - connection type) | In (mm) | 1/4in (6.35mm) | 1/4in (6.35mm) | 1/4in (6.35mm) | 1/4in (6.35mm) | 1/4in (6.35mm) | 3/8in (9.52mm) |
| | Suction Pipe (size - connection type) | In (mm) | 3/8in (9.52mm) | 3/8in (9.52mm) | 3/8in (9.52mm) | 3/8in (9.52mm) | 1/2in (12.7mm) | 5/8in (15.9mm) |
| | Min. Piping Length | ft. (m) | 9.8 (3) | 9.8 (3) | 9.8 (3) | 9.8 (3) | 9.8 (3) | 9.8 (3) |
| | Standard Piping Length | ft. (m) | 24.6 (7.5) | 24.6 (7.5) | 24.6 (7.5) | 24.6 (7.5) | 24.6 (7.5) | 24.6 (7.5) |
| | Max. Piping Length with no additional refrigerant charge per System | ft. (m) | 24.6 (7.5) | 24.6 (7.5) | 24.6 (7.5) | 24.6 (7.5) | 24.6 (7.5) | 24.6 (7.5) |
| | Total Maximum Piping Length per system | ft. (m) | 82.02(25) | 82.02(25) | 82.02(25) | 82.02(25) | 98.42(30) | 164.04(50) |
| | Max. outdoor-indoor height difference (OU higher than IU) | ft. (m) | 49.21(15) | 49.21(15) | 49.21(15) | 49.21(15) | 65.62(20) | 82.02(25) |
| | Max. outdoor-indoor height difference (IU higher than OU) | ft. (m) | 49.21(15) | 49.21(15) | 49.21(15) | 49.21(15) | 65.62(20) | 82.02(25) |
| AIRFLOW SPECIFICATIONS | Outdoor (CFM) | CFM | 1059.4 | 1059.4 | 1059.4 | 1059.4 | 1236.0 | 1765.7 |
| SOUND DATA | Outdoor Sound Pressure Level | dB(A) | 54.5 | 52 | 54.5 | 54.5 | 57 | 60.5 |
| ENVIRONMENTAL SPECIFICATIONS | Cooling Operating Range: Indoor Min - Max DB | °F | 60~90 | 60~90 | 60~90 | 60~90 | 60~90 | 60~90 |
| | | (°C) | (16~32) | (16~32) | (16~32) | (16~32) | (16~32) | (16~32) |
| | Cooling Operating Range: Indoor Min - Max WB | °F | 59-84 | 59-84 | 59-84 | 59-84 | 59-84 | 59-84 |
| | | (°C) | (15-29) | (15-29) | (15-29) | (15-29) | (15-29) | (15-29) |
| | Cooling Operating Range: Outdoor Min - Max DB | °F | 5~122 | 5~122 | 5~122 | 5~122 | 5~122 | 5~122 |
| | | (°C) | (-15~50) | (-15~50) | (-15~50) | (-15~50) | (-15~50) | (-15~50) |
| | Heating Operating Range Indoor Min - Max DB | °F | 32~86 | 32~86 | 32~86 | 32~86 | 32~86 | 32~86 |
| | | (°C) | (0~30) | (0~30) | (0~30) | (0~30) | (0~30) | (0~30) |
| | Heating Operating Range Outdoor Min -Max DB | °F | 5~75 | 5~75 | 5~75 | 5~75 | 5~75 | 5~75 |
| | | (°C) | (-15~50) | (-15~50) | (-15~50) | (-15~50) | (-15~50) | (-15~50) |
| | Non-operating environment Storage Temperature range (DB) | °F | -49-140 | -49-140 | -49-140 | -49-140 | -49-140 | -49-140 |
| | | (°C) | (-45-60) | (-45-60) | (-45-60) | (-45-60) | (-45-60) | (-45-60) |
| | Operation Humidity | % | 0-80 % | 0-80 % | 0-80 % | 0-80 % | 0-80 % | 0-80 % |
| | Ambient Humidity | % | 0-80 % | 0-80 % | 0-80 % | 0-80 % | 0-80 % | 0-80 % |

**Manufacturer reserves the right to change, at any time, specifications and designs without notice and without obligations.**

## CAPACITY AND COMPATIBILITY

| MODEL SIZE | Voltage | HIGH WALL INDOOR UNIT WITH SENSORS | OUTDOOR UNIT | HIGH WALL INDOOR UNIT WITHOUT SENSORS | OUTDOOR UNIT |
|---|---|---|---|---|---|
| **9K** | **115** | D5FVHAH09XAJ | N/A | D5FVHAH09XCJ | D5CVRAH09AAJ |
| **12K** | **115** | D5FVHAH12XAJ | N/A | D5FVHAH12XCJ | D5CVRAH12AAJ |
| **9K** | **208/230** | D5FVHAH09XAK | D5CMTAH18CAK<br>D5CMTAH27DAK<br>D5CMTAH36EAK<br>D5CMTAH48FAK | D5FVHAH09XCK | D5CVRAH09AAK |
| **12K** | **208/230** | D5FVHAH12XAK | D5CMTAH18CAK<br>D5CMTAH27DAK<br>D5CMTAH36EAK<br>D5CMTAH48FAK | D5FVHAH12XCK | D5CVRAH12AAK |
| **18K** | **208/230** | D5FVHAH18XAK | D5CMTAH18CAK<br>D5CMTAH27DAK<br>D5CMTAH36EAK<br>D5CMTAH48FAK | D5FVHAH18XCK | D5CVRAH18AAK |
| **24K** | **208/230** | D5FVHAH24XAK | D5CMTAH27DAK<br>D5CMTAH36EAK<br>D5CMTAH48FAK | D5FVHAH24XCK | D5CVRAH24AAK |

## PERFORMANCE

| **Indoor unit type** | | **Value Tier High Wall** | | | | | |
|---|---|---|---|---|---|---|---|
| **Indoor model** | | **D5FVHAH09XAJ** | **D5FVHAH12XAJ** | **D5FVHAH09XAK** | **D5FVHAH12XAK** | **D5FVHAH18XAK** | **D5FVHAH24XAK** |
| **Outdoor model** | | **D5CVRAH09AAJ** | **D5CVRAH12AAJ** | **D5CVRAH09AAK** | **D5CVRAH12AAK** | **D5CVRAH18AAK** | **D5CVRAH24AAK** |
| **Power supply** | **V;Ph;Hz** | 115V;1Ph;60HZ | 115V;1Ph;60HZ | 208/230V;1Ph;60 HZ | 208/230V;1Ph;60 HZ | 208/230V;1Ph;60HZ | 208/230V;1Ph;60HZ |
| Cooling Rated Capacity (DOE A2 - 95°F) | Btu/h | 9000 | 12000 | 9000 | 12000 | 17000 | 24000 |
| Cooling Capacity Range | Btu/h | 2700~9900 | 3600~12500 | 3600~12500 | 3600~12500 | 6300~17900 | 6400~24200 |
| SEER2 | Btu/h.W | 18 | 19 | 19 | 18 | 18.3 | 17 |
| EER2 (DOE A2 - 95°F) | Btu/h.W | 10.1 | 8.8 | 10.9 | 8.8 | 9.9 | 9 |
| Heating Rated Capacity (DOE H12 - 47°F) | Btu/h | 9800 | 12000 | 10000 | 12000 | 18000 | 24000 |
| Heating Capacity Range | Btu/h | 3800~10600 | 3800~12400 | 3800~12400 | 3800~12400 | 4600~18800 | 5800~27000 |
| COP (DOE H12 - 47°F) | W/W | 2.65 | 2.84 | 3.37 | 2.89 | 2.88 | 2.78 |
| HSPF2 IV | Btu/h.W | 9 | 9.2 | 9.7 | 8.8 | 8.7 | 8.5 |
| HSPF2 V | Btu/h.W | 7 | 7 | 7.5 | 7 | 6.7 | 6.9 |
| Heating Rated Capacity (DOE H32 - 17°F) | Btu/h | 6900 | 7700 | 8000 | 8000 | 11200 | 17100 |
| COP (DOE H32 - 17°F) | W/W | 2.32 | 2.6 | 2.57 | 2.57 | 2.42 | 2.29 |
| Heating Maximum Capacity (17°F) | Btu/h | 7200 | 7900 | 8300 | 8300 | 11200 | 18400 |
| Heating Rated Capacity (ODE H42 - 5°F) | Btu/h | 6000 | 7000 | 7000 | 7000 | 10600 | 17100 |
| COP (DOE H42 - 5°F) | W/W | 1.83 | 2.2 | 2.15 | 2.2 | 2.1 | 2.01 |
| Heating Maximum Capacity (5°F) | Btu/h | 6000 | 7000 | 7000 | 7000 | 10600 | 17100 |

## ELECTRICAL DATA

| **Outdoor Unit** | | **9K** | **12K** | **9K** | **12K** | **18K** | **24K** |
|---|---|---|---|---|---|---|---|
| | | **(115V)** | | **(208/230V)** | | | |
| Minimum Circuit Ampacity (MCA) | A | 17 | 19.5 | 10 | 10 | 15 | 19 |
| Maximum Overcurrent Protection Ampacity (MOPA) | A | 20 | 20 | 15 | 15 | 20 | 20 |
| Voltage-Phase-Frequency | | 115-1-60 | | 208/230-1-60 | | | |
| Max – Min Voltage Range | | 127-104 | | 253-187 | | | |
| **Cooling** | | | | | | | |
| Running current | (A) | 9.4 | 14.1 | 3.7 | 5.9 | 7.6 | 11.4 |
| Power consumption | (W) | 892 | 1364 | 857 | 1364 | 1717 | 2667 |
| **Heating** | | | | | | | |
| Running current | (A) | 11.6 | 13.1 | 3.9 | 5.3 | 8.2 | 11 |
| Power consumption | (W) | 1083 | 1240 | 896 | 1218 | 1830 | 2530 |

**Manufacturer reserves the right to change, at any time, specifications and designs without notice and without obligations.**

# COOLING PERFORMANCE DATA (HEAT PUMP)

| AIRFLOW (CFM) | OUTDOOR DB °F (°C) | ID WB °F (°C) | 60.8°F(16.0°C) | | | | | 64.4°F(18.0°C) | | | | | 67°F(19.4°C) | | | | | 71.6°F(22.0°C) | | | | |
|---|---|---|---|---|---|---|---|---|---|---|---|---|---|---|---|---|---|---|---|---|---|---|
| | | ID DB °F (°C) | 73.4°F (23.0°C) | 77.0°F (25.0°C) | 80.0°F (26.7°C) | 80.6°F (27.0°C) | 84.2°F (29.0°C) | 73.4°F (23.0°C) | 77.0°F (25.0°C) | 80.0°F (26.7°C) | 80.6°F (27.0°C) | 84.2°F (29.0°C) | 73.4°F (23.0°C) | 77.0°F (25.0°C) | 80.0°F (26.7°C) | 80.6°F (27.0°C) | 84.2°F (29.0°C) | 73.4°F (23.0°C) | 77.0°F (25.0°C) | 80.0°F (26.7°C) | 80.6°F (27.0°C) | 84.2°F (29.0°C) |
| **9k (115V)** | | | | | | | | | | | | | | | | | | | | | | |
| 129 | 5°F (-15.0°C) | TC | 6872 | 6881 | 6888 | 6888 | 6898 | 7286 | 7294 | 7301 | 7303 | 7312 | 7721 | 7731 | 7740 | 7741 | 7750 | 8186 | 8195 | 8204 | 8205 | 8215 |
| | | S/T | 0.38 | 0.45 | 0.51 | 0.51 | 0.58 | 0.41 | 0.48 | 0.54 | 0.54 | 0.62 | 0.43 | 0.51 | 0.57 | 0.57 | 0.66 | 0.46 | 0.54 | 0.61 | 0.61 | 0.69 |
| | | PI | 0.35 | 0.35 | 0.35 | 0.35 | 0.35 | 0.37 | 0.37 | 0.37 | 0.37 | 0.37 | 0.39 | 0.39 | 0.39 | 0.39 | 0.39 | 0.41 | 0.41 | 0.42 | 0.42 | 0.42 |
| | 14°F (-10.0°C) | TC | 7587 | 7598 | 7606 | 7606 | 7616 | 8045 | 8054 | 8062 | 8064 | 8073 | 8525 | 8536 | 8546 | 8548 | 8557 | 9039 | 9049 | 9059 | 9060 | 9071 |
| | | S/T | 0.38 | 0.45 | 0.51 | 0.51 | 0.58 | 0.41 | 0.48 | 0.54 | 0.54 | 0.62 | 0.43 | 0.51 | 0.58 | 0.58 | 0.66 | 0.46 | 0.54 | 0.61 | 0.61 | 0.70 |
| | | PI | 0.34 | 0.34 | 0.34 | 0.34 | 0.34 | 0.36 | 0.36 | 0.36 | 0.36 | 0.36 | 0.38 | 0.38 | 0.38 | 0.38 | 0.38 | 0.40 | 0.40 | 0.40 | 0.40 | 0.40 |
| | 17°F (-8.3°C) | TC | 7826 | 7837 | 7845 | 7845 | 7856 | 8298 | 8308 | 8316 | 8317 | 8327 | 8794 | 8805 | 8815 | 8816 | 8826 | 9323 | 9334 | 9344 | 9345 | 9357 |
| | | S/T | 0.39 | 0.45 | 0.51 | 0.51 | 0.59 | 0.41 | 0.48 | 0.54 | 0.55 | 0.62 | 0.43 | 0.51 | 0.58 | 0.58 | 0.66 | 0.46 | 0.54 | 0.61 | 0.61 | 0.70 |
| | | PI | 0.33 | 0.33 | 0.33 | 0.33 | 0.33 | 0.35 | 0.35 | 0.35 | 0.35 | 0.35 | 0.37 | 0.37 | 0.38 | 0.38 | 0.38 | 0.40 | 0.40 | 0.40 | 0.40 | 0.40 |
| | 23°F (-5.0°C) | TC | 7726 | 7737 | 7745 | 7746 | 7756 | 8192 | 8202 | 8210 | 8212 | 8221 | 8682 | 8693 | 8702 | 8704 | 8714 | 9205 | 9215 | 9225 | 9226 | 9238 |
| | | S/T | 0.39 | 0.45 | 0.52 | 0.52 | 0.59 | 0.41 | 0.48 | 0.55 | 0.55 | 0.62 | 0.44 | 0.51 | 0.58 | 0.58 | 0.66 | 0.46 | 0.54 | 0.62 | 0.62 | 0.70 |
| | | PI | 0.38 | 0.38 | 0.38 | 0.38 | 0.38 | 0.40 | 0.40 | 0.40 | 0.40 | 0.40 | 0.42 | 0.42 | 0.43 | 0.43 | 0.43 | 0.45 | 0.45 | 0.45 | 0.45 | 0.45 |
| | 35°F (1.7°C) | TC | 7527 | 7537 | 7545 | 7546 | 7556 | 7981 | 7990 | 7998 | 8000 | 8009 | 8458 | 8468 | 8478 | 8480 | 8489 | 8967 | 8977 | 8987 | 8988 | 8999 |
| | | S/T | 0.39 | 0.46 | 0.52 | 0.52 | 0.59 | 0.41 | 0.48 | 0.55 | 0.55 | 0.63 | 0.44 | 0.51 | 0.58 | 0.58 | 0.67 | 0.46 | 0.54 | 0.62 | 0.62 | 0.71 |
| | | PI | 0.47 | 0.47 | 0.47 | 0.47 | 0.47 | 0.50 | 0.50 | 0.50 | 0.50 | 0.50 | 0.52 | 0.53 | 0.53 | 0.53 | 0.53 | 0.56 | 0.56 | 0.56 | 0.56 | 0.56 |
| | 41°F (5.0°C) | TC | 7545 | 7555 | 7563 | 7564 | 7574 | 8000 | 8009 | 8017 | 8019 | 8028 | 8478 | 8489 | 8498 | 8500 | 8509 | 8988 | 8998 | 9008 | 9009 | 9021 |
| | | S/T | 0.39 | 0.46 | 0.52 | 0.52 | 0.59 | 0.41 | 0.49 | 0.55 | 0.55 | 0.63 | 0.44 | 0.51 | 0.58 | 0.58 | 0.67 | 0.46 | 0.55 | 0.62 | 0.62 | 0.71 |
| | | PI | 0.42 | 0.42 | 0.42 | 0.42 | 0.42 | 0.44 | 0.44 | 0.44 | 0.44 | 0.44 | 0.47 | 0.47 | 0.47 | 0.47 | 0.47 | 0.50 | 0.50 | 0.50 | 0.50 | 0.50 |
| | 47°F (8.3°C) | TC | 7563 | 7573 | 7581 | 7582 | 7592 | 8019 | 8028 | 8036 | 8038 | 8047 | 8498 | 8509 | 8518 | 8520 | 8529 | 9010 | 9020 | 9029 | 9031 | 9042 |
| | | S/T | 0.39 | 0.46 | 0.52 | 0.52 | 0.60 | 0.41 | 0.49 | 0.55 | 0.55 | 0.63 | 0.44 | 0.52 | 0.59 | 0.59 | 0.67 | 0.47 | 0.55 | 0.62 | 0.62 | 0.71 |
| | | PI | 0.37 | 0.37 | 0.37 | 0.37 | 0.37 | 0.39 | 0.39 | 0.39 | 0.39 | 0.39 | 0.41 | 0.41 | 0.41 | 0.41 | 0.41 | 0.44 | 0.44 | 0.44 | 0.44 | 0.44 |
| | 50°F (10.0°C) | TC | 7590 | 7600 | 7609 | 7609 | 7619 | 8048 | 8057 | 8065 | 8067 | 8076 | 8528 | 8539 | 8549 | 8551 | 8560 | 9042 | 9052 | 9062 | 9063 | 9075 |
| | | S/T | 0.39 | 0.46 | 0.52 | 0.52 | 0.60 | 0.42 | 0.49 | 0.56 | 0.56 | 0.63 | 0.44 | 0.52 | 0.59 | 0.59 | 0.67 | 0.47 | 0.55 | 0.62 | 0.62 | 0.71 |
| | | PI | 0.38 | 0.38 | 0.38 | 0.38 | 0.38 | 0.40 | 0.40 | 0.40 | 0.40 | 0.40 | 0.43 | 0.43 | 0.43 | 0.43 | 0.43 | 0.45 | 0.45 | 0.45 | 0.45 | 0.45 |
| | 59°F (15.0°C) | TC | 7672 | 7682 | 7690 | 7690 | 7701 | 8134 | 8143 | 8152 | 8153 | 8163 | 8620 | 8631 | 8641 | 8642 | 8652 | 9139 | 9149 | 9159 | 9160 | 9172 |
| | | S/T | 0.40 | 0.46 | 0.53 | 0.53 | 0.60 | 0.42 | 0.49 | 0.56 | 0.56 | 0.64 | 0.44 | 0.52 | 0.59 | 0.59 | 0.68 | 0.47 | 0.55 | 0.63 | 0.63 | 0.72 |
| | | PI | 0.42 | 0.42 | 0.42 | 0.42 | 0.42 | 0.45 | 0.45 | 0.45 | 0.45 | 0.45 | 0.47 | 0.48 | 0.48 | 0.48 | 0.48 | 0.50 | 0.50 | 0.50 | 0.50 | 0.50 |
| | 68°F (20.0°C) | TC | 7753 | 7763 | 7772 | 7772 | 7783 | 8220 | 8230 | 8238 | 8240 | 8249 | 8711 | 8723 | 8732 | 8734 | 8744 | 9236 | 9246 | 9256 | 9258 | 9269 |
| | | S/T | 0.41 | 0.48 | 0.54 | 0.54 | 0.62 | 0.43 | 0.50 | 0.57 | 0.57 | 0.65 | 0.46 | 0.54 | 0.61 | 0.61 | 0.69 | 0.48 | 0.57 | 0.64 | 0.64 | 0.73 |
| | | PI | 0.47 | 0.47 | 0.47 | 0.47 | 0.47 | 0.49 | 0.49 | 0.49 | 0.49 | 0.49 | 0.52 | 0.52 | 0.52 | 0.52 | 0.52 | 0.55 | 0.55 | 0.56 | 0.56 | 0.56 |
| | 77°F (25.0°C) | TC | 7834 | 7845 | 7853 | 7854 | 7864 | 8307 | 8316 | 8325 | 8326 | 8336 | 8803 | 8814 | 8824 | 8826 | 8836 | 9333 | 9343 | 9353 | 9355 | 9367 |
| | | S/T | 0.41 | 0.48 | 0.55 | 0.55 | 0.63 | 0.44 | 0.51 | 0.58 | 0.58 | 0.66 | 0.46 | 0.54 | 0.62 | 0.62 | 0.70 | 0.49 | 0.57 | 0.65 | 0.65 | 0.74 |
| | | PI | 0.51 | 0.51 | 0.51 | 0.51 | 0.51 | 0.54 | 0.54 | 0.54 | 0.54 | 0.54 | 0.57 | 0.57 | 0.57 | 0.57 | 0.57 | 0.61 | 0.61 | 0.61 | 0.61 | 0.61 |
| | 82°F (27.8°C) | TC | 7743 | 7753 | 7762 | 7762 | 7772 | 8209 | 8219 | 8227 | 8229 | 8239 | 8700 | 8711 | 8721 | 8722 | 8732 | 9224 | 9234 | 9244 | 9246 | 9257 |
| | | S/T | 0.42 | 0.49 | 0.56 | 0.56 | 0.63 | 0.44 | 0.52 | 0.59 | 0.59 | 0.67 | 0.47 | 0.55 | 0.62 | 0.62 | 0.71 | 0.50 | 0.58 | 0.66 | 0.66 | 0.75 |
| | | PI | 0.56 | 0.56 | 0.56 | 0.56 | 0.56 | 0.59 | 0.59 | 0.59 | 0.59 | 0.59 | 0.62 | 0.62 | 0.63 | 0.63 | 0.63 | 0.66 | 0.66 | 0.66 | 0.66 | 0.66 |
| | 86°F (30.0°C) | TC | 7497 | 7507 | 7515 | 7515 | 7525 | 7949 | 7958 | 7966 | 7967 | 7977 | 8423 | 8434 | 8444 | 8445 | 8455 | 8931 | 8941 | 8950 | 8952 | 8963 |
| | | S/T | 0.42 | 0.49 | 0.56 | 0.56 | 0.64 | 0.45 | 0.52 | 0.60 | 0.60 | 0.68 | 0.47 | 0.56 | 0.63 | 0.63 | 0.72 | 0.50 | 0.59 | 0.67 | 0.67 | 0.76 |
| | | PI | 0.62 | 0.62 | 0.62 | 0.62 | 0.63 | 0.66 | 0.66 | 0.66 | 0.66 | 0.66 | 0.70 | 0.70 | 0.70 | 0.70 | 0.70 | 0.74 | 0.74 | 0.74 | 0.74 | 0.74 |

Manufacturer reserves the right to change, at any time, specifications and designs without notice and without obligations.

# COOLING PERFORMANCE DATA (HEAT PUMP) (CONTINUED)

| AIRFLOW (CFM) | OUTDOOR DB °F (°C) | ID WB °F (°C) | 60.8°F(16.0°C) | | | | | 64.4°F(18.0°C) | | | | | 67°F(19.4°C) | | | | | 71.6°F(22.0°C) | | | | |
|---|---|---|---|---|---|---|---|---|---|---|---|---|---|---|---|---|---|---|---|---|---|---|
| | | ID DB °F (°C) | 73.4°F (23.0°C) | 77.0°F (25.0°C) | 80.0°F (26.7°C) | 80.6°F (27.0°C) | 84.2°F (29.0°C) | 73.4°F (23.0°C) | 77.0°F (25.0°C) | 80.0°F (26.7°C) | 80.6°F (27.0°C) | 84.2°F (29.0°C) | 73.4°F (23.0°C) | 77.0°F (25.0°C) | 80.0°F (26.7°C) | 80.6°F (27.0°C) | 84.2°F (29.0°C) | 73.4°F (23.0°C) | 77.0°F (25.0°C) | 80.0°F (26.7°C) | 80.6°F (27.0°C) | 84.2°F (29.0°C) |
| 129 | 95°F (35.0°C) | TC | 6943 | 6953 | 6960 | 6960 | 6970 | 7362 | 7370 | 7378 | 7379 | 7388 | 7802 | 7812 | 7820 | 7822 | 7831 | 8272 | 8281 | 8290 | 8291 | 8301 |
| | | S/T | 0.42 | 0.49 | 0.56 | 0.56 | 0.64 | 0.45 | 0.52 | 0.60 | 0.60 | 0.68 | 0.47 | 0.56 | 0.63 | 0.63 | 0.72 | 0.50 | 0.59 | 0.67 | 0.67 | 0.76 |
| | | PI | 0.77 | 0.78 | 0.78 | 0.78 | 0.78 | 0.82 | 0.82 | 0.82 | 0.82 | 0.82 | 0.87 | 0.87 | 0.87 | 0.87 | 0.87 | 0.92 | 0.92 | 0.93 | 0.93 | 0.93 |
| | 104°F (40.0°C) | TC | 6264 | 6273 | 6280 | 6280 | 6288 | 6642 | 6650 | 6656 | 6658 | 6666 | 7039 | 7048 | 7056 | 7057 | 7065 | 7463 | 7471 | 7479 | 7480 | 7490 |
| | | S/T | 0.43 | 0.51 | 0.58 | 0.58 | 0.66 | 0.46 | 0.54 | 0.61 | 0.61 | 0.70 | 0.49 | 0.57 | 0.65 | 0.65 | 0.74 | 0.51 | 0.60 | 0.69 | 0.69 | 0.78 |
| | | PI | 0.79 | 0.79 | 0.79 | 0.79 | 0.80 | 0.84 | 0.84 | 0.84 | 0.84 | 0.84 | 0.89 | 0.89 | 0.89 | 0.89 | 0.89 | 0.94 | 0.95 | 0.95 | 0.95 | 0.95 |
| | 110°F (43.0°C) | TC | 5857 | 5865 | 5871 | 5872 | 5879 | 6210 | 6217 | 6224 | 6225 | 6232 | 6581 | 6590 | 6597 | 6598 | 6606 | 6978 | 6985 | 6993 | 6994 | 7003 |
| | | S/T | 0.45 | 0.53 | 0.60 | 0.60 | 0.68 | 0.48 | 0.56 | 0.63 | 0.63 | 0.72 | 0.50 | 0.59 | 0.67 | 0.67 | 0.77 | 0.53 | 0.63 | 0.71 | 0.71 | 0.81 |
| | | PI | 0.80 | 0.80 | 0.80 | 0.80 | 0.81 | 0.85 | 0.85 | 0.85 | 0.85 | 0.85 | 0.90 | 0.90 | 0.90 | 0.90 | 0.91 | 0.96 | 0.96 | 0.96 | 0.96 | 0.96 |
| | 115°F (46.0°C) | TC | 4695 | 4702 | 4707 | 4707 | 4713 | 4978 | 4984 | 4989 | 4990 | 4996 | 5276 | 5283 | 5288 | 5289 | 5295 | 5594 | 5600 | 5606 | 5607 | 5614 |
| | | S/T | 0.45 | 0.53 | 0.60 | 0.60 | 0.69 | 0.48 | 0.56 | 0.64 | 0.64 | 0.73 | 0.51 | 0.60 | 0.68 | 0.68 | 0.77 | 0.54 | 0.63 | 0.72 | 0.72 | 0.82 |
| | | PI | 0.67 | 0.67 | 0.67 | 0.67 | 0.67 | 0.71 | 0.71 | 0.71 | 0.71 | 0.71 | 0.75 | 0.75 | 0.75 | 0.75 | 0.76 | 0.80 | 0.80 | 0.80 | 0.80 | 0.80 |
| | 122°F (50.0°C) | TC | 3146 | 3150 | 3154 | 3154 | 3158 | 3336 | 3340 | 3343 | 3344 | 3348 | 3535 | 3540 | 3544 | 3544 | 3548 | 3748 | 3752 | 3756 | 3757 | 3762 |
| | | S/T | 0.46 | 0.54 | 0.62 | 0.62 | 0.71 | 0.49 | 0.58 | 0.66 | 0.66 | 0.75 | 0.52 | 0.61 | 0.70 | 0.70 | 0.79 | 0.55 | 0.65 | 0.74 | 0.74 | 0.84 |
| | | PI | 0.49 | 0.49 | 0.49 | 0.49 | 0.49 | 0.52 | 0.52 | 0.52 | 0.52 | 0.52 | 0.55 | 0.55 | 0.55 | 0.55 | 0.56 | 0.59 | 0.59 | 0.59 | 0.59 | 0.59 |
| 171 | 5°F (-15.0°C) | TC | 7434 | 7444 | 7452 | 7452 | 7462 | 7882 | 7891 | 7899 | 7901 | 7910 | 8353 | 8364 | 8373 | 8374 | 8384 | 8856 | 8866 | 8875 | 8877 | 8888 |
| | | S/T | 0.42 | 0.49 | 0.55 | 0.55 | 0.63 | 0.44 | 0.52 | 0.59 | 0.59 | 0.67 | 0.47 | 0.55 | 0.62 | 0.62 | 0.71 | 0.49 | 0.58 | 0.66 | 0.66 | 0.75 |
| | | PI | 0.38 | 0.38 | 0.38 | 0.38 | 0.38 | 0.40 | 0.40 | 0.40 | 0.40 | 0.40 | 0.42 | 0.42 | 0.42 | 0.42 | 0.42 | 0.45 | 0.45 | 0.45 | 0.45 | 0.45 |
| | 14°F (-10.0°C) | TC | 8208 | 8219 | 8228 | 8229 | 8240 | 8703 | 8713 | 8722 | 8724 | 8734 | 9223 | 9235 | 9245 | 9247 | 9257 | 9779 | 9789 | 9800 | 9802 | 9814 |
| | | S/T | 0.42 | 0.49 | 0.55 | 0.55 | 0.63 | 0.44 | 0.52 | 0.59 | 0.59 | 0.67 | 0.47 | 0.55 | 0.62 | 0.62 | 0.71 | 0.50 | 0.58 | 0.66 | 0.66 | 0.75 |
| | | PI | 0.36 | 0.36 | 0.37 | 0.37 | 0.37 | 0.39 | 0.39 | 0.39 | 0.39 | 0.39 | 0.41 | 0.41 | 0.41 | 0.41 | 0.41 | 0.43 | 0.43 | 0.43 | 0.44 | 0.44 |
| | 17°F (-8.3°C) | TC | 8467 | 8478 | 8487 | 8487 | 8499 | 8977 | 8987 | 8996 | 8998 | 9009 | 9513 | 9525 | 9536 | 9538 | 9549 | 10086 | 10097 | 10108 | 10110 | 10122 |
| | | S/T | 0.42 | 0.49 | 0.56 | 0.56 | 0.63 | 0.44 | 0.52 | 0.59 | 0.59 | 0.67 | 0.47 | 0.55 | 0.62 | 0.63 | 0.71 | 0.50 | 0.58 | 0.66 | 0.66 | 0.76 |
| | | PI | 0.36 | 0.36 | 0.36 | 0.36 | 0.36 | 0.38 | 0.38 | 0.38 | 0.38 | 0.38 | 0.40 | 0.41 | 0.41 | 0.41 | 0.41 | 0.43 | 0.43 | 0.43 | 0.43 | 0.43 |
| | 23°F (-5.0°C) | TC | 8359 | 8370 | 8379 | 8379 | 8391 | 8862 | 8873 | 8882 | 8883 | 8894 | 9392 | 9404 | 9415 | 9416 | 9427 | 9958 | 9969 | 9980 | 9981 | 9993 |
| | | S/T | 0.42 | 0.49 | 0.56 | 0.56 | 0.64 | 0.44 | 0.52 | 0.59 | 0.59 | 0.68 | 0.47 | 0.55 | 0.63 | 0.63 | 0.72 | 0.50 | 0.59 | 0.67 | 0.67 | 0.76 |
| | | PI | 0.41 | 0.41 | 0.41 | 0.41 | 0.41 | 0.43 | 0.43 | 0.43 | 0.43 | 0.43 | 0.46 | 0.46 | 0.46 | 0.46 | 0.46 | 0.49 | 0.49 | 0.49 | 0.49 | 0.49 |
| | 35°F (1.7°C) | TC | 8143 | 8154 | 8163 | 8163 | 8174 | 8634 | 8644 | 8653 | 8654 | 8665 | 9150 | 9161 | 9172 | 9173 | 9184 | 9701 | 9711 | 9722 | 9723 | 9736 |
| | | S/T | 0.42 | 0.49 | 0.56 | 0.56 | 0.64 | 0.45 | 0.52 | 0.60 | 0.60 | 0.68 | 0.47 | 0.56 | 0.63 | 0.63 | 0.72 | 0.50 | 0.59 | 0.67 | 0.67 | 0.76 |
| | | PI | 0.51 | 0.51 | 0.51 | 0.51 | 0.51 | 0.54 | 0.54 | 0.54 | 0.54 | 0.54 | 0.57 | 0.57 | 0.57 | 0.57 | 0.57 | 0.60 | 0.60 | 0.60 | 0.60 | 0.60 |
| | 41°F (5.0°C) | TC | 8162 | 8173 | 8182 | 8183 | 8194 | 8654 | 8665 | 8673 | 8675 | 8685 | 9171 | 9183 | 9194 | 9195 | 9206 | 9724 | 9735 | 9745 | 9747 | 9759 |
| | | S/T | 0.42 | 0.50 | 0.56 | 0.56 | 0.64 | 0.45 | 0.53 | 0.60 | 0.60 | 0.68 | 0.47 | 0.56 | 0.63 | 0.63 | 0.72 | 0.50 | 0.59 | 0.67 | 0.67 | 0.76 |
| | | PI | 0.45 | 0.45 | 0.45 | 0.45 | 0.45 | 0.48 | 0.48 | 0.48 | 0.48 | 0.48 | 0.51 | 0.51 | 0.51 | 0.51 | 0.51 | 0.54 | 0.54 | 0.54 | 0.54 | 0.54 |
| | 47°F (8.3°C) | TC | 8182 | 8193 | 8202 | 8202 | 8213 | 8675 | 8685 | 8694 | 8696 | 8706 | 9193 | 9205 | 9215 | 9217 | 9227 | 9747 | 9758 | 9768 | 9770 | 9782 |
| | | S/T | 0.42 | 0.50 | 0.56 | 0.56 | 0.64 | 0.45 | 0.53 | 0.60 | 0.60 | 0.68 | 0.48 | 0.56 | 0.63 | 0.63 | 0.72 | 0.50 | 0.59 | 0.67 | 0.67 | 0.77 |
| | | PI | 0.40 | 0.40 | 0.40 | 0.40 | 0.40 | 0.42 | 0.42 | 0.42 | 0.42 | 0.42 | 0.44 | 0.44 | 0.45 | 0.45 | 0.45 | 0.47 | 0.47 | 0.47 | 0.47 | 0.47 |
| | 50°F (10.0°C) | TC | 8211 | 8222 | 8231 | 8231 | 8243 | 8706 | 8716 | 8725 | 8727 | 8737 | 9226 | 9238 | 9248 | 9250 | 9261 | 9782 | 9793 | 9803 | 9805 | 9817 |
| | | S/T | 0.43 | 0.50 | 0.57 | 0.57 | 0.65 | 0.45 | 0.53 | 0.60 | 0.60 | 0.69 | 0.48 | 0.56 | 0.64 | 0.64 | 0.73 | 0.51 | 0.59 | 0.68 | 0.68 | 0.77 |
| | | PI | 0.41 | 0.41 | 0.41 | 0.41 | 0.41 | 0.44 | 0.44 | 0.44 | 0.44 | 0.44 | 0.46 | 0.46 | 0.46 | 0.46 | 0.46 | 0.49 | 0.49 | 0.49 | 0.49 | 0.49 |

Manufacturer reserves the right to change, at any time, specifications and designs without notice and without obligations.

# COOLING PERFORMANCE DATA (HEAT PUMP) (CONTINUED)

| AIRFLOW (CFM) | OUTDOOR DB °F (°C) | ID WB °F (°C) | 60.8°F(16.0°C) | | | | | 64.4°F(18.0°C) | | | | | 67°F(19.4°C) | | | | | 71.6°F(22.0°C) | | | | |
|---|---|---|---|---|---|---|---|---|---|---|---|---|---|---|---|---|---|---|---|---|---|---|
| | | ID DB °F (°C) | 73.4°F (23.0°C) | 77.0°F (25.0°C) | 80.0°F (26.7°C) | 80.6°F (27.0°C) | 84.2°F (29.0°C) | 73.4°F (23.0°C) | 77.0°F (25.0°C) | 80.0°F (26.7°C) | 80.6°F (27.0°C) | 84.2°F (29.0°C) | 73.4°F (23.0°C) | 77.0°F (25.0°C) | 80.0°F (26.7°C) | 80.6°F (27.0°C) | 84.2°F (29.0°C) | 73.4°F (23.0°C) | 77.0°F (25.0°C) | 80.0°F (26.7°C) | 80.6°F (27.0°C) | 84.2°F (29.0°C) |
| 171 | 59°F (15.0°C) | TC | 8299 | 8310 | 8319 | 8320 | 8331 | 8799 | 8810 | 8819 | 8820 | 8831 | 9325 | 9337 | 9348 | 9349 | 9360 | 9887 | 9898 | 9909 | 9910 | 9922 |
| | | S/T | 0.43 | 0.50 | 0.57 | 0.57 | 0.65 | 0.45 | 0.53 | 0.60 | 0.60 | 0.69 | 0.48 | 0.56 | 0.64 | 0.64 | 0.73 | 0.51 | 0.60 | 0.68 | 0.68 | 0.77 |
| | | PI | 0.46 | 0.46 | 0.46 | 0.46 | 0.46 | 0.48 | 0.49 | 0.49 | 0.49 | 0.49 | 0.51 | 0.51 | 0.51 | 0.51 | 0.52 | 0.54 | 0.54 | 0.55 | 0.55 | 0.55 |
| | 68°F (20.0°C) | TC | 8387 | 8399 | 8408 | 8408 | 8419 | 8893 | 8903 | 8912 | 8914 | 8925 | 9424 | 9436 | 9447 | 9449 | 9459 | 9992 | 10003 | 10014 | 10015 | 10028 |
| | | S/T | 0.44 | 0.52 | 0.59 | 0.59 | 0.67 | 0.47 | 0.55 | 0.62 | 0.62 | 0.71 | 0.49 | 0.58 | 0.66 | 0.66 | 0.75 | 0.52 | 0.61 | 0.70 | 0.70 | 0.80 |
| | | PI | 0.50 | 0.50 | 0.50 | 0.50 | 0.51 | 0.53 | 0.53 | 0.53 | 0.53 | 0.54 | 0.57 | 0.57 | 0.57 | 0.57 | 0.57 | 0.60 | 0.60 | 0.60 | 0.60 | 0.60 |
| | 77°F (25.0°C) | TC | 8475 | 8487 | 8496 | 8496 | 8508 | 8986 | 8997 | 9006 | 9008 | 9018 | 9523 | 9535 | 9546 | 9548 | 9559 | 10097 | 10108 | 10119 | 10120 | 10133 |
| | | S/T | 0.44 | 0.52 | 0.59 | 0.59 | 0.68 | 0.47 | 0.55 | 0.63 | 0.63 | 0.72 | 0.50 | 0.59 | 0.67 | 0.67 | 0.76 | 0.53 | 0.62 | 0.71 | 0.71 | 0.81 |
| | | PI | 0.55 | 0.55 | 0.55 | 0.55 | 0.55 | 0.58 | 0.58 | 0.58 | 0.58 | 0.58 | 0.62 | 0.62 | 0.62 | 0.62 | 0.62 | 0.65 | 0.66 | 0.66 | 0.66 | 0.66 |
| | 82°F (27.8°C) | TC | 8376 | 8388 | 8397 | 8397 | 8408 | 8881 | 8892 | 8900 | 8902 | 8913 | 9412 | 9424 | 9434 | 9436 | 9447 | 9979 | 9990 | 10001 | 10002 | 10015 |
| | | S/T | 0.45 | 0.53 | 0.60 | 0.60 | 0.68 | 0.48 | 0.56 | 0.64 | 0.64 | 0.73 | 0.51 | 0.59 | 0.68 | 0.68 | 0.77 | 0.54 | 0.63 | 0.72 | 0.72 | 0.82 |
| | | PI | 0.60 | 0.60 | 0.60 | 0.60 | 0.60 | 0.64 | 0.64 | 0.64 | 0.64 | 0.64 | 0.67 | 0.68 | 0.68 | 0.68 | 0.68 | 0.72 | 0.72 | 0.72 | 0.72 | 0.72 |
| | 86°F (30.0°C) | TC | 8110 | 8121 | 8130 | 8130 | 8141 | 8599 | 8609 | 8618 | 8619 | 8630 | 9113 | 9125 | 9135 | 9136 | 9147 | 9662 | 9672 | 9683 | 9684 | 9696 |
| | | S/T | 0.46 | 0.54 | 0.61 | 0.61 | 0.69 | 0.48 | 0.57 | 0.64 | 0.64 | 0.74 | 0.51 | 0.60 | 0.68 | 0.68 | 0.78 | 0.54 | 0.64 | 0.72 | 0.72 | 0.83 |
| | | PI | 0.67 | 0.67 | 0.68 | 0.68 | 0.68 | 0.71 | 0.72 | 0.72 | 0.72 | 0.72 | 0.76 | 0.76 | 0.76 | 0.76 | 0.76 | 0.80 | 0.80 | 0.80 | 0.80 | 0.81 |
| | 95°F (35.0°C) | TC | 7511 | 7522 | 7530 | 7530 | 7540 | 7964 | 7974 | 7981 | 7983 | 7993 | 8440 | 8451 | 8460 | 8462 | 8471 | 8948 | 8958 | 8968 | 8969 | 8981 |
| | | S/T | 0.46 | 0.54 | 0.61 | 0.61 | 0.69 | 0.48 | 0.57 | 0.64 | 0.64 | 0.74 | 0.51 | 0.60 | 0.68 | 0.68 | 0.78 | 0.54 | 0.64 | 0.72 | 0.72 | 0.83 |
| | | PI | 0.84 | 0.84 | 0.84 | 0.84 | 0.84 | 0.89 | 0.89 | 0.89 | 0.89 | 0.89 | 0.94 | 0.94 | 0.94 | 0.94 | 0.95 | 1.00 | 1.00 | 1.00 | 1.00 | 1.00 |
| | 104°F (40.0°C) | TC | 6777 | 6786 | 6793 | 6794 | 6803 | 7185 | 7194 | 7201 | 7202 | 7211 | 7615 | 7625 | 7633 | 7635 | 7643 | 8074 | 8082 | 8091 | 8092 | 8102 |
| | | S/T | 0.47 | 0.55 | 0.62 | 0.62 | 0.71 | 0.50 | 0.58 | 0.66 | 0.66 | 0.75 | 0.53 | 0.62 | 0.70 | 0.70 | 0.80 | 0.56 | 0.65 | 0.74 | 0.74 | 0.85 |
| | | PI | 0.86 | 0.86 | 0.86 | 0.86 | 0.86 | 0.91 | 0.91 | 0.91 | 0.91 | 0.91 | 0.96 | 0.96 | 0.97 | 0.97 | 0.97 | 1.02 | 1.02 | 1.02 | 1.02 | 1.02 |
| | 110°F (43.0°C) | TC | 6336 | 6345 | 6352 | 6352 | 6361 | 6718 | 6726 | 6733 | 6734 | 6742 | 7120 | 7129 | 7137 | 7138 | 7146 | 7549 | 7557 | 7565 | 7566 | 7576 |
| | | S/T | 0.48 | 0.57 | 0.65 | 0.65 | 0.74 | 0.51 | 0.60 | 0.69 | 0.69 | 0.78 | 0.54 | 0.64 | 0.73 | 0.73 | 0.83 | 0.58 | 0.68 | 0.77 | 0.77 | 0.88 |
| | | PI | 0.87 | 0.87 | 0.87 | 0.87 | 0.87 | 0.92 | 0.92 | 0.92 | 0.92 | 0.92 | 0.98 | 0.98 | 0.98 | 0.98 | 0.98 | 1.03 | 1.04 | 1.04 | 1.04 | 1.04 |
| | 115°F (46.0°C) | TC | 5080 | 5086 | 5092 | 5092 | 5099 | 5386 | 5392 | 5397 | 5398 | 5405 | 5707 | 5715 | 5721 | 5722 | 5729 | 6051 | 6058 | 6064 | 6065 | 6073 |
| | | S/T | 0.49 | 0.58 | 0.65 | 0.65 | 0.75 | 0.52 | 0.61 | 0.69 | 0.69 | 0.79 | 0.55 | 0.65 | 0.73 | 0.73 | 0.84 | 0.58 | 0.69 | 0.78 | 0.78 | 0.89 |
| | | PI | 0.72 | 0.73 | 0.73 | 0.73 | 0.73 | 0.77 | 0.77 | 0.77 | 0.77 | 0.77 | 0.81 | 0.82 | 0.82 | 0.82 | 0.82 | 0.86 | 0.86 | 0.87 | 0.87 | 0.87 |
| | 122°F (50.0°C) | TC | 3404 | 3408 | 3412 | 3412 | 3417 | 3609 | 3613 | 3617 | 3617 | 3622 | 3824 | 3829 | 3834 | 3834 | 3839 | 4055 | 4059 | 4064 | 4064 | 4069 |
| | | S/T | 0.50 | 0.59 | 0.67 | 0.67 | 0.76 | 0.53 | 0.62 | 0.71 | 0.71 | 0.81 | 0.56 | 0.66 | 0.75 | 0.75 | 0.86 | 0.60 | 0.70 | 0.80 | 0.80 | 0.91 |
| | | PI | 0.53 | 0.53 | 0.53 | 0.53 | 0.53 | 0.56 | 0.57 | 0.57 | 0.57 | 0.57 | 0.60 | 0.60 | 0.60 | 0.60 | 0.60 | 0.63 | 0.64 | 0.64 | 0.64 | 0.64 |

Manufacturer reserves the right to change, at any time, specifications and designs without notice and without obligations.

# COOLING PERFORMANCE DATA (HEAT PUMP) (CONTINUED)

| AIRFLOW (CFM) | OUTDOOR DB °F (°C) | ID WB °F (°C) | 60.8°F(16.0°C) | | | | | 64.4°F(18.0°C) | | | | | 67°F(19.4°C) | | | | | 71.6°F(22.0°C) | | | | |
|---|---|---|---|---|---|---|---|---|---|---|---|---|---|---|---|---|---|---|---|---|---|---|
| | | ID DB °F (°C) | 73.4°F (23.0°C) | 77.0°F (25.0°C) | 80.0°F (26.7°C) | 80.6°F (27.0°C) | 84.2°F (29.0°C) | 73.4°F (23.0°C) | 77.0°F (25.0°C) | 80.0°F (26.7°C) | 80.6°F (27.0°C) | 84.2°F (29.0°C) | 73.4°F (23.0°C) | 77.0°F (25.0°C) | 80.0°F (26.7°C) | 80.6°F (27.0°C) | 84.2°F (29.0°C) | 73.4°F (23.0°C) | 77.0°F (25.0°C) | 80.0°F (26.7°C) | 80.6°F (27.0°C) | 84.2°F (29.0°C) |
| 206 | 5°F (-15.0°C) | TC | 8042 | 8053 | 8062 | 8062 | 8073 | 8527 | 8537 | 8545 | 8547 | 8557 | 9036 | 9048 | 9058 | 9060 | 9070 | 9581 | 9591 | 9602 | 9603 | 9615 |
| | | S/T | 0.45 | 0.53 | 0.60 | 0.60 | 0.68 | 0.48 | 0.56 | 0.63 | 0.63 | 0.72 | 0.50 | 0.59 | 0.67 | 0.67 | 0.77 | 0.53 | 0.63 | 0.71 | 0.71 | 0.81 |
| | | PI | 0.41 | 0.41 | 0.41 | 0.41 | 0.41 | 0.43 | 0.43 | 0.43 | 0.43 | 0.43 | 0.46 | 0.46 | 0.46 | 0.46 | 0.46 | 0.48 | 0.49 | 0.49 | 0.49 | 0.49 |
| | 14°F (-10.0°C) | TC | 8880 | 8892 | 8902 | 8902 | 8914 | 9415 | 9426 | 9436 | 9438 | 9449 | 9978 | 9991 | 10002 | 10004 | 10015 | 10579 | 10590 | 10602 | 10604 | 10617 |
| | | S/T | 0.45 | 0.53 | 0.60 | 0.60 | 0.68 | 0.48 | 0.56 | 0.64 | 0.64 | 0.72 | 0.51 | 0.59 | 0.67 | 0.67 | 0.77 | 0.54 | 0.63 | 0.71 | 0.71 | 0.81 |
| | | PI | 0.39 | 0.39 | 0.40 | 0.40 | 0.40 | 0.42 | 0.42 | 0.42 | 0.42 | 0.42 | 0.44 | 0.44 | 0.44 | 0.44 | 0.44 | 0.47 | 0.47 | 0.47 | 0.47 | 0.47 |
| | 17°F (-8.3°C) | TC | 9159 | 9172 | 9182 | 9182 | 9194 | 9711 | 9723 | 9732 | 9734 | 9746 | 10292 | 10305 | 10316 | 10318 | 10330 | 10912 | 10924 | 10935 | 10937 | 10951 |
| | | S/T | 0.45 | 0.53 | 0.60 | 0.60 | 0.69 | 0.48 | 0.56 | 0.64 | 0.64 | 0.73 | 0.51 | 0.59 | 0.68 | 0.68 | 0.77 | 0.54 | 0.63 | 0.72 | 0.72 | 0.82 |
| | | PI | 0.39 | 0.39 | 0.39 | 0.39 | 0.39 | 0.41 | 0.41 | 0.41 | 0.41 | 0.41 | 0.44 | 0.44 | 0.44 | 0.44 | 0.44 | 0.46 | 0.46 | 0.47 | 0.47 | 0.47 |
| | 23°F (-5.0°C) | TC | 9043 | 9055 | 9065 | 9065 | 9077 | 9588 | 9599 | 9609 | 9610 | 9622 | 10160 | 10174 | 10185 | 10187 | 10198 | 10773 | 10784 | 10796 | 10798 | 10811 |
| | | S/T | 0.45 | 0.53 | 0.60 | 0.60 | 0.69 | 0.48 | 0.56 | 0.64 | 0.64 | 0.73 | 0.51 | 0.60 | 0.68 | 0.68 | 0.77 | 0.54 | 0.63 | 0.72 | 0.72 | 0.82 |
| | | PI | 0.44 | 0.44 | 0.44 | 0.44 | 0.44 | 0.47 | 0.47 | 0.47 | 0.47 | 0.47 | 0.50 | 0.50 | 0.50 | 0.50 | 0.50 | 0.53 | 0.53 | 0.53 | 0.53 | 0.53 |
| | 35°F (1.7°C) | TC | 8809 | 8821 | 8831 | 8831 | 8843 | 9340 | 9351 | 9361 | 9362 | 9374 | 9898 | 9911 | 9922 | 9924 | 9935 | 10495 | 10506 | 10518 | 10519 | 10532 |
| | | S/T | 0.46 | 0.53 | 0.61 | 0.61 | 0.69 | 0.48 | 0.57 | 0.64 | 0.64 | 0.73 | 0.51 | 0.60 | 0.68 | 0.68 | 0.78 | 0.54 | 0.64 | 0.72 | 0.72 | 0.83 |
| | | PI | 0.55 | 0.55 | 0.55 | 0.55 | 0.55 | 0.58 | 0.58 | 0.58 | 0.58 | 0.58 | 0.61 | 0.61 | 0.62 | 0.62 | 0.62 | 0.65 | 0.65 | 0.65 | 0.65 | 0.65 |
| | 41°F (5.0°C) | TC | 8830 | 8842 | 8852 | 8852 | 8864 | 9363 | 9374 | 9383 | 9385 | 9396 | 9922 | 9935 | 9946 | 9948 | 9959 | 10520 | 10531 | 10543 | 10544 | 10557 |
| | | S/T | 0.46 | 0.54 | 0.61 | 0.61 | 0.69 | 0.48 | 0.57 | 0.65 | 0.65 | 0.74 | 0.51 | 0.60 | 0.68 | 0.68 | 0.78 | 0.54 | 0.64 | 0.73 | 0.73 | 0.83 |
| | | PI | 0.49 | 0.49 | 0.49 | 0.49 | 0.49 | 0.52 | 0.52 | 0.52 | 0.52 | 0.52 | 0.55 | 0.55 | 0.55 | 0.55 | 0.55 | 0.58 | 0.58 | 0.58 | 0.58 | 0.58 |
| | 47°F (8.3°C) | TC | 8851 | 8863 | 8873 | 8873 | 8885 | 9385 | 9396 | 9405 | 9407 | 9418 | 9945 | 9958 | 9970 | 9971 | 9982 | 10545 | 10556 | 10568 | 10569 | 10582 |
| | | S/T | 0.46 | 0.54 | 0.61 | 0.61 | 0.70 | 0.49 | 0.57 | 0.65 | 0.65 | 0.74 | 0.51 | 0.60 | 0.69 | 0.69 | 0.78 | 0.55 | 0.64 | 0.73 | 0.73 | 0.83 |
| | | PI | 0.43 | 0.43 | 0.43 | 0.43 | 0.43 | 0.45 | 0.45 | 0.45 | 0.45 | 0.45 | 0.48 | 0.48 | 0.48 | 0.48 | 0.48 | 0.51 | 0.51 | 0.51 | 0.51 | 0.51 |
| | 50°F (10.0°C) | TC | 8883 | 8895 | 8905 | 8905 | 8917 | 9418 | 9430 | 9439 | 9441 | 9452 | 9981 | 9994 | 10005 | 10007 | 10018 | 10583 | 10594 | 10606 | 10607 | 10620 |
| | | S/T | 0.46 | 0.54 | 0.61 | 0.61 | 0.70 | 0.49 | 0.57 | 0.65 | 0.65 | 0.74 | 0.52 | 0.61 | 0.69 | 0.69 | 0.79 | 0.55 | 0.64 | 0.73 | 0.73 | 0.83 |
| | | PI | 0.44 | 0.44 | 0.45 | 0.45 | 0.45 | 0.47 | 0.47 | 0.47 | 0.47 | 0.47 | 0.50 | 0.50 | 0.50 | 0.50 | 0.50 | 0.53 | 0.53 | 0.53 | 0.53 | 0.53 |
| | 59°F (15.0°C) | TC | 8978 | 8991 | 9000 | 9001 | 9013 | 9520 | 9531 | 9540 | 9542 | 9553 | 10088 | 10101 | 10113 | 10114 | 10126 | 10696 | 10708 | 10719 | 10721 | 10734 |
| | | S/T | 0.46 | 0.54 | 0.62 | 0.62 | 0.70 | 0.49 | 0.58 | 0.65 | 0.65 | 0.75 | 0.52 | 0.61 | 0.69 | 0.69 | 0.79 | 0.55 | 0.65 | 0.73 | 0.73 | 0.84 |
| | | PI | 0.49 | 0.49 | 0.50 | 0.50 | 0.50 | 0.52 | 0.52 | 0.53 | 0.53 | 0.53 | 0.56 | 0.56 | 0.56 | 0.56 | 0.56 | 0.59 | 0.59 | 0.59 | 0.59 | 0.59 |
| | 68°F (20.0°C) | TC | 9074 | 9086 | 9096 | 9096 | 9108 | 9621 | 9632 | 9641 | 9643 | 9655 | 10195 | 10209 | 10220 | 10222 | 10233 | 10810 | 10821 | 10833 | 10835 | 10848 |
| | | S/T | 0.48 | 0.56 | 0.63 | 0.63 | 0.72 | 0.50 | 0.59 | 0.67 | 0.67 | 0.77 | 0.53 | 0.63 | 0.71 | 0.71 | 0.81 | 0.57 | 0.66 | 0.75 | 0.75 | 0.86 |
| | | PI | 0.54 | 0.55 | 0.55 | 0.55 | 0.55 | 0.58 | 0.58 | 0.58 | 0.58 | 0.58 | 0.61 | 0.61 | 0.61 | 0.61 | 0.61 | 0.65 | 0.65 | 0.65 | 0.65 | 0.65 |
| | 77°F (25.0°C) | TC | 9169 | 9181 | 9191 | 9192 | 9204 | 9722 | 9733 | 9743 | 9745 | 9756 | 10302 | 10316 | 10327 | 10329 | 10341 | 10923 | 10935 | 10947 | 10949 | 10962 |
| | | S/T | 0.48 | 0.56 | 0.64 | 0.64 | 0.73 | 0.51 | 0.60 | 0.68 | 0.68 | 0.78 | 0.54 | 0.63 | 0.72 | 0.72 | 0.82 | 0.57 | 0.67 | 0.76 | 0.76 | 0.87 |
| | | PI | 0.59 | 0.60 | 0.60 | 0.60 | 0.60 | 0.63 | 0.63 | 0.63 | 0.63 | 0.63 | 0.67 | 0.67 | 0.67 | 0.67 | 0.67 | 0.71 | 0.71 | 0.71 | 0.71 | 0.71 |
| | 82°F (27.8°C) | TC | 9062 | 9074 | 9084 | 9084 | 9096 | 9608 | 9619 | 9629 | 9631 | 9642 | 10182 | 10195 | 10206 | 10208 | 10220 | 10795 | 10807 | 10819 | 10821 | 10834 |
| | | S/T | 0.49 | 0.57 | 0.65 | 0.65 | 0.74 | 0.52 | 0.61 | 0.69 | 0.69 | 0.79 | 0.55 | 0.64 | 0.73 | 0.73 | 0.83 | 0.58 | 0.68 | 0.77 | 0.77 | 0.88 |
| | | PI | 0.65 | 0.65 | 0.65 | 0.65 | 0.65 | 0.69 | 0.69 | 0.69 | 0.69 | 0.69 | 0.73 | 0.73 | 0.73 | 0.73 | 0.73 | 0.77 | 0.77 | 0.78 | 0.78 | 0.78 |
| | 86°F (30.0°C) | TC | 8774 | 8786 | 8795 | 8796 | 8807 | 9303 | 9314 | 9323 | 9325 | 9336 | 9858 | 9871 | 9882 | 9884 | 9895 | 10452 | 10464 | 10475 | 10477 | 10490 |
| | | S/T | 0.49 | 0.58 | 0.66 | 0.66 | 0.75 | 0.52 | 0.61 | 0.70 | 0.70 | 0.80 | 0.55 | 0.65 | 0.74 | 0.74 | 0.84 | 0.59 | 0.69 | 0.78 | 0.78 | 0.89 |
| | | PI | 0.73 | 0.73 | 0.73 | 0.73 | 0.73 | 0.77 | 0.77 | 0.77 | 0.77 | 0.78 | 0.82 | 0.82 | 0.82 | 0.82 | 0.82 | 0.87 | 0.87 | 0.87 | 0.87 | 0.87 |

Manufacturer reserves the right to change, at any time, specifications and designs without notice and without obligations.

# COOLING PERFORMANCE DATA (HEAT PUMP) (CONTINUED)

| AIRFLOW (CFM) | OUTDOOR DB °F (°C) | ID WB °F (°C) | 60.8°F(16.0°C) | | | | | 64.4°F(18.0°C) | | | | | 67°F(19.4°C) | | | | | 71.6°F(22.0°C) | | | | |
|---|---|---|---|---|---|---|---|---|---|---|---|---|---|---|---|---|---|---|---|---|---|---|
| | | ID DB °F (°C) | 73.4°F (23.0°C) | 77.0°F (25.0°C) | 80.0°F (26.7°C) | 80.6°F (27.0°C) | 84.2°F (29.0°C) | 73.4°F (23.0°C) | 77.0°F (25.0°C) | 80.0°F (26.7°C) | 80.6°F (27.0°C) | 84.2°F (29.0°C) | 73.4°F (23.0°C) | 77.0°F (25.0°C) | 80.0°F (26.7°C) | 80.6°F (27.0°C) | 84.2°F (29.0°C) | 73.4°F (23.0°C) | 77.0°F (25.0°C) | 80.0°F (26.7°C) | 80.6°F (27.0°C) | 84.2°F (29.0°C) |
| 206 | 95°F (35.0°C) | TC | 8126 | 8137 | 8146 | 8146 | 8157 | 8616 | 8626 | 8635 | 8636 | 8647 | 9131 | 9142 | 9153 | 9154 | 9165 | 9681 | 9691 | 9702 | 9703 | 9715 |
| | | S/T | 0.49 | 0.58 | 0.66 | 0.66 | 0.75 | 0.52 | 0.61 | 0.70 | 0.70 | 0.80 | 0.55 | 0.65 | 0.74 | 0.74 | 0.84 | 0.59 | 0.69 | 0.78 | 0.78 | 0.89 |
| | | PI | 0.91 | 0.91 | 0.91 | 0.91 | 0.91 | 0.96 | 0.96 | 0.96 | 0.96 | 0.96 | 1.02 | 1.02 | 1.02 | 1.02 | 1.02 | 1.08 | 1.08 | 1.08 | 1.08 | 1.08 |
| | 104°F (40.0°C) | TC | 7332 | 7341 | 7349 | 7350 | 7360 | 7773 | 7783 | 7790 | 7792 | 7801 | 8238 | 8249 | 8258 | 8259 | 8268 | 8734 | 8744 | 8753 | 8755 | 8765 |
| | | S/T | 0.51 | 0.59 | 0.67 | 0.67 | 0.77 | 0.54 | 0.63 | 0.72 | 0.72 | 0.82 | 0.57 | 0.67 | 0.76 | 0.76 | 0.86 | 0.60 | 0.71 | 0.80 | 0.80 | 0.92 |
| | | PI | 0.93 | 0.93 | 0.93 | 0.93 | 0.93 | 0.98 | 0.98 | 0.99 | 0.99 | 0.99 | 1.04 | 1.04 | 1.04 | 1.04 | 1.05 | 1.10 | 1.11 | 1.11 | 1.11 | 1.11 |
| | 110°F (43.0°C) | TC | 6855 | 6864 | 6871 | 6872 | 6881 | 7268 | 7277 | 7284 | 7285 | 7294 | 7702 | 7712 | 7721 | 7722 | 7731 | 8166 | 8175 | 8184 | 8185 | 8195 |
| | | S/T | 0.52 | 0.62 | 0.70 | 0.70 | 0.80 | 0.56 | 0.65 | 0.74 | 0.74 | 0.85 | 0.59 | 0.69 | 0.79 | 0.79 | 0.90 | 0.62 | 0.73 | 0.83 | 0.83 | 0.95 |
| | | PI | 0.94 | 0.94 | 0.94 | 0.94 | 0.94 | 1.00 | 1.00 | 1.00 | 1.00 | 1.00 | 1.06 | 1.06 | 1.06 | 1.06 | 1.06 | 1.12 | 1.12 | 1.12 | 1.12 | 1.12 |
| | 115°F (46.0°C) | TC | 5495 | 5503 | 5508 | 5509 | 5516 | 5826 | 5833 | 5839 | 5840 | 5847 | 6174 | 6182 | 6189 | 6190 | 6197 | 6546 | 6554 | 6561 | 6562 | 6570 |
| | | S/T | 0.53 | 0.62 | 0.71 | 0.71 | 0.81 | 0.56 | 0.66 | 0.75 | 0.75 | 0.85 | 0.60 | 0.70 | 0.79 | 0.80 | 0.91 | 0.63 | 0.74 | 0.84 | 0.84 | 0.96 |
| | | PI | 0.78 | 0.78 | 0.79 | 0.79 | 0.79 | 0.83 | 0.83 | 0.83 | 0.83 | 0.83 | 0.88 | 0.88 | 0.88 | 0.88 | 0.88 | 0.93 | 0.93 | 0.94 | 0.94 | 0.94 |
| | 122°F (50.0°C) | TC | 3682 | 3687 | 3691 | 3691 | 3696 | 3904 | 3909 | 3913 | 3913 | 3918 | 4137 | 4143 | 4147 | 4148 | 4153 | 4387 | 4391 | 4396 | 4397 | 4402 |
| | | S/T | 0.54 | 0.64 | 0.72 | 0.72 | 0.83 | 0.58 | 0.68 | 0.77 | 0.77 | 0.87 | 0.61 | 0.72 | 0.81 | 0.81 | 0.93 | 0.65 | 0.76 | 0.86 | 0.86 | 0.98 |
| | | PI | 0.58 | 0.58 | 0.58 | 0.58 | 0.58 | 0.61 | 0.61 | 0.61 | 0.61 | 0.61 | 0.65 | 0.65 | 0.65 | 0.65 | 0.65 | 0.69 | 0.69 | 0.69 | 0.69 | 0.69 |
| 229 | 5°F (-15.0°C) | TC | 8700 | 8712 | 8721 | 8722 | 8733 | 9225 | 9235 | 9245 | 9246 | 9257 | 9776 | 9788 | 9799 | 9801 | 9812 | 10365 | 10376 | 10387 | 10389 | 10402 |
| | | S/T | 0.49 | 0.57 | 0.65 | 0.65 | 0.74 | 0.51 | 0.60 | 0.69 | 0.69 | 0.78 | 0.55 | 0.64 | 0.73 | 0.73 | 0.83 | 0.58 | 0.68 | 0.77 | 0.77 | 0.88 |
| | | PI | 0.44 | 0.44 | 0.44 | 0.44 | 0.44 | 0.47 | 0.47 | 0.47 | 0.47 | 0.47 | 0.49 | 0.50 | 0.50 | 0.50 | 0.50 | 0.52 | 0.53 | 0.53 | 0.53 | 0.53 |
| | 14°F (-10.0°C) | TC | 9607 | 9620 | 9630 | 9630 | 9643 | 10186 | 10198 | 10208 | 10210 | 10222 | 10794 | 10808 | 10820 | 10822 | 10834 | 11445 | 11457 | 11470 | 11471 | 11486 |
| | | S/T | 0.49 | 0.57 | 0.65 | 0.65 | 0.74 | 0.52 | 0.61 | 0.69 | 0.69 | 0.78 | 0.55 | 0.64 | 0.73 | 0.73 | 0.83 | 0.58 | 0.68 | 0.77 | 0.77 | 0.88 |
| | | PI | 0.43 | 0.43 | 0.43 | 0.43 | 0.43 | 0.45 | 0.45 | 0.45 | 0.45 | 0.45 | 0.48 | 0.48 | 0.48 | 0.48 | 0.48 | 0.51 | 0.51 | 0.51 | 0.51 | 0.51 |
| | 17°F (-8.3°C) | TC | 9909 | 9922 | 9933 | 9933 | 9947 | 10506 | 10519 | 10529 | 10531 | 10543 | 11134 | 11148 | 11161 | 11163 | 11175 | 11805 | 11817 | 11830 | 11832 | 11847 |
| | | S/T | 0.49 | 0.57 | 0.65 | 0.65 | 0.74 | 0.52 | 0.61 | 0.69 | 0.69 | 0.79 | 0.55 | 0.64 | 0.73 | 0.73 | 0.83 | 0.58 | 0.68 | 0.78 | 0.78 | 0.88 |
| | | PI | 0.42 | 0.42 | 0.42 | 0.42 | 0.42 | 0.45 | 0.45 | 0.45 | 0.45 | 0.45 | 0.47 | 0.47 | 0.48 | 0.48 | 0.48 | 0.50 | 0.50 | 0.50 | 0.50 | 0.50 |
| | 23°F (-5.0°C) | TC | 9783 | 9796 | 9806 | 9807 | 9820 | 10372 | 10385 | 10395 | 10397 | 10409 | 10992 | 11006 | 11018 | 11021 | 11033 | 11654 | 11667 | 11680 | 11681 | 11696 |
| | | S/T | 0.49 | 0.58 | 0.65 | 0.65 | 0.75 | 0.52 | 0.61 | 0.69 | 0.69 | 0.79 | 0.55 | 0.65 | 0.74 | 0.74 | 0.84 | 0.58 | 0.69 | 0.78 | 0.78 | 0.89 |
| | | PI | 0.48 | 0.48 | 0.48 | 0.48 | 0.48 | 0.51 | 0.51 | 0.51 | 0.51 | 0.51 | 0.54 | 0.54 | 0.54 | 0.54 | 0.54 | 0.57 | 0.57 | 0.57 | 0.57 | 0.57 |
| | 35°F (1.7°C) | TC | 9530 | 9543 | 9553 | 9554 | 9567 | 10105 | 10117 | 10127 | 10129 | 10141 | 10708 | 10722 | 10734 | 10736 | 10748 | 11353 | 11366 | 11378 | 11380 | 11394 |
| | | S/T | 0.49 | 0.58 | 0.66 | 0.66 | 0.75 | 0.52 | 0.61 | 0.70 | 0.70 | 0.79 | 0.55 | 0.65 | 0.74 | 0.74 | 0.84 | 0.59 | 0.69 | 0.78 | 0.78 | 0.89 |
| | | PI | 0.59 | 0.59 | 0.59 | 0.59 | 0.59 | 0.63 | 0.63 | 0.63 | 0.63 | 0.63 | 0.66 | 0.67 | 0.67 | 0.67 | 0.67 | 0.70 | 0.71 | 0.71 | 0.71 | 0.71 |
| | 41°F (5.0°C) | TC | 9553 | 9566 | 9576 | 9577 | 9589 | 10129 | 10141 | 10151 | 10153 | 10165 | 10734 | 10748 | 10760 | 10762 | 10774 | 11381 | 11393 | 11405 | 11407 | 11421 |
| | | S/T | 0.49 | 0.58 | 0.66 | 0.66 | 0.75 | 0.52 | 0.61 | 0.70 | 0.70 | 0.80 | 0.56 | 0.65 | 0.74 | 0.74 | 0.84 | 0.59 | 0.69 | 0.78 | 0.78 | 0.89 |
| | | PI | 0.53 | 0.53 | 0.53 | 0.53 | 0.53 | 0.56 | 0.56 | 0.56 | 0.56 | 0.56 | 0.59 | 0.59 | 0.59 | 0.59 | 0.59 | 0.63 | 0.63 | 0.63 | 0.63 | 0.63 |
| | 47°F (8.3°C) | TC | 9576 | 9589 | 9599 | 9599 | 9612 | 10153 | 10165 | 10175 | 10177 | 10189 | 10759 | 10773 | 10785 | 10787 | 10799 | 11408 | 11420 | 11432 | 11434 | 11448 |
| | | S/T | 0.50 | 0.58 | 0.66 | 0.66 | 0.75 | 0.53 | 0.62 | 0.70 | 0.70 | 0.80 | 0.56 | 0.65 | 0.74 | 0.74 | 0.85 | 0.59 | 0.69 | 0.79 | 0.79 | 0.90 |
| | | PI | 0.46 | 0.46 | 0.46 | 0.46 | 0.46 | 0.49 | 0.49 | 0.49 | 0.49 | 0.49 | 0.52 | 0.52 | 0.52 | 0.52 | 0.52 | 0.55 | 0.55 | 0.55 | 0.55 | 0.55 |
| | 50°F (10.0°C) | TC | 9610 | 9623 | 9633 | 9634 | 9647 | 10189 | 10201 | 10211 | 10213 | 10225 | 10798 | 10812 | 10824 | 10826 | 10838 | 11449 | 11461 | 11473 | 11475 | 11490 |
| | | S/T | 0.50 | 0.58 | 0.66 | 0.66 | 0.76 | 0.53 | 0.62 | 0.70 | 0.70 | 0.80 | 0.56 | 0.66 | 0.75 | 0.75 | 0.85 | 0.59 | 0.70 | 0.79 | 0.79 | 0.90 |
| | | PI | 0.48 | 0.48 | 0.48 | 0.48 | 0.48 | 0.51 | 0.51 | 0.51 | 0.51 | 0.51 | 0.54 | 0.54 | 0.54 | 0.54 | 0.54 | 0.57 | 0.57 | 0.57 | 0.57 | 0.57 |

Manufacturer reserves the right to change, at any time, specifications and designs without notice and without obligations.

# COOLING PERFORMANCE DATA (HEAT PUMP) (CONTINUED)

| AIRFLOW (CFM) | OUTDOOR DB °F (°C) | ID WB °F (°C) | 60.8°F(16.0°C) | | | | | 64.4°F(18.0°C) | | | | | 67°F(19.4°C) | | | | | 71.6°F(22.0°C) | | | | |
|---|---|---|---|---|---|---|---|---|---|---|---|---|---|---|---|---|---|---|---|---|---|---|
| | | ID DB °F (°C) | 73.4°F (23.0°C) | 77.0°F (25.0°C) | 80.0°F (26.7°C) | 80.6°F (27.0°C) | 84.2°F (29.0°C) | 73.4°F (23.0°C) | 77.0°F (25.0°C) | 80.0°F (26.7°C) | 80.6°F (27.0°C) | 84.2°F (29.0°C) | 73.4°F (23.0°C) | 77.0°F (25.0°C) | 80.0°F (26.7°C) | 80.6°F (27.0°C) | 84.2°F (29.0°C) | 73.4°F (23.0°C) | 77.0°F (25.0°C) | 80.0°F (26.7°C) | 80.6°F (27.0°C) | 84.2°F (29.0°C) |
| 229 | 59°F (15.0°C) | TC | 9713 | 9726 | 9737 | 9737 | 9750 | 10299 | 10311 | 10321 | 10323 | 10335 | 10914 | 10928 | 10940 | 10942 | 10954 | 11571 | 11584 | 11597 | 11598 | 11613 |
| | | S/T | 0.50 | 0.59 | 0.67 | 0.67 | 0.76 | 0.53 | 0.62 | 0.71 | 0.71 | 0.81 | 0.56 | 0.66 | 0.75 | 0.75 | 0.86 | 0.60 | 0.70 | 0.80 | 0.80 | 0.91 |
| | | PI | 0.53 | 0.54 | 0.54 | 0.54 | 0.54 | 0.57 | 0.57 | 0.57 | 0.57 | 0.57 | 0.60 | 0.60 | 0.60 | 0.60 | 0.60 | 0.64 | 0.64 | 0.64 | 0.64 | 0.64 |
| | 68°F (20.0°C) | TC | 9816 | 9829 | 9840 | 9840 | 9854 | 10408 | 10420 | 10430 | 10432 | 10445 | 11030 | 11044 | 11056 | 11058 | 11071 | 11694 | 11707 | 11720 | 11721 | 11736 |
| | | S/T | 0.51 | 0.60 | 0.69 | 0.69 | 0.78 | 0.54 | 0.64 | 0.73 | 0.73 | 0.83 | 0.58 | 0.68 | 0.77 | 0.77 | 0.88 | 0.61 | 0.72 | 0.82 | 0.82 | 0.93 |
| | | PI | 0.59 | 0.59 | 0.59 | 0.59 | 0.59 | 0.62 | 0.63 | 0.63 | 0.63 | 0.63 | 0.66 | 0.66 | 0.66 | 0.66 | 0.66 | 0.70 | 0.70 | 0.70 | 0.70 | 0.70 |
| | 77°F (25.0°C) | TC | 9919 | 9933 | 9943 | 9944 | 9957 | 10517 | 10530 | 10540 | 10542 | 10555 | 11145 | 11160 | 11172 | 11174 | 11187 | 11817 | 11830 | 11843 | 11845 | 11859 |
| | | S/T | 0.52 | 0.61 | 0.69 | 0.69 | 0.79 | 0.55 | 0.65 | 0.74 | 0.74 | 0.84 | 0.59 | 0.69 | 0.78 | 0.78 | 0.89 | 0.62 | 0.73 | 0.83 | 0.83 | 0.94 |
| | | PI | 0.64 | 0.64 | 0.64 | 0.64 | 0.65 | 0.68 | 0.68 | 0.68 | 0.68 | 0.68 | 0.72 | 0.72 | 0.72 | 0.72 | 0.73 | 0.77 | 0.77 | 0.77 | 0.77 | 0.77 |
| | 82°F (27.8°C) | TC | 9803 | 9816 | 9827 | 9828 | 9841 | 10394 | 10406 | 10417 | 10419 | 10431 | 11015 | 11029 | 11042 | 11044 | 11056 | 11679 | 11691 | 11704 | 11706 | 11721 |
| | | S/T | 0.53 | 0.62 | 0.70 | 0.70 | 0.80 | 0.56 | 0.66 | 0.75 | 0.75 | 0.85 | 0.59 | 0.70 | 0.79 | 0.79 | 0.90 | 0.63 | 0.74 | 0.84 | 0.84 | 0.95 |
| | | PI | 0.70 | 0.70 | 0.70 | 0.70 | 0.71 | 0.75 | 0.75 | 0.75 | 0.75 | 0.75 | 0.79 | 0.79 | 0.79 | 0.79 | 0.79 | 0.84 | 0.84 | 0.84 | 0.84 | 0.84 |
| | 86°F (30.0°C) | TC | 9492 | 9505 | 9515 | 9515 | 9528 | 10064 | 10076 | 10086 | 10088 | 10100 | 10665 | 10679 | 10691 | 10693 | 10705 | 11308 | 11320 | 11332 | 11334 | 11348 |
| | | S/T | 0.53 | 0.63 | 0.71 | 0.71 | 0.81 | 0.57 | 0.66 | 0.75 | 0.75 | 0.86 | 0.60 | 0.70 | 0.80 | 0.80 | 0.91 | 0.64 | 0.75 | 0.85 | 0.85 | 0.97 |
| | | PI | 0.79 | 0.79 | 0.79 | 0.79 | 0.79 | 0.84 | 0.84 | 0.84 | 0.84 | 0.84 | 0.89 | 0.89 | 0.89 | 0.89 | 0.89 | 0.94 | 0.94 | 0.94 | 0.94 | 0.94 |
| | 95°F (35.0°C) | TC | 8791 | 8803 | 8812 | 8813 | 8825 | 9321 | 9332 | 9341 | 9343 | 9354 | 9878 | 9891 | 9902 | 9903 | 9915 | 10473 | 10484 | 10496 | 10497 | 10510 |
| | | S/T | 0.53 | 0.63 | 0.71 | 0.71 | 0.81 | 0.57 | 0.66 | 0.75 | 0.75 | 0.86 | 0.60 | 0.70 | 0.80 | 0.80 | 0.91 | 0.64 | 0.75 | 0.85 | 0.85 | 0.97 |
| | | PI | 0.98 | 0.98 | 0.98 | 0.98 | 0.98 | 1.04 | 1.04 | 1.04 | 1.04 | 1.04 | 1.10 | 1.10 | 1.11 | 1.11 | 1.11 | 1.17 | 1.17 | 1.17 | 1.17 | 1.17 |
| | 104°F (40.0°C) | TC | 7932 | 7942 | 7951 | 7951 | 7962 | 8410 | 8419 | 8428 | 8429 | 8439 | 8912 | 8924 | 8933 | 8935 | 8945 | 9449 | 9459 | 9469 | 9471 | 9483 |
| | | S/T | 0.55 | 0.64 | 0.73 | 0.73 | 0.83 | 0.58 | 0.68 | 0.77 | 0.77 | 0.88 | 0.62 | 0.72 | 0.82 | 0.82 | 0.93 | 0.65 | 0.76 | 0.87 | 0.87 | 0.99 |
| | | PI | 1.00 | 1.00 | 1.01 | 1.01 | 1.01 | 1.06 | 1.06 | 1.07 | 1.07 | 1.07 | 1.13 | 1.13 | 1.13 | 1.13 | 1.13 | 1.20 | 1.20 | 1.20 | 1.20 | 1.20 |
| | 110°F (43.0°C) | TC | 7416 | 7426 | 7434 | 7434 | 7444 | 7863 | 7872 | 7880 | 7881 | 7891 | 8332 | 8343 | 8353 | 8354 | 8363 | 8835 | 8844 | 8854 | 8855 | 8866 |
| | | S/T | 0.57 | 0.67 | 0.76 | 0.76 | 0.86 | 0.60 | 0.71 | 0.80 | 0.80 | 0.91 | 0.64 | 0.75 | 0.85 | 0.85 | 0.97 | 0.68 | 0.79 | 0.90 | 0.90 | 1.00 |
| | | PI | 1.02 | 1.02 | 1.02 | 1.02 | 1.02 | 1.08 | 1.08 | 1.08 | 1.08 | 1.08 | 1.14 | 1.14 | 1.15 | 1.15 | 1.15 | 1.21 | 1.21 | 1.21 | 1.21 | 1.22 |
| | 115°F (46.0°C) | TC | 5945 | 5953 | 5959 | 5960 | 5968 | 6303 | 6311 | 6317 | 6318 | 6326 | 6680 | 6688 | 6696 | 6697 | 6705 | 7082 | 7090 | 7098 | 7099 | 7107 |
| | | S/T | 0.57 | 0.67 | 0.77 | 0.77 | 0.87 | 0.61 | 0.71 | 0.81 | 0.81 | 0.92 | 0.65 | 0.76 | 0.86 | 0.86 | 0.98 | 0.68 | 0.80 | 0.91 | 0.91 | 1.00 |
| | | PI | 0.85 | 0.85 | 0.85 | 0.85 | 0.85 | 0.90 | 0.90 | 0.90 | 0.90 | 0.90 | 0.95 | 0.95 | 0.96 | 0.96 | 0.96 | 1.01 | 1.01 | 1.01 | 1.01 | 1.01 |
| | 122°F (50.0°C) | TC | 3984 | 3989 | 3993 | 3993 | 3999 | 4224 | 4229 | 4233 | 4234 | 4239 | 4476 | 4482 | 4487 | 4488 | 4493 | 4746 | 4751 | 4756 | 4757 | 4763 |
| | | S/T | 0.59 | 0.69 | 0.78 | 0.78 | 0.89 | 0.62 | 0.73 | 0.83 | 0.83 | 0.95 | 0.66 | 0.77 | 0.88 | 0.88 | 1.00 | 0.70 | 0.82 | 0.93 | 0.93 | 1.00 |
| | | PI | 0.62 | 0.62 | 0.62 | 0.62 | 0.63 | 0.66 | 0.66 | 0.66 | 0.66 | 0.66 | 0.70 | 0.70 | 0.70 | 0.70 | 0.70 | 0.74 | 0.74 | 0.74 | 0.74 | 0.75 |

Manufacturer reserves the right to change, at any time, specifications and designs without notice and without obligations.

# COOLING PERFORMANCE DATA (HEAT PUMP) (CONTINUED)

| AIRFLOW (CFM) | OUTDOOR DB °F (°C) | ID WB °F (°C) | 60.8°F(16.0°C) | | | | | 64.4°F(18.0°C) | | | | | 67°F(19.4°C) | | | | | 71.6°F(22.0°C) | | | | |
|---|---|---|---|---|---|---|---|---|---|---|---|---|---|---|---|---|---|---|---|---|---|---|
| | | ID DB °F (°C) | 73.4°F (23.0°C) | 77.0°F (25.0°C) | 80.0°F (26.7°C) | 80.6°F (27.0°C) | 84.2°F (29.0°C) | 73.4°F (23.0°C) | 77.0°F (25.0°C) | 80.0°F (26.7°C) | 80.6°F (27.0°C) | 84.2°F (29.0°C) | 73.4°F (23.0°C) | 77.0°F (25.0°C) | 80.0°F (26.7°C) | 80.6°F (27.0°C) | 84.2°F (29.0°C) | 73.4°F (23.0°C) | 77.0°F (25.0°C) | 80.0°F (26.7°C) | 80.6°F (27.0°C) | 84.2°F (29.0°C) |
| **12k (115V)** | | | | | | | | | | | | | | | | | | | | | | |
| 176 | 5°F (-15.0°C) | TC | 9305 | 9318 | 9328 | 9328 | 9341 | 9866 | 9878 | 9887 | 9889 | 9901 | 10455 | 10469 | 10481 | 10483 | 10494 | 11085 | 11097 | 11109 | 11111 | 11125 |
| | | S/T | 0.45 | 0.52 | 0.59 | 0.59 | 0.68 | 0.47 | 0.55 | 0.63 | 0.63 | 0.72 | 0.50 | 0.59 | 0.67 | 0.67 | 0.76 | 0.53 | 0.62 | 0.71 | 0.71 | 0.81 |
| | | PI | 0.45 | 0.45 | 0.45 | 0.45 | 0.45 | 0.48 | 0.48 | 0.48 | 0.48 | 0.48 | 0.51 | 0.51 | 0.51 | 0.51 | 0.51 | 0.54 | 0.54 | 0.54 | 0.54 | 0.54 |
| | 14°F (-10.0°C) | TC | 10950 | 10965 | 10976 | 10977 | 10992 | 11610 | 11624 | 11635 | 11637 | 11651 | 12303 | 12319 | 12333 | 12335 | 12349 | 13045 | 13059 | 13073 | 13075 | 13091 |
| | | S/T | 0.45 | 0.52 | 0.60 | 0.60 | 0.68 | 0.47 | 0.56 | 0.63 | 0.63 | 0.72 | 0.50 | 0.59 | 0.67 | 0.67 | 0.76 | 0.53 | 0.62 | 0.71 | 0.71 | 0.81 |
| | | PI | 0.44 | 0.44 | 0.44 | 0.44 | 0.44 | 0.47 | 0.47 | 0.47 | 0.47 | 0.47 | 0.49 | 0.50 | 0.50 | 0.50 | 0.50 | 0.52 | 0.53 | 0.53 | 0.53 | 0.53 |
| | 17°F (-8.3°C) | TC | 11498 | 11514 | 11526 | 11526 | 11542 | 12191 | 12205 | 12218 | 12220 | 12234 | 12919 | 12936 | 12951 | 12953 | 12967 | 13698 | 13713 | 13728 | 13730 | 13747 |
| | | S/T | 0.45 | 0.53 | 0.60 | 0.60 | 0.68 | 0.47 | 0.56 | 0.63 | 0.63 | 0.72 | 0.50 | 0.59 | 0.67 | 0.67 | 0.77 | 0.53 | 0.63 | 0.71 | 0.71 | 0.81 |
| | | PI | 0.44 | 0.44 | 0.44 | 0.44 | 0.44 | 0.46 | 0.46 | 0.46 | 0.46 | 0.46 | 0.49 | 0.49 | 0.49 | 0.49 | 0.49 | 0.52 | 0.52 | 0.52 | 0.52 | 0.52 |
| | 23°F (-5.0°C) | TC | 11194 | 11209 | 11221 | 11222 | 11237 | 11869 | 11883 | 11895 | 11897 | 11911 | 12578 | 12594 | 12608 | 12611 | 12625 | 13336 | 13350 | 13365 | 13367 | 13384 |
| | | S/T | 0.45 | 0.53 | 0.60 | 0.60 | 0.68 | 0.48 | 0.56 | 0.64 | 0.64 | 0.73 | 0.51 | 0.59 | 0.67 | 0.67 | 0.77 | 0.54 | 0.63 | 0.71 | 0.71 | 0.82 |
| | | PI | 0.48 | 0.48 | 0.48 | 0.48 | 0.48 | 0.51 | 0.51 | 0.51 | 0.51 | 0.51 | 0.54 | 0.54 | 0.54 | 0.54 | 0.54 | 0.57 | 0.58 | 0.58 | 0.58 | 0.58 |
| | 35°F (1.7°C) | TC | 10586 | 10601 | 10612 | 10613 | 10627 | 11224 | 11238 | 11249 | 11251 | 11264 | 11895 | 11911 | 11924 | 11926 | 11939 | 12612 | 12625 | 12639 | 12641 | 12657 |
| | | S/T | 0.45 | 0.53 | 0.60 | 0.60 | 0.69 | 0.48 | 0.56 | 0.64 | 0.64 | 0.73 | 0.51 | 0.60 | 0.68 | 0.68 | 0.77 | 0.54 | 0.63 | 0.72 | 0.72 | 0.82 |
| | | PI | 0.57 | 0.57 | 0.57 | 0.57 | 0.58 | 0.61 | 0.61 | 0.61 | 0.61 | 0.61 | 0.64 | 0.65 | 0.65 | 0.65 | 0.65 | 0.68 | 0.68 | 0.68 | 0.68 | 0.69 |
| | 41°F (5.0°C) | TC | 10245 | 10258 | 10269 | 10270 | 10284 | 10862 | 10875 | 10886 | 10888 | 10901 | 11511 | 11526 | 11539 | 11541 | 11554 | 12205 | 12218 | 12231 | 12233 | 12248 |
| | | S/T | 0.45 | 0.53 | 0.60 | 0.60 | 0.69 | 0.48 | 0.56 | 0.64 | 0.64 | 0.73 | 0.51 | 0.60 | 0.68 | 0.68 | 0.77 | 0.54 | 0.63 | 0.72 | 0.72 | 0.82 |
| | | PI | 0.47 | 0.47 | 0.47 | 0.47 | 0.47 | 0.50 | 0.50 | 0.50 | 0.50 | 0.50 | 0.53 | 0.53 | 0.53 | 0.53 | 0.53 | 0.56 | 0.56 | 0.56 | 0.56 | 0.57 |
| | 47°F (8.3°C) | TC | 9903 | 9916 | 9927 | 9927 | 9941 | 10500 | 10512 | 10522 | 10524 | 10537 | 11127 | 11141 | 11154 | 11156 | 11168 | 11797 | 11810 | 11823 | 11825 | 11839 |
| | | S/T | 0.45 | 0.53 | 0.61 | 0.61 | 0.69 | 0.48 | 0.57 | 0.64 | 0.64 | 0.73 | 0.51 | 0.60 | 0.68 | 0.68 | 0.78 | 0.54 | 0.64 | 0.72 | 0.72 | 0.82 |
| | | PI | 0.37 | 0.37 | 0.37 | 0.37 | 0.37 | 0.39 | 0.40 | 0.40 | 0.40 | 0.40 | 0.42 | 0.42 | 0.42 | 0.42 | 0.42 | 0.44 | 0.44 | 0.44 | 0.44 | 0.45 |
| | 50°F (10.0°C) | TC | 9887 | 9900 | 9911 | 9912 | 9925 | 10483 | 10495 | 10506 | 10508 | 10520 | 11109 | 11124 | 11136 | 11138 | 11151 | 11779 | 11791 | 11804 | 11806 | 11821 |
| | | S/T | 0.46 | 0.54 | 0.61 | 0.61 | 0.69 | 0.48 | 0.57 | 0.65 | 0.65 | 0.74 | 0.51 | 0.60 | 0.68 | 0.68 | 0.78 | 0.54 | 0.64 | 0.73 | 0.73 | 0.83 |
| | | PI | 0.38 | 0.38 | 0.39 | 0.39 | 0.39 | 0.41 | 0.41 | 0.41 | 0.41 | 0.41 | 0.43 | 0.43 | 0.43 | 0.43 | 0.43 | 0.46 | 0.46 | 0.46 | 0.46 | 0.46 |
| | 59°F (15.0°C) | TC | 9840 | 9853 | 9864 | 9864 | 9878 | 10433 | 10446 | 10456 | 10458 | 10470 | 11057 | 11071 | 11083 | 11085 | 11098 | 11723 | 11735 | 11748 | 11750 | 11765 |
| | | S/T | 0.46 | 0.54 | 0.61 | 0.61 | 0.70 | 0.49 | 0.57 | 0.65 | 0.65 | 0.74 | 0.52 | 0.61 | 0.69 | 0.69 | 0.78 | 0.55 | 0.64 | 0.73 | 0.73 | 0.83 |
| | | PI | 0.42 | 0.42 | 0.42 | 0.42 | 0.42 | 0.45 | 0.45 | 0.45 | 0.45 | 0.45 | 0.47 | 0.47 | 0.47 | 0.47 | 0.47 | 0.50 | 0.50 | 0.50 | 0.50 | 0.50 |
| | 68°F (20.0°C) | TC | 9793 | 9806 | 9817 | 9817 | 9831 | 10383 | 10396 | 10406 | 10408 | 10420 | 11004 | 11018 | 11030 | 11032 | 11045 | 11667 | 11680 | 11692 | 11694 | 11709 |
| | | S/T | 0.47 | 0.55 | 0.63 | 0.63 | 0.72 | 0.50 | 0.59 | 0.67 | 0.67 | 0.76 | 0.53 | 0.62 | 0.71 | 0.71 | 0.81 | 0.56 | 0.66 | 0.75 | 0.75 | 0.85 |
| | | PI | 0.46 | 0.46 | 0.46 | 0.46 | 0.46 | 0.48 | 0.48 | 0.49 | 0.49 | 0.49 | 0.51 | 0.51 | 0.51 | 0.51 | 0.51 | 0.54 | 0.54 | 0.55 | 0.55 | 0.55 |
| | 77°F (25.0°C) | TC | 9746 | 9759 | 9770 | 9770 | 9784 | 10334 | 10346 | 10356 | 10358 | 10371 | 10951 | 10965 | 10978 | 10980 | 10992 | 11611 | 11624 | 11636 | 11638 | 11653 |
| | | S/T | 0.48 | 0.56 | 0.64 | 0.64 | 0.73 | 0.51 | 0.59 | 0.68 | 0.68 | 0.77 | 0.54 | 0.63 | 0.72 | 0.72 | 0.82 | 0.57 | 0.67 | 0.76 | 0.76 | 0.86 |
| | | PI | 0.49 | 0.49 | 0.49 | 0.49 | 0.49 | 0.52 | 0.52 | 0.52 | 0.52 | 0.52 | 0.55 | 0.55 | 0.55 | 0.56 | 0.56 | 0.59 | 0.59 | 0.59 | 0.59 | 0.59 |
| | 82°F (27.8°C) | TC | 9794 | 9807 | 9818 | 9818 | 9832 | 10385 | 10397 | 10407 | 10409 | 10422 | 11005 | 11019 | 11032 | 11034 | 11046 | 11668 | 11681 | 11693 | 11695 | 11710 |
| | | S/T | 0.48 | 0.57 | 0.65 | 0.65 | 0.74 | 0.51 | 0.60 | 0.68 | 0.68 | 0.78 | 0.54 | 0.64 | 0.72 | 0.72 | 0.83 | 0.58 | 0.68 | 0.77 | 0.77 | 0.88 |
| | | PI | 0.58 | 0.58 | 0.58 | 0.58 | 0.58 | 0.61 | 0.61 | 0.61 | 0.61 | 0.62 | 0.65 | 0.65 | 0.65 | 0.65 | 0.65 | 0.69 | 0.69 | 0.69 | 0.69 | 0.69 |
| | 86°F (30.0°C) | TC | 9926 | 9939 | 9950 | 9951 | 9964 | 10524 | 10537 | 10547 | 10549 | 10562 | 11153 | 11167 | 11180 | 11182 | 11194 | 11825 | 11838 | 11851 | 11853 | 11867 |
| | | S/T | 0.49 | 0.57 | 0.65 | 0.65 | 0.74 | 0.52 | 0.61 | 0.69 | 0.69 | 0.79 | 0.55 | 0.65 | 0.73 | 0.73 | 0.84 | 0.58 | 0.68 | 0.78 | 0.78 | 0.89 |
| | | PI | 0.73 | 0.73 | 0.73 | 0.73 | 0.73 | 0.77 | 0.78 | 0.78 | 0.78 | 0.78 | 0.82 | 0.82 | 0.82 | 0.82 | 0.82 | 0.87 | 0.87 | 0.87 | 0.87 | 0.87 |

Manufacturer reserves the right to change, at any time, specifications and designs without notice and without obligations.

# COOLING PERFORMANCE DATA (HEAT PUMP) (CONTINUED)

| AIRFLOW (CFM) | OUTDOOR DB °F (°C) | ID WB °F (°C) | 60.8°F(16.0°C) | | | | | 64.4°F(18.0°C) | | | | | 67°F(19.4°C) | | | | | 71.6°F(22.0°C) | | | | |
|---|---|---|---|---|---|---|---|---|---|---|---|---|---|---|---|---|---|---|---|---|---|---|
| | | ID DB °F (°C) | 73.4°F (23.0°C) | 77.0°F (25.0°C) | 80.0°F (26.7°C) | 80.6°F (27.0°C) | 84.2°F (29.0°C) | 73.4°F (23.0°C) | 77.0°F (25.0°C) | 80.0°F (26.7°C) | 80.6°F (27.0°C) | 84.2°F (29.0°C) | 73.4°F (23.0°C) | 77.0°F (25.0°C) | 80.0°F (26.7°C) | 80.6°F (27.0°C) | 84.2°F (29.0°C) | 73.4°F (23.0°C) | 77.0°F (25.0°C) | 80.0°F (26.7°C) | 80.6°F (27.0°C) | 84.2°F (29.0°C) |
| 176 | 95°F (35.0°C) | TC | 10222 | 10236 | 10247 | 10248 | 10261 | 10838 | 10851 | 10862 | 10864 | 10877 | 11486 | 11501 | 11514 | 11516 | 11529 | 12178 | 12191 | 12205 | 12206 | 12222 |
| | | S/T | 0.49 | 0.57 | 0.65 | 0.65 | 0.74 | 0.52 | 0.61 | 0.69 | 0.69 | 0.79 | 0.55 | 0.65 | 0.73 | 0.73 | 0.84 | 0.58 | 0.68 | 0.78 | 0.78 | 0.89 |
| | | PI | 1.07 | 1.07 | 1.07 | 1.07 | 1.08 | 1.14 | 1.14 | 1.14 | 1.14 | 1.14 | 1.20 | 1.21 | 1.21 | 1.21 | 1.21 | 1.28 | 1.28 | 1.28 | 1.28 | 1.28 |
| | 104°F (40.0°C) | TC | 8805 | 8817 | 8826 | 8827 | 8839 | 9336 | 9347 | 9356 | 9358 | 9369 | 9893 | 9906 | 9917 | 9919 | 9930 | 10489 | 10501 | 10512 | 10514 | 10527 |
| | | S/T | 0.50 | 0.59 | 0.67 | 0.67 | 0.76 | 0.53 | 0.62 | 0.71 | 0.71 | 0.81 | 0.56 | 0.66 | 0.75 | 0.75 | 0.86 | 0.60 | 0.70 | 0.80 | 0.80 | 0.91 |
| | | PI | 0.98 | 0.99 | 0.99 | 0.99 | 0.99 | 1.04 | 1.04 | 1.05 | 1.05 | 1.05 | 1.11 | 1.11 | 1.11 | 1.11 | 1.11 | 1.17 | 1.17 | 1.18 | 1.18 | 1.18 |
| | 110°F (43.0°C) | TC | 7954 | 7965 | 7974 | 7974 | 7985 | 8434 | 8444 | 8452 | 8454 | 8464 | 8938 | 8949 | 8959 | 8961 | 8971 | 9476 | 9487 | 9497 | 9498 | 9510 |
| | | S/T | 0.52 | 0.61 | 0.69 | 0.69 | 0.79 | 0.55 | 0.65 | 0.74 | 0.74 | 0.84 | 0.58 | 0.69 | 0.78 | 0.78 | 0.89 | 0.62 | 0.73 | 0.83 | 0.83 | 0.94 |
| | | PI | 0.93 | 0.93 | 0.93 | 0.93 | 0.94 | 0.99 | 0.99 | 0.99 | 0.99 | 0.99 | 1.05 | 1.05 | 1.05 | 1.05 | 1.05 | 1.11 | 1.11 | 1.11 | 1.11 | 1.11 |
| | 115°F (46.0°C) | TC | 6669 | 6678 | 6685 | 6686 | 6695 | 7071 | 7079 | 7086 | 7088 | 7096 | 7494 | 7503 | 7512 | 7513 | 7521 | 7945 | 7954 | 7962 | 7964 | 7974 |
| | | S/T | 0.53 | 0.62 | 0.70 | 0.70 | 0.80 | 0.56 | 0.66 | 0.74 | 0.74 | 0.85 | 0.59 | 0.69 | 0.79 | 0.79 | 0.90 | 0.63 | 0.74 | 0.84 | 0.84 | 0.95 |
| | | PI | 0.83 | 0.83 | 0.83 | 0.83 | 0.83 | 0.88 | 0.88 | 0.88 | 0.88 | 0.88 | 0.93 | 0.93 | 0.93 | 0.93 | 0.94 | 0.99 | 0.99 | 0.99 | 0.99 | 0.99 |
| | 122°F (50.0°C) | TC | 4956 | 4962 | 4968 | 4968 | 4974 | 5254 | 5260 | 5266 | 5267 | 5273 | 5568 | 5575 | 5582 | 5583 | 5589 | 5904 | 5910 | 5916 | 5917 | 5925 |
| | | S/T | 0.54 | 0.63 | 0.72 | 0.72 | 0.82 | 0.57 | 0.67 | 0.76 | 0.76 | 0.87 | 0.61 | 0.71 | 0.81 | 0.81 | 0.92 | 0.64 | 0.75 | 0.86 | 0.86 | 0.98 |
| | | PI | 0.69 | 0.69 | 0.69 | 0.69 | 0.70 | 0.73 | 0.74 | 0.74 | 0.74 | 0.74 | 0.78 | 0.78 | 0.78 | 0.78 | 0.78 | 0.83 | 0.83 | 0.83 | 0.83 | 0.83 |
| 241 | 5°F (-15.0°C) | TC | 9576 | 9589 | 9599 | 9600 | 9613 | 10153 | 10165 | 10175 | 10177 | 10189 | 10760 | 10774 | 10786 | 10788 | 10800 | 11408 | 11421 | 11433 | 11435 | 11449 |
| | | S/T | 0.46 | 0.54 | 0.61 | 0.61 | 0.70 | 0.49 | 0.57 | 0.65 | 0.65 | 0.74 | 0.52 | 0.60 | 0.69 | 0.69 | 0.78 | 0.55 | 0.64 | 0.73 | 0.73 | 0.83 |
| | | PI | 0.46 | 0.47 | 0.47 | 0.47 | 0.47 | 0.49 | 0.49 | 0.49 | 0.49 | 0.49 | 0.52 | 0.52 | 0.52 | 0.52 | 0.52 | 0.55 | 0.55 | 0.55 | 0.55 | 0.56 |
| | 14°F (-10.0°C) | TC | 11269 | 11284 | 11296 | 11297 | 11312 | 11948 | 11962 | 11974 | 11976 | 11990 | 12662 | 12678 | 12692 | 12695 | 12709 | 13425 | 13439 | 13454 | 13456 | 13473 |
| | | S/T | 0.46 | 0.54 | 0.61 | 0.61 | 0.70 | 0.49 | 0.57 | 0.65 | 0.65 | 0.74 | 0.52 | 0.61 | 0.69 | 0.69 | 0.78 | 0.55 | 0.64 | 0.73 | 0.73 | 0.83 |
| | | PI | 0.45 | 0.45 | 0.45 | 0.45 | 0.45 | 0.48 | 0.48 | 0.48 | 0.48 | 0.48 | 0.51 | 0.51 | 0.51 | 0.51 | 0.51 | 0.54 | 0.54 | 0.54 | 0.54 | 0.54 |
| | 17°F (-8.3°C) | TC | 11833 | 11849 | 11862 | 11862 | 11878 | 12546 | 12561 | 12573 | 12576 | 12591 | 13296 | 13313 | 13328 | 13330 | 13345 | 14097 | 14112 | 14127 | 14130 | 14147 |
| | | S/T | 0.46 | 0.54 | 0.61 | 0.61 | 0.70 | 0.49 | 0.57 | 0.65 | 0.65 | 0.74 | 0.52 | 0.61 | 0.69 | 0.69 | 0.79 | 0.55 | 0.64 | 0.73 | 0.73 | 0.83 |
| | | PI | 0.45 | 0.45 | 0.45 | 0.45 | 0.45 | 0.48 | 0.48 | 0.48 | 0.48 | 0.48 | 0.50 | 0.51 | 0.51 | 0.51 | 0.51 | 0.54 | 0.54 | 0.54 | 0.54 | 0.54 |
| | 23°F (-5.0°C) | TC | 11520 | 11536 | 11548 | 11549 | 11564 | 12215 | 12229 | 12241 | 12243 | 12258 | 12944 | 12961 | 12976 | 12978 | 12992 | 13724 | 13739 | 13754 | 13756 | 13773 |
| | | S/T | 0.46 | 0.54 | 0.62 | 0.62 | 0.70 | 0.49 | 0.58 | 0.65 | 0.65 | 0.75 | 0.52 | 0.61 | 0.69 | 0.69 | 0.79 | 0.55 | 0.65 | 0.74 | 0.74 | 0.84 |
| | | PI | 0.50 | 0.50 | 0.50 | 0.50 | 0.50 | 0.53 | 0.53 | 0.53 | 0.53 | 0.53 | 0.56 | 0.56 | 0.56 | 0.56 | 0.56 | 0.59 | 0.59 | 0.59 | 0.59 | 0.59 |
| | 35°F (1.7°C) | TC | 10895 | 10909 | 10921 | 10922 | 10936 | 11551 | 11565 | 11576 | 11579 | 11593 | 12242 | 12257 | 12271 | 12273 | 12287 | 12979 | 12993 | 13007 | 13009 | 13026 |
| | | S/T | 0.47 | 0.55 | 0.62 | 0.62 | 0.71 | 0.49 | 0.58 | 0.66 | 0.66 | 0.75 | 0.52 | 0.61 | 0.70 | 0.70 | 0.80 | 0.55 | 0.65 | 0.74 | 0.74 | 0.84 |
| | | PI | 0.59 | 0.59 | 0.59 | 0.59 | 0.59 | 0.63 | 0.63 | 0.63 | 0.63 | 0.63 | 0.66 | 0.66 | 0.66 | 0.66 | 0.67 | 0.70 | 0.70 | 0.70 | 0.70 | 0.71 |
| | 41°F (5.0°C) | TC | 10543 | 10557 | 10569 | 10569 | 10583 | 11178 | 11192 | 11203 | 11205 | 11218 | 11846 | 11862 | 11875 | 11877 | 11890 | 12560 | 12574 | 12587 | 12589 | 12605 |
| | | S/T | 0.47 | 0.55 | 0.62 | 0.62 | 0.71 | 0.49 | 0.58 | 0.66 | 0.66 | 0.75 | 0.52 | 0.62 | 0.70 | 0.70 | 0.80 | 0.56 | 0.65 | 0.74 | 0.74 | 0.84 |
| | | PI | 0.49 | 0.49 | 0.49 | 0.49 | 0.49 | 0.52 | 0.52 | 0.52 | 0.52 | 0.52 | 0.55 | 0.55 | 0.55 | 0.55 | 0.55 | 0.58 | 0.58 | 0.58 | 0.58 | 0.58 |
| | 47°F (8.3°C) | TC | 10191 | 10205 | 10216 | 10216 | 10230 | 10805 | 10818 | 10829 | 10831 | 10844 | 11451 | 11466 | 11479 | 11481 | 11494 | 12141 | 12154 | 12167 | 12169 | 12184 |
| | | S/T | 0.47 | 0.55 | 0.62 | 0.62 | 0.71 | 0.50 | 0.58 | 0.66 | 0.66 | 0.75 | 0.53 | 0.62 | 0.70 | 0.70 | 0.80 | 0.56 | 0.65 | 0.74 | 0.74 | 0.85 |
| | | PI | 0.38 | 0.38 | 0.38 | 0.38 | 0.38 | 0.41 | 0.41 | 0.41 | 0.41 | 0.41 | 0.43 | 0.43 | 0.43 | 0.43 | 0.43 | 0.46 | 0.46 | 0.46 | 0.46 | 0.46 |
| | 50°F (10.0°C) | TC | 10175 | 10189 | 10200 | 10200 | 10214 | 10788 | 10801 | 10812 | 10814 | 10827 | 11433 | 11448 | 11460 | 11463 | 11475 | 12122 | 12135 | 12148 | 12150 | 12165 |
| | | S/T | 0.47 | 0.55 | 0.63 | 0.63 | 0.71 | 0.50 | 0.58 | 0.66 | 0.66 | 0.76 | 0.53 | 0.62 | 0.70 | 0.70 | 0.80 | 0.56 | 0.66 | 0.75 | 0.75 | 0.85 |
| | | PI | 0.40 | 0.40 | 0.40 | 0.40 | 0.40 | 0.42 | 0.42 | 0.42 | 0.42 | 0.42 | 0.44 | 0.44 | 0.45 | 0.45 | 0.45 | 0.47 | 0.47 | 0.47 | 0.47 | 0.47 |

Manufacturer reserves the right to change, at any time, specifications and designs without notice and without obligations.

# COOLING PERFORMANCE DATA (HEAT PUMP) (CONTINUED)

| AIRFLOW (CFM) | OUTDOOR DB °F (°C) | ID WB °F (°C) | 60.8°F(16.0°C) | | | | | 64.4°F(18.0°C) | | | | | 67°F(19.4°C) | | | | | 71.6°F(22.0°C) | | | | |
|---|---|---|---|---|---|---|---|---|---|---|---|---|---|---|---|---|---|---|---|---|---|---|
| | | ID DB °F (°C) | 73.4°F (23.0°C) | 77.0°F (25.0°C) | 80.0°F (26.7°C) | 80.6°F (27.0°C) | 84.2°F (29.0°C) | 73.4°F (23.0°C) | 77.0°F (25.0°C) | 80.0°F (26.7°C) | 80.6°F (27.0°C) | 84.2°F (29.0°C) | 73.4°F (23.0°C) | 77.0°F (25.0°C) | 80.0°F (26.7°C) | 80.6°F (27.0°C) | 84.2°F (29.0°C) | 73.4°F (23.0°C) | 77.0°F (25.0°C) | 80.0°F (26.7°C) | 80.6°F (27.0°C) | 84.2°F (29.0°C) |
| 241 | 59°F (15.0°C) | TC | 10127 | 10140 | 10151 | 10152 | 10165 | 10737 | 10750 | 10760 | 10763 | 10775 | 11379 | 11393 | 11406 | 11408 | 11421 | 12064 | 12077 | 12090 | 12092 | 12107 |
| | | S/T | 0.47 | 0.55 | 0.63 | 0.63 | 0.72 | 0.50 | 0.59 | 0.67 | 0.67 | 0.76 | 0.53 | 0.62 | 0.71 | 0.71 | 0.81 | 0.56 | 0.66 | 0.75 | 0.75 | 0.86 |
| | | PI | 0.43 | 0.43 | 0.43 | 0.43 | 0.43 | 0.46 | 0.46 | 0.46 | 0.46 | 0.46 | 0.49 | 0.49 | 0.49 | 0.49 | 0.49 | 0.52 | 0.52 | 0.52 | 0.52 | 0.52 |
| | 68°F (20.0°C) | TC | 10079 | 10092 | 10103 | 10103 | 10117 | 10686 | 10699 | 10709 | 10711 | 10724 | 11324 | 11339 | 11352 | 11354 | 11366 | 12007 | 12020 | 12033 | 12035 | 12050 |
| | | S/T | 0.49 | 0.57 | 0.65 | 0.65 | 0.74 | 0.51 | 0.60 | 0.69 | 0.69 | 0.78 | 0.55 | 0.64 | 0.73 | 0.73 | 0.83 | 0.58 | 0.68 | 0.77 | 0.77 | 0.88 |
| | | PI | 0.47 | 0.47 | 0.47 | 0.47 | 0.47 | 0.50 | 0.50 | 0.50 | 0.50 | 0.50 | 0.53 | 0.53 | 0.53 | 0.53 | 0.53 | 0.56 | 0.56 | 0.56 | 0.56 | 0.56 |
| | 77°F (25.0°C) | TC | 10030 | 10044 | 10055 | 10055 | 10069 | 10635 | 10647 | 10658 | 10660 | 10673 | 11270 | 11285 | 11297 | 11299 | 11312 | 11949 | 11962 | 11975 | 11977 | 11992 |
| | | S/T | 0.49 | 0.58 | 0.66 | 0.66 | 0.75 | 0.52 | 0.61 | 0.69 | 0.69 | 0.79 | 0.55 | 0.65 | 0.74 | 0.74 | 0.84 | 0.59 | 0.69 | 0.78 | 0.78 | 0.89 |
| | | PI | 0.51 | 0.51 | 0.51 | 0.51 | 0.51 | 0.54 | 0.54 | 0.54 | 0.54 | 0.54 | 0.57 | 0.57 | 0.57 | 0.57 | 0.57 | 0.60 | 0.60 | 0.61 | 0.61 | 0.61 |
| | 82°F (27.8°C) | TC | 10080 | 10093 | 10104 | 10104 | 10118 | 10687 | 10700 | 10710 | 10712 | 10725 | 11326 | 11340 | 11353 | 11355 | 11368 | 12008 | 12021 | 12034 | 12036 | 12051 |
| | | S/T | 0.50 | 0.58 | 0.66 | 0.66 | 0.76 | 0.53 | 0.62 | 0.70 | 0.70 | 0.80 | 0.56 | 0.66 | 0.75 | 0.75 | 0.85 | 0.59 | 0.70 | 0.79 | 0.79 | 0.90 |
| | | PI | 0.60 | 0.60 | 0.60 | 0.60 | 0.60 | 0.63 | 0.63 | 0.63 | 0.63 | 0.63 | 0.67 | 0.67 | 0.67 | 0.67 | 0.67 | 0.71 | 0.71 | 0.71 | 0.71 | 0.71 |
| | 86°F (30.0°C) | TC | 10215 | 10229 | 10240 | 10240 | 10254 | 10831 | 10844 | 10854 | 10856 | 10869 | 11478 | 11493 | 11506 | 11508 | 11521 | 12169 | 12183 | 12196 | 12198 | 12213 |
| | | S/T | 0.50 | 0.59 | 0.67 | 0.67 | 0.77 | 0.53 | 0.63 | 0.71 | 0.71 | 0.81 | 0.57 | 0.66 | 0.76 | 0.76 | 0.86 | 0.60 | 0.70 | 0.80 | 0.80 | 0.91 |
| | | PI | 0.75 | 0.75 | 0.75 | 0.75 | 0.75 | 0.80 | 0.80 | 0.80 | 0.80 | 0.80 | 0.84 | 0.85 | 0.85 | 0.85 | 0.85 | 0.90 | 0.90 | 0.90 | 0.90 | 0.90 |
| | 95°F (35.0°C) | TC | 10520 | 10534 | 10546 | 10546 | 10560 | 11154 | 11167 | 11178 | 11181 | 11194 | 11821 | 11836 | 11849 | 11851 | 11864 | 12533 | 12546 | 12560 | 12562 | 12578 |
| | | S/T | 0.50 | 0.59 | 0.67 | 0.67 | 0.77 | 0.53 | 0.63 | 0.71 | 0.71 | 0.81 | 0.57 | 0.66 | 0.76 | 0.76 | 0.86 | 0.60 | 0.70 | 0.80 | 0.80 | 0.91 |
| | | PI | 1.10 | 1.10 | 1.11 | 1.11 | 1.11 | 1.17 | 1.17 | 1.17 | 1.17 | 1.17 | 1.24 | 1.24 | 1.24 | 1.24 | 1.24 | 1.31 | 1.32 | 1.32 | 1.32 | 1.32 |
| | 104°F (40.0°C) | TC | 9061 | 9074 | 9083 | 9084 | 9096 | 9607 | 9619 | 9628 | 9630 | 9642 | 10181 | 10195 | 10206 | 10208 | 10219 | 10795 | 10807 | 10818 | 10820 | 10834 |
| | | S/T | 0.52 | 0.61 | 0.69 | 0.69 | 0.79 | 0.55 | 0.64 | 0.73 | 0.73 | 0.83 | 0.58 | 0.68 | 0.77 | 0.77 | 0.88 | 0.62 | 0.72 | 0.82 | 0.82 | 0.94 |
| | | PI | 1.01 | 1.01 | 1.02 | 1.02 | 1.02 | 1.07 | 1.08 | 1.08 | 1.08 | 1.08 | 1.14 | 1.14 | 1.14 | 1.14 | 1.14 | 1.21 | 1.21 | 1.21 | 1.21 | 1.21 |
| | 110°F (43.0°C) | TC | 8186 | 8197 | 8206 | 8206 | 8217 | 8679 | 8690 | 8698 | 8700 | 8710 | 9198 | 9210 | 9220 | 9222 | 9232 | 9752 | 9763 | 9773 | 9775 | 9787 |
| | | S/T | 0.54 | 0.63 | 0.71 | 0.71 | 0.81 | 0.57 | 0.67 | 0.76 | 0.76 | 0.86 | 0.60 | 0.71 | 0.80 | 0.80 | 0.91 | 0.64 | 0.75 | 0.85 | 0.85 | 0.97 |
| | | PI | 0.96 | 0.96 | 0.96 | 0.96 | 0.96 | 1.02 | 1.02 | 1.02 | 1.02 | 1.02 | 1.08 | 1.08 | 1.08 | 1.08 | 1.08 | 1.14 | 1.14 | 1.14 | 1.15 | 1.15 |
| | 115°F (46.0°C) | TC | 6863 | 6873 | 6880 | 6880 | 6890 | 7277 | 7286 | 7293 | 7294 | 7303 | 7712 | 7722 | 7730 | 7732 | 7741 | 8176 | 8185 | 8194 | 8196 | 8206 |
| | | S/T | 0.54 | 0.64 | 0.72 | 0.72 | 0.82 | 0.57 | 0.67 | 0.77 | 0.77 | 0.87 | 0.61 | 0.71 | 0.81 | 0.81 | 0.93 | 0.65 | 0.76 | 0.86 | 0.86 | 0.98 |
| | | PI | 0.85 | 0.85 | 0.86 | 0.86 | 0.86 | 0.91 | 0.91 | 0.91 | 0.91 | 0.91 | 0.96 | 0.96 | 0.96 | 0.96 | 0.96 | 1.02 | 1.02 | 1.02 | 1.02 | 1.02 |
| | 122°F (50.0°C) | TC | 5100 | 5107 | 5112 | 5112 | 5119 | 5407 | 5414 | 5419 | 5420 | 5426 | 5730 | 5738 | 5744 | 5745 | 5752 | 6076 | 6082 | 6089 | 6090 | 6097 |
| | | S/T | 0.55 | 0.65 | 0.74 | 0.74 | 0.84 | 0.59 | 0.69 | 0.78 | 0.78 | 0.89 | 0.62 | 0.73 | 0.83 | 0.83 | 0.95 | 0.66 | 0.78 | 0.88 | 0.88 | 1.00 |
| | | PI | 0.71 | 0.71 | 0.72 | 0.72 | 0.72 | 0.76 | 0.76 | 0.76 | 0.76 | 0.76 | 0.80 | 0.80 | 0.80 | 0.80 | 0.80 | 0.85 | 0.85 | 0.85 | 0.85 | 0.85 |

Manufacturer reserves the right to change, at any time, specifications and designs without notice and without obligations.

# COOLING PERFORMANCE DATA (HEAT PUMP) (CONTINUED)

| AIRFLOW (CFM) | OUTDOOR DB °F (°C) | ID WB °F (°C) | 60.8°F(16.0°C) | | | | | 64.4°F(18.0°C) | | | | | 67°F(19.4°C) | | | | | 71.6°F(22.0°C) | | | | |
|---|---|---|---|---|---|---|---|---|---|---|---|---|---|---|---|---|---|---|---|---|---|---|
| | | ID DB °F (°C) | 73.4°F (23.0°C) | 77.0°F (25.0°C) | 80.0°F (26.7°C) | 80.6°F (27.0°C) | 84.2°F (29.0°C) | 73.4°F (23.0°C) | 77.0°F (25.0°C) | 80.0°F (26.7°C) | 80.6°F (27.0°C) | 84.2°F (29.0°C) | 73.4°F (23.0°C) | 77.0°F (25.0°C) | 80.0°F (26.7°C) | 80.6°F (27.0°C) | 84.2°F (29.0°C) | 73.4°F (23.0°C) | 77.0°F (25.0°C) | 80.0°F (26.7°C) | 80.6°F (27.0°C) | 84.2°F (29.0°C) |
| 294 | 5°F (-15.0°C) | TC | 9855 | 9868 | 9879 | 9879 | 9893 | 10449 | 10461 | 10472 | 10474 | 10486 | 11073 | 11088 | 11100 | 11102 | 11115 | 11741 | 11753 | 11766 | 11768 | 11783 |
| | | S/T | 0.47 | 0.55 | 0.63 | 0.63 | 0.72 | 0.50 | 0.59 | 0.67 | 0.67 | 0.76 | 0.53 | 0.62 | 0.71 | 0.71 | 0.81 | 0.56 | 0.66 | 0.75 | 0.75 | 0.85 |
| | | PI | 0.48 | 0.48 | 0.48 | 0.48 | 0.48 | 0.51 | 0.51 | 0.51 | 0.51 | 0.51 | 0.54 | 0.54 | 0.54 | 0.54 | 0.54 | 0.57 | 0.57 | 0.57 | 0.57 | 0.57 |
| | 14°F (-10.0°C) | TC | 11597 | 11613 | 11625 | 11626 | 11641 | 12296 | 12310 | 12323 | 12325 | 12340 | 13031 | 13047 | 13062 | 13064 | 13079 | 13816 | 13831 | 13846 | 13848 | 13865 |
| | | S/T | 0.47 | 0.55 | 0.63 | 0.63 | 0.72 | 0.50 | 0.59 | 0.67 | 0.67 | 0.76 | 0.53 | 0.62 | 0.71 | 0.71 | 0.81 | 0.56 | 0.66 | 0.75 | 0.75 | 0.86 |
| | | PI | 0.47 | 0.47 | 0.47 | 0.47 | 0.47 | 0.49 | 0.49 | 0.50 | 0.50 | 0.50 | 0.52 | 0.52 | 0.53 | 0.53 | 0.53 | 0.56 | 0.56 | 0.56 | 0.56 | 0.56 |
| | 17°F (-8.3°C) | TC | 12178 | 12194 | 12207 | 12208 | 12224 | 12912 | 12927 | 12940 | 12942 | 12957 | 13683 | 13701 | 13716 | 13718 | 13734 | 14507 | 14523 | 14539 | 14541 | 14559 |
| | | S/T | 0.47 | 0.56 | 0.63 | 0.63 | 0.72 | 0.50 | 0.59 | 0.67 | 0.67 | 0.76 | 0.53 | 0.63 | 0.71 | 0.71 | 0.81 | 0.57 | 0.66 | 0.75 | 0.75 | 0.86 |
| | | PI | 0.46 | 0.46 | 0.46 | 0.46 | 0.46 | 0.49 | 0.49 | 0.49 | 0.49 | 0.49 | 0.52 | 0.52 | 0.52 | 0.52 | 0.52 | 0.55 | 0.55 | 0.55 | 0.55 | 0.55 |
| | 23°F (-5.0°C) | TC | 11856 | 11872 | 11885 | 11885 | 11901 | 12570 | 12585 | 12598 | 12600 | 12615 | 13321 | 13339 | 13353 | 13356 | 13371 | 14124 | 14139 | 14155 | 14157 | 14175 |
| | | S/T | 0.48 | 0.56 | 0.64 | 0.64 | 0.72 | 0.51 | 0.59 | 0.67 | 0.67 | 0.77 | 0.54 | 0.63 | 0.71 | 0.71 | 0.81 | 0.57 | 0.67 | 0.76 | 0.76 | 0.86 |
| | | PI | 0.51 | 0.51 | 0.51 | 0.51 | 0.51 | 0.54 | 0.54 | 0.54 | 0.54 | 0.54 | 0.57 | 0.57 | 0.58 | 0.58 | 0.58 | 0.61 | 0.61 | 0.61 | 0.61 | 0.61 |
| | 35°F (1.7°C) | TC | 11212 | 11227 | 11239 | 11240 | 11255 | 11888 | 11902 | 11914 | 11916 | 11930 | 12598 | 12614 | 12628 | 12631 | 12645 | 13357 | 13372 | 13386 | 13388 | 13405 |
| | | S/T | 0.48 | 0.56 | 0.64 | 0.64 | 0.73 | 0.51 | 0.60 | 0.68 | 0.68 | 0.77 | 0.54 | 0.63 | 0.72 | 0.72 | 0.82 | 0.57 | 0.67 | 0.76 | 0.76 | 0.87 |
| | | PI | 0.61 | 0.61 | 0.61 | 0.61 | 0.61 | 0.64 | 0.64 | 0.65 | 0.65 | 0.65 | 0.68 | 0.68 | 0.68 | 0.68 | 0.68 | 0.72 | 0.72 | 0.73 | 0.73 | 0.73 |
| | 41°F (5.0°C) | TC | 10850 | 10865 | 10876 | 10877 | 10892 | 11504 | 11518 | 11529 | 11531 | 11545 | 12191 | 12207 | 12221 | 12223 | 12237 | 12926 | 12940 | 12954 | 12956 | 12972 |
| | | S/T | 0.48 | 0.56 | 0.64 | 0.64 | 0.73 | 0.51 | 0.60 | 0.68 | 0.68 | 0.77 | 0.54 | 0.63 | 0.72 | 0.72 | 0.82 | 0.57 | 0.67 | 0.76 | 0.76 | 0.87 |
| | | PI | 0.50 | 0.50 | 0.50 | 0.50 | 0.50 | 0.53 | 0.53 | 0.53 | 0.53 | 0.53 | 0.56 | 0.56 | 0.56 | 0.56 | 0.56 | 0.60 | 0.60 | 0.60 | 0.60 | 0.60 |
| | 47°F (8.3°C) | TC | 10488 | 10502 | 10513 | 10514 | 10528 | 11120 | 11133 | 11144 | 11146 | 11160 | 11784 | 11800 | 11813 | 11815 | 11828 | 12494 | 12508 | 12522 | 12524 | 12539 |
| | | S/T | 0.48 | 0.57 | 0.64 | 0.64 | 0.73 | 0.51 | 0.60 | 0.68 | 0.68 | 0.78 | 0.54 | 0.63 | 0.72 | 0.72 | 0.82 | 0.57 | 0.67 | 0.76 | 0.76 | 0.87 |
| | | PI | 0.39 | 0.39 | 0.40 | 0.40 | 0.40 | 0.42 | 0.42 | 0.42 | 0.42 | 0.42 | 0.44 | 0.44 | 0.44 | 0.44 | 0.44 | 0.47 | 0.47 | 0.47 | 0.47 | 0.47 |
| | 50°F (10.0°C) | TC | 10471 | 10486 | 10497 | 10497 | 10511 | 11103 | 11116 | 11127 | 11129 | 11142 | 11766 | 11781 | 11794 | 11796 | 11810 | 12475 | 12488 | 12502 | 12504 | 12519 |
| | | S/T | 0.48 | 0.57 | 0.65 | 0.65 | 0.74 | 0.51 | 0.60 | 0.68 | 0.68 | 0.78 | 0.54 | 0.64 | 0.73 | 0.73 | 0.83 | 0.58 | 0.68 | 0.77 | 0.77 | 0.88 |
| | | PI | 0.41 | 0.41 | 0.41 | 0.41 | 0.41 | 0.43 | 0.43 | 0.43 | 0.43 | 0.43 | 0.46 | 0.46 | 0.46 | 0.46 | 0.46 | 0.48 | 0.49 | 0.49 | 0.49 | 0.49 |
| | 59°F (15.0°C) | TC | 10422 | 10436 | 10447 | 10447 | 10462 | 11050 | 11063 | 11074 | 11076 | 11089 | 11710 | 11725 | 11738 | 11740 | 11754 | 12416 | 12429 | 12443 | 12445 | 12460 |
| | | S/T | 0.49 | 0.57 | 0.65 | 0.65 | 0.74 | 0.52 | 0.61 | 0.69 | 0.69 | 0.78 | 0.55 | 0.64 | 0.73 | 0.73 | 0.83 | 0.58 | 0.68 | 0.77 | 0.77 | 0.88 |
| | | PI | 0.45 | 0.45 | 0.45 | 0.45 | 0.45 | 0.47 | 0.47 | 0.47 | 0.47 | 0.47 | 0.50 | 0.50 | 0.50 | 0.50 | 0.50 | 0.53 | 0.53 | 0.53 | 0.53 | 0.53 |
| | 68°F (20.0°C) | TC | 10372 | 10386 | 10397 | 10398 | 10412 | 10997 | 11010 | 11021 | 11023 | 11036 | 11654 | 11669 | 11682 | 11684 | 11698 | 12356 | 12370 | 12383 | 12385 | 12401 |
| | | S/T | 0.50 | 0.59 | 0.67 | 0.67 | 0.76 | 0.53 | 0.62 | 0.71 | 0.71 | 0.80 | 0.56 | 0.66 | 0.75 | 0.75 | 0.85 | 0.59 | 0.70 | 0.79 | 0.79 | 0.90 |
| | | PI | 0.48 | 0.48 | 0.48 | 0.48 | 0.49 | 0.51 | 0.51 | 0.51 | 0.51 | 0.51 | 0.54 | 0.54 | 0.54 | 0.54 | 0.55 | 0.58 | 0.58 | 0.58 | 0.58 | 0.58 |
| | 77°F (25.0°C) | TC | 10322 | 10336 | 10347 | 10348 | 10362 | 10944 | 10957 | 10968 | 10970 | 10983 | 11598 | 11613 | 11626 | 11629 | 11641 | 12297 | 12311 | 12324 | 12326 | 12341 |
| | | S/T | 0.51 | 0.59 | 0.67 | 0.67 | 0.77 | 0.54 | 0.63 | 0.72 | 0.72 | 0.82 | 0.57 | 0.67 | 0.76 | 0.76 | 0.86 | 0.60 | 0.71 | 0.80 | 0.80 | 0.92 |
| | | PI | 0.52 | 0.52 | 0.52 | 0.52 | 0.52 | 0.55 | 0.55 | 0.55 | 0.55 | 0.56 | 0.59 | 0.59 | 0.59 | 0.59 | 0.59 | 0.62 | 0.62 | 0.62 | 0.62 | 0.62 |
| | 82°F (27.8°C) | TC | 10373 | 10387 | 10398 | 10399 | 10413 | 10998 | 11011 | 11022 | 11024 | 11037 | 11655 | 11671 | 11684 | 11686 | 11699 | 12358 | 12371 | 12385 | 12386 | 12402 |
| | | S/T | 0.51 | 0.60 | 0.68 | 0.68 | 0.78 | 0.54 | 0.64 | 0.72 | 0.72 | 0.83 | 0.58 | 0.68 | 0.77 | 0.77 | 0.88 | 0.61 | 0.72 | 0.81 | 0.81 | 0.93 |
| | | PI | 0.61 | 0.61 | 0.61 | 0.61 | 0.62 | 0.65 | 0.65 | 0.65 | 0.65 | 0.65 | 0.69 | 0.69 | 0.69 | 0.69 | 0.69 | 0.73 | 0.73 | 0.73 | 0.73 | 0.73 |
| | 86°F (30.0°C) | TC | 10513 | 10527 | 10538 | 10539 | 10553 | 11146 | 11159 | 11170 | 11173 | 11186 | 11812 | 11827 | 11841 | 11843 | 11856 | 12524 | 12537 | 12551 | 12553 | 12569 |
| | | S/T | 0.52 | 0.61 | 0.69 | 0.69 | 0.79 | 0.55 | 0.65 | 0.73 | 0.73 | 0.84 | 0.58 | 0.68 | 0.78 | 0.78 | 0.89 | 0.62 | 0.73 | 0.82 | 0.82 | 0.94 |
| | | PI | 0.77 | 0.77 | 0.78 | 0.78 | 0.78 | 0.82 | 0.82 | 0.82 | 0.82 | 0.82 | 0.87 | 0.87 | 0.87 | 0.87 | 0.87 | 0.92 | 0.92 | 0.92 | 0.92 | 0.92 |
| | 95°F (35.0°C) | TC | 10827 | 10841 | 10853 | 10853 | 10868 | 11479 | 11493 | 11504 | 11506 | 11520 | 12165 | 12181 | 12194 | 12196 | 12210 | 12898 | 12912 | 12926 | 12928 | 12944 |
| | | S/T | 0.52 | 0.61 | 0.69 | 0.69 | 0.79 | 0.55 | 0.65 | 0.73 | 0.73 | 0.84 | 0.58 | 0.68 | 0.78 | 0.78 | 0.89 | 0.62 | 0.73 | 0.82 | 0.82 | 0.94 |
| | | PI | 1.14 | 1.14 | 1.14 | 1.14 | 1.14 | 1.20 | 1.21 | 1.21 | 1.21 | 1.21 | 1.28 | 1.28 | 1.28 | 1.28 | 1.28 | 1.35 | 1.35 | 1.36 | 1.36 | 1.36 |

Manufacturer reserves the right to change, at any time, specifications and designs without notice and without obligations.

# COOLING PERFORMANCE DATA (HEAT PUMP) (CONTINUED)

| AIRFLOW (CFM) | OUTDOOR DB °F (°C) | ID WB °F (°C) | 60.8°F(16.0°C) | | | | | 64.4°F(18.0°C) | | | | | 67°F(19.4°C) | | | | | 71.6°F(22.0°C) | | | | |
|---|---|---|---|---|---|---|---|---|---|---|---|---|---|---|---|---|---|---|---|---|---|---|
| | | ID DB °F (°C) | 73.4°F (23.0°C) | 77.0°F (25.0°C) | 80.0°F (26.7°C) | 80.6°F (27.0°C) | 84.2°F (29.0°C) | 73.4°F (23.0°C) | 77.0°F (25.0°C) | 80.0°F (26.7°C) | 80.6°F (27.0°C) | 84.2°F (29.0°C) | 73.4°F (23.0°C) | 77.0°F (25.0°C) | 80.0°F (26.7°C) | 80.6°F (27.0°C) | 84.2°F (29.0°C) | 73.4°F (23.0°C) | 77.0°F (25.0°C) | 80.0°F (26.7°C) | 80.6°F (27.0°C) | 84.2°F (29.0°C) |
| 312 | 5°F (-15.0°C) | TC | 10142 | 10156 | 10167 | 10167 | 10181 | 10753 | 10766 | 10777 | 10779 | 10792 | 11396 | 11411 | 11423 | 11425 | 11438 | 12082 | 12096 | 12109 | 12111 | 12126 |
| | | S/T | 0.49 | 0.57 | 0.65 | 0.65 | 0.74 | 0.51 | 0.60 | 0.69 | 0.69 | 0.78 | 0.55 | 0.64 | 0.73 | 0.73 | 0.83 | 0.58 | 0.68 | 0.77 | 0.77 | 0.88 |
| | | PI | 0.49 | 0.49 | 0.49 | 0.49 | 0.49 | 0.52 | 0.52 | 0.52 | 0.52 | 0.52 | 0.55 | 0.55 | 0.55 | 0.55 | 0.55 | 0.59 | 0.59 | 0.59 | 0.59 | 0.59 |
| | 14°F (-10.0°C) | TC | 11935 | 11951 | 11964 | 11964 | 11980 | 12654 | 12669 | 12682 | 12684 | 12699 | 13410 | 13427 | 13442 | 13445 | 13460 | 14218 | 14233 | 14249 | 14251 | 14269 |
| | | S/T | 0.49 | 0.57 | 0.65 | 0.65 | 0.74 | 0.52 | 0.61 | 0.69 | 0.69 | 0.78 | 0.55 | 0.64 | 0.73 | 0.73 | 0.83 | 0.58 | 0.68 | 0.77 | 0.77 | 0.88 |
| | | PI | 0.48 | 0.48 | 0.48 | 0.48 | 0.48 | 0.51 | 0.51 | 0.51 | 0.51 | 0.51 | 0.54 | 0.54 | 0.54 | 0.54 | 0.54 | 0.57 | 0.57 | 0.57 | 0.57 | 0.57 |
| | 17°F (-8.3°C) | TC | 12532 | 12549 | 12563 | 12563 | 12580 | 13288 | 13303 | 13316 | 13319 | 13335 | 14081 | 14100 | 14115 | 14118 | 14134 | 14930 | 14946 | 14962 | 14965 | 14983 |
| | | S/T | 0.49 | 0.57 | 0.65 | 0.65 | 0.74 | 0.52 | 0.61 | 0.69 | 0.69 | 0.79 | 0.55 | 0.64 | 0.73 | 0.73 | 0.83 | 0.58 | 0.68 | 0.78 | 0.78 | 0.88 |
| | | PI | 0.48 | 0.48 | 0.48 | 0.48 | 0.48 | 0.50 | 0.51 | 0.51 | 0.51 | 0.51 | 0.53 | 0.54 | 0.54 | 0.54 | 0.54 | 0.57 | 0.57 | 0.57 | 0.57 | 0.57 |
| | 23°F (-5.0°C) | TC | 12201 | 12218 | 12231 | 12231 | 12248 | 12936 | 12952 | 12965 | 12967 | 12982 | 13709 | 13727 | 13742 | 13745 | 13760 | 14535 | 14551 | 14567 | 14569 | 14587 |
| | | S/T | 0.49 | 0.58 | 0.65 | 0.65 | 0.75 | 0.52 | 0.61 | 0.69 | 0.69 | 0.79 | 0.55 | 0.65 | 0.74 | 0.74 | 0.84 | 0.58 | 0.69 | 0.78 | 0.78 | 0.89 |
| | | PI | 0.53 | 0.53 | 0.53 | 0.53 | 0.53 | 0.56 | 0.56 | 0.56 | 0.56 | 0.56 | 0.59 | 0.59 | 0.59 | 0.59 | 0.59 | 0.63 | 0.63 | 0.63 | 0.63 | 0.63 |
| | 35°F (1.7°C) | TC | 11539 | 11554 | 11567 | 11567 | 11583 | 12234 | 12249 | 12261 | 12263 | 12278 | 12965 | 12982 | 12996 | 12999 | 13013 | 13746 | 13761 | 13776 | 13778 | 13795 |
| | | S/T | 0.49 | 0.58 | 0.66 | 0.66 | 0.75 | 0.52 | 0.61 | 0.70 | 0.70 | 0.79 | 0.55 | 0.65 | 0.74 | 0.74 | 0.84 | 0.59 | 0.69 | 0.78 | 0.78 | 0.89 |
| | | PI | 0.63 | 0.63 | 0.63 | 0.63 | 0.63 | 0.66 | 0.66 | 0.66 | 0.66 | 0.67 | 0.70 | 0.70 | 0.70 | 0.70 | 0.70 | 0.74 | 0.75 | 0.75 | 0.75 | 0.75 |
| | 41°F (5.0°C) | TC | 11166 | 11181 | 11193 | 11194 | 11209 | 11839 | 11853 | 11865 | 11867 | 11881 | 12546 | 12563 | 12577 | 12579 | 12593 | 13302 | 13317 | 13331 | 13333 | 13350 |
| | | S/T | 0.49 | 0.58 | 0.66 | 0.66 | 0.75 | 0.52 | 0.61 | 0.70 | 0.70 | 0.80 | 0.56 | 0.65 | 0.74 | 0.74 | 0.84 | 0.59 | 0.69 | 0.78 | 0.78 | 0.89 |
| | | PI | 0.52 | 0.52 | 0.52 | 0.52 | 0.52 | 0.55 | 0.55 | 0.55 | 0.55 | 0.55 | 0.58 | 0.58 | 0.58 | 0.58 | 0.58 | 0.61 | 0.61 | 0.62 | 0.62 | 0.62 |
| | 47°F (8.3°C) | TC | 10793 | 10808 | 10820 | 10820 | 10835 | 11444 | 11458 | 11469 | 11471 | 11485 | 12128 | 12143 | 12157 | 12159 | 12173 | 12858 | 12872 | 12886 | 12888 | 12904 |
| | | S/T | 0.50 | 0.58 | 0.66 | 0.66 | 0.75 | 0.53 | 0.62 | 0.70 | 0.70 | 0.80 | 0.56 | 0.65 | 0.74 | 0.74 | 0.85 | 0.59 | 0.69 | 0.79 | 0.79 | 0.90 |
| | | PI | 0.41 | 0.41 | 0.41 | 0.41 | 0.41 | 0.43 | 0.43 | 0.43 | 0.43 | 0.43 | 0.46 | 0.46 | 0.46 | 0.46 | 0.46 | 0.48 | 0.48 | 0.48 | 0.48 | 0.49 |
| | 50°F (10.0°C) | TC | 10776 | 10791 | 10803 | 10803 | 10818 | 11426 | 11439 | 11451 | 11453 | 11467 | 12109 | 12124 | 12138 | 12140 | 12154 | 12838 | 12852 | 12866 | 12868 | 12884 |
| | | S/T | 0.50 | 0.58 | 0.66 | 0.66 | 0.76 | 0.53 | 0.62 | 0.70 | 0.70 | 0.80 | 0.56 | 0.66 | 0.75 | 0.75 | 0.85 | 0.59 | 0.70 | 0.79 | 0.79 | 0.90 |
| | | PI | 0.42 | 0.42 | 0.42 | 0.42 | 0.42 | 0.44 | 0.44 | 0.45 | 0.45 | 0.45 | 0.47 | 0.47 | 0.47 | 0.47 | 0.47 | 0.50 | 0.50 | 0.50 | 0.50 | 0.50 |
| | 59°F (15.0°C) | TC | 10725 | 10740 | 10751 | 10752 | 10766 | 11372 | 11385 | 11396 | 11399 | 11412 | 12051 | 12067 | 12080 | 12082 | 12096 | 12777 | 12791 | 12805 | 12807 | 12823 |
| | | S/T | 0.50 | 0.59 | 0.67 | 0.67 | 0.76 | 0.53 | 0.62 | 0.71 | 0.71 | 0.81 | 0.56 | 0.66 | 0.75 | 0.75 | 0.86 | 0.60 | 0.70 | 0.80 | 0.80 | 0.91 |
| | | PI | 0.46 | 0.46 | 0.46 | 0.46 | 0.46 | 0.49 | 0.49 | 0.49 | 0.49 | 0.49 | 0.51 | 0.52 | 0.52 | 0.52 | 0.52 | 0.55 | 0.55 | 0.55 | 0.55 | 0.55 |
| | 68°F (20.0°C) | TC | 10674 | 10689 | 10700 | 10701 | 10715 | 11317 | 11331 | 11342 | 11344 | 11358 | 11994 | 12009 | 12023 | 12025 | 12038 | 12716 | 12730 | 12744 | 12746 | 12762 |
| | | S/T | 0.51 | 0.60 | 0.69 | 0.69 | 0.78 | 0.54 | 0.64 | 0.73 | 0.73 | 0.83 | 0.58 | 0.68 | 0.77 | 0.77 | 0.88 | 0.61 | 0.72 | 0.82 | 0.82 | 0.93 |
| | | PI | 0.50 | 0.50 | 0.50 | 0.50 | 0.50 | 0.53 | 0.53 | 0.53 | 0.53 | 0.53 | 0.56 | 0.56 | 0.56 | 0.56 | 0.56 | 0.59 | 0.59 | 0.59 | 0.59 | 0.60 |
| | 77°F (25.0°C) | TC | 10623 | 10637 | 10649 | 10649 | 10664 | 11263 | 11277 | 11288 | 11290 | 11303 | 11936 | 11952 | 11965 | 11967 | 11981 | 12655 | 12669 | 12683 | 12685 | 12701 |
| | | S/T | 0.52 | 0.61 | 0.69 | 0.69 | 0.79 | 0.55 | 0.65 | 0.74 | 0.74 | 0.84 | 0.59 | 0.69 | 0.78 | 0.78 | 0.89 | 0.62 | 0.73 | 0.83 | 0.83 | 0.94 |
| | | PI | 0.54 | 0.54 | 0.54 | 0.54 | 0.54 | 0.57 | 0.57 | 0.57 | 0.57 | 0.57 | 0.60 | 0.60 | 0.60 | 0.61 | 0.61 | 0.64 | 0.64 | 0.64 | 0.64 | 0.64 |
| | 82°F (27.8°C) | TC | 10675 | 10690 | 10701 | 10702 | 10716 | 11319 | 11332 | 11343 | 11345 | 11359 | 11995 | 12010 | 12024 | 12026 | 12039 | 12718 | 12731 | 12745 | 12747 | 12763 |
| | | S/T | 0.53 | 0.62 | 0.70 | 0.70 | 0.80 | 0.56 | 0.66 | 0.75 | 0.75 | 0.85 | 0.59 | 0.70 | 0.79 | 0.79 | 0.90 | 0.63 | 0.74 | 0.84 | 0.84 | 0.95 |
| | | PI | 0.63 | 0.63 | 0.63 | 0.63 | 0.63 | 0.67 | 0.67 | 0.67 | 0.67 | 0.67 | 0.71 | 0.71 | 0.71 | 0.71 | 0.71 | 0.75 | 0.75 | 0.75 | 0.75 | 0.75 |
| | 86°F (30.0°C) | TC | 10819 | 10833 | 10845 | 10846 | 10860 | 11471 | 11484 | 11496 | 11498 | 11512 | 12156 | 12172 | 12186 | 12188 | 12201 | 12889 | 12903 | 12917 | 12919 | 12935 |
| | | S/T | 0.53 | 0.63 | 0.71 | 0.71 | 0.81 | 0.57 | 0.66 | 0.75 | 0.75 | 0.86 | 0.60 | 0.70 | 0.80 | 0.80 | 0.91 | 0.64 | 0.75 | 0.85 | 0.85 | 0.97 |
| | | PI | 0.80 | 0.80 | 0.80 | 0.80 | 0.80 | 0.84 | 0.85 | 0.85 | 0.85 | 0.85 | 0.89 | 0.90 | 0.90 | 0.90 | 0.90 | 0.95 | 0.95 | 0.95 | 0.95 | 0.95 |
| | 95°F (35.0°C) | TC | 11142 | 11157 | 11169 | 11169 | 11184 | 11813 | 11827 | 11839 | 11841 | 11855 | 12519 | 12535 | 12549 | 12552 | 12566 | 13273 | 13288 | 13302 | 13304 | 13321 |
| | | S/T | 0.53 | 0.63 | 0.71 | 0.71 | 0.81 | 0.57 | 0.66 | 0.75 | 0.75 | 0.86 | 0.60 | 0.70 | 0.80 | 0.80 | 0.91 | 0.64 | 0.75 | 0.85 | 0.85 | 0.97 |
| | | PI | 1.17 | 1.17 | 1.17 | 1.17 | 1.17 | 1.24 | 1.24 | 1.24 | 1.24 | 1.24 | 1.31 | 1.31 | 1.32 | 1.32 | 1.32 | 1.39 | 1.39 | 1.39 | 1.40 | 1.40 |

Manufacturer reserves the right to change, at any time, specifications and designs without notice and without obligations.

# COOLING PERFORMANCE DATA (HEAT PUMP) (CONTINUED)

| AIRFLOW (CFM) | OUTDOOR DB °F (°C) | ID WB °F (°C) | 60.8°F(16.0°C) | | | | | 64.4°F(18.0°C) | | | | | 67°F(19.4°C) | | | | | 71.6°F(22.0°C) | | | | |
|---|---|---|---|---|---|---|---|---|---|---|---|---|---|---|---|---|---|---|---|---|---|---|
| | | ID DB °F (°C) | 73.4°F (23.0°C) | 77.0°F (25.0°C) | 80.0°F (26.7°C) | 80.6°F (27.0°C) | 84.2°F (29.0°C) | 73.4°F (23.0°C) | 77.0°F (25.0°C) | 80.0°F (26.7°C) | 80.6°F (27.0°C) | 84.2°F (29.0°C) | 73.4°F (23.0°C) | 77.0°F (25.0°C) | 80.0°F (26.7°C) | 80.6°F (27.0°C) | 84.2°F (29.0°C) | 73.4°F (23.0°C) | 77.0°F (25.0°C) | 80.0°F (26.7°C) | 80.6°F (27.0°C) | 84.2°F (29.0°C) |
| 9k | | | | | | | | | | | | | | | | | | | | | | |
| 176 | 5°F (-15.0°C) | TC | 10378 | 10392 | 10403 | 10404 | 10418 | 11003 | 11016 | 11027 | 11030 | 11043 | 11661 | 11676 | 11689 | 11691 | 11704 | 12363 | 12377 | 12390 | 12392 | 12408 |
| | | S/T | 0.45 | 0.52 | 0.59 | 0.59 | 0.68 | 0.47 | 0.55 | 0.63 | 0.63 | 0.72 | 0.50 | 0.59 | 0.67 | 0.67 | 0.76 | 0.53 | 0.62 | 0.71 | 0.71 | 0.81 |
| | | PI | 0.53 | 0.54 | 0.54 | 0.54 | 0.54 | 0.57 | 0.57 | 0.57 | 0.57 | 0.57 | 0.60 | 0.60 | 0.60 | 0.60 | 0.60 | 0.64 | 0.64 | 0.64 | 0.64 | 0.64 |
| | 14°F (-10.0°C) | TC | 10509 | 10523 | 10535 | 10535 | 10549 | 11143 | 11156 | 11167 | 11169 | 11182 | 11808 | 11824 | 11837 | 11839 | 11852 | 12520 | 12533 | 12547 | 12549 | 12565 |
| | | S/T | 0.45 | 0.52 | 0.60 | 0.60 | 0.68 | 0.47 | 0.56 | 0.63 | 0.63 | 0.72 | 0.50 | 0.59 | 0.67 | 0.67 | 0.76 | 0.53 | 0.62 | 0.71 | 0.71 | 0.81 |
| | | PI | 0.50 | 0.50 | 0.51 | 0.51 | 0.51 | 0.53 | 0.53 | 0.54 | 0.54 | 0.54 | 0.57 | 0.57 | 0.57 | 0.57 | 0.57 | 0.60 | 0.60 | 0.60 | 0.60 | 0.60 |
| | 17°F (-8.3°C) | TC | 10553 | 10567 | 10579 | 10579 | 10593 | 11189 | 11202 | 11213 | 11216 | 11229 | 11858 | 11873 | 11886 | 11888 | 11902 | 12572 | 12586 | 12599 | 12601 | 12617 |
| | | S/T | 0.45 | 0.53 | 0.60 | 0.60 | 0.68 | 0.47 | 0.56 | 0.63 | 0.63 | 0.72 | 0.50 | 0.59 | 0.67 | 0.67 | 0.77 | 0.53 | 0.63 | 0.71 | 0.71 | 0.81 |
| | | PI | 0.49 | 0.49 | 0.49 | 0.49 | 0.50 | 0.52 | 0.52 | 0.52 | 0.52 | 0.53 | 0.55 | 0.56 | 0.56 | 0.56 | 0.56 | 0.59 | 0.59 | 0.59 | 0.59 | 0.59 |
| | 23°F (-5.0°C) | TC | 10307 | 10321 | 10332 | 10332 | 10346 | 10928 | 10941 | 10952 | 10954 | 10967 | 11581 | 11596 | 11609 | 11611 | 11624 | 12278 | 12292 | 12305 | 12307 | 12322 |
| | | S/T | 0.45 | 0.53 | 0.60 | 0.60 | 0.68 | 0.48 | 0.56 | 0.64 | 0.64 | 0.73 | 0.51 | 0.59 | 0.67 | 0.67 | 0.77 | 0.54 | 0.63 | 0.71 | 0.71 | 0.82 |
| | | PI | 0.54 | 0.55 | 0.55 | 0.55 | 0.55 | 0.58 | 0.58 | 0.58 | 0.58 | 0.58 | 0.61 | 0.61 | 0.61 | 0.61 | 0.61 | 0.65 | 0.65 | 0.65 | 0.65 | 0.65 |
| | 35°F (1.7°C) | TC | 9814 | 9827 | 9838 | 9838 | 9851 | 10405 | 10418 | 10428 | 10430 | 10442 | 11027 | 11041 | 11054 | 11056 | 11068 | 11691 | 11704 | 11717 | 11719 | 11733 |
| | | S/T | 0.45 | 0.53 | 0.60 | 0.60 | 0.69 | 0.48 | 0.56 | 0.64 | 0.64 | 0.73 | 0.51 | 0.60 | 0.68 | 0.68 | 0.77 | 0.54 | 0.63 | 0.72 | 0.72 | 0.82 |
| | | PI | 0.65 | 0.65 | 0.65 | 0.65 | 0.65 | 0.69 | 0.69 | 0.69 | 0.69 | 0.69 | 0.73 | 0.73 | 0.73 | 0.73 | 0.73 | 0.77 | 0.77 | 0.77 | 0.77 | 0.77 |
| | 41°F (5.0°C) | TC | 9989 | 10002 | 10013 | 10014 | 10027 | 10591 | 10603 | 10614 | 10616 | 10629 | 11224 | 11238 | 11251 | 11253 | 11265 | 11900 | 11913 | 11926 | 11928 | 11942 |
| | | S/T | 0.45 | 0.53 | 0.60 | 0.60 | 0.69 | 0.48 | 0.56 | 0.64 | 0.64 | 0.73 | 0.51 | 0.60 | 0.68 | 0.68 | 0.77 | 0.54 | 0.63 | 0.72 | 0.72 | 0.82 |
| | | PI | 0.57 | 0.57 | 0.57 | 0.57 | 0.57 | 0.60 | 0.60 | 0.60 | 0.60 | 0.60 | 0.64 | 0.64 | 0.64 | 0.64 | 0.64 | 0.67 | 0.68 | 0.68 | 0.68 | 0.68 |
| | 47°F (8.3°C) | TC | 10164 | 10178 | 10189 | 10189 | 10203 | 10777 | 10789 | 10800 | 10802 | 10815 | 11420 | 11435 | 11448 | 11450 | 11463 | 12108 | 12122 | 12135 | 12137 | 12152 |
| | | S/T | 0.45 | 0.53 | 0.61 | 0.61 | 0.69 | 0.48 | 0.57 | 0.64 | 0.64 | 0.73 | 0.51 | 0.60 | 0.68 | 0.68 | 0.78 | 0.54 | 0.64 | 0.72 | 0.72 | 0.82 |
| | | PI | 0.49 | 0.49 | 0.49 | 0.49 | 0.49 | 0.51 | 0.52 | 0.52 | 0.52 | 0.52 | 0.55 | 0.55 | 0.55 | 0.55 | 0.55 | 0.58 | 0.58 | 0.58 | 0.58 | 0.58 |
| | 50°F (10.0°C) | TC | 10083 | 10097 | 10108 | 10108 | 10122 | 10691 | 10704 | 10714 | 10716 | 10729 | 11330 | 11344 | 11357 | 11359 | 11372 | 12012 | 12025 | 12038 | 12040 | 12055 |
| | | S/T | 0.46 | 0.54 | 0.61 | 0.61 | 0.69 | 0.48 | 0.57 | 0.65 | 0.65 | 0.74 | 0.51 | 0.60 | 0.68 | 0.68 | 0.78 | 0.54 | 0.64 | 0.73 | 0.73 | 0.83 |
| | | PI | 0.50 | 0.50 | 0.50 | 0.50 | 0.50 | 0.53 | 0.53 | 0.53 | 0.53 | 0.53 | 0.56 | 0.56 | 0.56 | 0.56 | 0.56 | 0.60 | 0.60 | 0.60 | 0.60 | 0.60 |
| | 59°F (15.0°C) | TC | 9841 | 9854 | 9865 | 9865 | 9879 | 10434 | 10447 | 10457 | 10459 | 10471 | 11058 | 11072 | 11084 | 11086 | 11099 | 11724 | 11737 | 11749 | 11751 | 11766 |
| | | S/T | 0.46 | 0.54 | 0.61 | 0.61 | 0.70 | 0.49 | 0.57 | 0.65 | 0.65 | 0.74 | 0.52 | 0.61 | 0.69 | 0.69 | 0.78 | 0.55 | 0.64 | 0.73 | 0.73 | 0.83 |
| | | PI | 0.54 | 0.54 | 0.54 | 0.54 | 0.54 | 0.57 | 0.57 | 0.58 | 0.58 | 0.58 | 0.61 | 0.61 | 0.61 | 0.61 | 0.61 | 0.65 | 0.65 | 0.65 | 0.65 | 0.65 |
| | 68°F (20.0°C) | TC | 9599 | 9612 | 9622 | 9623 | 9636 | 10178 | 10190 | 10200 | 10202 | 10214 | 10786 | 10800 | 10812 | 10814 | 10826 | 11435 | 11448 | 11460 | 11462 | 11476 |
| | | S/T | 0.47 | 0.55 | 0.63 | 0.63 | 0.72 | 0.50 | 0.59 | 0.67 | 0.67 | 0.76 | 0.53 | 0.62 | 0.71 | 0.71 | 0.81 | 0.56 | 0.66 | 0.75 | 0.75 | 0.85 |
| | | PI | 0.58 | 0.58 | 0.59 | 0.59 | 0.59 | 0.62 | 0.62 | 0.62 | 0.62 | 0.62 | 0.66 | 0.66 | 0.66 | 0.66 | 0.66 | 0.70 | 0.70 | 0.70 | 0.70 | 0.70 |
| | 77°F (25.0°C) | TC | 9357 | 9370 | 9380 | 9380 | 9393 | 9921 | 9933 | 9942 | 9944 | 9956 | 10514 | 10527 | 10539 | 10541 | 10553 | 11147 | 11159 | 11171 | 11173 | 11187 |
| | | S/T | 0.48 | 0.56 | 0.64 | 0.64 | 0.73 | 0.51 | 0.59 | 0.68 | 0.68 | 0.77 | 0.54 | 0.63 | 0.72 | 0.72 | 0.82 | 0.57 | 0.67 | 0.76 | 0.76 | 0.86 |
| | | PI | 0.63 | 0.63 | 0.63 | 0.63 | 0.63 | 0.66 | 0.66 | 0.67 | 0.67 | 0.67 | 0.70 | 0.70 | 0.71 | 0.71 | 0.71 | 0.75 | 0.75 | 0.75 | 0.75 | 0.75 |
| | 82°F (27.8°C) | TC | 9394 | 9407 | 9417 | 9417 | 9430 | 9960 | 9972 | 9982 | 9984 | 9996 | 10555 | 10569 | 10581 | 10583 | 10595 | 11191 | 11203 | 11216 | 11217 | 11231 |
| | | S/T | 0.48 | 0.57 | 0.65 | 0.65 | 0.74 | 0.51 | 0.60 | 0.68 | 0.68 | 0.78 | 0.54 | 0.64 | 0.72 | 0.72 | 0.83 | 0.58 | 0.68 | 0.77 | 0.77 | 0.88 |
| | | PI | 0.70 | 0.70 | 0.70 | 0.70 | 0.70 | 0.74 | 0.74 | 0.74 | 0.74 | 0.74 | 0.79 | 0.79 | 0.79 | 0.79 | 0.79 | 0.83 | 0.83 | 0.83 | 0.83 | 0.84 |
| | 86°F (30.0°C) | TC | 9640 | 9653 | 9664 | 9664 | 9677 | 10221 | 10233 | 10244 | 10246 | 10258 | 10832 | 10846 | 10858 | 10860 | 10872 | 11485 | 11497 | 11510 | 11511 | 11526 |
| | | S/T | 0.49 | 0.57 | 0.65 | 0.65 | 0.74 | 0.52 | 0.61 | 0.69 | 0.69 | 0.79 | 0.55 | 0.65 | 0.73 | 0.73 | 0.84 | 0.58 | 0.68 | 0.78 | 0.78 | 0.89 |
| | | PI | 0.82 | 0.82 | 0.82 | 0.82 | 0.82 | 0.87 | 0.87 | 0.87 | 0.87 | 0.87 | 0.92 | 0.92 | 0.92 | 0.92 | 0.93 | 0.98 | 0.98 | 0.98 | 0.98 | 0.98 |

Manufacturer reserves the right to change, at any time, specifications and designs without notice and without obligations.

# COOLING PERFORMANCE DATA (HEAT PUMP) (CONTINUED)

| AIRFLOW (CFM) | OUTDOOR DB °F (°C) | ID WB °F (°C) | 60.8°F(16.0°C) | | | | | 64.4°F(18.0°C) | | | | | 67°F(19.4°C) | | | | | 71.6°F(22.0°C) | | | | |
|---|---|---|---|---|---|---|---|---|---|---|---|---|---|---|---|---|---|---|---|---|---|---|
| | | ID DB °F (°C) | 73.4°F (23.0°C) | 77.0°F (25.0°C) | 80.0°F (26.7°C) | 80.6°F (27.0°C) | 84.2°F (29.0°C) | 73.4°F (23.0°C) | 77.0°F (25.0°C) | 80.0°F (26.7°C) | 80.6°F (27.0°C) | 84.2°F (29.0°C) | 73.4°F (23.0°C) | 77.0°F (25.0°C) | 80.0°F (26.7°C) | 80.6°F (27.0°C) | 84.2°F (29.0°C) | 73.4°F (23.0°C) | 77.0°F (25.0°C) | 80.0°F (26.7°C) | 80.6°F (27.0°C) | 84.2°F (29.0°C) |
| 176 | 95°F (35.0°C) | TC | 10195 | 10208 | 10219 | 10220 | 10234 | 10809 | 10822 | 10832 | 10835 | 10847 | 11455 | 11470 | 11482 | 11485 | 11497 | 12145 | 12158 | 12171 | 12173 | 12188 |
| | | S/T | 0.49 | 0.57 | 0.65 | 0.65 | 0.74 | 0.52 | 0.61 | 0.69 | 0.69 | 0.79 | 0.55 | 0.65 | 0.73 | 0.73 | 0.84 | 0.58 | 0.68 | 0.78 | 0.78 | 0.89 |
| | | PI | 1.09 | 1.09 | 1.10 | 1.10 | 1.10 | 1.16 | 1.16 | 1.16 | 1.16 | 1.16 | 1.23 | 1.23 | 1.23 | 1.23 | 1.23 | 1.30 | 1.30 | 1.31 | 1.31 | 1.31 |
| | 104°F (40.0°C) | TC | 9375 | 9387 | 9397 | 9398 | 9410 | 9940 | 9951 | 9961 | 9963 | 9975 | 10533 | 10547 | 10559 | 10561 | 10573 | 11168 | 11180 | 11192 | 11194 | 11208 |
| | | S/T | 0.50 | 0.59 | 0.67 | 0.67 | 0.76 | 0.53 | 0.62 | 0.71 | 0.71 | 0.81 | 0.56 | 0.66 | 0.75 | 0.75 | 0.86 | 0.60 | 0.70 | 0.80 | 0.80 | 0.91 |
| | | PI | 1.08 | 1.09 | 1.09 | 1.09 | 1.09 | 1.15 | 1.15 | 1.15 | 1.15 | 1.15 | 1.22 | 1.22 | 1.22 | 1.22 | 1.22 | 1.29 | 1.29 | 1.29 | 1.29 | 1.30 |
| | 110°F (43.0°C) | TC | 8883 | 8895 | 8904 | 8905 | 8917 | 9418 | 9429 | 9439 | 9440 | 9452 | 9981 | 9994 | 10005 | 10007 | 10018 | 10582 | 10594 | 10605 | 10607 | 10620 |
| | | S/T | 0.52 | 0.61 | 0.69 | 0.69 | 0.79 | 0.55 | 0.65 | 0.74 | 0.74 | 0.84 | 0.58 | 0.69 | 0.78 | 0.78 | 0.89 | 0.62 | 0.73 | 0.83 | 0.83 | 0.94 |
| | | PI | 1.08 | 1.08 | 1.08 | 1.08 | 1.08 | 1.14 | 1.14 | 1.15 | 1.15 | 1.15 | 1.21 | 1.21 | 1.21 | 1.21 | 1.22 | 1.28 | 1.29 | 1.29 | 1.29 | 1.29 |
| | 115°F (46.0°C) | TC | 7825 | 7835 | 7844 | 7844 | 7855 | 8296 | 8306 | 8314 | 8316 | 8326 | 8792 | 8803 | 8813 | 8815 | 8825 | 9322 | 9332 | 9342 | 9344 | 9355 |
| | | S/T | 0.53 | 0.62 | 0.70 | 0.70 | 0.80 | 0.56 | 0.66 | 0.74 | 0.74 | 0.85 | 0.59 | 0.69 | 0.79 | 0.79 | 0.90 | 0.63 | 0.74 | 0.84 | 0.84 | 0.95 |
| | | PI | 0.95 | 0.96 | 0.96 | 0.96 | 0.96 | 1.01 | 1.01 | 1.01 | 1.01 | 1.02 | 1.07 | 1.07 | 1.07 | 1.07 | 1.08 | 1.14 | 1.14 | 1.14 | 1.14 | 1.14 |
| | 122°F (50.0°C) | TC | 6414 | 6423 | 6430 | 6430 | 6439 | 6801 | 6809 | 6816 | 6817 | 6825 | 7207 | 7217 | 7225 | 7226 | 7234 | 7641 | 7650 | 7658 | 7659 | 7669 |
| | | S/T | 0.54 | 0.63 | 0.72 | 0.72 | 0.82 | 0.57 | 0.67 | 0.76 | 0.76 | 0.87 | 0.61 | 0.71 | 0.81 | 0.81 | 0.92 | 0.64 | 0.75 | 0.86 | 0.86 | 0.98 |
| | | PI | 0.79 | 0.79 | 0.79 | 0.79 | 0.79 | 0.84 | 0.84 | 0.84 | 0.84 | 0.84 | 0.89 | 0.89 | 0.89 | 0.89 | 0.89 | 0.94 | 0.94 | 0.94 | 0.94 | 0.94 |
| 241 | 5°F (-15.0°C) | TC | 10680 | 10695 | 10706 | 10707 | 10721 | 11324 | 11337 | 11349 | 11351 | 11364 | 12000 | 12016 | 12029 | 12032 | 12045 | 12724 | 12737 | 12751 | 12753 | 12769 |
| | | S/T | 0.46 | 0.54 | 0.61 | 0.61 | 0.70 | 0.49 | 0.57 | 0.65 | 0.65 | 0.74 | 0.52 | 0.60 | 0.69 | 0.69 | 0.78 | 0.55 | 0.64 | 0.73 | 0.73 | 0.83 |
| | | PI | 0.55 | 0.55 | 0.55 | 0.55 | 0.55 | 0.58 | 0.58 | 0.58 | 0.58 | 0.59 | 0.62 | 0.62 | 0.62 | 0.62 | 0.62 | 0.66 | 0.66 | 0.66 | 0.66 | 0.66 |
| | 14°F (-10.0°C) | TC | 10815 | 10830 | 10842 | 10842 | 10857 | 11467 | 11481 | 11492 | 11494 | 11508 | 12152 | 12168 | 12182 | 12184 | 12198 | 12885 | 12899 | 12913 | 12915 | 12931 |
| | | S/T | 0.46 | 0.54 | 0.61 | 0.61 | 0.70 | 0.49 | 0.57 | 0.65 | 0.65 | 0.74 | 0.52 | 0.61 | 0.69 | 0.69 | 0.78 | 0.55 | 0.64 | 0.73 | 0.73 | 0.83 |
| | | PI | 0.52 | 0.52 | 0.52 | 0.52 | 0.52 | 0.55 | 0.55 | 0.55 | 0.55 | 0.55 | 0.58 | 0.58 | 0.58 | 0.58 | 0.58 | 0.62 | 0.62 | 0.62 | 0.62 | 0.62 |
| | 17°F (-8.3°C) | TC | 10860 | 10875 | 10887 | 10887 | 10902 | 11515 | 11529 | 11540 | 11542 | 11556 | 12203 | 12219 | 12232 | 12235 | 12248 | 12938 | 12952 | 12966 | 12968 | 12985 |
| | | S/T | 0.46 | 0.54 | 0.61 | 0.61 | 0.70 | 0.49 | 0.57 | 0.65 | 0.65 | 0.74 | 0.52 | 0.61 | 0.69 | 0.69 | 0.79 | 0.55 | 0.64 | 0.73 | 0.73 | 0.83 |
| | | PI | 0.51 | 0.51 | 0.51 | 0.51 | 0.51 | 0.54 | 0.54 | 0.54 | 0.54 | 0.54 | 0.57 | 0.57 | 0.57 | 0.57 | 0.57 | 0.61 | 0.61 | 0.61 | 0.61 | 0.61 |
| | 23°F (-5.0°C) | TC | 10607 | 10621 | 10633 | 10633 | 10647 | 11246 | 11259 | 11271 | 11273 | 11286 | 11918 | 11933 | 11947 | 11949 | 11962 | 12636 | 12650 | 12664 | 12666 | 12681 |
| | | S/T | 0.46 | 0.54 | 0.62 | 0.62 | 0.70 | 0.49 | 0.58 | 0.65 | 0.65 | 0.75 | 0.52 | 0.61 | 0.69 | 0.69 | 0.79 | 0.55 | 0.65 | 0.74 | 0.74 | 0.84 |
| | | PI | 0.56 | 0.56 | 0.56 | 0.56 | 0.56 | 0.59 | 0.60 | 0.60 | 0.60 | 0.60 | 0.63 | 0.63 | 0.63 | 0.63 | 0.63 | 0.67 | 0.67 | 0.67 | 0.67 | 0.67 |
| | 35°F (1.7°C) | TC | 10100 | 10113 | 10124 | 10125 | 10138 | 10708 | 10721 | 10732 | 10734 | 10746 | 11348 | 11363 | 11375 | 11378 | 11390 | 12032 | 12045 | 12058 | 12060 | 12075 |
| | | S/T | 0.47 | 0.55 | 0.62 | 0.62 | 0.71 | 0.49 | 0.58 | 0.66 | 0.66 | 0.75 | 0.52 | 0.61 | 0.70 | 0.70 | 0.80 | 0.55 | 0.65 | 0.74 | 0.74 | 0.84 |
| | | PI | 0.67 | 0.67 | 0.67 | 0.67 | 0.67 | 0.71 | 0.71 | 0.71 | 0.71 | 0.71 | 0.75 | 0.75 | 0.75 | 0.75 | 0.75 | 0.79 | 0.79 | 0.80 | 0.80 | 0.80 |
| | 41°F (5.0°C) | TC | 10280 | 10294 | 10305 | 10305 | 10319 | 10899 | 10912 | 10923 | 10925 | 10938 | 11551 | 11566 | 11578 | 11581 | 11594 | 12246 | 12260 | 12273 | 12275 | 12290 |
| | | S/T | 0.47 | 0.55 | 0.62 | 0.62 | 0.71 | 0.49 | 0.58 | 0.66 | 0.66 | 0.75 | 0.52 | 0.62 | 0.70 | 0.70 | 0.80 | 0.56 | 0.65 | 0.74 | 0.74 | 0.84 |
| | | PI | 0.58 | 0.58 | 0.58 | 0.58 | 0.59 | 0.62 | 0.62 | 0.62 | 0.62 | 0.62 | 0.66 | 0.66 | 0.66 | 0.66 | 0.66 | 0.69 | 0.70 | 0.70 | 0.70 | 0.70 |
| | 47°F (8.3°C) | TC | 10460 | 10474 | 10485 | 10486 | 10500 | 11090 | 11104 | 11115 | 11117 | 11130 | 11753 | 11768 | 11781 | 11784 | 11797 | 12461 | 12475 | 12488 | 12490 | 12506 |
| | | S/T | 0.47 | 0.55 | 0.62 | 0.62 | 0.71 | 0.50 | 0.58 | 0.66 | 0.66 | 0.75 | 0.53 | 0.62 | 0.70 | 0.70 | 0.80 | 0.56 | 0.65 | 0.74 | 0.74 | 0.85 |
| | | PI | 0.50 | 0.50 | 0.50 | 0.50 | 0.50 | 0.53 | 0.53 | 0.53 | 0.53 | 0.53 | 0.56 | 0.56 | 0.56 | 0.56 | 0.56 | 0.60 | 0.60 | 0.60 | 0.60 | 0.60 |
| | 50°F (10.0°C) | TC | 10377 | 10391 | 10402 | 10403 | 10417 | 11002 | 11015 | 11026 | 11028 | 11042 | 11660 | 11675 | 11688 | 11690 | 11703 | 12362 | 12376 | 12389 | 12391 | 12406 |
| | | S/T | 0.47 | 0.55 | 0.63 | 0.63 | 0.71 | 0.50 | 0.58 | 0.66 | 0.66 | 0.76 | 0.53 | 0.62 | 0.70 | 0.70 | 0.80 | 0.56 | 0.66 | 0.75 | 0.75 | 0.85 |
| | | PI | 0.51 | 0.51 | 0.52 | 0.52 | 0.52 | 0.55 | 0.55 | 0.55 | 0.55 | 0.55 | 0.58 | 0.58 | 0.58 | 0.58 | 0.58 | 0.61 | 0.61 | 0.61 | 0.61 | 0.61 |

Manufacturer reserves the right to change, at any time, specifications and designs without notice and without obligations.

# COOLING PERFORMANCE DATA (HEAT PUMP) (CONTINUED)

| AIRFLOW (CFM) | OUTDOOR DB °F (°C) | ID WB °F (°C) | 60.8°F(16.0°C) | | | | | 64.4°F(18.0°C) | | | | | 67°F(19.4°C) | | | | | 71.6°F(22.0°C) | | | | |
|---|---|---|---|---|---|---|---|---|---|---|---|---|---|---|---|---|---|---|---|---|---|---|
| | | ID DB °F (°C) | 73.4°F (23.0°C) | 77.0°F (25.0°C) | 80.0°F (26.7°C) | 80.6°F (27.0°C) | 84.2°F (29.0°C) | 73.4°F (23.0°C) | 77.0°F (25.0°C) | 80.0°F (26.7°C) | 80.6°F (27.0°C) | 84.2°F (29.0°C) | 73.4°F (23.0°C) | 77.0°F (25.0°C) | 80.0°F (26.7°C) | 80.6°F (27.0°C) | 84.2°F (29.0°C) | 73.4°F (23.0°C) | 77.0°F (25.0°C) | 80.0°F (26.7°C) | 80.6°F (27.0°C) | 84.2°F (29.0°C) |
| 241 | 59°F (15.0°C) | TC | 10128 | 10141 | 10152 | 10153 | 10167 | 10738 | 10751 | 10762 | 10764 | 10776 | 11380 | 11394 | 11407 | 11409 | 11422 | 12065 | 12078 | 12092 | 12094 | 12109 |
| | | S/T | 0.47 | 0.55 | 0.63 | 0.63 | 0.72 | 0.50 | 0.59 | 0.67 | 0.67 | 0.76 | 0.53 | 0.62 | 0.71 | 0.71 | 0.81 | 0.56 | 0.66 | 0.75 | 0.75 | 0.86 |
| | | PI | 0.56 | 0.56 | 0.56 | 0.56 | 0.56 | 0.59 | 0.59 | 0.59 | 0.59 | 0.59 | 0.63 | 0.63 | 0.63 | 0.63 | 0.63 | 0.66 | 0.66 | 0.67 | 0.67 | 0.67 |
| | 68°F (20.0°C) | TC | 9879 | 9892 | 9903 | 9903 | 9916 | 10474 | 10486 | 10497 | 10499 | 10511 | 11100 | 11114 | 11127 | 11129 | 11141 | 11769 | 11781 | 11794 | 11796 | 11811 |
| | | S/T | 0.49 | 0.57 | 0.65 | 0.65 | 0.74 | 0.51 | 0.60 | 0.69 | 0.69 | 0.78 | 0.55 | 0.64 | 0.73 | 0.73 | 0.83 | 0.58 | 0.68 | 0.77 | 0.77 | 0.88 |
| | | PI | 0.60 | 0.60 | 0.60 | 0.60 | 0.60 | 0.64 | 0.64 | 0.64 | 0.64 | 0.64 | 0.68 | 0.68 | 0.68 | 0.68 | 0.68 | 0.72 | 0.72 | 0.72 | 0.72 | 0.72 |
| | 77°F (25.0°C) | TC | 9629 | 9642 | 9653 | 9653 | 9666 | 10210 | 10222 | 10232 | 10234 | 10246 | 10820 | 10834 | 10846 | 10848 | 10860 | 11472 | 11484 | 11497 | 11498 | 11513 |
| | | S/T | 0.49 | 0.58 | 0.66 | 0.66 | 0.75 | 0.52 | 0.61 | 0.69 | 0.69 | 0.79 | 0.55 | 0.65 | 0.74 | 0.74 | 0.84 | 0.59 | 0.69 | 0.78 | 0.78 | 0.89 |
| | | PI | 0.64 | 0.65 | 0.65 | 0.65 | 0.65 | 0.68 | 0.68 | 0.68 | 0.68 | 0.69 | 0.72 | 0.72 | 0.73 | 0.73 | 0.73 | 0.77 | 0.77 | 0.77 | 0.77 | 0.77 |
| | 82°F (27.8°C) | TC | 9668 | 9681 | 9691 | 9692 | 9705 | 10250 | 10262 | 10273 | 10275 | 10287 | 10863 | 10877 | 10889 | 10891 | 10903 | 11517 | 11530 | 11542 | 11544 | 11558 |
| | | S/T | 0.50 | 0.58 | 0.66 | 0.66 | 0.76 | 0.53 | 0.62 | 0.70 | 0.70 | 0.80 | 0.56 | 0.66 | 0.75 | 0.75 | 0.85 | 0.59 | 0.70 | 0.79 | 0.79 | 0.90 |
| | | PI | 0.72 | 0.72 | 0.72 | 0.72 | 0.72 | 0.76 | 0.76 | 0.76 | 0.76 | 0.77 | 0.81 | 0.81 | 0.81 | 0.81 | 0.81 | 0.86 | 0.86 | 0.86 | 0.86 | 0.86 |
| | 86°F (30.0°C) | TC | 9921 | 9935 | 9945 | 9946 | 9959 | 10519 | 10532 | 10542 | 10544 | 10557 | 11148 | 11162 | 11174 | 11177 | 11189 | 11819 | 11832 | 11845 | 11847 | 11862 |
| | | S/T | 0.50 | 0.59 | 0.67 | 0.67 | 0.77 | 0.53 | 0.63 | 0.71 | 0.71 | 0.81 | 0.57 | 0.66 | 0.76 | 0.76 | 0.86 | 0.60 | 0.70 | 0.80 | 0.80 | 0.91 |
| | | PI | 0.84 | 0.85 | 0.85 | 0.85 | 0.85 | 0.90 | 0.90 | 0.90 | 0.90 | 0.90 | 0.95 | 0.95 | 0.95 | 0.95 | 0.95 | 1.01 | 1.01 | 1.01 | 1.01 | 1.01 |
| | 95°F (35.0°C) | TC | 10492 | 10506 | 10517 | 10517 | 10532 | 11124 | 11137 | 11148 | 11150 | 11163 | 11788 | 11804 | 11817 | 11819 | 11832 | 12499 | 12512 | 12526 | 12528 | 12543 |
| | | S/T | 0.50 | 0.59 | 0.67 | 0.67 | 0.77 | 0.53 | 0.63 | 0.71 | 0.71 | 0.81 | 0.57 | 0.66 | 0.76 | 0.76 | 0.86 | 0.60 | 0.70 | 0.80 | 0.80 | 0.91 |
| | | PI | 1.12 | 1.13 | 1.13 | 1.13 | 1.13 | 1.19 | 1.19 | 1.20 | 1.20 | 1.20 | 1.26 | 1.27 | 1.27 | 1.27 | 1.27 | 1.34 | 1.34 | 1.34 | 1.34 | 1.35 |
| | 104°F (40.0°C) | TC | 9648 | 9661 | 9671 | 9672 | 9685 | 10229 | 10241 | 10251 | 10253 | 10266 | 10840 | 10854 | 10866 | 10868 | 10881 | 11493 | 11506 | 11518 | 11520 | 11535 |
| | | S/T | 0.52 | 0.61 | 0.69 | 0.69 | 0.79 | 0.55 | 0.64 | 0.73 | 0.73 | 0.83 | 0.58 | 0.68 | 0.77 | 0.77 | 0.88 | 0.62 | 0.72 | 0.82 | 0.82 | 0.94 |
| | | PI | 1.12 | 1.12 | 1.12 | 1.12 | 1.12 | 1.18 | 1.18 | 1.19 | 1.19 | 1.19 | 1.25 | 1.26 | 1.26 | 1.26 | 1.26 | 1.33 | 1.33 | 1.33 | 1.33 | 1.33 |
| | 110°F (43.0°C) | TC | 9141 | 9154 | 9164 | 9164 | 9176 | 9692 | 9704 | 9713 | 9715 | 9727 | 10271 | 10285 | 10296 | 10298 | 10310 | 10890 | 10902 | 10914 | 10916 | 10929 |
| | | S/T | 0.54 | 0.63 | 0.71 | 0.71 | 0.81 | 0.57 | 0.67 | 0.76 | 0.76 | 0.86 | 0.60 | 0.71 | 0.80 | 0.80 | 0.91 | 0.64 | 0.75 | 0.85 | 0.85 | 0.97 |
| | | PI | 1.11 | 1.11 | 1.11 | 1.11 | 1.11 | 1.18 | 1.18 | 1.18 | 1.18 | 1.18 | 1.25 | 1.25 | 1.25 | 1.25 | 1.25 | 1.32 | 1.32 | 1.33 | 1.33 | 1.33 |
| | 115°F (46.0°C) | TC | 8053 | 8064 | 8072 | 8073 | 8084 | 8538 | 8548 | 8557 | 8558 | 8568 | 9048 | 9060 | 9070 | 9072 | 9082 | 9593 | 9604 | 9614 | 9616 | 9628 |
| | | S/T | 0.54 | 0.64 | 0.72 | 0.72 | 0.82 | 0.57 | 0.67 | 0.77 | 0.77 | 0.87 | 0.61 | 0.71 | 0.81 | 0.81 | 0.93 | 0.65 | 0.76 | 0.86 | 0.86 | 0.98 |
| | | PI | 0.98 | 0.98 | 0.98 | 0.98 | 0.99 | 1.04 | 1.04 | 1.04 | 1.04 | 1.04 | 1.10 | 1.10 | 1.11 | 1.11 | 1.11 | 1.17 | 1.17 | 1.17 | 1.17 | 1.17 |
| | 122°F (50.0°C) | TC | 6601 | 6610 | 6617 | 6617 | 6626 | 6999 | 7007 | 7014 | 7016 | 7024 | 7417 | 7427 | 7435 | 7436 | 7445 | 7864 | 7873 | 7881 | 7882 | 7892 |
| | | S/T | 0.55 | 0.65 | 0.74 | 0.74 | 0.84 | 0.59 | 0.69 | 0.78 | 0.78 | 0.89 | 0.62 | 0.73 | 0.83 | 0.83 | 0.95 | 0.66 | 0.78 | 0.88 | 0.88 | 1.00 |
| | | PI | 0.81 | 0.81 | 0.81 | 0.81 | 0.81 | 0.86 | 0.86 | 0.86 | 0.86 | 0.86 | 0.91 | 0.91 | 0.91 | 0.91 | 0.91 | 0.97 | 0.97 | 0.97 | 0.97 | 0.97 |

Manufacturer reserves the right to change, at any time, specifications and designs without notice and without obligations.

# COOLING PERFORMANCE DATA (HEAT PUMP) (CONTINUED)

| AIRFLOW (CFM) | OUTDOOR DB °F (°C) | ID WB °F (°C) | 60.8°F(16.0°C) | | | | | 64.4°F(18.0°C) | | | | | 67°F(19.4°C) | | | | | 71.6°F(22.0°C) | | | | |
|---|---|---|---|---|---|---|---|---|---|---|---|---|---|---|---|---|---|---|---|---|---|---|
| | | ID DB °F (°C) | 73.4°F (23.0°C) | 77.0°F (25.0°C) | 80.0°F (26.7°C) | 80.6°F (27.0°C) | 84.2°F (29.0°C) | 73.4°F (23.0°C) | 77.0°F (25.0°C) | 80.0°F (26.7°C) | 80.6°F (27.0°C) | 84.2°F (29.0°C) | 73.4°F (23.0°C) | 77.0°F (25.0°C) | 80.0°F (26.7°C) | 80.6°F (27.0°C) | 84.2°F (29.0°C) | 73.4°F (23.0°C) | 77.0°F (25.0°C) | 80.0°F (26.7°C) | 80.6°F (27.0°C) | 84.2°F (29.0°C) |
| 294 | 5°F (-15.0°C) | TC | 10991 | 11006 | 11018 | 11018 | 11033 | 11654 | 11668 | 11679 | 11681 | 11695 | 12350 | 12366 | 12380 | 12382 | 12396 | 13094 | 13108 | 13123 | 13125 | 13141 |
| | | S/T | 0.47 | 0.55 | 0.63 | 0.63 | 0.72 | 0.50 | 0.59 | 0.67 | 0.67 | 0.76 | 0.53 | 0.62 | 0.71 | 0.71 | 0.81 | 0.56 | 0.66 | 0.75 | 0.75 | 0.85 |
| | | PI | 0.57 | 0.57 | 0.57 | 0.57 | 0.57 | 0.60 | 0.60 | 0.60 | 0.60 | 0.60 | 0.64 | 0.64 | 0.64 | 0.64 | 0.64 | 0.67 | 0.67 | 0.68 | 0.68 | 0.68 |
| | 14°F (-10.0°C) | TC | 11130 | 11145 | 11157 | 11158 | 11173 | 11801 | 11815 | 11827 | 11829 | 11843 | 12506 | 12523 | 12536 | 12539 | 12553 | 13260 | 13274 | 13289 | 13291 | 13307 |
| | | S/T | 0.47 | 0.55 | 0.63 | 0.63 | 0.72 | 0.50 | 0.59 | 0.67 | 0.67 | 0.76 | 0.53 | 0.62 | 0.71 | 0.71 | 0.81 | 0.56 | 0.66 | 0.75 | 0.75 | 0.86 |
| | | PI | 0.53 | 0.53 | 0.53 | 0.53 | 0.54 | 0.57 | 0.57 | 0.57 | 0.57 | 0.57 | 0.60 | 0.60 | 0.60 | 0.60 | 0.60 | 0.64 | 0.64 | 0.64 | 0.64 | 0.64 |
| | 17°F (-8.3°C) | TC | 11177 | 11192 | 11204 | 11204 | 11220 | 11850 | 11864 | 11876 | 11878 | 11893 | 12558 | 12575 | 12589 | 12591 | 12605 | 13315 | 13330 | 13344 | 13346 | 13363 |
| | | S/T | 0.47 | 0.56 | 0.63 | 0.63 | 0.72 | 0.50 | 0.59 | 0.67 | 0.67 | 0.76 | 0.53 | 0.63 | 0.71 | 0.71 | 0.81 | 0.57 | 0.66 | 0.75 | 0.75 | 0.86 |
| | | PI | 0.52 | 0.52 | 0.52 | 0.52 | 0.52 | 0.55 | 0.55 | 0.56 | 0.56 | 0.56 | 0.59 | 0.59 | 0.59 | 0.59 | 0.59 | 0.62 | 0.62 | 0.62 | 0.62 | 0.63 |
| | 23°F (-5.0°C) | TC | 10916 | 10930 | 10942 | 10943 | 10958 | 11574 | 11587 | 11599 | 11601 | 11615 | 12265 | 12281 | 12295 | 12297 | 12311 | 13004 | 13018 | 13032 | 13034 | 13051 |
| | | S/T | 0.48 | 0.56 | 0.64 | 0.64 | 0.72 | 0.51 | 0.59 | 0.67 | 0.67 | 0.77 | 0.54 | 0.63 | 0.71 | 0.71 | 0.81 | 0.57 | 0.67 | 0.76 | 0.76 | 0.86 |
| | | PI | 0.58 | 0.58 | 0.58 | 0.58 | 0.58 | 0.61 | 0.61 | 0.61 | 0.61 | 0.61 | 0.65 | 0.65 | 0.65 | 0.65 | 0.65 | 0.69 | 0.69 | 0.69 | 0.69 | 0.69 |
| | 35°F (1.7°C) | TC | 10394 | 10408 | 10419 | 10419 | 10434 | 11020 | 11033 | 11044 | 11046 | 11059 | 11679 | 11694 | 11707 | 11709 | 11722 | 12382 | 12396 | 12409 | 12411 | 12427 |
| | | S/T | 0.48 | 0.56 | 0.64 | 0.64 | 0.73 | 0.51 | 0.60 | 0.68 | 0.68 | 0.77 | 0.54 | 0.63 | 0.72 | 0.72 | 0.82 | 0.57 | 0.67 | 0.76 | 0.76 | 0.87 |
| | | PI | 0.69 | 0.69 | 0.69 | 0.69 | 0.69 | 0.73 | 0.73 | 0.73 | 0.73 | 0.73 | 0.77 | 0.77 | 0.77 | 0.77 | 0.77 | 0.82 | 0.82 | 0.82 | 0.82 | 0.82 |
| | 41°F (5.0°C) | TC | 10579 | 10593 | 10605 | 10605 | 10620 | 11217 | 11230 | 11241 | 11243 | 11257 | 11887 | 11902 | 11916 | 11918 | 11931 | 12603 | 12617 | 12631 | 12633 | 12648 |
| | | S/T | 0.48 | 0.56 | 0.64 | 0.64 | 0.73 | 0.51 | 0.60 | 0.68 | 0.68 | 0.77 | 0.54 | 0.63 | 0.72 | 0.72 | 0.82 | 0.57 | 0.67 | 0.76 | 0.76 | 0.87 |
| | | PI | 0.60 | 0.60 | 0.60 | 0.60 | 0.60 | 0.64 | 0.64 | 0.64 | 0.64 | 0.64 | 0.67 | 0.68 | 0.68 | 0.68 | 0.68 | 0.71 | 0.72 | 0.72 | 0.72 | 0.72 |
| | 47°F (8.3°C) | TC | 10765 | 10779 | 10791 | 10791 | 10806 | 11413 | 11427 | 11438 | 11441 | 11454 | 12095 | 12111 | 12125 | 12127 | 12140 | 12824 | 12838 | 12852 | 12854 | 12870 |
| | | S/T | 0.48 | 0.57 | 0.64 | 0.64 | 0.73 | 0.51 | 0.60 | 0.68 | 0.68 | 0.78 | 0.54 | 0.63 | 0.72 | 0.72 | 0.82 | 0.57 | 0.67 | 0.76 | 0.76 | 0.87 |
| | | PI | 0.51 | 0.51 | 0.52 | 0.52 | 0.52 | 0.55 | 0.55 | 0.55 | 0.55 | 0.55 | 0.58 | 0.58 | 0.58 | 0.58 | 0.58 | 0.61 | 0.61 | 0.61 | 0.61 | 0.61 |
| | 50°F (10.0°C) | TC | 10679 | 10694 | 10705 | 10706 | 10720 | 11323 | 11336 | 11347 | 11350 | 11363 | 11999 | 12015 | 12028 | 12031 | 12044 | 12722 | 12736 | 12750 | 12752 | 12768 |
| | | S/T | 0.48 | 0.57 | 0.65 | 0.65 | 0.74 | 0.51 | 0.60 | 0.68 | 0.68 | 0.78 | 0.54 | 0.64 | 0.73 | 0.73 | 0.83 | 0.58 | 0.68 | 0.77 | 0.77 | 0.88 |
| | | PI | 0.53 | 0.53 | 0.53 | 0.53 | 0.53 | 0.56 | 0.56 | 0.56 | 0.56 | 0.56 | 0.59 | 0.60 | 0.60 | 0.60 | 0.60 | 0.63 | 0.63 | 0.63 | 0.63 | 0.63 |
| | 59°F (15.0°C) | TC | 10423 | 10437 | 10448 | 10449 | 10463 | 11051 | 11064 | 11075 | 11077 | 11090 | 11711 | 11726 | 11739 | 11742 | 11755 | 12417 | 12430 | 12444 | 12446 | 12461 |
| | | S/T | 0.49 | 0.57 | 0.65 | 0.65 | 0.74 | 0.52 | 0.61 | 0.69 | 0.69 | 0.78 | 0.55 | 0.64 | 0.73 | 0.73 | 0.83 | 0.58 | 0.68 | 0.77 | 0.77 | 0.88 |
| | | PI | 0.57 | 0.57 | 0.58 | 0.58 | 0.58 | 0.61 | 0.61 | 0.61 | 0.61 | 0.61 | 0.64 | 0.65 | 0.65 | 0.65 | 0.65 | 0.68 | 0.68 | 0.68 | 0.69 | 0.69 |
| | 68°F (20.0°C) | TC | 10166 | 10180 | 10191 | 10191 | 10205 | 10779 | 10792 | 10802 | 10805 | 10817 | 11423 | 11438 | 11451 | 11453 | 11466 | 12111 | 12124 | 12138 | 12140 | 12155 |
| | | S/T | 0.50 | 0.59 | 0.67 | 0.67 | 0.76 | 0.53 | 0.62 | 0.71 | 0.71 | 0.80 | 0.56 | 0.66 | 0.75 | 0.75 | 0.85 | 0.59 | 0.70 | 0.79 | 0.79 | 0.90 |
| | | PI | 0.62 | 0.62 | 0.62 | 0.62 | 0.62 | 0.66 | 0.66 | 0.66 | 0.66 | 0.66 | 0.69 | 0.70 | 0.70 | 0.70 | 0.70 | 0.74 | 0.74 | 0.74 | 0.74 | 0.74 |
| | 77°F (25.0°C) | TC | 9910 | 9923 | 9934 | 9934 | 9948 | 10507 | 10520 | 10530 | 10532 | 10545 | 11135 | 11149 | 11162 | 11164 | 11176 | 11806 | 11819 | 11832 | 11833 | 11848 |
| | | S/T | 0.51 | 0.59 | 0.67 | 0.67 | 0.77 | 0.54 | 0.63 | 0.72 | 0.72 | 0.82 | 0.57 | 0.67 | 0.76 | 0.76 | 0.86 | 0.60 | 0.71 | 0.80 | 0.80 | 0.92 |
| | | PI | 0.66 | 0.66 | 0.66 | 0.66 | 0.67 | 0.70 | 0.70 | 0.70 | 0.70 | 0.71 | 0.74 | 0.75 | 0.75 | 0.75 | 0.75 | 0.79 | 0.79 | 0.79 | 0.79 | 0.79 |
| | 82°F (27.8°C) | TC | 9949 | 9963 | 9973 | 9974 | 9987 | 10549 | 10561 | 10572 | 10574 | 10586 | 11179 | 11194 | 11206 | 11208 | 11221 | 11853 | 11866 | 11878 | 11880 | 11895 |
| | | S/T | 0.51 | 0.60 | 0.68 | 0.68 | 0.78 | 0.54 | 0.64 | 0.72 | 0.72 | 0.83 | 0.58 | 0.68 | 0.77 | 0.77 | 0.88 | 0.61 | 0.72 | 0.81 | 0.81 | 0.93 |
| | | PI | 0.74 | 0.74 | 0.74 | 0.74 | 0.74 | 0.79 | 0.79 | 0.79 | 0.79 | 0.79 | 0.83 | 0.83 | 0.83 | 0.83 | 0.83 | 0.88 | 0.88 | 0.88 | 0.88 | 0.89 |
| | 86°F (30.0°C) | TC | 10210 | 10224 | 10235 | 10235 | 10249 | 10825 | 10838 | 10849 | 10851 | 10864 | 11472 | 11487 | 11500 | 11502 | 11515 | 12163 | 12177 | 12190 | 12192 | 12207 |
| | | S/T | 0.52 | 0.61 | 0.69 | 0.69 | 0.79 | 0.55 | 0.65 | 0.73 | 0.73 | 0.84 | 0.58 | 0.68 | 0.78 | 0.78 | 0.89 | 0.62 | 0.73 | 0.82 | 0.82 | 0.94 |
| | | PI | 0.87 | 0.87 | 0.87 | 0.87 | 0.87 | 0.92 | 0.92 | 0.92 | 0.92 | 0.92 | 0.98 | 0.98 | 0.98 | 0.98 | 0.98 | 1.04 | 1.04 | 1.04 | 1.04 | 1.04 |

Manufacturer reserves the right to change, at any time, specifications and designs without notice and without obligations.

# COOLING PERFORMANCE DATA (HEAT PUMP) (CONTINUED)

| AIRFLOW (CFM) | OUTDOOR DB °F (°C) | ID WB °F (°C) | 60.8°F(16.0°C) | | | | | 64.4°F(18.0°C) | | | | | 67°F(19.4°C) | | | | | 71.6°F(22.0°C) | | | | |
|---|---|---|---|---|---|---|---|---|---|---|---|---|---|---|---|---|---|---|---|---|---|---|
| | | ID DB °F (°C) | 73.4°F (23.0°C) | 77.0°F (25.0°C) | 80.0°F (26.7°C) | 80.6°F (27.0°C) | 84.2°F (29.0°C) | 73.4°F (23.0°C) | 77.0°F (25.0°C) | 80.0°F (26.7°C) | 80.6°F (27.0°C) | 84.2°F (29.0°C) | 73.4°F (23.0°C) | 77.0°F (25.0°C) | 80.0°F (26.7°C) | 80.6°F (27.0°C) | 84.2°F (29.0°C) | 73.4°F (23.0°C) | 77.0°F (25.0°C) | 80.0°F (26.7°C) | 80.6°F (27.0°C) | 84.2°F (29.0°C) |
| 294 | 95°F (35.0°C) | TC | 10797 | 10812 | 10823 | 10824 | 10838 | 11448 | 11461 | 11473 | 11475 | 11489 | 12132 | 12147 | 12161 | 12163 | 12177 | 12863 | 12877 | 12891 | 12893 | 12909 |
| | | S/T | 0.52 | 0.61 | 0.69 | 0.69 | 0.79 | 0.55 | 0.65 | 0.73 | 0.73 | 0.84 | 0.58 | 0.68 | 0.78 | 0.78 | 0.89 | 0.62 | 0.73 | 0.82 | 0.82 | 0.94 |
| | | PI | 1.16 | 1.16 | 1.16 | 1.16 | 1.16 | 1.23 | 1.23 | 1.23 | 1.23 | 1.23 | 1.30 | 1.30 | 1.30 | 1.30 | 1.31 | 1.38 | 1.38 | 1.38 | 1.38 | 1.38 |
| | 104°F (40.0°C) | TC | 9929 | 9942 | 9953 | 9953 | 9967 | 10527 | 10540 | 10550 | 10552 | 10565 | 11156 | 11171 | 11183 | 11185 | 11198 | 11828 | 11841 | 11854 | 11856 | 11871 |
| | | S/T | 0.53 | 0.62 | 0.71 | 0.71 | 0.81 | 0.56 | 0.66 | 0.75 | 0.75 | 0.86 | 0.60 | 0.70 | 0.80 | 0.80 | 0.91 | 0.63 | 0.74 | 0.84 | 0.84 | 0.96 |
| | | PI | 1.15 | 1.15 | 1.15 | 1.15 | 1.15 | 1.22 | 1.22 | 1.22 | 1.22 | 1.22 | 1.29 | 1.29 | 1.29 | 1.29 | 1.29 | 1.37 | 1.37 | 1.37 | 1.37 | 1.37 |
| | 110°F (43.0°C) | TC | 9408 | 9420 | 9431 | 9431 | 9444 | 9975 | 9986 | 9996 | 9998 | 10010 | 10571 | 10584 | 10596 | 10598 | 10610 | 11208 | 11220 | 11232 | 11234 | 11248 |
| | | S/T | 0.55 | 0.65 | 0.74 | 0.74 | 0.84 | 0.58 | 0.69 | 0.78 | 0.78 | 0.89 | 0.62 | 0.73 | 0.83 | 0.83 | 0.94 | 0.66 | 0.77 | 0.88 | 0.88 | 1.00 |
| | | PI | 1.14 | 1.14 | 1.15 | 1.15 | 1.15 | 1.21 | 1.21 | 1.21 | 1.21 | 1.22 | 1.28 | 1.29 | 1.29 | 1.29 | 1.29 | 1.36 | 1.36 | 1.36 | 1.36 | 1.37 |
| | 115°F (46.0°C) | TC | 8287 | 8298 | 8307 | 8308 | 8319 | 8787 | 8797 | 8806 | 8808 | 8818 | 9312 | 9324 | 9334 | 9336 | 9346 | 9873 | 9883 | 9894 | 9896 | 9908 |
| | | S/T | 0.56 | 0.65 | 0.74 | 0.74 | 0.85 | 0.59 | 0.69 | 0.79 | 0.79 | 0.90 | 0.63 | 0.74 | 0.84 | 0.84 | 0.95 | 0.66 | 0.78 | 0.89 | 0.89 | 1.00 |
| | | PI | 1.01 | 1.01 | 1.01 | 1.01 | 1.01 | 1.07 | 1.07 | 1.07 | 1.07 | 1.08 | 1.14 | 1.14 | 1.14 | 1.14 | 1.14 | 1.20 | 1.21 | 1.21 | 1.21 | 1.21 |
| | 122°F (50.0°C) | TC | 6793 | 6803 | 6810 | 6810 | 6819 | 7203 | 7211 | 7218 | 7220 | 7228 | 7633 | 7643 | 7652 | 7653 | 7662 | 8093 | 8102 | 8111 | 8112 | 8122 |
| | | S/T | 0.57 | 0.67 | 0.76 | 0.76 | 0.87 | 0.61 | 0.71 | 0.81 | 0.81 | 0.92 | 0.64 | 0.75 | 0.86 | 0.86 | 0.97 | 0.68 | 0.80 | 0.91 | 0.91 | 1.00 |
| | | PI | 0.83 | 0.84 | 0.84 | 0.84 | 0.84 | 0.88 | 0.89 | 0.89 | 0.89 | 0.89 | 0.94 | 0.94 | 0.94 | 0.94 | 0.94 | 0.99 | 1.00 | 1.00 | 1.00 | 1.00 |
| 312 | 5°F (-15.0°C) | TC | 11312 | 11327 | 11339 | 11339 | 11355 | 11993 | 12007 | 12019 | 12022 | 12036 | 12710 | 12726 | 12740 | 12743 | 12757 | 13476 | 13490 | 13505 | 13507 | 13524 |
| | | S/T | 0.49 | 0.57 | 0.65 | 0.65 | 0.74 | 0.51 | 0.60 | 0.69 | 0.69 | 0.78 | 0.55 | 0.64 | 0.73 | 0.73 | 0.83 | 0.58 | 0.68 | 0.77 | 0.77 | 0.88 |
| | | PI | 0.58 | 0.58 | 0.58 | 0.58 | 0.58 | 0.62 | 0.62 | 0.62 | 0.62 | 0.62 | 0.65 | 0.66 | 0.66 | 0.66 | 0.66 | 0.69 | 0.69 | 0.70 | 0.70 | 0.70 |
| | 14°F (-10.0°C) | TC | 11455 | 11470 | 11482 | 11483 | 11498 | 12145 | 12159 | 12171 | 12174 | 12188 | 12871 | 12887 | 12902 | 12904 | 12918 | 13646 | 13661 | 13676 | 13678 | 13695 |
| | | S/T | 0.49 | 0.57 | 0.65 | 0.65 | 0.74 | 0.52 | 0.61 | 0.69 | 0.69 | 0.78 | 0.55 | 0.64 | 0.73 | 0.73 | 0.83 | 0.58 | 0.68 | 0.77 | 0.77 | 0.88 |
| | | PI | 0.55 | 0.55 | 0.55 | 0.55 | 0.55 | 0.58 | 0.58 | 0.58 | 0.58 | 0.58 | 0.62 | 0.62 | 0.62 | 0.62 | 0.62 | 0.65 | 0.65 | 0.66 | 0.66 | 0.66 |
| | 17°F (-8.3°C) | TC | 11502 | 11518 | 11530 | 11531 | 11546 | 12196 | 12210 | 12222 | 12224 | 12239 | 12924 | 12941 | 12955 | 12958 | 12972 | 13703 | 13718 | 13733 | 13735 | 13752 |
| | | S/T | 0.49 | 0.57 | 0.65 | 0.65 | 0.74 | 0.52 | 0.61 | 0.69 | 0.69 | 0.79 | 0.55 | 0.64 | 0.73 | 0.73 | 0.83 | 0.58 | 0.68 | 0.78 | 0.78 | 0.88 |
| | | PI | 0.54 | 0.54 | 0.54 | 0.54 | 0.54 | 0.57 | 0.57 | 0.57 | 0.57 | 0.57 | 0.60 | 0.61 | 0.61 | 0.61 | 0.61 | 0.64 | 0.64 | 0.64 | 0.64 | 0.64 |
| | 23°F (-5.0°C) | TC | 11234 | 11249 | 11261 | 11261 | 11277 | 11911 | 11925 | 11937 | 11939 | 11953 | 12622 | 12639 | 12653 | 12655 | 12669 | 13383 | 13397 | 13412 | 13414 | 13431 |
| | | S/T | 0.49 | 0.58 | 0.65 | 0.65 | 0.75 | 0.52 | 0.61 | 0.69 | 0.69 | 0.79 | 0.55 | 0.65 | 0.74 | 0.74 | 0.84 | 0.58 | 0.69 | 0.78 | 0.78 | 0.89 |
| | | PI | 0.59 | 0.59 | 0.60 | 0.60 | 0.60 | 0.63 | 0.63 | 0.63 | 0.63 | 0.63 | 0.67 | 0.67 | 0.67 | 0.67 | 0.67 | 0.71 | 0.71 | 0.71 | 0.71 | 0.71 |
| | 35°F (1.7°C) | TC | 10697 | 10711 | 10722 | 10723 | 10737 | 11341 | 11355 | 11366 | 11368 | 11382 | 12019 | 12034 | 12048 | 12050 | 12063 | 12743 | 12757 | 12771 | 12773 | 12789 |
| | | S/T | 0.49 | 0.58 | 0.66 | 0.66 | 0.75 | 0.52 | 0.61 | 0.70 | 0.70 | 0.79 | 0.55 | 0.65 | 0.74 | 0.74 | 0.84 | 0.59 | 0.69 | 0.78 | 0.78 | 0.89 |
| | | PI | 0.71 | 0.71 | 0.71 | 0.71 | 0.71 | 0.75 | 0.75 | 0.75 | 0.75 | 0.75 | 0.79 | 0.79 | 0.80 | 0.80 | 0.80 | 0.84 | 0.84 | 0.84 | 0.84 | 0.84 |
| | 41°F (5.0°C) | TC | 10887 | 10902 | 10914 | 10914 | 10929 | 11544 | 11557 | 11569 | 11571 | 11585 | 12233 | 12249 | 12263 | 12265 | 12279 | 12970 | 12984 | 12998 | 13001 | 13017 |
| | | S/T | 0.49 | 0.58 | 0.66 | 0.66 | 0.75 | 0.52 | 0.61 | 0.70 | 0.70 | 0.80 | 0.56 | 0.65 | 0.74 | 0.74 | 0.84 | 0.59 | 0.69 | 0.78 | 0.78 | 0.89 |
| | | PI | 0.62 | 0.62 | 0.62 | 0.62 | 0.62 | 0.65 | 0.66 | 0.66 | 0.66 | 0.66 | 0.69 | 0.69 | 0.70 | 0.70 | 0.70 | 0.74 | 0.74 | 0.74 | 0.74 | 0.74 |
| | 47°F (8.3°C) | TC | 11078 | 11093 | 11105 | 11106 | 11121 | 11746 | 11760 | 11771 | 11774 | 11788 | 12448 | 12464 | 12478 | 12480 | 12494 | 13198 | 13212 | 13226 | 13228 | 13245 |
| | | S/T | 0.50 | 0.58 | 0.66 | 0.66 | 0.75 | 0.53 | 0.62 | 0.70 | 0.70 | 0.80 | 0.56 | 0.65 | 0.74 | 0.74 | 0.85 | 0.59 | 0.69 | 0.79 | 0.79 | 0.90 |
| | | PI | 0.53 | 0.53 | 0.53 | 0.53 | 0.53 | 0.56 | 0.56 | 0.56 | 0.56 | 0.56 | 0.59 | 0.60 | 0.60 | 0.60 | 0.60 | 0.63 | 0.63 | 0.63 | 0.63 | 0.63 |
| | 50°F (10.0°C) | TC | 10990 | 11005 | 11017 | 11017 | 11032 | 11653 | 11666 | 11678 | 11680 | 11694 | 12349 | 12365 | 12379 | 12381 | 12395 | 13093 | 13107 | 13121 | 13123 | 13140 |
| | | S/T | 0.50 | 0.58 | 0.66 | 0.66 | 0.76 | 0.53 | 0.62 | 0.70 | 0.70 | 0.80 | 0.56 | 0.66 | 0.75 | 0.75 | 0.85 | 0.59 | 0.70 | 0.79 | 0.79 | 0.90 |
| | | PI | 0.54 | 0.55 | 0.55 | 0.55 | 0.55 | 0.58 | 0.58 | 0.58 | 0.58 | 0.58 | 0.61 | 0.61 | 0.61 | 0.61 | 0.61 | 0.65 | 0.65 | 0.65 | 0.65 | 0.65 |

Manufacturer reserves the right to change, at any time, specifications and designs without notice and without obligations.

# COOLING PERFORMANCE DATA (HEAT PUMP) (CONTINUED)

| AIRFLOW (CFM) | OUTDOOR DB °F (°C) | ID WB °F (°C) | 60.8°F(16.0°C) | | | | | 64.4°F(18.0°C) | | | | | 67°F(19.4°C) | | | | | 71.6°F(22.0°C) | | | | |
|---|---|---|---|---|---|---|---|---|---|---|---|---|---|---|---|---|---|---|---|---|---|---|
| | | ID DB °F (°C) | 73.4°F (23.0°C) | 77.0°F (25.0°C) | 80.0°F (26.7°C) | 80.6°F (27.0°C) | 84.2°F (29.0°C) | 73.4°F (23.0°C) | 77.0°F (25.0°C) | 80.0°F (26.7°C) | 80.6°F (27.0°C) | 84.2°F (29.0°C) | 73.4°F (23.0°C) | 77.0°F (25.0°C) | 80.0°F (26.7°C) | 80.6°F (27.0°C) | 84.2°F (29.0°C) | 73.4°F (23.0°C) | 77.0°F (25.0°C) | 80.0°F (26.7°C) | 80.6°F (27.0°C) | 84.2°F (29.0°C) |
| 312 | 59°F (15.0°C) | TC | 10726 | 10741 | 10752 | 10753 | 10767 | 11373 | 11386 | 11398 | 11400 | 11413 | 12052 | 12068 | 12081 | 12084 | 12097 | 12778 | 12792 | 12806 | 12808 | 12824 |
| | | S/T | 0.50 | 0.59 | 0.67 | 0.67 | 0.76 | 0.53 | 0.62 | 0.71 | 0.71 | 0.81 | 0.56 | 0.66 | 0.75 | 0.75 | 0.86 | 0.60 | 0.70 | 0.80 | 0.80 | 0.91 |
| | | PI | 0.59 | 0.59 | 0.59 | 0.59 | 0.59 | 0.63 | 0.63 | 0.63 | 0.63 | 0.63 | 0.66 | 0.66 | 0.66 | 0.67 | 0.67 | 0.70 | 0.70 | 0.70 | 0.70 | 0.71 |
| | 68°F (20.0°C) | TC | 10462 | 10477 | 10488 | 10488 | 10502 | 11093 | 11106 | 11117 | 11119 | 11133 | 11756 | 11771 | 11784 | 11786 | 11799 | 12464 | 12478 | 12491 | 12493 | 12509 |
| | | S/T | 0.51 | 0.60 | 0.69 | 0.69 | 0.78 | 0.54 | 0.64 | 0.73 | 0.73 | 0.83 | 0.58 | 0.68 | 0.77 | 0.77 | 0.88 | 0.61 | 0.72 | 0.82 | 0.82 | 0.93 |
| | | PI | 0.64 | 0.64 | 0.64 | 0.64 | 0.64 | 0.67 | 0.68 | 0.68 | 0.68 | 0.68 | 0.71 | 0.72 | 0.72 | 0.72 | 0.72 | 0.76 | 0.76 | 0.76 | 0.76 | 0.76 |
| | 77°F (25.0°C) | TC | 10199 | 10212 | 10223 | 10224 | 10238 | 10813 | 10826 | 10837 | 10839 | 10852 | 11459 | 11474 | 11487 | 11489 | 11502 | 12150 | 12163 | 12176 | 12178 | 12193 |
| | | S/T | 0.52 | 0.61 | 0.69 | 0.69 | 0.79 | 0.55 | 0.65 | 0.74 | 0.74 | 0.84 | 0.59 | 0.69 | 0.78 | 0.78 | 0.89 | 0.62 | 0.73 | 0.83 | 0.83 | 0.94 |
| | | PI | 0.68 | 0.68 | 0.68 | 0.68 | 0.68 | 0.72 | 0.72 | 0.72 | 0.73 | 0.73 | 0.77 | 0.77 | 0.77 | 0.77 | 0.77 | 0.81 | 0.81 | 0.81 | 0.81 | 0.82 |
| | 82°F (27.8°C) | TC | 10239 | 10253 | 10264 | 10264 | 10278 | 10856 | 10869 | 10880 | 10882 | 10895 | 11505 | 11520 | 11532 | 11535 | 11548 | 12198 | 12211 | 12224 | 12226 | 12242 |
| | | S/T | 0.53 | 0.62 | 0.70 | 0.70 | 0.80 | 0.56 | 0.66 | 0.75 | 0.75 | 0.85 | 0.59 | 0.70 | 0.79 | 0.79 | 0.90 | 0.63 | 0.74 | 0.84 | 0.84 | 0.95 |
| | | PI | 0.76 | 0.76 | 0.76 | 0.76 | 0.76 | 0.81 | 0.81 | 0.81 | 0.81 | 0.81 | 0.86 | 0.86 | 0.86 | 0.86 | 0.86 | 0.91 | 0.91 | 0.91 | 0.91 | 0.91 |
| | 86°F (30.0°C) | TC | 10508 | 10522 | 10533 | 10533 | 10548 | 11141 | 11154 | 11165 | 11167 | 11180 | 11806 | 11822 | 11835 | 11837 | 11850 | 12518 | 12531 | 12545 | 12547 | 12563 |
| | | S/T | 0.53 | 0.63 | 0.71 | 0.71 | 0.81 | 0.57 | 0.66 | 0.75 | 0.75 | 0.86 | 0.60 | 0.70 | 0.80 | 0.80 | 0.91 | 0.64 | 0.75 | 0.85 | 0.85 | 0.97 |
| | | PI | 0.89 | 0.90 | 0.90 | 0.90 | 0.90 | 0.95 | 0.95 | 0.95 | 0.95 | 0.95 | 1.00 | 1.01 | 1.01 | 1.01 | 1.01 | 1.07 | 1.07 | 1.07 | 1.07 | 1.07 |
| | 95°F (35.0°C) | TC | 11112 | 11127 | 11138 | 11139 | 11154 | 11781 | 11795 | 11807 | 11809 | 11823 | 12485 | 12501 | 12515 | 12518 | 12532 | 13237 | 13252 | 13266 | 13268 | 13285 |
| | | S/T | 0.53 | 0.63 | 0.71 | 0.71 | 0.81 | 0.57 | 0.66 | 0.75 | 0.75 | 0.86 | 0.60 | 0.70 | 0.80 | 0.80 | 0.91 | 0.64 | 0.75 | 0.85 | 0.85 | 0.97 |
| | | PI | 1.19 | 1.19 | 1.19 | 1.19 | 1.20 | 1.26 | 1.26 | 1.27 | 1.27 | 1.27 | 1.34 | 1.34 | 1.34 | 1.34 | 1.34 | 1.42 | 1.42 | 1.42 | 1.42 | 1.42 |
| | 104°F (40.0°C) | TC | 10218 | 10232 | 10243 | 10243 | 10257 | 10834 | 10847 | 10857 | 10859 | 10872 | 11481 | 11496 | 11509 | 11511 | 11524 | 12173 | 12186 | 12199 | 12201 | 12216 |
| | | S/T | 0.55 | 0.64 | 0.73 | 0.73 | 0.83 | 0.58 | 0.68 | 0.77 | 0.77 | 0.88 | 0.62 | 0.72 | 0.82 | 0.82 | 0.93 | 0.65 | 0.76 | 0.87 | 0.87 | 0.99 |
| | | PI | 1.18 | 1.18 | 1.18 | 1.18 | 1.19 | 1.25 | 1.25 | 1.26 | 1.26 | 1.26 | 1.33 | 1.33 | 1.33 | 1.33 | 1.33 | 1.41 | 1.41 | 1.41 | 1.41 | 1.41 |
| | 110°F (43.0°C) | TC | 9682 | 9695 | 9705 | 9706 | 9719 | 10265 | 10277 | 10288 | 10290 | 10302 | 10878 | 10893 | 10905 | 10907 | 10919 | 11534 | 11546 | 11559 | 11561 | 11575 |
| | | S/T | 0.57 | 0.67 | 0.76 | 0.76 | 0.86 | 0.60 | 0.71 | 0.80 | 0.80 | 0.91 | 0.64 | 0.75 | 0.85 | 0.85 | 0.97 | 0.68 | 0.79 | 0.90 | 0.90 | 1.00 |
| | | PI | 1.18 | 1.18 | 1.18 | 1.18 | 1.18 | 1.25 | 1.25 | 1.25 | 1.25 | 1.25 | 1.32 | 1.32 | 1.32 | 1.32 | 1.33 | 1.40 | 1.40 | 1.40 | 1.40 | 1.41 |
| | 115°F (46.0°C) | TC | 8529 | 8540 | 8549 | 8550 | 8561 | 9043 | 9053 | 9062 | 9064 | 9075 | 9583 | 9595 | 9606 | 9608 | 9619 | 10160 | 10171 | 10182 | 10184 | 10197 |
| | | S/T | 0.57 | 0.67 | 0.77 | 0.77 | 0.87 | 0.61 | 0.71 | 0.81 | 0.81 | 0.92 | 0.65 | 0.76 | 0.86 | 0.86 | 0.98 | 0.68 | 0.80 | 0.91 | 0.91 | 1.00 |
| | | PI | 1.04 | 1.04 | 1.04 | 1.04 | 1.04 | 1.10 | 1.10 | 1.10 | 1.11 | 1.11 | 1.17 | 1.17 | 1.17 | 1.17 | 1.17 | 1.24 | 1.24 | 1.24 | 1.24 | 1.24 |
| | 122°F (50.0°C) | TC | 6991 | 7001 | 7008 | 7009 | 7018 | 7413 | 7421 | 7429 | 7430 | 7439 | 7855 | 7866 | 7874 | 7876 | 7885 | 8329 | 8338 | 8347 | 8348 | 8359 |
| | | S/T | 0.59 | 0.69 | 0.78 | 0.78 | 0.89 | 0.62 | 0.73 | 0.83 | 0.83 | 0.95 | 0.66 | 0.77 | 0.88 | 0.88 | 1.00 | 0.70 | 0.82 | 0.93 | 0.93 | 1.00 |
| | | PI | 0.86 | 0.86 | 0.86 | 0.86 | 0.86 | 0.91 | 0.91 | 0.91 | 0.91 | 0.91 | 0.97 | 0.97 | 0.97 | 0.97 | 0.97 | 1.02 | 1.02 | 1.03 | 1.03 | 1.03 |

Manufacturer reserves the right to change, at any time, specifications and designs without notice and without obligations.

# COOLING PERFORMANCE DATA (HEAT PUMP) (CONTINUED)

| AIRFLOW (CFM) | OUTDOOR DB °F (°C) | ID WB °F (°C) | 60.8°F(16.0°C) | | | | | 64.4°F(18.0°C) | | | | | 67°F(19.4°C) | | | | | 71.6°F(22.0°C) | | | | |
|---|---|---|---|---|---|---|---|---|---|---|---|---|---|---|---|---|---|---|---|---|---|---|
| | | ID DB °F (°C) | 73.4°F (23.0°C) | 77.0°F (25.0°C) | 80.0°F (26.7°C) | 80.6°F (27.0°C) | 84.2°F (29.0°C) | 73.4°F (23.0°C) | 77.0°F (25.0°C) | 80.0°F (26.7°C) | 80.6°F (27.0°C) | 84.2°F (29.0°C) | 73.4°F (23.0°C) | 77.0°F (25.0°C) | 80.0°F (26.7°C) | 80.6°F (27.0°C) | 84.2°F (29.0°C) | 73.4°F (23.0°C) | 77.0°F (25.0°C) | 80.0°F (26.7°C) | 80.6°F (27.0°C) | 84.2°F (29.0°C) |
| 12k | | | | | | | | | | | | | | | | | | | | | | |
| 176 | 5°F (-15.0°C) | TC | 10378 | 10392 | 10403 | 10404 | 10418 | 11003 | 11016 | 11027 | 11030 | 11043 | 11661 | 11676 | 11689 | 11691 | 11704 | 12363 | 12377 | 12390 | 12392 | 12408 |
| | | S/T | 0.45 | 0.52 | 0.59 | 0.59 | 0.68 | 0.47 | 0.55 | 0.63 | 0.63 | 0.72 | 0.50 | 0.59 | 0.67 | 0.67 | 0.76 | 0.53 | 0.62 | 0.71 | 0.71 | 0.81 |
| | | PI | 0.53 | 0.54 | 0.54 | 0.54 | 0.54 | 0.57 | 0.57 | 0.57 | 0.57 | 0.57 | 0.60 | 0.60 | 0.60 | 0.60 | 0.60 | 0.64 | 0.64 | 0.64 | 0.64 | 0.64 |
| | 14°F (-10.0°C) | TC | 10509 | 10523 | 10535 | 10535 | 10549 | 11143 | 11156 | 11167 | 11169 | 11182 | 11808 | 11824 | 11837 | 11839 | 11852 | 12520 | 12533 | 12547 | 12549 | 12565 |
| | | S/T | 0.45 | 0.52 | 0.60 | 0.60 | 0.68 | 0.47 | 0.56 | 0.63 | 0.63 | 0.72 | 0.50 | 0.59 | 0.67 | 0.67 | 0.76 | 0.53 | 0.62 | 0.71 | 0.71 | 0.81 |
| | | PI | 0.50 | 0.50 | 0.51 | 0.51 | 0.51 | 0.53 | 0.53 | 0.54 | 0.54 | 0.54 | 0.57 | 0.57 | 0.57 | 0.57 | 0.57 | 0.60 | 0.60 | 0.60 | 0.60 | 0.60 |
| | 17°F (-8.3°C) | TC | 10553 | 10567 | 10579 | 10579 | 10593 | 11189 | 11202 | 11213 | 11216 | 11229 | 11858 | 11873 | 11886 | 11888 | 11902 | 12572 | 12586 | 12599 | 12601 | 12617 |
| | | S/T | 0.45 | 0.53 | 0.60 | 0.60 | 0.68 | 0.47 | 0.56 | 0.63 | 0.63 | 0.72 | 0.50 | 0.59 | 0.67 | 0.67 | 0.77 | 0.53 | 0.63 | 0.71 | 0.71 | 0.81 |
| | | PI | 0.49 | 0.49 | 0.49 | 0.49 | 0.50 | 0.52 | 0.52 | 0.52 | 0.52 | 0.53 | 0.55 | 0.56 | 0.56 | 0.56 | 0.56 | 0.59 | 0.59 | 0.59 | 0.59 | 0.59 |
| | 23°F (-5.0°C) | TC | 10307 | 10321 | 10332 | 10332 | 10346 | 10928 | 10941 | 10952 | 10954 | 10967 | 11581 | 11596 | 11609 | 11611 | 11624 | 12278 | 12292 | 12305 | 12307 | 12322 |
| | | S/T | 0.45 | 0.53 | 0.60 | 0.60 | 0.68 | 0.48 | 0.56 | 0.64 | 0.64 | 0.73 | 0.51 | 0.59 | 0.67 | 0.67 | 0.77 | 0.54 | 0.63 | 0.71 | 0.71 | 0.82 |
| | | PI | 0.54 | 0.55 | 0.55 | 0.55 | 0.55 | 0.58 | 0.58 | 0.58 | 0.58 | 0.58 | 0.61 | 0.61 | 0.61 | 0.61 | 0.61 | 0.65 | 0.65 | 0.65 | 0.65 | 0.65 |
| | 35°F (1.7°C) | TC | 9814 | 9827 | 9838 | 9838 | 9851 | 10405 | 10418 | 10428 | 10430 | 10442 | 11027 | 11041 | 11054 | 11056 | 11068 | 11691 | 11704 | 11717 | 11719 | 11733 |
| | | S/T | 0.45 | 0.53 | 0.60 | 0.60 | 0.69 | 0.48 | 0.56 | 0.64 | 0.64 | 0.73 | 0.51 | 0.60 | 0.68 | 0.68 | 0.77 | 0.54 | 0.63 | 0.72 | 0.72 | 0.82 |
| | | PI | 0.65 | 0.65 | 0.65 | 0.65 | 0.65 | 0.69 | 0.69 | 0.69 | 0.69 | 0.69 | 0.73 | 0.73 | 0.73 | 0.73 | 0.73 | 0.77 | 0.77 | 0.77 | 0.77 | 0.77 |
| | 41°F (5.0°C) | TC | 9989 | 10002 | 10013 | 10014 | 10027 | 10591 | 10603 | 10614 | 10616 | 10629 | 11224 | 11238 | 11251 | 11253 | 11265 | 11900 | 11913 | 11926 | 11928 | 11942 |
| | | S/T | 0.45 | 0.53 | 0.60 | 0.60 | 0.69 | 0.48 | 0.56 | 0.64 | 0.64 | 0.73 | 0.51 | 0.60 | 0.68 | 0.68 | 0.77 | 0.54 | 0.63 | 0.72 | 0.72 | 0.82 |
| | | PI | 0.57 | 0.57 | 0.57 | 0.57 | 0.57 | 0.60 | 0.60 | 0.60 | 0.60 | 0.60 | 0.64 | 0.64 | 0.64 | 0.64 | 0.64 | 0.67 | 0.68 | 0.68 | 0.68 | 0.68 |
| | 47°F (8.3°C) | TC | 10164 | 10178 | 10189 | 10189 | 10203 | 10777 | 10789 | 10800 | 10802 | 10815 | 11420 | 11435 | 11448 | 11450 | 11463 | 12108 | 12122 | 12135 | 12137 | 12152 |
| | | S/T | 0.45 | 0.53 | 0.61 | 0.61 | 0.69 | 0.48 | 0.57 | 0.64 | 0.64 | 0.73 | 0.51 | 0.60 | 0.68 | 0.68 | 0.78 | 0.54 | 0.64 | 0.72 | 0.72 | 0.82 |
| | | PI | 0.49 | 0.49 | 0.49 | 0.49 | 0.49 | 0.51 | 0.52 | 0.52 | 0.52 | 0.52 | 0.55 | 0.55 | 0.55 | 0.55 | 0.55 | 0.58 | 0.58 | 0.58 | 0.58 | 0.58 |
| | 50°F (10.0°C) | TC | 10083 | 10097 | 10108 | 10108 | 10122 | 10691 | 10704 | 10714 | 10716 | 10729 | 11330 | 11344 | 11357 | 11359 | 11372 | 12012 | 12025 | 12038 | 12040 | 12055 |
| | | S/T | 0.46 | 0.54 | 0.61 | 0.61 | 0.69 | 0.48 | 0.57 | 0.65 | 0.65 | 0.74 | 0.51 | 0.60 | 0.68 | 0.68 | 0.78 | 0.54 | 0.64 | 0.73 | 0.73 | 0.83 |
| | | PI | 0.50 | 0.50 | 0.50 | 0.50 | 0.50 | 0.53 | 0.53 | 0.53 | 0.53 | 0.53 | 0.56 | 0.56 | 0.56 | 0.56 | 0.56 | 0.60 | 0.60 | 0.60 | 0.60 | 0.60 |
| | 59°F (15.0°C) | TC | 9841 | 9854 | 9865 | 9865 | 9879 | 10434 | 10447 | 10457 | 10459 | 10471 | 11058 | 11072 | 11084 | 11086 | 11099 | 11724 | 11737 | 11749 | 11751 | 11766 |
| | | S/T | 0.46 | 0.54 | 0.61 | 0.61 | 0.70 | 0.49 | 0.57 | 0.65 | 0.65 | 0.74 | 0.52 | 0.61 | 0.69 | 0.69 | 0.78 | 0.55 | 0.64 | 0.73 | 0.73 | 0.83 |
| | | PI | 0.54 | 0.54 | 0.54 | 0.54 | 0.54 | 0.57 | 0.57 | 0.58 | 0.58 | 0.58 | 0.61 | 0.61 | 0.61 | 0.61 | 0.61 | 0.65 | 0.65 | 0.65 | 0.65 | 0.65 |
| | 68°F (20.0°C) | TC | 9599 | 9612 | 9622 | 9623 | 9636 | 10178 | 10190 | 10200 | 10202 | 10214 | 10786 | 10800 | 10812 | 10814 | 10826 | 11435 | 11448 | 11460 | 11462 | 11476 |
| | | S/T | 0.47 | 0.55 | 0.63 | 0.63 | 0.72 | 0.50 | 0.59 | 0.67 | 0.67 | 0.76 | 0.53 | 0.62 | 0.71 | 0.71 | 0.81 | 0.56 | 0.66 | 0.75 | 0.75 | 0.85 |
| | | PI | 0.58 | 0.58 | 0.59 | 0.59 | 0.59 | 0.62 | 0.62 | 0.62 | 0.62 | 0.62 | 0.66 | 0.66 | 0.66 | 0.66 | 0.66 | 0.70 | 0.70 | 0.70 | 0.70 | 0.70 |
| | 77°F (25.0°C) | TC | 9357 | 9370 | 9380 | 9380 | 9393 | 9921 | 9933 | 9942 | 9944 | 9956 | 10514 | 10527 | 10539 | 10541 | 10553 | 11147 | 11159 | 11171 | 11173 | 11187 |
| | | S/T | 0.48 | 0.56 | 0.64 | 0.64 | 0.73 | 0.51 | 0.59 | 0.68 | 0.68 | 0.77 | 0.54 | 0.63 | 0.72 | 0.72 | 0.82 | 0.57 | 0.67 | 0.76 | 0.76 | 0.86 |
| | | PI | 0.63 | 0.63 | 0.63 | 0.63 | 0.63 | 0.66 | 0.66 | 0.67 | 0.67 | 0.67 | 0.70 | 0.70 | 0.71 | 0.71 | 0.71 | 0.75 | 0.75 | 0.75 | 0.75 | 0.75 |
| | 82°F (27.8°C) | TC | 9394 | 9407 | 9417 | 9417 | 9430 | 9960 | 9972 | 9982 | 9984 | 9996 | 10555 | 10569 | 10581 | 10583 | 10595 | 11191 | 11203 | 11216 | 11217 | 11231 |
| | | S/T | 0.48 | 0.57 | 0.65 | 0.65 | 0.74 | 0.51 | 0.60 | 0.68 | 0.68 | 0.78 | 0.54 | 0.64 | 0.72 | 0.72 | 0.83 | 0.58 | 0.68 | 0.77 | 0.77 | 0.88 |
| | | PI | 0.70 | 0.70 | 0.70 | 0.70 | 0.70 | 0.74 | 0.74 | 0.74 | 0.74 | 0.74 | 0.79 | 0.79 | 0.79 | 0.79 | 0.79 | 0.83 | 0.83 | 0.83 | 0.83 | 0.84 |
| | 86°F (30.0°C) | TC | 9640 | 9653 | 9664 | 9664 | 9677 | 10221 | 10233 | 10244 | 10246 | 10258 | 10832 | 10846 | 10858 | 10860 | 10872 | 11485 | 11497 | 11510 | 11511 | 11526 |
| | | S/T | 0.49 | 0.57 | 0.65 | 0.65 | 0.74 | 0.52 | 0.61 | 0.69 | 0.69 | 0.79 | 0.55 | 0.65 | 0.73 | 0.73 | 0.84 | 0.58 | 0.68 | 0.78 | 0.78 | 0.89 |
| | | PI | 0.82 | 0.82 | 0.82 | 0.82 | 0.82 | 0.87 | 0.87 | 0.87 | 0.87 | 0.87 | 0.92 | 0.92 | 0.92 | 0.92 | 0.93 | 0.98 | 0.98 | 0.98 | 0.98 | 0.98 |

Manufacturer reserves the right to change, at any time, specifications and designs without notice and without obligations.

# COOLING PERFORMANCE DATA (HEAT PUMP) (CONTINUED)

| AIRFLOW (CFM) | OUTDOOR DB °F (°C) | ID WB °F (°C) | 60.8°F(16.0°C) | | | | | 64.4°F(18.0°C) | | | | | 67°F(19.4°C) | | | | | 71.6°F(22.0°C) | | | | |
|---|---|---|---|---|---|---|---|---|---|---|---|---|---|---|---|---|---|---|---|---|---|---|
| | | ID DB °F (°C) | 73.4°F (23.0°C) | 77.0°F (25.0°C) | 80.0°F (26.7°C) | 80.6°F (27.0°C) | 84.2°F (29.0°C) | 73.4°F (23.0°C) | 77.0°F (25.0°C) | 80.0°F (26.7°C) | 80.6°F (27.0°C) | 84.2°F (29.0°C) | 73.4°F (23.0°C) | 77.0°F (25.0°C) | 80.0°F (26.7°C) | 80.6°F (27.0°C) | 84.2°F (29.0°C) | 73.4°F (23.0°C) | 77.0°F (25.0°C) | 80.0°F (26.7°C) | 80.6°F (27.0°C) | 84.2°F (29.0°C) |
| 176 | 95°F (35.0°C) | TC | 10195 | 10208 | 10219 | 10220 | 10234 | 10809 | 10822 | 10832 | 10835 | 10847 | 11455 | 11470 | 11482 | 11485 | 11497 | 12145 | 12158 | 12171 | 12173 | 12188 |
| | | S/T | 0.49 | 0.57 | 0.65 | 0.65 | 0.74 | 0.52 | 0.61 | 0.69 | 0.69 | 0.79 | 0.55 | 0.65 | 0.73 | 0.73 | 0.84 | 0.58 | 0.68 | 0.78 | 0.78 | 0.89 |
| | | PI | 1.09 | 1.09 | 1.10 | 1.10 | 1.10 | 1.16 | 1.16 | 1.16 | 1.16 | 1.16 | 1.23 | 1.23 | 1.23 | 1.23 | 1.23 | 1.30 | 1.30 | 1.31 | 1.31 | 1.31 |
| | 104°F (40.0°C) | TC | 9375 | 9387 | 9397 | 9398 | 9410 | 9940 | 9951 | 9961 | 9963 | 9975 | 10533 | 10547 | 10559 | 10561 | 10573 | 11168 | 11180 | 11192 | 11194 | 11208 |
| | | S/T | 0.50 | 0.59 | 0.67 | 0.67 | 0.76 | 0.53 | 0.62 | 0.71 | 0.71 | 0.81 | 0.56 | 0.66 | 0.75 | 0.75 | 0.86 | 0.60 | 0.70 | 0.80 | 0.80 | 0.91 |
| | | PI | 1.08 | 1.09 | 1.09 | 1.09 | 1.09 | 1.15 | 1.15 | 1.15 | 1.15 | 1.15 | 1.22 | 1.22 | 1.22 | 1.22 | 1.22 | 1.29 | 1.29 | 1.29 | 1.29 | 1.30 |
| | 110°F (43.0°C) | TC | 8883 | 8895 | 8904 | 8905 | 8917 | 9418 | 9429 | 9439 | 9440 | 9452 | 9981 | 9994 | 10005 | 10007 | 10018 | 10582 | 10594 | 10605 | 10607 | 10620 |
| | | S/T | 0.52 | 0.61 | 0.69 | 0.69 | 0.79 | 0.55 | 0.65 | 0.74 | 0.74 | 0.84 | 0.58 | 0.69 | 0.78 | 0.78 | 0.89 | 0.62 | 0.73 | 0.83 | 0.83 | 0.94 |
| | | PI | 1.08 | 1.08 | 1.08 | 1.08 | 1.08 | 1.14 | 1.14 | 1.15 | 1.15 | 1.15 | 1.21 | 1.21 | 1.21 | 1.21 | 1.22 | 1.28 | 1.29 | 1.29 | 1.29 | 1.29 |
| | 115°F (46.0°C) | TC | 7825 | 7835 | 7844 | 7844 | 7855 | 8296 | 8306 | 8314 | 8316 | 8326 | 8792 | 8803 | 8813 | 8815 | 8825 | 9322 | 9332 | 9342 | 9344 | 9355 |
| | | S/T | 0.53 | 0.62 | 0.70 | 0.70 | 0.80 | 0.56 | 0.66 | 0.74 | 0.74 | 0.85 | 0.59 | 0.69 | 0.79 | 0.79 | 0.90 | 0.63 | 0.74 | 0.84 | 0.84 | 0.95 |
| | | PI | 0.95 | 0.96 | 0.96 | 0.96 | 0.96 | 1.01 | 1.01 | 1.01 | 1.01 | 1.02 | 1.07 | 1.07 | 1.07 | 1.07 | 1.08 | 1.14 | 1.14 | 1.14 | 1.14 | 1.14 |
| | 122°F (50.0°C) | TC | 6414 | 6423 | 6430 | 6430 | 6439 | 6801 | 6809 | 6816 | 6817 | 6825 | 7207 | 7217 | 7225 | 7226 | 7234 | 7641 | 7650 | 7658 | 7659 | 7669 |
| | | S/T | 0.54 | 0.63 | 0.72 | 0.72 | 0.82 | 0.57 | 0.67 | 0.76 | 0.76 | 0.87 | 0.61 | 0.71 | 0.81 | 0.81 | 0.92 | 0.64 | 0.75 | 0.86 | 0.86 | 0.98 |
| | | PI | 0.79 | 0.79 | 0.79 | 0.79 | 0.79 | 0.84 | 0.84 | 0.84 | 0.84 | 0.84 | 0.89 | 0.89 | 0.89 | 0.89 | 0.89 | 0.94 | 0.94 | 0.94 | 0.94 | 0.94 |
| 241 | 5°F (-15.0°C) | TC | 10680 | 10695 | 10706 | 10707 | 10721 | 11324 | 11337 | 11349 | 11351 | 11364 | 12000 | 12016 | 12029 | 12032 | 12045 | 12724 | 12737 | 12751 | 12753 | 12769 |
| | | S/T | 0.46 | 0.54 | 0.61 | 0.61 | 0.70 | 0.49 | 0.57 | 0.65 | 0.65 | 0.74 | 0.52 | 0.60 | 0.69 | 0.69 | 0.78 | 0.55 | 0.64 | 0.73 | 0.73 | 0.83 |
| | | PI | 0.55 | 0.55 | 0.55 | 0.55 | 0.55 | 0.58 | 0.58 | 0.58 | 0.58 | 0.59 | 0.62 | 0.62 | 0.62 | 0.62 | 0.62 | 0.66 | 0.66 | 0.66 | 0.66 | 0.66 |
| | 14°F (-10.0°C) | TC | 10815 | 10830 | 10842 | 10842 | 10857 | 11467 | 11481 | 11492 | 11494 | 11508 | 12152 | 12168 | 12182 | 12184 | 12198 | 12885 | 12899 | 12913 | 12915 | 12931 |
| | | S/T | 0.46 | 0.54 | 0.61 | 0.61 | 0.70 | 0.49 | 0.57 | 0.65 | 0.65 | 0.74 | 0.52 | 0.61 | 0.69 | 0.69 | 0.78 | 0.55 | 0.64 | 0.73 | 0.73 | 0.83 |
| | | PI | 0.52 | 0.52 | 0.52 | 0.52 | 0.52 | 0.55 | 0.55 | 0.55 | 0.55 | 0.55 | 0.58 | 0.58 | 0.58 | 0.58 | 0.58 | 0.62 | 0.62 | 0.62 | 0.62 | 0.62 |
| | 17°F (-8.3°C) | TC | 10860 | 10875 | 10887 | 10887 | 10902 | 11515 | 11529 | 11540 | 11542 | 11556 | 12203 | 12219 | 12232 | 12235 | 12248 | 12938 | 12952 | 12966 | 12968 | 12985 |
| | | S/T | 0.46 | 0.54 | 0.61 | 0.61 | 0.70 | 0.49 | 0.57 | 0.65 | 0.65 | 0.74 | 0.52 | 0.61 | 0.69 | 0.69 | 0.79 | 0.55 | 0.64 | 0.73 | 0.73 | 0.83 |
| | | PI | 0.51 | 0.51 | 0.51 | 0.51 | 0.51 | 0.54 | 0.54 | 0.54 | 0.54 | 0.54 | 0.57 | 0.57 | 0.57 | 0.57 | 0.57 | 0.61 | 0.61 | 0.61 | 0.61 | 0.61 |
| | 23°F (-5.0°C) | TC | 10607 | 10621 | 10633 | 10633 | 10647 | 11246 | 11259 | 11271 | 11273 | 11286 | 11918 | 11933 | 11947 | 11949 | 11962 | 12636 | 12650 | 12664 | 12666 | 12681 |
| | | S/T | 0.46 | 0.54 | 0.62 | 0.62 | 0.70 | 0.49 | 0.58 | 0.65 | 0.65 | 0.75 | 0.52 | 0.61 | 0.69 | 0.69 | 0.79 | 0.55 | 0.65 | 0.74 | 0.74 | 0.84 |
| | | PI | 0.56 | 0.56 | 0.56 | 0.56 | 0.56 | 0.59 | 0.60 | 0.60 | 0.60 | 0.60 | 0.63 | 0.63 | 0.63 | 0.63 | 0.63 | 0.67 | 0.67 | 0.67 | 0.67 | 0.67 |
| | 35°F (1.7°C) | TC | 10100 | 10113 | 10124 | 10125 | 10138 | 10708 | 10721 | 10732 | 10734 | 10746 | 11348 | 11363 | 11375 | 11378 | 11390 | 12032 | 12045 | 12058 | 12060 | 12075 |
| | | S/T | 0.47 | 0.55 | 0.62 | 0.62 | 0.71 | 0.49 | 0.58 | 0.66 | 0.66 | 0.75 | 0.52 | 0.61 | 0.70 | 0.70 | 0.80 | 0.55 | 0.65 | 0.74 | 0.74 | 0.84 |
| | | PI | 0.67 | 0.67 | 0.67 | 0.67 | 0.67 | 0.71 | 0.71 | 0.71 | 0.71 | 0.71 | 0.75 | 0.75 | 0.75 | 0.75 | 0.75 | 0.79 | 0.79 | 0.80 | 0.80 | 0.80 |
| | 41°F (5.0°C) | TC | 10280 | 10294 | 10305 | 10305 | 10319 | 10899 | 10912 | 10923 | 10925 | 10938 | 11551 | 11566 | 11578 | 11581 | 11594 | 12246 | 12260 | 12273 | 12275 | 12290 |
| | | S/T | 0.47 | 0.55 | 0.62 | 0.62 | 0.71 | 0.49 | 0.58 | 0.66 | 0.66 | 0.75 | 0.52 | 0.62 | 0.70 | 0.70 | 0.80 | 0.56 | 0.65 | 0.74 | 0.74 | 0.84 |
| | | PI | 0.58 | 0.58 | 0.58 | 0.58 | 0.59 | 0.62 | 0.62 | 0.62 | 0.62 | 0.62 | 0.66 | 0.66 | 0.66 | 0.66 | 0.66 | 0.69 | 0.70 | 0.70 | 0.70 | 0.70 |
| | 47°F (8.3°C) | TC | 10460 | 10474 | 10485 | 10486 | 10500 | 11090 | 11104 | 11115 | 11117 | 11130 | 11753 | 11768 | 11781 | 11784 | 11797 | 12461 | 12475 | 12488 | 12490 | 12506 |
| | | S/T | 0.47 | 0.55 | 0.62 | 0.62 | 0.71 | 0.50 | 0.58 | 0.66 | 0.66 | 0.75 | 0.53 | 0.62 | 0.70 | 0.70 | 0.80 | 0.56 | 0.65 | 0.74 | 0.74 | 0.85 |
| | | PI | 0.50 | 0.50 | 0.50 | 0.50 | 0.50 | 0.53 | 0.53 | 0.53 | 0.53 | 0.53 | 0.56 | 0.56 | 0.56 | 0.56 | 0.56 | 0.60 | 0.60 | 0.60 | 0.60 | 0.60 |
| | 50°F (10.0°C) | TC | 10377 | 10391 | 10402 | 10403 | 10417 | 11002 | 11015 | 11026 | 11028 | 11042 | 11660 | 11675 | 11688 | 11690 | 11703 | 12362 | 12376 | 12389 | 12391 | 12406 |
| | | S/T | 0.47 | 0.55 | 0.63 | 0.63 | 0.71 | 0.50 | 0.58 | 0.66 | 0.66 | 0.76 | 0.53 | 0.62 | 0.70 | 0.70 | 0.80 | 0.56 | 0.66 | 0.75 | 0.75 | 0.85 |
| | | PI | 0.51 | 0.51 | 0.52 | 0.52 | 0.52 | 0.55 | 0.55 | 0.55 | 0.55 | 0.55 | 0.58 | 0.58 | 0.58 | 0.58 | 0.58 | 0.61 | 0.61 | 0.61 | 0.61 | 0.61 |

Manufacturer reserves the right to change, at any time, specifications and designs without notice and without obligations.

# COOLING PERFORMANCE DATA (HEAT PUMP) (CONTINUED)

| AIRFLOW (CFM) | OUTDOOR DB °F (°C) | ID WB °F (°C) | 60.8°F(16.0°C) | | | | | 64.4°F(18.0°C) | | | | | 67°F(19.4°C) | | | | | 71.6°F(22.0°C) | | | | |
|---|---|---|---|---|---|---|---|---|---|---|---|---|---|---|---|---|---|---|---|---|---|---|
| | | ID DB °F (°C) | 73.4°F (23.0°C) | 77.0°F (25.0°C) | 80.0°F (26.7°C) | 80.6°F (27.0°C) | 84.2°F (29.0°C) | 73.4°F (23.0°C) | 77.0°F (25.0°C) | 80.0°F (26.7°C) | 80.6°F (27.0°C) | 84.2°F (29.0°C) | 73.4°F (23.0°C) | 77.0°F (25.0°C) | 80.0°F (26.7°C) | 80.6°F (27.0°C) | 84.2°F (29.0°C) | 73.4°F (23.0°C) | 77.0°F (25.0°C) | 80.0°F (26.7°C) | 80.6°F (27.0°C) | 84.2°F (29.0°C) |
| 241 | 59°F (15.0°C) | TC | 10128 | 10141 | 10152 | 10153 | 10167 | 10738 | 10751 | 10762 | 10764 | 10776 | 11380 | 11394 | 11407 | 11409 | 11422 | 12065 | 12078 | 12092 | 12094 | 12109 |
| | | S/T | 0.47 | 0.55 | 0.63 | 0.63 | 0.72 | 0.50 | 0.59 | 0.67 | 0.67 | 0.76 | 0.53 | 0.62 | 0.71 | 0.71 | 0.81 | 0.56 | 0.66 | 0.75 | 0.75 | 0.86 |
| | | PI | 0.56 | 0.56 | 0.56 | 0.56 | 0.56 | 0.59 | 0.59 | 0.59 | 0.59 | 0.59 | 0.63 | 0.63 | 0.63 | 0.63 | 0.63 | 0.66 | 0.66 | 0.67 | 0.67 | 0.67 |
| | 68°F (20.0°C) | TC | 9879 | 9892 | 9903 | 9903 | 9916 | 10474 | 10486 | 10497 | 10499 | 10511 | 11100 | 11114 | 11127 | 11129 | 11141 | 11769 | 11781 | 11794 | 11796 | 11811 |
| | | S/T | 0.49 | 0.57 | 0.65 | 0.65 | 0.74 | 0.51 | 0.60 | 0.69 | 0.69 | 0.78 | 0.55 | 0.64 | 0.73 | 0.73 | 0.83 | 0.58 | 0.68 | 0.77 | 0.77 | 0.88 |
| | | PI | 0.60 | 0.60 | 0.60 | 0.60 | 0.60 | 0.64 | 0.64 | 0.64 | 0.64 | 0.64 | 0.68 | 0.68 | 0.68 | 0.68 | 0.68 | 0.72 | 0.72 | 0.72 | 0.72 | 0.72 |
| | 77°F (25.0°C) | TC | 9629 | 9642 | 9653 | 9653 | 9666 | 10210 | 10222 | 10232 | 10234 | 10246 | 10820 | 10834 | 10846 | 10848 | 10860 | 11472 | 11484 | 11497 | 11498 | 11513 |
| | | S/T | 0.49 | 0.58 | 0.66 | 0.66 | 0.75 | 0.52 | 0.61 | 0.69 | 0.69 | 0.79 | 0.55 | 0.65 | 0.74 | 0.74 | 0.84 | 0.59 | 0.69 | 0.78 | 0.78 | 0.89 |
| | | PI | 0.64 | 0.65 | 0.65 | 0.65 | 0.65 | 0.68 | 0.68 | 0.68 | 0.68 | 0.69 | 0.72 | 0.72 | 0.73 | 0.73 | 0.73 | 0.77 | 0.77 | 0.77 | 0.77 | 0.77 |
| | 82°F (27.8°C) | TC | 9668 | 9681 | 9691 | 9692 | 9705 | 10250 | 10262 | 10273 | 10275 | 10287 | 10863 | 10877 | 10889 | 10891 | 10903 | 11517 | 11530 | 11542 | 11544 | 11558 |
| | | S/T | 0.50 | 0.58 | 0.66 | 0.66 | 0.76 | 0.53 | 0.62 | 0.70 | 0.70 | 0.80 | 0.56 | 0.66 | 0.75 | 0.75 | 0.85 | 0.59 | 0.70 | 0.79 | 0.79 | 0.90 |
| | | PI | 0.72 | 0.72 | 0.72 | 0.72 | 0.72 | 0.76 | 0.76 | 0.76 | 0.76 | 0.77 | 0.81 | 0.81 | 0.81 | 0.81 | 0.81 | 0.86 | 0.86 | 0.86 | 0.86 | 0.86 |
| | 86°F (30.0°C) | TC | 9921 | 9935 | 9945 | 9946 | 9959 | 10519 | 10532 | 10542 | 10544 | 10557 | 11148 | 11162 | 11174 | 11177 | 11189 | 11819 | 11832 | 11845 | 11847 | 11862 |
| | | S/T | 0.50 | 0.59 | 0.67 | 0.67 | 0.77 | 0.53 | 0.63 | 0.71 | 0.71 | 0.81 | 0.57 | 0.66 | 0.76 | 0.76 | 0.86 | 0.60 | 0.70 | 0.80 | 0.80 | 0.91 |
| | | PI | 0.84 | 0.85 | 0.85 | 0.85 | 0.85 | 0.90 | 0.90 | 0.90 | 0.90 | 0.90 | 0.95 | 0.95 | 0.95 | 0.95 | 0.95 | 1.01 | 1.01 | 1.01 | 1.01 | 1.01 |
| | 95°F (35.0°C) | TC | 10492 | 10506 | 10517 | 10517 | 10532 | 11124 | 11137 | 11148 | 11150 | 11163 | 11788 | 11804 | 11817 | 11819 | 11832 | 12499 | 12512 | 12526 | 12528 | 12543 |
| | | S/T | 0.50 | 0.59 | 0.67 | 0.67 | 0.77 | 0.53 | 0.63 | 0.71 | 0.71 | 0.81 | 0.57 | 0.66 | 0.76 | 0.76 | 0.86 | 0.60 | 0.70 | 0.80 | 0.80 | 0.91 |
| | | PI | 1.12 | 1.13 | 1.13 | 1.13 | 1.13 | 1.19 | 1.19 | 1.20 | 1.20 | 1.20 | 1.26 | 1.27 | 1.27 | 1.27 | 1.27 | 1.34 | 1.34 | 1.34 | 1.34 | 1.35 |
| | 104°F (40.0°C) | TC | 9648 | 9661 | 9671 | 9672 | 9685 | 10229 | 10241 | 10251 | 10253 | 10266 | 10840 | 10854 | 10866 | 10868 | 10881 | 11493 | 11506 | 11518 | 11520 | 11535 |
| | | S/T | 0.52 | 0.61 | 0.69 | 0.69 | 0.79 | 0.55 | 0.64 | 0.73 | 0.73 | 0.83 | 0.58 | 0.68 | 0.77 | 0.77 | 0.88 | 0.62 | 0.72 | 0.82 | 0.82 | 0.94 |
| | | PI | 1.12 | 1.12 | 1.12 | 1.12 | 1.12 | 1.18 | 1.18 | 1.19 | 1.19 | 1.19 | 1.25 | 1.26 | 1.26 | 1.26 | 1.26 | 1.33 | 1.33 | 1.33 | 1.33 | 1.33 |
| | 110°F (43.0°C) | TC | 9141 | 9154 | 9164 | 9164 | 9176 | 9692 | 9704 | 9713 | 9715 | 9727 | 10271 | 10285 | 10296 | 10298 | 10310 | 10890 | 10902 | 10914 | 10916 | 10929 |
| | | S/T | 0.54 | 0.63 | 0.71 | 0.71 | 0.81 | 0.57 | 0.67 | 0.76 | 0.76 | 0.86 | 0.60 | 0.71 | 0.80 | 0.80 | 0.91 | 0.64 | 0.75 | 0.85 | 0.85 | 0.97 |
| | | PI | 1.11 | 1.11 | 1.11 | 1.11 | 1.11 | 1.18 | 1.18 | 1.18 | 1.18 | 1.18 | 1.25 | 1.25 | 1.25 | 1.25 | 1.25 | 1.32 | 1.32 | 1.33 | 1.33 | 1.33 |
| | 115°F (46.0°C) | TC | 8053 | 8064 | 8072 | 8073 | 8084 | 8538 | 8548 | 8557 | 8558 | 8568 | 9048 | 9060 | 9070 | 9072 | 9082 | 9593 | 9604 | 9614 | 9616 | 9628 |
| | | S/T | 0.54 | 0.64 | 0.72 | 0.72 | 0.82 | 0.57 | 0.67 | 0.77 | 0.77 | 0.87 | 0.61 | 0.71 | 0.81 | 0.81 | 0.93 | 0.65 | 0.76 | 0.86 | 0.86 | 0.98 |
| | | PI | 0.98 | 0.98 | 0.98 | 0.98 | 0.99 | 1.04 | 1.04 | 1.04 | 1.04 | 1.04 | 1.10 | 1.10 | 1.11 | 1.11 | 1.11 | 1.17 | 1.17 | 1.17 | 1.17 | 1.17 |
| | 122°F (50.0°C) | TC | 6601 | 6610 | 6617 | 6617 | 6626 | 6999 | 7007 | 7014 | 7016 | 7024 | 7417 | 7427 | 7435 | 7436 | 7445 | 7864 | 7873 | 7881 | 7882 | 7892 |
| | | S/T | 0.55 | 0.65 | 0.74 | 0.74 | 0.84 | 0.59 | 0.69 | 0.78 | 0.78 | 0.89 | 0.62 | 0.73 | 0.83 | 0.83 | 0.95 | 0.66 | 0.78 | 0.88 | 0.88 | 1.00 |
| | | PI | 0.81 | 0.81 | 0.81 | 0.81 | 0.81 | 0.86 | 0.86 | 0.86 | 0.86 | 0.86 | 0.91 | 0.91 | 0.91 | 0.91 | 0.91 | 0.97 | 0.97 | 0.97 | 0.97 | 0.97 |
| 294 | 5°F (-15.0°C) | TC | 10991 | 11006 | 11018 | 11018 | 11033 | 11654 | 11668 | 11679 | 11681 | 11695 | 12350 | 12366 | 12380 | 12382 | 12396 | 13094 | 13108 | 13123 | 13125 | 13141 |
| | | S/T | 0.47 | 0.55 | 0.63 | 0.63 | 0.72 | 0.50 | 0.59 | 0.67 | 0.67 | 0.76 | 0.53 | 0.62 | 0.71 | 0.71 | 0.81 | 0.56 | 0.66 | 0.75 | 0.75 | 0.85 |
| | | PI | 0.57 | 0.57 | 0.57 | 0.57 | 0.57 | 0.60 | 0.60 | 0.60 | 0.60 | 0.60 | 0.64 | 0.64 | 0.64 | 0.64 | 0.64 | 0.67 | 0.67 | 0.68 | 0.68 | 0.68 |
| | 14°F (-10.0°C) | TC | 11130 | 11145 | 11157 | 11158 | 11173 | 11801 | 11815 | 11827 | 11829 | 11843 | 12506 | 12523 | 12536 | 12539 | 12553 | 13260 | 13274 | 13289 | 13291 | 13307 |
| | | S/T | 0.47 | 0.55 | 0.63 | 0.63 | 0.72 | 0.50 | 0.59 | 0.67 | 0.67 | 0.76 | 0.53 | 0.62 | 0.71 | 0.71 | 0.81 | 0.56 | 0.66 | 0.75 | 0.75 | 0.86 |
| | | PI | 0.53 | 0.53 | 0.53 | 0.53 | 0.54 | 0.57 | 0.57 | 0.57 | 0.57 | 0.57 | 0.60 | 0.60 | 0.60 | 0.60 | 0.60 | 0.64 | 0.64 | 0.64 | 0.64 | 0.64 |
| | 17°F (-8.3°C) | TC | 11177 | 11192 | 11204 | 11204 | 11220 | 11850 | 11864 | 11876 | 11878 | 11893 | 12558 | 12575 | 12589 | 12591 | 12605 | 13315 | 13330 | 13344 | 13346 | 13363 |
| | | S/T | 0.47 | 0.56 | 0.63 | 0.63 | 0.72 | 0.50 | 0.59 | 0.67 | 0.67 | 0.76 | 0.53 | 0.63 | 0.71 | 0.71 | 0.81 | 0.57 | 0.66 | 0.75 | 0.75 | 0.86 |
| | | PI | 0.52 | 0.52 | 0.52 | 0.52 | 0.52 | 0.55 | 0.55 | 0.56 | 0.56 | 0.56 | 0.59 | 0.59 | 0.59 | 0.59 | 0.59 | 0.62 | 0.62 | 0.62 | 0.62 | 0.63 |

Manufacturer reserves the right to change, at any time, specifications and designs without notice and without obligations.

# COOLING PERFORMANCE DATA (HEAT PUMP) (CONTINUED)

| AIRFLOW (CFM) | OUTDOOR DB °F (°C) | ID WB °F (°C) | 60.8°F(16.0°C) | | | | | 64.4°F(18.0°C) | | | | | 67°F(19.4°C) | | | | | 71.6°F(22.0°C) | | | | |
|---|---|---|---|---|---|---|---|---|---|---|---|---|---|---|---|---|---|---|---|---|---|---|
| | | ID DB °F (°C) | 73.4°F (23.0°C) | 77.0°F (25.0°C) | 80.0°F (26.7°C) | 80.6°F (27.0°C) | 84.2°F (29.0°C) | 73.4°F (23.0°C) | 77.0°F (25.0°C) | 80.0°F (26.7°C) | 80.6°F (27.0°C) | 84.2°F (29.0°C) | 73.4°F (23.0°C) | 77.0°F (25.0°C) | 80.0°F (26.7°C) | 80.6°F (27.0°C) | 84.2°F (29.0°C) | 73.4°F (23.0°C) | 77.0°F (25.0°C) | 80.0°F (26.7°C) | 80.6°F (27.0°C) | 84.2°F (29.0°C) |
| 294 | 23°F (-5.0°C) | TC | 10916 | 10930 | 10942 | 10943 | 10958 | 11574 | 11587 | 11599 | 11601 | 11615 | 12265 | 12281 | 12295 | 12297 | 12311 | 13004 | 13018 | 13032 | 13034 | 13051 |
| | | S/T | 0.48 | 0.56 | 0.64 | 0.64 | 0.72 | 0.51 | 0.59 | 0.67 | 0.67 | 0.77 | 0.54 | 0.63 | 0.71 | 0.71 | 0.81 | 0.57 | 0.67 | 0.76 | 0.76 | 0.86 |
| | | PI | 0.58 | 0.58 | 0.58 | 0.58 | 0.58 | 0.61 | 0.61 | 0.61 | 0.61 | 0.61 | 0.65 | 0.65 | 0.65 | 0.65 | 0.65 | 0.69 | 0.69 | 0.69 | 0.69 | 0.69 |
| | 35°F (1.7°C) | TC | 10394 | 10408 | 10419 | 10419 | 10434 | 11020 | 11033 | 11044 | 11046 | 11059 | 11679 | 11694 | 11707 | 11709 | 11722 | 12382 | 12396 | 12409 | 12411 | 12427 |
| | | S/T | 0.48 | 0.56 | 0.64 | 0.64 | 0.73 | 0.51 | 0.60 | 0.68 | 0.68 | 0.77 | 0.54 | 0.63 | 0.72 | 0.72 | 0.82 | 0.57 | 0.67 | 0.76 | 0.76 | 0.87 |
| | | PI | 0.69 | 0.69 | 0.69 | 0.69 | 0.69 | 0.73 | 0.73 | 0.73 | 0.73 | 0.73 | 0.77 | 0.77 | 0.77 | 0.77 | 0.77 | 0.82 | 0.82 | 0.82 | 0.82 | 0.82 |
| | 41°F (5.0°C) | TC | 10579 | 10593 | 10605 | 10605 | 10620 | 11217 | 11230 | 11241 | 11243 | 11257 | 11887 | 11902 | 11916 | 11918 | 11931 | 12603 | 12617 | 12631 | 12633 | 12648 |
| | | S/T | 0.48 | 0.56 | 0.64 | 0.64 | 0.73 | 0.51 | 0.60 | 0.68 | 0.68 | 0.77 | 0.54 | 0.63 | 0.72 | 0.72 | 0.82 | 0.57 | 0.67 | 0.76 | 0.76 | 0.87 |
| | | PI | 0.60 | 0.60 | 0.60 | 0.60 | 0.60 | 0.64 | 0.64 | 0.64 | 0.64 | 0.64 | 0.67 | 0.68 | 0.68 | 0.68 | 0.68 | 0.71 | 0.72 | 0.72 | 0.72 | 0.72 |
| | 47°F (8.3°C) | TC | 10765 | 10779 | 10791 | 10791 | 10806 | 11413 | 11427 | 11438 | 11441 | 11454 | 12095 | 12111 | 12125 | 12127 | 12140 | 12824 | 12838 | 12852 | 12854 | 12870 |
| | | S/T | 0.48 | 0.57 | 0.64 | 0.64 | 0.73 | 0.51 | 0.60 | 0.68 | 0.68 | 0.78 | 0.54 | 0.63 | 0.72 | 0.72 | 0.82 | 0.57 | 0.67 | 0.76 | 0.76 | 0.87 |
| | | PI | 0.51 | 0.51 | 0.52 | 0.52 | 0.52 | 0.55 | 0.55 | 0.55 | 0.55 | 0.55 | 0.58 | 0.58 | 0.58 | 0.58 | 0.58 | 0.61 | 0.61 | 0.61 | 0.61 | 0.61 |
| | 50°F (10.0°C) | TC | 10679 | 10694 | 10705 | 10706 | 10720 | 11323 | 11336 | 11347 | 11350 | 11363 | 11999 | 12015 | 12028 | 12031 | 12044 | 12722 | 12736 | 12750 | 12752 | 12768 |
| | | S/T | 0.48 | 0.57 | 0.65 | 0.65 | 0.74 | 0.51 | 0.60 | 0.68 | 0.68 | 0.78 | 0.54 | 0.64 | 0.73 | 0.73 | 0.83 | 0.58 | 0.68 | 0.77 | 0.77 | 0.88 |
| | | PI | 0.53 | 0.53 | 0.53 | 0.53 | 0.53 | 0.56 | 0.56 | 0.56 | 0.56 | 0.56 | 0.59 | 0.60 | 0.60 | 0.60 | 0.60 | 0.63 | 0.63 | 0.63 | 0.63 | 0.63 |
| | 59°F (15.0°C) | TC | 10423 | 10437 | 10448 | 10449 | 10463 | 11051 | 11064 | 11075 | 11077 | 11090 | 11711 | 11726 | 11739 | 11742 | 11755 | 12417 | 12430 | 12444 | 12446 | 12461 |
| | | S/T | 0.49 | 0.57 | 0.65 | 0.65 | 0.74 | 0.52 | 0.61 | 0.69 | 0.69 | 0.78 | 0.55 | 0.64 | 0.73 | 0.73 | 0.83 | 0.58 | 0.68 | 0.77 | 0.77 | 0.88 |
| | | PI | 0.57 | 0.57 | 0.58 | 0.58 | 0.58 | 0.61 | 0.61 | 0.61 | 0.61 | 0.61 | 0.64 | 0.65 | 0.65 | 0.65 | 0.65 | 0.68 | 0.68 | 0.68 | 0.69 | 0.69 |
| | 68°F (20.0°C) | TC | 10166 | 10180 | 10191 | 10191 | 10205 | 10779 | 10792 | 10802 | 10805 | 10817 | 11423 | 11438 | 11451 | 11453 | 11466 | 12111 | 12124 | 12138 | 12140 | 12155 |
| | | S/T | 0.50 | 0.59 | 0.67 | 0.67 | 0.76 | 0.53 | 0.62 | 0.71 | 0.71 | 0.80 | 0.56 | 0.66 | 0.75 | 0.75 | 0.85 | 0.59 | 0.70 | 0.79 | 0.79 | 0.90 |
| | | PI | 0.62 | 0.62 | 0.62 | 0.62 | 0.62 | 0.66 | 0.66 | 0.66 | 0.66 | 0.66 | 0.69 | 0.70 | 0.70 | 0.70 | 0.70 | 0.74 | 0.74 | 0.74 | 0.74 | 0.74 |
| | 77°F (25.0°C) | TC | 9910 | 9923 | 9934 | 9934 | 9948 | 10507 | 10520 | 10530 | 10532 | 10545 | 11135 | 11149 | 11162 | 11164 | 11176 | 11806 | 11819 | 11832 | 11833 | 11848 |
| | | S/T | 0.51 | 0.59 | 0.67 | 0.67 | 0.77 | 0.54 | 0.63 | 0.72 | 0.72 | 0.82 | 0.57 | 0.67 | 0.76 | 0.76 | 0.86 | 0.60 | 0.71 | 0.80 | 0.80 | 0.92 |
| | | PI | 0.66 | 0.66 | 0.66 | 0.66 | 0.67 | 0.70 | 0.70 | 0.70 | 0.70 | 0.71 | 0.74 | 0.75 | 0.75 | 0.75 | 0.75 | 0.79 | 0.79 | 0.79 | 0.79 | 0.79 |
| | 82°F (27.8°C) | TC | 9949 | 9963 | 9973 | 9974 | 9987 | 10549 | 10561 | 10572 | 10574 | 10586 | 11179 | 11194 | 11206 | 11208 | 11221 | 11853 | 11866 | 11878 | 11880 | 11895 |
| | | S/T | 0.51 | 0.60 | 0.68 | 0.68 | 0.78 | 0.54 | 0.64 | 0.72 | 0.72 | 0.83 | 0.58 | 0.68 | 0.77 | 0.77 | 0.88 | 0.61 | 0.72 | 0.81 | 0.81 | 0.93 |
| | | PI | 0.74 | 0.74 | 0.74 | 0.74 | 0.74 | 0.79 | 0.79 | 0.79 | 0.79 | 0.79 | 0.83 | 0.83 | 0.83 | 0.83 | 0.83 | 0.88 | 0.88 | 0.88 | 0.88 | 0.89 |
| | 86°F (30.0°C) | TC | 10210 | 10224 | 10235 | 10235 | 10249 | 10825 | 10838 | 10849 | 10851 | 10864 | 11472 | 11487 | 11500 | 11502 | 11515 | 12163 | 12177 | 12190 | 12192 | 12207 |
| | | S/T | 0.52 | 0.61 | 0.69 | 0.69 | 0.79 | 0.55 | 0.65 | 0.73 | 0.73 | 0.84 | 0.58 | 0.68 | 0.78 | 0.78 | 0.89 | 0.62 | 0.73 | 0.82 | 0.82 | 0.94 |
| | | PI | 0.87 | 0.87 | 0.87 | 0.87 | 0.87 | 0.92 | 0.92 | 0.92 | 0.92 | 0.92 | 0.98 | 0.98 | 0.98 | 0.98 | 0.98 | 1.04 | 1.04 | 1.04 | 1.04 | 1.04 |
| | 95°F (35.0°C) | TC | 10797 | 10812 | 10823 | 10824 | 10838 | 11448 | 11461 | 11473 | 11475 | 11489 | 12132 | 12147 | 12161 | 12163 | 12177 | 12863 | 12877 | 12891 | 12893 | 12909 |
| | | S/T | 0.52 | 0.61 | 0.69 | 0.69 | 0.79 | 0.55 | 0.65 | 0.73 | 0.73 | 0.84 | 0.58 | 0.68 | 0.78 | 0.78 | 0.89 | 0.62 | 0.73 | 0.82 | 0.82 | 0.94 |
| | | PI | 1.16 | 1.16 | 1.16 | 1.16 | 1.16 | 1.23 | 1.23 | 1.23 | 1.23 | 1.23 | 1.30 | 1.30 | 1.30 | 1.30 | 1.31 | 1.38 | 1.38 | 1.38 | 1.38 | 1.38 |
| | 104°F (40.0°C) | TC | 9929 | 9942 | 9953 | 9953 | 9967 | 10527 | 10540 | 10550 | 10552 | 10565 | 11156 | 11171 | 11183 | 11185 | 11198 | 11828 | 11841 | 11854 | 11856 | 11871 |
| | | S/T | 0.53 | 0.62 | 0.71 | 0.71 | 0.81 | 0.56 | 0.66 | 0.75 | 0.75 | 0.86 | 0.60 | 0.70 | 0.80 | 0.80 | 0.91 | 0.63 | 0.74 | 0.84 | 0.84 | 0.96 |
| | | PI | 1.15 | 1.15 | 1.15 | 1.15 | 1.15 | 1.22 | 1.22 | 1.22 | 1.22 | 1.22 | 1.29 | 1.29 | 1.29 | 1.29 | 1.29 | 1.37 | 1.37 | 1.37 | 1.37 | 1.37 |
| | 110°F (43.0°C) | TC | 9408 | 9420 | 9431 | 9431 | 9444 | 9975 | 9986 | 9996 | 9998 | 10010 | 10571 | 10584 | 10596 | 10598 | 10610 | 11208 | 11220 | 11232 | 11234 | 11248 |
| | | S/T | 0.55 | 0.65 | 0.74 | 0.74 | 0.84 | 0.58 | 0.69 | 0.78 | 0.78 | 0.89 | 0.62 | 0.73 | 0.83 | 0.83 | 0.94 | 0.66 | 0.77 | 0.88 | 0.88 | 1.00 |
| | | PI | 1.14 | 1.14 | 1.15 | 1.15 | 1.15 | 1.21 | 1.21 | 1.21 | 1.21 | 1.22 | 1.28 | 1.29 | 1.29 | 1.29 | 1.29 | 1.36 | 1.36 | 1.36 | 1.36 | 1.37 |

Manufacturer reserves the right to change, at any time, specifications and designs without notice and without obligations.

# COOLING PERFORMANCE DATA (HEAT PUMP) (CONTINUED)

| AIRFLOW (CFM) | OUTDOOR DB °F (°C) | ID WB °F (°C) | 60.8°F(16.0°C) | | | | | 64.4°F(18.0°C) | | | | | 67°F(19.4°C) | | | | | 71.6°F(22.0°C) | | | | |
|---|---|---|---|---|---|---|---|---|---|---|---|---|---|---|---|---|---|---|---|---|---|---|
| | | ID DB °F (°C) | 73.4°F (23.0°C) | 77.0°F (25.0°C) | 80.0°F (26.7°C) | 80.6°F (27.0°C) | 84.2°F (29.0°C) | 73.4°F (23.0°C) | 77.0°F (25.0°C) | 80.0°F (26.7°C) | 80.6°F (27.0°C) | 84.2°F (29.0°C) | 73.4°F (23.0°C) | 77.0°F (25.0°C) | 80.0°F (26.7°C) | 80.6°F (27.0°C) | 84.2°F (29.0°C) | 73.4°F (23.0°C) | 77.0°F (25.0°C) | 80.0°F (26.7°C) | 80.6°F (27.0°C) | 84.2°F (29.0°C) |
| 294 | 115°F (46.0°C) | TC | 8287 | 8298 | 8307 | 8308 | 8319 | 8787 | 8797 | 8806 | 8808 | 8818 | 9312 | 9324 | 9334 | 9336 | 9346 | 9873 | 9883 | 9894 | 9896 | 9908 |
| | | S/T | 0.56 | 0.65 | 0.74 | 0.74 | 0.85 | 0.59 | 0.69 | 0.79 | 0.79 | 0.90 | 0.63 | 0.74 | 0.84 | 0.84 | 0.95 | 0.66 | 0.78 | 0.89 | 0.89 | 1.00 |
| | | PI | 1.01 | 1.01 | 1.01 | 1.01 | 1.01 | 1.07 | 1.07 | 1.07 | 1.07 | 1.08 | 1.14 | 1.14 | 1.14 | 1.14 | 1.14 | 1.20 | 1.21 | 1.21 | 1.21 | 1.21 |
| | 122°F (50.0°C) | TC | 6793 | 6803 | 6810 | 6810 | 6819 | 7203 | 7211 | 7218 | 7220 | 7228 | 7633 | 7643 | 7652 | 7653 | 7662 | 8093 | 8102 | 8111 | 8112 | 8122 |
| | | S/T | 0.57 | 0.67 | 0.76 | 0.76 | 0.87 | 0.61 | 0.71 | 0.81 | 0.81 | 0.92 | 0.64 | 0.75 | 0.86 | 0.86 | 0.97 | 0.68 | 0.80 | 0.91 | 0.91 | 1.00 |
| | | PI | 0.83 | 0.84 | 0.84 | 0.84 | 0.84 | 0.88 | 0.89 | 0.89 | 0.89 | 0.89 | 0.94 | 0.94 | 0.94 | 0.94 | 0.94 | 0.99 | 1.00 | 1.00 | 1.00 | 1.00 |
| 312 | 5°F (-15.0°C) | TC | 11312 | 11327 | 11339 | 11339 | 11355 | 11993 | 12007 | 12019 | 12022 | 12036 | 12710 | 12726 | 12740 | 12743 | 12757 | 13476 | 13490 | 13505 | 13507 | 13524 |
| | | S/T | 0.49 | 0.57 | 0.65 | 0.65 | 0.74 | 0.51 | 0.60 | 0.69 | 0.69 | 0.78 | 0.55 | 0.64 | 0.73 | 0.73 | 0.83 | 0.58 | 0.68 | 0.77 | 0.77 | 0.88 |
| | | PI | 0.58 | 0.58 | 0.58 | 0.58 | 0.58 | 0.62 | 0.62 | 0.62 | 0.62 | 0.62 | 0.65 | 0.66 | 0.66 | 0.66 | 0.66 | 0.69 | 0.69 | 0.70 | 0.70 | 0.70 |
| | 14°F (-10.0°C) | TC | 11455 | 11470 | 11482 | 11483 | 11498 | 12145 | 12159 | 12171 | 12174 | 12188 | 12871 | 12887 | 12902 | 12904 | 12918 | 13646 | 13661 | 13676 | 13678 | 13695 |
| | | S/T | 0.49 | 0.57 | 0.65 | 0.65 | 0.74 | 0.52 | 0.61 | 0.69 | 0.69 | 0.78 | 0.55 | 0.64 | 0.73 | 0.73 | 0.83 | 0.58 | 0.68 | 0.77 | 0.77 | 0.88 |
| | | PI | 0.55 | 0.55 | 0.55 | 0.55 | 0.55 | 0.58 | 0.58 | 0.58 | 0.58 | 0.58 | 0.62 | 0.62 | 0.62 | 0.62 | 0.62 | 0.65 | 0.65 | 0.66 | 0.66 | 0.66 |
| | 17°F (-8.3°C) | TC | 11502 | 11518 | 11530 | 11531 | 11546 | 12196 | 12210 | 12222 | 12224 | 12239 | 12924 | 12941 | 12955 | 12958 | 12972 | 13703 | 13718 | 13733 | 13735 | 13752 |
| | | S/T | 0.49 | 0.57 | 0.65 | 0.65 | 0.74 | 0.52 | 0.61 | 0.69 | 0.69 | 0.79 | 0.55 | 0.64 | 0.73 | 0.73 | 0.83 | 0.58 | 0.68 | 0.78 | 0.78 | 0.88 |
| | | PI | 0.54 | 0.54 | 0.54 | 0.54 | 0.54 | 0.57 | 0.57 | 0.57 | 0.57 | 0.57 | 0.60 | 0.61 | 0.61 | 0.61 | 0.61 | 0.64 | 0.64 | 0.64 | 0.64 | 0.64 |
| | 23°F (-5.0°C) | TC | 11234 | 11249 | 11261 | 11261 | 11277 | 11911 | 11925 | 11937 | 11939 | 11953 | 12622 | 12639 | 12653 | 12655 | 12669 | 13383 | 13397 | 13412 | 13414 | 13431 |
| | | S/T | 0.49 | 0.58 | 0.65 | 0.65 | 0.75 | 0.52 | 0.61 | 0.69 | 0.69 | 0.79 | 0.55 | 0.65 | 0.74 | 0.74 | 0.84 | 0.58 | 0.69 | 0.78 | 0.78 | 0.89 |
| | | PI | 0.59 | 0.59 | 0.60 | 0.60 | 0.60 | 0.63 | 0.63 | 0.63 | 0.63 | 0.63 | 0.67 | 0.67 | 0.67 | 0.67 | 0.67 | 0.71 | 0.71 | 0.71 | 0.71 | 0.71 |
| | 35°F (1.7°C) | TC | 10697 | 10711 | 10722 | 10723 | 10737 | 11341 | 11355 | 11366 | 11368 | 11382 | 12019 | 12034 | 12048 | 12050 | 12063 | 12743 | 12757 | 12771 | 12773 | 12789 |
| | | S/T | 0.49 | 0.58 | 0.66 | 0.66 | 0.75 | 0.52 | 0.61 | 0.70 | 0.70 | 0.79 | 0.55 | 0.65 | 0.74 | 0.74 | 0.84 | 0.59 | 0.69 | 0.78 | 0.78 | 0.89 |
| | | PI | 0.71 | 0.71 | 0.71 | 0.71 | 0.71 | 0.75 | 0.75 | 0.75 | 0.75 | 0.75 | 0.79 | 0.79 | 0.80 | 0.80 | 0.80 | 0.84 | 0.84 | 0.84 | 0.84 | 0.84 |
| | 41°F (5.0°C) | TC | 10887 | 10902 | 10914 | 10914 | 10929 | 11544 | 11557 | 11569 | 11571 | 11585 | 12233 | 12249 | 12263 | 12265 | 12279 | 12970 | 12984 | 12998 | 13001 | 13017 |
| | | S/T | 0.49 | 0.58 | 0.66 | 0.66 | 0.75 | 0.52 | 0.61 | 0.70 | 0.70 | 0.80 | 0.56 | 0.65 | 0.74 | 0.74 | 0.84 | 0.59 | 0.69 | 0.78 | 0.78 | 0.89 |
| | | PI | 0.62 | 0.62 | 0.62 | 0.62 | 0.62 | 0.65 | 0.66 | 0.66 | 0.66 | 0.66 | 0.69 | 0.69 | 0.70 | 0.70 | 0.70 | 0.74 | 0.74 | 0.74 | 0.74 | 0.74 |
| | 47°F (8.3°C) | TC | 11078 | 11093 | 11105 | 11106 | 11121 | 11746 | 11760 | 11771 | 11774 | 11788 | 12448 | 12464 | 12478 | 12480 | 12494 | 13198 | 13212 | 13226 | 13228 | 13245 |
| | | S/T | 0.50 | 0.58 | 0.66 | 0.66 | 0.75 | 0.53 | 0.62 | 0.70 | 0.70 | 0.80 | 0.56 | 0.65 | 0.74 | 0.74 | 0.85 | 0.59 | 0.69 | 0.79 | 0.79 | 0.90 |
| | | PI | 0.53 | 0.53 | 0.53 | 0.53 | 0.53 | 0.56 | 0.56 | 0.56 | 0.56 | 0.56 | 0.59 | 0.60 | 0.60 | 0.60 | 0.60 | 0.63 | 0.63 | 0.63 | 0.63 | 0.63 |
| | 50°F (10.0°C) | TC | 10990 | 11005 | 11017 | 11017 | 11032 | 11653 | 11666 | 11678 | 11680 | 11694 | 12349 | 12365 | 12379 | 12381 | 12395 | 13093 | 13107 | 13121 | 13123 | 13140 |
| | | S/T | 0.50 | 0.58 | 0.66 | 0.66 | 0.76 | 0.53 | 0.62 | 0.70 | 0.70 | 0.80 | 0.56 | 0.66 | 0.75 | 0.75 | 0.85 | 0.59 | 0.70 | 0.79 | 0.79 | 0.90 |
| | | PI | 0.54 | 0.55 | 0.55 | 0.55 | 0.55 | 0.58 | 0.58 | 0.58 | 0.58 | 0.58 | 0.61 | 0.61 | 0.61 | 0.61 | 0.61 | 0.65 | 0.65 | 0.65 | 0.65 | 0.65 |
| | 59°F (15.0°C) | TC | 10726 | 10741 | 10752 | 10753 | 10767 | 11373 | 11386 | 11398 | 11400 | 11413 | 12052 | 12068 | 12081 | 12084 | 12097 | 12778 | 12792 | 12806 | 12808 | 12824 |
| | | S/T | 0.50 | 0.59 | 0.67 | 0.67 | 0.76 | 0.53 | 0.62 | 0.71 | 0.71 | 0.81 | 0.56 | 0.66 | 0.75 | 0.75 | 0.86 | 0.60 | 0.70 | 0.80 | 0.80 | 0.91 |
| | | PI | 0.59 | 0.59 | 0.59 | 0.59 | 0.59 | 0.63 | 0.63 | 0.63 | 0.63 | 0.63 | 0.66 | 0.66 | 0.66 | 0.67 | 0.67 | 0.70 | 0.70 | 0.70 | 0.70 | 0.71 |
| | 68°F (20.0°C) | TC | 10462 | 10477 | 10488 | 10488 | 10502 | 11093 | 11106 | 11117 | 11119 | 11133 | 11756 | 11771 | 11784 | 11786 | 11799 | 12464 | 12478 | 12491 | 12493 | 12509 |
| | | S/T | 0.51 | 0.60 | 0.69 | 0.69 | 0.78 | 0.54 | 0.64 | 0.73 | 0.73 | 0.83 | 0.58 | 0.68 | 0.77 | 0.77 | 0.88 | 0.61 | 0.72 | 0.82 | 0.82 | 0.93 |
| | | PI | 0.64 | 0.64 | 0.64 | 0.64 | 0.64 | 0.67 | 0.68 | 0.68 | 0.68 | 0.68 | 0.71 | 0.72 | 0.72 | 0.72 | 0.72 | 0.76 | 0.76 | 0.76 | 0.76 | 0.76 |
| | 77°F (25.0°C) | TC | 10199 | 10212 | 10223 | 10224 | 10238 | 10813 | 10826 | 10837 | 10839 | 10852 | 11459 | 11474 | 11487 | 11489 | 11502 | 12150 | 12163 | 12176 | 12178 | 12193 |
| | | S/T | 0.52 | 0.61 | 0.69 | 0.69 | 0.79 | 0.55 | 0.65 | 0.74 | 0.74 | 0.84 | 0.59 | 0.69 | 0.78 | 0.78 | 0.89 | 0.62 | 0.73 | 0.83 | 0.83 | 0.94 |
| | | PI | 0.68 | 0.68 | 0.68 | 0.68 | 0.68 | 0.72 | 0.72 | 0.72 | 0.73 | 0.73 | 0.77 | 0.77 | 0.77 | 0.77 | 0.77 | 0.81 | 0.81 | 0.81 | 0.81 | 0.82 |

Manufacturer reserves the right to change, at any time, specifications and designs without notice and without obligations.

# COOLING PERFORMANCE DATA (HEAT PUMP) (CONTINUED)

| AIRFLOW (CFM) | OUTDOOR DB °F (°C) | ID WB °F (°C) | 60.8°F(16.0°C) | | | | | 64.4°F(18.0°C) | | | | | 67°F(19.4°C) | | | | | 71.6°F(22.0°C) | | | | |
|---|---|---|---|---|---|---|---|---|---|---|---|---|---|---|---|---|---|---|---|---|---|---|
| | | ID DB °F (°C) | 73.4°F (23.0°C) | 77.0°F (25.0°C) | 80.0°F (26.7°C) | 80.6°F (27.0°C) | 84.2°F (29.0°C) | 73.4°F (23.0°C) | 77.0°F (25.0°C) | 80.0°F (26.7°C) | 80.6°F (27.0°C) | 84.2°F (29.0°C) | 73.4°F (23.0°C) | 77.0°F (25.0°C) | 80.0°F (26.7°C) | 80.6°F (27.0°C) | 84.2°F (29.0°C) | 73.4°F (23.0°C) | 77.0°F (25.0°C) | 80.0°F (26.7°C) | 80.6°F (27.0°C) | 84.2°F (29.0°C) |
| 312 | 82°F (27.8°C) | TC | 10239 | 10253 | 10264 | 10264 | 10278 | 10856 | 10869 | 10880 | 10882 | 10895 | 11505 | 11520 | 11532 | 11535 | 11548 | 12198 | 12211 | 12224 | 12226 | 12242 |
| | | S/T | 0.53 | 0.62 | 0.70 | 0.70 | 0.80 | 0.56 | 0.66 | 0.75 | 0.75 | 0.85 | 0.59 | 0.70 | 0.79 | 0.79 | 0.90 | 0.63 | 0.74 | 0.84 | 0.84 | 0.95 |
| | | PI | 0.76 | 0.76 | 0.76 | 0.76 | 0.76 | 0.81 | 0.81 | 0.81 | 0.81 | 0.81 | 0.86 | 0.86 | 0.86 | 0.86 | 0.86 | 0.91 | 0.91 | 0.91 | 0.91 | 0.91 |
| | 86°F (30.0°C) | TC | 10508 | 10522 | 10533 | 10533 | 10548 | 11141 | 11154 | 11165 | 11167 | 11180 | 11806 | 11822 | 11835 | 11837 | 11850 | 12518 | 12531 | 12545 | 12547 | 12563 |
| | | S/T | 0.53 | 0.63 | 0.71 | 0.71 | 0.81 | 0.57 | 0.66 | 0.75 | 0.75 | 0.86 | 0.60 | 0.70 | 0.80 | 0.80 | 0.91 | 0.64 | 0.75 | 0.85 | 0.85 | 0.97 |
| | | PI | 0.89 | 0.90 | 0.90 | 0.90 | 0.90 | 0.95 | 0.95 | 0.95 | 0.95 | 0.95 | 1.00 | 1.01 | 1.01 | 1.01 | 1.01 | 1.07 | 1.07 | 1.07 | 1.07 | 1.07 |
| | 95°F (35.0°C) | TC | 11112 | 11127 | 11138 | 11139 | 11154 | 11781 | 11795 | 11807 | 11809 | 11823 | 12485 | 12501 | 12515 | 12518 | 12532 | 13237 | 13252 | 13266 | 13268 | 13285 |
| | | S/T | 0.53 | 0.63 | 0.71 | 0.71 | 0.81 | 0.57 | 0.66 | 0.75 | 0.75 | 0.86 | 0.60 | 0.70 | 0.80 | 0.80 | 0.91 | 0.64 | 0.75 | 0.85 | 0.85 | 0.97 |
| | | PI | 1.19 | 1.19 | 1.19 | 1.19 | 1.20 | 1.26 | 1.26 | 1.27 | 1.27 | 1.27 | 1.34 | 1.34 | 1.34 | 1.34 | 1.34 | 1.42 | 1.42 | 1.42 | 1.42 | 1.42 |
| | 104°F (40.0°C) | TC | 10218 | 10232 | 10243 | 10243 | 10257 | 10834 | 10847 | 10857 | 10859 | 10872 | 11481 | 11496 | 11509 | 11511 | 11524 | 12173 | 12186 | 12199 | 12201 | 12216 |
| | | S/T | 0.55 | 0.64 | 0.73 | 0.73 | 0.83 | 0.58 | 0.68 | 0.77 | 0.77 | 0.88 | 0.62 | 0.72 | 0.82 | 0.82 | 0.93 | 0.65 | 0.76 | 0.87 | 0.87 | 0.99 |
| | | PI | 1.18 | 1.18 | 1.18 | 1.18 | 1.19 | 1.25 | 1.25 | 1.26 | 1.26 | 1.26 | 1.33 | 1.33 | 1.33 | 1.33 | 1.33 | 1.41 | 1.41 | 1.41 | 1.41 | 1.41 |
| | 110°F (43.0°C) | TC | 9682 | 9695 | 9705 | 9706 | 9719 | 10265 | 10277 | 10288 | 10290 | 10302 | 10878 | 10893 | 10905 | 10907 | 10919 | 11534 | 11546 | 11559 | 11561 | 11575 |
| | | S/T | 0.57 | 0.67 | 0.76 | 0.76 | 0.86 | 0.60 | 0.71 | 0.80 | 0.80 | 0.91 | 0.64 | 0.75 | 0.85 | 0.85 | 0.97 | 0.68 | 0.79 | 0.90 | 0.90 | 1.00 |
| | | PI | 1.18 | 1.18 | 1.18 | 1.18 | 1.18 | 1.25 | 1.25 | 1.25 | 1.25 | 1.25 | 1.32 | 1.32 | 1.32 | 1.32 | 1.33 | 1.40 | 1.40 | 1.40 | 1.40 | 1.41 |
| | 115°F (46.0°C) | TC | 8529 | 8540 | 8549 | 8550 | 8561 | 9043 | 9053 | 9062 | 9064 | 9075 | 9583 | 9595 | 9606 | 9608 | 9619 | 10160 | 10171 | 10182 | 10184 | 10197 |
| | | S/T | 0.57 | 0.67 | 0.77 | 0.77 | 0.87 | 0.61 | 0.71 | 0.81 | 0.81 | 0.92 | 0.65 | 0.76 | 0.86 | 0.86 | 0.98 | 0.68 | 0.80 | 0.91 | 0.91 | 1.00 |
| | | PI | 1.04 | 1.04 | 1.04 | 1.04 | 1.04 | 1.10 | 1.10 | 1.10 | 1.11 | 1.11 | 1.17 | 1.17 | 1.17 | 1.17 | 1.17 | 1.24 | 1.24 | 1.24 | 1.24 | 1.24 |
| | 122°F (50.0°C) | TC | 6991 | 7001 | 7008 | 7009 | 7018 | 7413 | 7421 | 7429 | 7430 | 7439 | 7855 | 7866 | 7874 | 7876 | 7885 | 8329 | 8338 | 8347 | 8348 | 8359 |
| | | S/T | 0.59 | 0.69 | 0.78 | 0.78 | 0.89 | 0.62 | 0.73 | 0.83 | 0.83 | 0.95 | 0.66 | 0.77 | 0.88 | 0.88 | 1.00 | 0.70 | 0.82 | 0.93 | 0.93 | 1.00 |
| | | PI | 0.86 | 0.86 | 0.86 | 0.86 | 0.86 | 0.91 | 0.91 | 0.91 | 0.91 | 0.91 | 0.97 | 0.97 | 0.97 | 0.97 | 0.97 | 1.02 | 1.02 | 1.03 | 1.03 | 1.03 |
| 18k | | | | | | | | | | | | | | | | | | | | | | |
| 265 | 5°F (-15.0°C) | TC | 14692 | 14712 | 14727 | 14728 | 14748 | 15577 | 15596 | 15611 | 15614 | 15633 | 16508 | 16529 | 16548 | 16551 | 16569 | 17502 | 17522 | 17541 | 17543 | 17565 |
| | | S/T | 0.49 | 0.58 | 0.65 | 0.65 | 0.75 | 0.52 | 0.61 | 0.69 | 0.69 | 0.79 | 0.55 | 0.65 | 0.74 | 0.74 | 0.84 | 0.58 | 0.69 | 0.78 | 0.78 | 0.89 |
| | | PI | 0.53 | 0.53 | 0.53 | 0.53 | 0.53 | 0.56 | 0.56 | 0.56 | 0.56 | 0.56 | 0.59 | 0.59 | 0.59 | 0.59 | 0.59 | 0.63 | 0.63 | 0.63 | 0.63 | 0.63 |
| | 14°F (-10.0°C) | TC | 15121 | 15142 | 15158 | 15159 | 15179 | 16033 | 16052 | 16067 | 16071 | 16090 | 16990 | 17012 | 17031 | 17035 | 17054 | 18014 | 18034 | 18053 | 18056 | 18079 |
| | | S/T | 0.49 | 0.58 | 0.66 | 0.66 | 0.75 | 0.52 | 0.61 | 0.70 | 0.70 | 0.79 | 0.55 | 0.65 | 0.74 | 0.74 | 0.84 | 0.59 | 0.69 | 0.78 | 0.78 | 0.89 |
| | | PI | 0.50 | 0.50 | 0.50 | 0.50 | 0.50 | 0.53 | 0.53 | 0.53 | 0.53 | 0.53 | 0.56 | 0.56 | 0.57 | 0.57 | 0.57 | 0.60 | 0.60 | 0.60 | 0.60 | 0.60 |
| | 17°F (-8.3°C) | TC | 15264 | 15285 | 15301 | 15302 | 15323 | 16184 | 16203 | 16219 | 16223 | 16242 | 17151 | 17174 | 17193 | 17196 | 17215 | 18185 | 18204 | 18224 | 18227 | 18250 |
| | | S/T | 0.49 | 0.58 | 0.66 | 0.66 | 0.75 | 0.52 | 0.61 | 0.70 | 0.70 | 0.80 | 0.55 | 0.65 | 0.74 | 0.74 | 0.84 | 0.59 | 0.69 | 0.78 | 0.78 | 0.89 |
| | | PI | 0.49 | 0.50 | 0.50 | 0.50 | 0.50 | 0.52 | 0.52 | 0.53 | 0.53 | 0.53 | 0.56 | 0.56 | 0.56 | 0.56 | 0.56 | 0.59 | 0.59 | 0.59 | 0.59 | 0.59 |
| | 23°F (-5.0°C) | TC | 15192 | 15212 | 15229 | 15229 | 15250 | 16107 | 16127 | 16142 | 16146 | 16165 | 17070 | 17092 | 17111 | 17114 | 17133 | 18098 | 18118 | 18138 | 18141 | 18163 |
| | | S/T | 0.50 | 0.58 | 0.66 | 0.66 | 0.75 | 0.53 | 0.62 | 0.70 | 0.70 | 0.80 | 0.56 | 0.65 | 0.74 | 0.74 | 0.85 | 0.59 | 0.69 | 0.79 | 0.79 | 0.90 |
| | | PI | 0.50 | 0.50 | 0.50 | 0.50 | 0.50 | 0.53 | 0.53 | 0.53 | 0.53 | 0.53 | 0.56 | 0.56 | 0.56 | 0.56 | 0.56 | 0.59 | 0.60 | 0.60 | 0.60 | 0.60 |
| | 35°F (1.7°C) | TC | 15047 | 15067 | 15083 | 15084 | 15104 | 15954 | 15973 | 15988 | 15992 | 16011 | 16907 | 16929 | 16948 | 16951 | 16970 | 17926 | 17945 | 17965 | 17967 | 17990 |
| | | S/T | 0.50 | 0.58 | 0.66 | 0.66 | 0.76 | 0.53 | 0.62 | 0.70 | 0.70 | 0.80 | 0.56 | 0.66 | 0.75 | 0.75 | 0.85 | 0.59 | 0.70 | 0.79 | 0.79 | 0.90 |
| | | PI | 0.51 | 0.51 | 0.51 | 0.51 | 0.51 | 0.54 | 0.54 | 0.54 | 0.54 | 0.54 | 0.57 | 0.57 | 0.57 | 0.57 | 0.57 | 0.61 | 0.61 | 0.61 | 0.61 | 0.61 |
| | 41°F (5.0°C) | TC | 15052 | 15072 | 15088 | 15089 | 15109 | 15959 | 15978 | 15993 | 15997 | 16015 | 16912 | 16934 | 16953 | 16956 | 16975 | 17931 | 17951 | 17970 | 17973 | 17995 |
| | | S/T | 0.50 | 0.59 | 0.67 | 0.67 | 0.76 | 0.53 | 0.62 | 0.71 | 0.71 | 0.80 | 0.56 | 0.66 | 0.75 | 0.75 | 0.85 | 0.59 | 0.70 | 0.79 | 0.79 | 0.90 |
| | | PI | 0.59 | 0.59 | 0.59 | 0.59 | 0.59 | 0.62 | 0.62 | 0.62 | 0.62 | 0.62 | 0.66 | 0.66 | 0.66 | 0.66 | 0.66 | 0.70 | 0.70 | 0.70 | 0.70 | 0.70 |

Manufacturer reserves the right to change, at any time, specifications and designs without notice and without obligations.

# COOLING PERFORMANCE DATA (HEAT PUMP) (CONTINUED)

| AIRFLOW (CFM) | OUTDOOR DB °F (°C) | ID WB °F (°C) | 60.8°F(16.0°C) | | | | | 64.4°F(18.0°C) | | | | | 67°F(19.4°C) | | | | | 71.6°F(22.0°C) | | | | |
|---|---|---|---|---|---|---|---|---|---|---|---|---|---|---|---|---|---|---|---|---|---|---|
| | | ID DB °F (°C) | 73.4°F (23.0°C) | 77.0°F (25.0°C) | 80.0°F (26.7°C) | 80.6°F (27.0°C) | 84.2°F (29.0°C) | 73.4°F (23.0°C) | 77.0°F (25.0°C) | 80.0°F (26.7°C) | 80.6°F (27.0°C) | 84.2°F (29.0°C) | 73.4°F (23.0°C) | 77.0°F (25.0°C) | 80.0°F (26.7°C) | 80.6°F (27.0°C) | 84.2°F (29.0°C) | 73.4°F (23.0°C) | 77.0°F (25.0°C) | 80.0°F (26.7°C) | 80.6°F (27.0°C) | 84.2°F (29.0°C) |
| 265 | 47°F (8.3°C) | TC | 15056 | 15076 | 15093 | 15093 | 15114 | 15964 | 15982 | 15998 | 16001 | 16020 | 16917 | 16939 | 16958 | 16961 | 16980 | 17937 | 17956 | 17976 | 17978 | 18001 |
| | | S/T | 0.50 | 0.59 | 0.67 | 0.67 | 0.76 | 0.53 | 0.62 | 0.71 | 0.71 | 0.81 | 0.56 | 0.66 | 0.75 | 0.75 | 0.86 | 0.60 | 0.70 | 0.80 | 0.80 | 0.91 |
| | | PI | 0.66 | 0.66 | 0.66 | 0.66 | 0.66 | 0.70 | 0.70 | 0.70 | 0.70 | 0.70 | 0.74 | 0.74 | 0.74 | 0.75 | 0.75 | 0.79 | 0.79 | 0.79 | 0.79 | 0.79 |
| | 50°F (10.0°C) | TC | 15105 | 15125 | 15141 | 15142 | 15162 | 16015 | 16034 | 16050 | 16053 | 16072 | 16972 | 16994 | 17013 | 17016 | 17035 | 17994 | 18014 | 18033 | 18036 | 18059 |
| | | S/T | 0.50 | 0.59 | 0.67 | 0.67 | 0.77 | 0.53 | 0.63 | 0.71 | 0.71 | 0.81 | 0.57 | 0.66 | 0.75 | 0.75 | 0.86 | 0.60 | 0.70 | 0.80 | 0.80 | 0.91 |
| | | PI | 0.67 | 0.68 | 0.68 | 0.68 | 0.68 | 0.72 | 0.72 | 0.72 | 0.72 | 0.72 | 0.76 | 0.76 | 0.76 | 0.76 | 0.76 | 0.80 | 0.80 | 0.81 | 0.81 | 0.81 |
| | 59°F (15.0°C) | TC | 15250 | 15270 | 15287 | 15287 | 15308 | 16169 | 16188 | 16204 | 16207 | 16226 | 17135 | 17157 | 17176 | 17179 | 17198 | 18167 | 18187 | 18207 | 18209 | 18232 |
| | | S/T | 0.51 | 0.59 | 0.67 | 0.67 | 0.77 | 0.54 | 0.63 | 0.72 | 0.72 | 0.82 | 0.57 | 0.67 | 0.76 | 0.76 | 0.86 | 0.60 | 0.71 | 0.80 | 0.80 | 0.92 |
| | | PI | 0.71 | 0.71 | 0.72 | 0.72 | 0.72 | 0.76 | 0.76 | 0.76 | 0.76 | 0.76 | 0.80 | 0.80 | 0.80 | 0.80 | 0.80 | 0.85 | 0.85 | 0.85 | 0.85 | 0.85 |
| | 68°F (20.0°C) | TC | 15395 | 15415 | 15432 | 15433 | 15453 | 16322 | 16342 | 16358 | 16361 | 16380 | 17298 | 17320 | 17339 | 17343 | 17362 | 18340 | 18360 | 18380 | 18383 | 18405 |
| | | S/T | 0.52 | 0.61 | 0.69 | 0.69 | 0.79 | 0.55 | 0.65 | 0.73 | 0.73 | 0.84 | 0.58 | 0.68 | 0.78 | 0.78 | 0.89 | 0.62 | 0.73 | 0.83 | 0.83 | 0.94 |
| | | PI | 0.75 | 0.75 | 0.75 | 0.75 | 0.76 | 0.80 | 0.80 | 0.80 | 0.80 | 0.80 | 0.85 | 0.85 | 0.85 | 0.85 | 0.85 | 0.90 | 0.90 | 0.90 | 0.90 | 0.90 |
| | 77°F (25.0°C) | TC | 15540 | 15561 | 15577 | 15578 | 15599 | 16476 | 16496 | 16512 | 16515 | 16535 | 17461 | 17483 | 17503 | 17506 | 17525 | 18513 | 18533 | 18553 | 18556 | 18579 |
| | | S/T | 0.53 | 0.62 | 0.70 | 0.70 | 0.80 | 0.56 | 0.65 | 0.74 | 0.74 | 0.85 | 0.59 | 0.69 | 0.79 | 0.79 | 0.90 | 0.63 | 0.74 | 0.84 | 0.84 | 0.95 |
| | | PI | 0.79 | 0.79 | 0.79 | 0.79 | 0.79 | 0.84 | 0.84 | 0.84 | 0.84 | 0.84 | 0.89 | 0.89 | 0.89 | 0.89 | 0.89 | 0.94 | 0.94 | 0.95 | 0.95 | 0.95 |
| | 82°F (27.8°C) | TC | 15639 | 15660 | 15677 | 15678 | 15699 | 16582 | 16601 | 16618 | 16621 | 16641 | 17572 | 17595 | 17615 | 17618 | 17638 | 18631 | 18651 | 18672 | 18674 | 18698 |
| | | S/T | 0.53 | 0.63 | 0.71 | 0.71 | 0.81 | 0.57 | 0.66 | 0.75 | 0.75 | 0.86 | 0.60 | 0.70 | 0.80 | 0.80 | 0.91 | 0.63 | 0.74 | 0.85 | 0.85 | 0.96 |
| | | PI | 0.92 | 0.92 | 0.92 | 0.92 | 0.92 | 0.97 | 0.97 | 0.98 | 0.98 | 0.98 | 1.03 | 1.03 | 1.03 | 1.03 | 1.04 | 1.09 | 1.10 | 1.10 | 1.10 | 1.10 |
| | 86°F (30.0°C) | TC | 15742 | 15764 | 15781 | 15781 | 15803 | 16691 | 16711 | 16727 | 16731 | 16751 | 17688 | 17711 | 17731 | 17734 | 17754 | 18754 | 18774 | 18795 | 18798 | 18821 |
| | | S/T | 0.54 | 0.63 | 0.72 | 0.72 | 0.82 | 0.57 | 0.67 | 0.76 | 0.76 | 0.87 | 0.61 | 0.71 | 0.81 | 0.81 | 0.92 | 0.64 | 0.75 | 0.86 | 0.86 | 0.98 |
| | | PI | 1.15 | 1.15 | 1.15 | 1.15 | 1.16 | 1.22 | 1.22 | 1.22 | 1.22 | 1.23 | 1.29 | 1.30 | 1.30 | 1.30 | 1.30 | 1.37 | 1.37 | 1.37 | 1.37 | 1.38 |
| | 95°F (35.0°C) | TC | 15975 | 15996 | 16014 | 16014 | 16036 | 16938 | 16958 | 16974 | 16978 | 16998 | 17949 | 17973 | 17993 | 17996 | 18016 | 19031 | 19052 | 19072 | 19075 | 19099 |
| | | S/T | 0.54 | 0.63 | 0.72 | 0.72 | 0.82 | 0.57 | 0.67 | 0.76 | 0.76 | 0.87 | 0.61 | 0.71 | 0.81 | 0.81 | 0.92 | 0.64 | 0.75 | 0.86 | 0.86 | 0.98 |
| | | PI | 1.68 | 1.68 | 1.68 | 1.68 | 1.68 | 1.78 | 1.78 | 1.78 | 1.78 | 1.78 | 1.88 | 1.89 | 1.89 | 1.89 | 1.89 | 2.00 | 2.00 | 2.00 | 2.00 | 2.00 |
| | 104°F (40.0°C) | TC | 14067 | 14086 | 14101 | 14101 | 14120 | 14914 | 14932 | 14947 | 14950 | 14968 | 15806 | 15826 | 15844 | 15847 | 15864 | 16758 | 16776 | 16794 | 16797 | 16818 |
| | | S/T | 0.55 | 0.65 | 0.74 | 0.74 | 0.84 | 0.59 | 0.69 | 0.78 | 0.78 | 0.89 | 0.62 | 0.73 | 0.83 | 0.83 | 0.94 | 0.66 | 0.77 | 0.88 | 0.88 | 1.00 |
| | | PI | 1.65 | 1.65 | 1.65 | 1.65 | 1.65 | 1.74 | 1.75 | 1.75 | 1.75 | 1.75 | 1.85 | 1.85 | 1.85 | 1.85 | 1.86 | 1.96 | 1.96 | 1.96 | 1.96 | 1.97 |
| | 110°F (43.0°C) | TC | 12922 | 12939 | 12953 | 12954 | 12971 | 13701 | 13717 | 13730 | 13733 | 13749 | 14519 | 14538 | 14554 | 14557 | 14573 | 15394 | 15411 | 15428 | 15430 | 15449 |
| | | S/T | 0.57 | 0.67 | 0.76 | 0.76 | 0.87 | 0.61 | 0.71 | 0.81 | 0.81 | 0.92 | 0.64 | 0.76 | 0.86 | 0.86 | 0.98 | 0.68 | 0.80 | 0.91 | 0.91 | 1.00 |
| | | PI | 1.63 | 1.63 | 1.63 | 1.63 | 1.63 | 1.72 | 1.73 | 1.73 | 1.73 | 1.73 | 1.83 | 1.83 | 1.83 | 1.83 | 1.83 | 1.94 | 1.94 | 1.94 | 1.94 | 1.94 |
| | 115°F (46.0°C) | TC | 12136 | 12152 | 12165 | 12166 | 12182 | 12867 | 12882 | 12895 | 12897 | 12913 | 13636 | 13653 | 13669 | 13671 | 13686 | 14457 | 14473 | 14489 | 14491 | 14509 |
| | | S/T | 0.58 | 0.68 | 0.77 | 0.77 | 0.88 | 0.62 | 0.72 | 0.82 | 0.82 | 0.93 | 0.65 | 0.76 | 0.87 | 0.87 | 0.99 | 0.69 | 0.81 | 0.92 | 0.92 | 1.00 |
| | | PI | 1.52 | 1.52 | 1.52 | 1.52 | 1.52 | 1.61 | 1.61 | 1.61 | 1.61 | 1.61 | 1.71 | 1.71 | 1.71 | 1.71 | 1.71 | 1.81 | 1.81 | 1.81 | 1.81 | 1.81 |
| | 122°F (50.0°C) | TC | 11087 | 11102 | 11114 | 11114 | 11129 | 11755 | 11769 | 11781 | 11783 | 11797 | 12458 | 12474 | 12488 | 12490 | 12504 | 13208 | 13222 | 13237 | 13239 | 13255 |
| | | S/T | 0.59 | 0.70 | 0.79 | 0.79 | 0.90 | 0.63 | 0.74 | 0.84 | 0.84 | 0.96 | 0.67 | 0.78 | 0.89 | 0.89 | 1.00 | 0.71 | 0.83 | 0.94 | 0.94 | 1.00 |
| | | PI | 1.37 | 1.37 | 1.38 | 1.38 | 1.38 | 1.46 | 1.46 | 1.46 | 1.46 | 1.46 | 1.54 | 1.54 | 1.55 | 1.55 | 1.55 | 1.64 | 1.64 | 1.64 | 1.64 | 1.64 |

Manufacturer reserves the right to change, at any time, specifications and designs without notice and without obligations.

# COOLING PERFORMANCE DATA (HEAT PUMP) (CONTINUED)

| AIRFLOW (CFM) | OUTDOOR DB °F (°C) | ID WB °F (°C) | 60.8°F(16.0°C) | | | | | 64.4°F(18.0°C) | | | | | 67°F(19.4°C) | | | | | 71.6°F(22.0°C) | | | | |
|---|---|---|---|---|---|---|---|---|---|---|---|---|---|---|---|---|---|---|---|---|---|---|
| | | ID DB °F (°C) | 73.4°F (23.0°C) | 77.0°F (25.0°C) | 80.0°F (26.7°C) | 80.6°F (27.0°C) | 84.2°F (29.0°C) | 73.4°F (23.0°C) | 77.0°F (25.0°C) | 80.0°F (26.7°C) | 80.6°F (27.0°C) | 84.2°F (29.0°C) | 73.4°F (23.0°C) | 77.0°F (25.0°C) | 80.0°F (26.7°C) | 80.6°F (27.0°C) | 84.2°F (29.0°C) | 73.4°F (23.0°C) | 77.0°F (25.0°C) | 80.0°F (26.7°C) | 80.6°F (27.0°C) | 84.2°F (29.0°C) |
| 359 | 5°F (-15.0°C) | TC | 14639 | 14659 | 14675 | 14675 | 14695 | 15521 | 15540 | 15555 | 15558 | 15577 | 16449 | 16470 | 16489 | 16492 | 16510 | 17440 | 17459 | 17478 | 17481 | 17502 |
| | | S/T | 0.49 | 0.57 | 0.65 | 0.65 | 0.74 | 0.52 | 0.61 | 0.69 | 0.69 | 0.79 | 0.55 | 0.65 | 0.73 | 0.73 | 0.84 | 0.58 | 0.68 | 0.78 | 0.78 | 0.89 |
| | | PI | 0.52 | 0.52 | 0.52 | 0.52 | 0.53 | 0.55 | 0.56 | 0.56 | 0.56 | 0.56 | 0.59 | 0.59 | 0.59 | 0.59 | 0.59 | 0.62 | 0.62 | 0.62 | 0.62 | 0.63 |
| | 14°F (-10.0°C) | TC | 15067 | 15087 | 15104 | 15104 | 15125 | 15975 | 15994 | 16010 | 16013 | 16032 | 16930 | 16952 | 16970 | 16974 | 16993 | 17950 | 17969 | 17989 | 17992 | 18014 |
| | | S/T | 0.49 | 0.58 | 0.65 | 0.65 | 0.75 | 0.52 | 0.61 | 0.69 | 0.69 | 0.79 | 0.55 | 0.65 | 0.73 | 0.73 | 0.84 | 0.58 | 0.69 | 0.78 | 0.78 | 0.89 |
| | | PI | 0.50 | 0.50 | 0.50 | 0.50 | 0.50 | 0.53 | 0.53 | 0.53 | 0.53 | 0.53 | 0.56 | 0.56 | 0.56 | 0.56 | 0.56 | 0.60 | 0.60 | 0.60 | 0.60 | 0.60 |
| | 17°F (-8.3°C) | TC | 15210 | 15230 | 15247 | 15247 | 15268 | 16126 | 16146 | 16161 | 16165 | 16184 | 17090 | 17112 | 17131 | 17134 | 17153 | 18120 | 18139 | 18159 | 18162 | 18184 |
| | | S/T | 0.49 | 0.58 | 0.66 | 0.66 | 0.75 | 0.52 | 0.61 | 0.69 | 0.70 | 0.79 | 0.55 | 0.65 | 0.74 | 0.74 | 0.84 | 0.59 | 0.69 | 0.78 | 0.78 | 0.89 |
| | | PI | 0.49 | 0.49 | 0.49 | 0.49 | 0.49 | 0.52 | 0.52 | 0.52 | 0.52 | 0.52 | 0.55 | 0.55 | 0.55 | 0.56 | 0.56 | 0.59 | 0.59 | 0.59 | 0.59 | 0.59 |
| | 23°F (-5.0°C) | TC | 15138 | 15158 | 15174 | 15175 | 15195 | 16050 | 16069 | 16085 | 16088 | 16107 | 17009 | 17031 | 17050 | 17053 | 17072 | 18034 | 18053 | 18073 | 18076 | 18098 |
| | | S/T | 0.49 | 0.58 | 0.66 | 0.66 | 0.75 | 0.52 | 0.61 | 0.70 | 0.70 | 0.80 | 0.56 | 0.65 | 0.74 | 0.74 | 0.84 | 0.59 | 0.69 | 0.78 | 0.78 | 0.89 |
| | | PI | 0.50 | 0.50 | 0.50 | 0.50 | 0.50 | 0.53 | 0.53 | 0.53 | 0.53 | 0.53 | 0.56 | 0.56 | 0.56 | 0.56 | 0.56 | 0.59 | 0.59 | 0.59 | 0.59 | 0.59 |
| | 35°F (1.7°C) | TC | 14993 | 15013 | 15030 | 15030 | 15050 | 15897 | 15916 | 15931 | 15934 | 15953 | 16846 | 16868 | 16887 | 16890 | 16909 | 17862 | 17881 | 17900 | 17903 | 17925 |
| | | S/T | 0.50 | 0.58 | 0.66 | 0.66 | 0.75 | 0.53 | 0.62 | 0.70 | 0.70 | 0.80 | 0.56 | 0.65 | 0.74 | 0.74 | 0.85 | 0.59 | 0.69 | 0.79 | 0.79 | 0.90 |
| | | PI | 0.51 | 0.51 | 0.51 | 0.51 | 0.51 | 0.54 | 0.54 | 0.54 | 0.54 | 0.54 | 0.57 | 0.57 | 0.57 | 0.57 | 0.57 | 0.60 | 0.60 | 0.61 | 0.61 | 0.61 |
| | 41°F (5.0°C) | TC | 14998 | 15018 | 15034 | 15035 | 15055 | 15902 | 15920 | 15936 | 15939 | 15958 | 16852 | 16874 | 16892 | 16895 | 16914 | 17867 | 17886 | 17906 | 17909 | 17931 |
| | | S/T | 0.50 | 0.58 | 0.66 | 0.66 | 0.76 | 0.53 | 0.62 | 0.70 | 0.70 | 0.80 | 0.56 | 0.66 | 0.75 | 0.75 | 0.85 | 0.59 | 0.70 | 0.79 | 0.79 | 0.90 |
| | | PI | 0.58 | 0.58 | 0.58 | 0.58 | 0.59 | 0.62 | 0.62 | 0.62 | 0.62 | 0.62 | 0.66 | 0.66 | 0.66 | 0.66 | 0.66 | 0.69 | 0.70 | 0.70 | 0.70 | 0.70 |
| | 47°F (8.3°C) | TC | 15002 | 15023 | 15039 | 15039 | 15060 | 15906 | 15925 | 15941 | 15944 | 15963 | 16857 | 16879 | 16897 | 16901 | 16919 | 17872 | 17892 | 17911 | 17914 | 17936 |
| | | S/T | 0.50 | 0.59 | 0.67 | 0.67 | 0.76 | 0.53 | 0.62 | 0.71 | 0.71 | 0.80 | 0.56 | 0.66 | 0.75 | 0.75 | 0.85 | 0.59 | 0.70 | 0.79 | 0.79 | 0.90 |
| | | PI | 0.66 | 0.66 | 0.66 | 0.66 | 0.66 | 0.70 | 0.70 | 0.70 | 0.70 | 0.70 | 0.74 | 0.74 | 0.74 | 0.74 | 0.74 | 0.79 | 0.79 | 0.79 | 0.79 | 0.79 |
| | 50°F (10.0°C) | TC | 15051 | 15071 | 15087 | 15088 | 15108 | 15958 | 15976 | 15992 | 15995 | 16014 | 16911 | 16933 | 16952 | 16955 | 16974 | 17930 | 17949 | 17969 | 17972 | 17994 |
| | | S/T | 0.50 | 0.59 | 0.67 | 0.67 | 0.76 | 0.53 | 0.62 | 0.71 | 0.71 | 0.81 | 0.56 | 0.66 | 0.75 | 0.75 | 0.86 | 0.60 | 0.70 | 0.80 | 0.80 | 0.91 |
| | | PI | 0.67 | 0.67 | 0.67 | 0.67 | 0.67 | 0.71 | 0.71 | 0.71 | 0.71 | 0.72 | 0.76 | 0.76 | 0.76 | 0.76 | 0.76 | 0.80 | 0.80 | 0.80 | 0.80 | 0.80 |
| | 59°F (15.0°C) | TC | 15195 | 15215 | 15232 | 15233 | 15253 | 16111 | 16130 | 16146 | 16149 | 16168 | 17073 | 17095 | 17115 | 17118 | 17137 | 18102 | 18122 | 18141 | 18144 | 18167 |
| | | S/T | 0.50 | 0.59 | 0.67 | 0.67 | 0.77 | 0.53 | 0.63 | 0.71 | 0.71 | 0.81 | 0.57 | 0.66 | 0.76 | 0.76 | 0.86 | 0.60 | 0.70 | 0.80 | 0.80 | 0.91 |
| | | PI | 0.71 | 0.71 | 0.71 | 0.71 | 0.71 | 0.75 | 0.75 | 0.76 | 0.76 | 0.76 | 0.80 | 0.80 | 0.80 | 0.80 | 0.80 | 0.85 | 0.85 | 0.85 | 0.85 | 0.85 |
| | 68°F (20.0°C) | TC | 15340 | 15360 | 15377 | 15377 | 15398 | 16264 | 16283 | 16299 | 16303 | 16322 | 17236 | 17258 | 17277 | 17281 | 17300 | 18274 | 18294 | 18314 | 18317 | 18340 |
| | | S/T | 0.52 | 0.61 | 0.69 | 0.69 | 0.79 | 0.55 | 0.64 | 0.73 | 0.73 | 0.83 | 0.58 | 0.68 | 0.78 | 0.78 | 0.88 | 0.62 | 0.72 | 0.82 | 0.82 | 0.94 |
| | | PI | 0.75 | 0.75 | 0.75 | 0.75 | 0.75 | 0.80 | 0.80 | 0.80 | 0.80 | 0.80 | 0.84 | 0.84 | 0.84 | 0.84 | 0.85 | 0.89 | 0.89 | 0.90 | 0.90 | 0.90 |
| | 77°F (25.0°C) | TC | 15484 | 15505 | 15522 | 15522 | 15543 | 16417 | 16437 | 16453 | 16456 | 16476 | 17398 | 17421 | 17440 | 17443 | 17463 | 18446 | 18466 | 18486 | 18489 | 18512 |
| | | S/T | 0.52 | 0.62 | 0.70 | 0.70 | 0.80 | 0.56 | 0.65 | 0.74 | 0.74 | 0.84 | 0.59 | 0.69 | 0.79 | 0.79 | 0.90 | 0.62 | 0.73 | 0.83 | 0.83 | 0.95 |
| | | PI | 0.79 | 0.79 | 0.79 | 0.79 | 0.79 | 0.84 | 0.84 | 0.84 | 0.84 | 0.84 | 0.89 | 0.89 | 0.89 | 0.89 | 0.89 | 0.94 | 0.94 | 0.94 | 0.94 | 0.94 |
| | 82°F (27.8°C) | TC | 15583 | 15604 | 15621 | 15622 | 15643 | 16522 | 16542 | 16558 | 16561 | 16581 | 17509 | 17532 | 17552 | 17555 | 17575 | 18564 | 18585 | 18605 | 18608 | 18631 |
| | | S/T | 0.53 | 0.62 | 0.71 | 0.71 | 0.81 | 0.56 | 0.66 | 0.75 | 0.75 | 0.86 | 0.60 | 0.70 | 0.80 | 0.80 | 0.91 | 0.63 | 0.74 | 0.84 | 0.84 | 0.96 |
| | | PI | 0.91 | 0.92 | 0.92 | 0.92 | 0.92 | 0.97 | 0.97 | 0.97 | 0.97 | 0.97 | 1.03 | 1.03 | 1.03 | 1.03 | 1.03 | 1.09 | 1.09 | 1.09 | 1.09 | 1.09 |
| | 86°F (30.0°C) | TC | 15686 | 15707 | 15724 | 15725 | 15746 | 16631 | 16651 | 16668 | 16671 | 16691 | 17625 | 17648 | 17668 | 17671 | 17691 | 18687 | 18707 | 18728 | 18731 | 18754 |
| | | S/T | 0.54 | 0.63 | 0.72 | 0.72 | 0.82 | 0.57 | 0.67 | 0.76 | 0.76 | 0.87 | 0.60 | 0.71 | 0.81 | 0.81 | 0.92 | 0.64 | 0.75 | 0.85 | 0.85 | 0.97 |
| | | PI | 1.15 | 1.15 | 1.15 | 1.15 | 1.15 | 1.22 | 1.22 | 1.22 | 1.22 | 1.22 | 1.29 | 1.29 | 1.29 | 1.29 | 1.29 | 1.37 | 1.37 | 1.37 | 1.37 | 1.37 |

Manufacturer reserves the right to change, at any time, specifications and designs without notice and without obligations.

# COOLING PERFORMANCE DATA (HEAT PUMP) (CONTINUED)

| AIRFLOW (CFM) | OUTDOOR DB °F (°C) | ID WB °F (°C) | 60.8°F(16.0°C) | | | | | 64.4°F(18.0°C) | | | | | 67°F(19.4°C) | | | | | 71.6°F(22.0°C) | | | | |
|---|---|---|---|---|---|---|---|---|---|---|---|---|---|---|---|---|---|---|---|---|---|---|
| | | ID DB °F (°C) | 73.4°F (23.0°C) | 77.0°F (25.0°C) | 80.0°F (26.7°C) | 80.6°F (27.0°C) | 84.2°F (29.0°C) | 73.4°F (23.0°C) | 77.0°F (25.0°C) | 80.0°F (26.7°C) | 80.6°F (27.0°C) | 84.2°F (29.0°C) | 73.4°F (23.0°C) | 77.0°F (25.0°C) | 80.0°F (26.7°C) | 80.6°F (27.0°C) | 84.2°F (29.0°C) | 73.4°F (23.0°C) | 77.0°F (25.0°C) | 80.0°F (26.7°C) | 80.6°F (27.0°C) | 84.2°F (29.0°C) |
| 359 | 95°F (35.0°C) | TC | 15918 | 15939 | 15956 | 15957 | 15978 | 16877 | 16897 | 16914 | 16917 | 16937 | 17885 | 17908 | 17928 | 17932 | 17952 | 18963 | 18983 | 19004 | 19007 | 19031 |
| | | S/T | 0.54 | 0.63 | 0.72 | 0.72 | 0.82 | 0.57 | 0.67 | 0.76 | 0.76 | 0.87 | 0.60 | 0.71 | 0.81 | 0.81 | 0.92 | 0.64 | 0.75 | 0.85 | 0.85 | 0.97 |
| | | PI | 1.67 | 1.67 | 1.67 | 1.67 | 1.68 | 1.77 | 1.77 | 1.77 | 1.78 | 1.78 | 1.88 | 1.88 | 1.88 | 1.88 | 1.88 | 1.99 | 1.99 | 1.99 | 1.99 | 2.00 |
| | 104°F (40.0°C) | TC | 14016 | 14035 | 14050 | 14051 | 14070 | 14861 | 14879 | 14893 | 14896 | 14914 | 15749 | 15769 | 15787 | 15790 | 15808 | 16698 | 16716 | 16734 | 16737 | 16758 |
| | | S/T | 0.55 | 0.65 | 0.74 | 0.74 | 0.84 | 0.58 | 0.69 | 0.78 | 0.78 | 0.89 | 0.62 | 0.73 | 0.83 | 0.83 | 0.94 | 0.66 | 0.77 | 0.88 | 0.88 | 1.00 |
| | | PI | 1.64 | 1.64 | 1.64 | 1.64 | 1.65 | 1.74 | 1.74 | 1.74 | 1.74 | 1.74 | 1.84 | 1.84 | 1.85 | 1.85 | 1.85 | 1.95 | 1.95 | 1.96 | 1.96 | 1.96 |
| | 110°F (43.0°C) | TC | 12876 | 12893 | 12907 | 12907 | 12925 | 13652 | 13668 | 13681 | 13684 | 13700 | 14467 | 14486 | 14502 | 14505 | 14521 | 15339 | 15356 | 15372 | 15375 | 15394 |
| | | S/T | 0.57 | 0.67 | 0.76 | 0.76 | 0.87 | 0.61 | 0.71 | 0.81 | 0.81 | 0.92 | 0.64 | 0.75 | 0.86 | 0.86 | 0.98 | 0.68 | 0.80 | 0.91 | 0.91 | 1.00 |
| | | PI | 1.62 | 1.62 | 1.62 | 1.62 | 1.63 | 1.72 | 1.72 | 1.72 | 1.72 | 1.72 | 1.82 | 1.82 | 1.83 | 1.83 | 1.83 | 1.93 | 1.93 | 1.93 | 1.93 | 1.94 |
| | 115°F (46.0°C) | TC | 12092 | 12108 | 12121 | 12122 | 12138 | 12821 | 12836 | 12849 | 12851 | 12867 | 13587 | 13605 | 13620 | 13622 | 13637 | 14405 | 14421 | 14437 | 14439 | 14457 |
| | | S/T | 0.58 | 0.68 | 0.77 | 0.77 | 0.88 | 0.61 | 0.72 | 0.82 | 0.82 | 0.93 | 0.65 | 0.76 | 0.87 | 0.87 | 0.99 | 0.69 | 0.81 | 0.92 | 0.92 | 1.00 |
| | | PI | 1.51 | 1.51 | 1.52 | 1.52 | 1.52 | 1.60 | 1.61 | 1.61 | 1.61 | 1.61 | 1.70 | 1.70 | 1.70 | 1.70 | 1.71 | 1.80 | 1.80 | 1.81 | 1.81 | 1.81 |
| | 122°F (50.0°C) | TC | 11047 | 11062 | 11074 | 11075 | 11090 | 11713 | 11727 | 11739 | 11741 | 11755 | 12413 | 12429 | 12443 | 12445 | 12459 | 13161 | 13175 | 13190 | 13192 | 13208 |
| | | S/T | 0.59 | 0.69 | 0.79 | 0.79 | 0.90 | 0.63 | 0.74 | 0.84 | 0.84 | 0.95 | 0.66 | 0.78 | 0.89 | 0.89 | 1.00 | 0.70 | 0.83 | 0.94 | 0.94 | 1.00 |
| | | PI | 1.37 | 1.37 | 1.37 | 1.37 | 1.37 | 1.45 | 1.45 | 1.45 | 1.45 | 1.46 | 1.54 | 1.54 | 1.54 | 1.54 | 1.54 | 1.63 | 1.63 | 1.63 | 1.63 | 1.64 |
| 447 | 5°F (-15.0°C) | TC | 14587 | 14607 | 14622 | 14623 | 14643 | 15466 | 15484 | 15500 | 15503 | 15521 | 16390 | 16411 | 16430 | 16433 | 16451 | 17377 | 17396 | 17415 | 17418 | 17440 |
| | | S/T | 0.49 | 0.57 | 0.65 | 0.65 | 0.74 | 0.52 | 0.61 | 0.69 | 0.69 | 0.79 | 0.55 | 0.64 | 0.73 | 0.73 | 0.83 | 0.58 | 0.68 | 0.77 | 0.77 | 0.88 |
| | | PI | 0.52 | 0.52 | 0.52 | 0.52 | 0.52 | 0.55 | 0.55 | 0.55 | 0.55 | 0.55 | 0.59 | 0.59 | 0.59 | 0.59 | 0.59 | 0.62 | 0.62 | 0.62 | 0.62 | 0.62 |
| | 14°F (-10.0°C) | TC | 15013 | 15033 | 15050 | 15050 | 15071 | 15918 | 15937 | 15953 | 15956 | 15975 | 16869 | 16891 | 16910 | 16913 | 16932 | 17885 | 17905 | 17924 | 17927 | 17949 |
| | | S/T | 0.49 | 0.57 | 0.65 | 0.65 | 0.74 | 0.52 | 0.61 | 0.69 | 0.69 | 0.79 | 0.55 | 0.64 | 0.73 | 0.73 | 0.83 | 0.58 | 0.68 | 0.78 | 0.78 | 0.88 |
| | | PI | 0.50 | 0.50 | 0.50 | 0.50 | 0.50 | 0.53 | 0.53 | 0.53 | 0.53 | 0.53 | 0.56 | 0.56 | 0.56 | 0.56 | 0.56 | 0.59 | 0.59 | 0.60 | 0.60 | 0.60 |
| | 17°F (-8.3°C) | TC | 15155 | 15176 | 15192 | 15193 | 15213 | 16069 | 16088 | 16104 | 16107 | 16126 | 17029 | 17051 | 17070 | 17073 | 17092 | 18055 | 18074 | 18094 | 18097 | 18119 |
| | | S/T | 0.49 | 0.57 | 0.65 | 0.65 | 0.74 | 0.52 | 0.61 | 0.69 | 0.69 | 0.79 | 0.55 | 0.65 | 0.73 | 0.73 | 0.84 | 0.58 | 0.68 | 0.78 | 0.78 | 0.89 |
| | | PI | 0.49 | 0.49 | 0.49 | 0.49 | 0.49 | 0.52 | 0.52 | 0.52 | 0.52 | 0.52 | 0.55 | 0.55 | 0.55 | 0.55 | 0.55 | 0.58 | 0.59 | 0.59 | 0.59 | 0.59 |
| | 23°F (-5.0°C) | TC | 15083 | 15104 | 15120 | 15121 | 15141 | 15992 | 16011 | 16027 | 16030 | 16049 | 16948 | 16970 | 16989 | 16992 | 17011 | 17969 | 17989 | 18008 | 18011 | 18033 |
| | | S/T | 0.49 | 0.58 | 0.66 | 0.66 | 0.75 | 0.52 | 0.61 | 0.70 | 0.70 | 0.79 | 0.55 | 0.65 | 0.74 | 0.74 | 0.84 | 0.59 | 0.69 | 0.78 | 0.78 | 0.89 |
| | | PI | 0.50 | 0.50 | 0.50 | 0.50 | 0.50 | 0.53 | 0.53 | 0.53 | 0.53 | 0.53 | 0.56 | 0.56 | 0.56 | 0.56 | 0.56 | 0.59 | 0.59 | 0.59 | 0.59 | 0.59 |
| | 35°F (1.7°C) | TC | 14940 | 14960 | 14976 | 14976 | 14997 | 15840 | 15859 | 15874 | 15877 | 15896 | 16786 | 16808 | 16827 | 16830 | 16849 | 17798 | 17817 | 17836 | 17839 | 17861 |
| | | S/T | 0.49 | 0.58 | 0.66 | 0.66 | 0.75 | 0.52 | 0.62 | 0.70 | 0.70 | 0.80 | 0.56 | 0.65 | 0.74 | 0.74 | 0.85 | 0.59 | 0.69 | 0.79 | 0.79 | 0.90 |
| | | PI | 0.51 | 0.51 | 0.51 | 0.51 | 0.51 | 0.54 | 0.54 | 0.54 | 0.54 | 0.54 | 0.57 | 0.57 | 0.57 | 0.57 | 0.57 | 0.60 | 0.60 | 0.60 | 0.60 | 0.60 |
| | 41°F (5.0°C) | TC | 14944 | 14964 | 14980 | 14981 | 15001 | 15845 | 15863 | 15879 | 15882 | 15901 | 16791 | 16813 | 16832 | 16835 | 16854 | 17803 | 17822 | 17842 | 17845 | 17867 |
| | | S/T | 0.50 | 0.58 | 0.66 | 0.66 | 0.75 | 0.53 | 0.62 | 0.70 | 0.70 | 0.80 | 0.56 | 0.65 | 0.74 | 0.74 | 0.85 | 0.59 | 0.69 | 0.79 | 0.79 | 0.90 |
| | | PI | 0.58 | 0.58 | 0.58 | 0.58 | 0.58 | 0.62 | 0.62 | 0.62 | 0.62 | 0.62 | 0.65 | 0.65 | 0.65 | 0.65 | 0.66 | 0.69 | 0.69 | 0.69 | 0.69 | 0.69 |
| | 47°F (8.3°C) | TC | 14949 | 14969 | 14985 | 14986 | 15006 | 15850 | 15868 | 15884 | 15887 | 15906 | 16796 | 16818 | 16837 | 16840 | 16859 | 17808 | 17828 | 17847 | 17850 | 17872 |
| | | S/T | 0.50 | 0.58 | 0.66 | 0.66 | 0.76 | 0.53 | 0.62 | 0.70 | 0.70 | 0.80 | 0.56 | 0.66 | 0.75 | 0.75 | 0.85 | 0.59 | 0.70 | 0.79 | 0.79 | 0.90 |
| | | PI | 0.66 | 0.66 | 0.66 | 0.66 | 0.66 | 0.70 | 0.70 | 0.70 | 0.70 | 0.70 | 0.74 | 0.74 | 0.74 | 0.74 | 0.74 | 0.78 | 0.78 | 0.78 | 0.78 | 0.79 |
| | 50°F (10.0°C) | TC | 14997 | 15017 | 15033 | 15034 | 15054 | 15900 | 15919 | 15935 | 15938 | 15957 | 16850 | 16872 | 16891 | 16894 | 16913 | 17866 | 17885 | 17905 | 17907 | 17930 |
| | | S/T | 0.50 | 0.59 | 0.67 | 0.67 | 0.76 | 0.53 | 0.62 | 0.71 | 0.71 | 0.81 | 0.56 | 0.66 | 0.75 | 0.75 | 0.85 | 0.60 | 0.70 | 0.79 | 0.79 | 0.91 |
| | | PI | 0.67 | 0.67 | 0.67 | 0.67 | 0.67 | 0.71 | 0.71 | 0.71 | 0.71 | 0.71 | 0.75 | 0.75 | 0.75 | 0.75 | 0.76 | 0.80 | 0.80 | 0.80 | 0.80 | 0.80 |

Manufacturer reserves the right to change, at any time, specifications and designs without notice and without obligations.

# COOLING PERFORMANCE DATA (HEAT PUMP) (CONTINUED)

| AIRFLOW (CFM) | OUTDOOR DB °F (°C) | ID WB °F (°C) | 60.8°F(16.0°C) | | | | | 64.4°F(18.0°C) | | | | | 67°F(19.4°C) | | | | | 71.6°F(22.0°C) | | | | |
|---|---|---|---|---|---|---|---|---|---|---|---|---|---|---|---|---|---|---|---|---|---|---|
| | | ID DB °F (°C) | 73.4°F (23.0°C) | 77.0°F (25.0°C) | 80.0°F (26.7°C) | 80.6°F (27.0°C) | 84.2°F (29.0°C) | 73.4°F (23.0°C) | 77.0°F (25.0°C) | 80.0°F (26.7°C) | 80.6°F (27.0°C) | 84.2°F (29.0°C) | 73.4°F (23.0°C) | 77.0°F (25.0°C) | 80.0°F (26.7°C) | 80.6°F (27.0°C) | 84.2°F (29.0°C) | 73.4°F (23.0°C) | 77.0°F (25.0°C) | 80.0°F (26.7°C) | 80.6°F (27.0°C) | 84.2°F (29.0°C) |
| 447 | 59°F (15.0°C) | TC | 15141 | 15161 | 15177 | 15178 | 15199 | 16053 | 16072 | 16088 | 16091 | 16110 | 17012 | 17034 | 17053 | 17056 | 17076 | 18037 | 18057 | 18076 | 18079 | 18102 |
| | | S/T | 0.50 | 0.59 | 0.67 | 0.67 | 0.76 | 0.53 | 0.62 | 0.71 | 0.71 | 0.81 | 0.56 | 0.66 | 0.75 | 0.75 | 0.86 | 0.60 | 0.70 | 0.80 | 0.80 | 0.91 |
| | | PI | 0.71 | 0.71 | 0.71 | 0.71 | 0.71 | 0.75 | 0.75 | 0.75 | 0.75 | 0.75 | 0.80 | 0.80 | 0.80 | 0.80 | 0.80 | 0.84 | 0.84 | 0.85 | 0.85 | 0.85 |
| | 68°F (20.0°C) | TC | 15285 | 15305 | 15322 | 15322 | 15343 | 16206 | 16225 | 16241 | 16244 | 16264 | 17174 | 17196 | 17215 | 17219 | 17238 | 18209 | 18229 | 18248 | 18251 | 18274 |
| | | S/T | 0.52 | 0.61 | 0.69 | 0.69 | 0.78 | 0.55 | 0.64 | 0.73 | 0.73 | 0.83 | 0.58 | 0.68 | 0.77 | 0.77 | 0.88 | 0.61 | 0.72 | 0.82 | 0.82 | 0.93 |
| | | PI | 0.75 | 0.75 | 0.75 | 0.75 | 0.75 | 0.79 | 0.79 | 0.79 | 0.79 | 0.80 | 0.84 | 0.84 | 0.84 | 0.84 | 0.84 | 0.89 | 0.89 | 0.89 | 0.89 | 0.89 |
| | 77°F (25.0°C) | TC | 15429 | 15449 | 15466 | 15467 | 15488 | 16359 | 16378 | 16394 | 16397 | 16417 | 17336 | 17358 | 17378 | 17381 | 17400 | 18380 | 18400 | 18420 | 18423 | 18446 |
| | | S/T | 0.52 | 0.61 | 0.70 | 0.70 | 0.79 | 0.55 | 0.65 | 0.74 | 0.74 | 0.84 | 0.59 | 0.69 | 0.78 | 0.78 | 0.89 | 0.62 | 0.73 | 0.83 | 0.83 | 0.95 |
| | | PI | 0.79 | 0.79 | 0.79 | 0.79 | 0.79 | 0.83 | 0.83 | 0.84 | 0.84 | 0.84 | 0.88 | 0.88 | 0.89 | 0.89 | 0.89 | 0.94 | 0.94 | 0.94 | 0.94 | 0.94 |
| | 82°F (27.8°C) | TC | 15527 | 15548 | 15565 | 15566 | 15587 | 16463 | 16483 | 16499 | 16502 | 16522 | 17447 | 17469 | 17489 | 17492 | 17512 | 18498 | 18518 | 18538 | 18541 | 18564 |
| | | S/T | 0.53 | 0.62 | 0.71 | 0.71 | 0.80 | 0.56 | 0.66 | 0.75 | 0.75 | 0.85 | 0.59 | 0.70 | 0.79 | 0.79 | 0.90 | 0.63 | 0.74 | 0.84 | 0.84 | 0.96 |
| | | PI | 0.91 | 0.91 | 0.91 | 0.91 | 0.92 | 0.97 | 0.97 | 0.97 | 0.97 | 0.97 | 1.02 | 1.03 | 1.03 | 1.03 | 1.03 | 1.09 | 1.09 | 1.09 | 1.09 | 1.09 |
| | 86°F (30.0°C) | TC | 15630 | 15651 | 15668 | 15669 | 15690 | 16572 | 16592 | 16608 | 16611 | 16631 | 17562 | 17585 | 17604 | 17608 | 17627 | 18620 | 18640 | 18661 | 18664 | 18687 |
| | | S/T | 0.54 | 0.63 | 0.71 | 0.71 | 0.81 | 0.57 | 0.67 | 0.76 | 0.76 | 0.86 | 0.60 | 0.71 | 0.80 | 0.80 | 0.92 | 0.64 | 0.75 | 0.85 | 0.85 | 0.97 |
| | | PI | 1.14 | 1.14 | 1.15 | 1.15 | 1.15 | 1.21 | 1.21 | 1.21 | 1.22 | 1.22 | 1.28 | 1.29 | 1.29 | 1.29 | 1.29 | 1.36 | 1.36 | 1.36 | 1.37 | 1.37 |
| | 95°F (35.0°C) | TC | 15861 | 15882 | 15899 | 15900 | 15921 | 16817 | 16836 | 16853 | 16856 | 16876 | 17821 | 17844 | 17864 | 17868 | 17888 | 18895 | 18916 | 18936 | 18939 | 18963 |
| | | S/T | 0.54 | 0.63 | 0.71 | 0.71 | 0.81 | 0.57 | 0.67 | 0.76 | 0.76 | 0.86 | 0.60 | 0.71 | 0.80 | 0.80 | 0.92 | 0.64 | 0.75 | 0.85 | 0.85 | 0.97 |
| | | PI | 1.66 | 1.67 | 1.67 | 1.67 | 1.67 | 1.76 | 1.77 | 1.77 | 1.77 | 1.77 | 1.87 | 1.87 | 1.87 | 1.88 | 1.88 | 1.98 | 1.99 | 1.99 | 1.99 | 1.99 |
| | 104°F (40.0°C) | TC | 13966 | 13985 | 14000 | 14001 | 14020 | 14808 | 14826 | 14840 | 14843 | 14861 | 15693 | 15713 | 15731 | 15733 | 15751 | 16638 | 16656 | 16674 | 16677 | 16698 |
| | | S/T | 0.55 | 0.64 | 0.73 | 0.73 | 0.83 | 0.58 | 0.68 | 0.78 | 0.78 | 0.89 | 0.62 | 0.72 | 0.82 | 0.82 | 0.94 | 0.65 | 0.77 | 0.87 | 0.87 | 0.99 |
| | | PI | 1.63 | 1.64 | 1.64 | 1.64 | 1.64 | 1.73 | 1.73 | 1.74 | 1.74 | 1.74 | 1.84 | 1.84 | 1.84 | 1.84 | 1.84 | 1.95 | 1.95 | 1.95 | 1.95 | 1.95 |
| | 110°F (43.0°C) | TC | 12830 | 12847 | 12861 | 12861 | 12879 | 13603 | 13619 | 13632 | 13635 | 13651 | 14416 | 14434 | 14450 | 14453 | 14469 | 15284 | 15301 | 15317 | 15320 | 15339 |
| | | S/T | 0.57 | 0.67 | 0.76 | 0.76 | 0.87 | 0.60 | 0.71 | 0.80 | 0.80 | 0.92 | 0.64 | 0.75 | 0.85 | 0.85 | 0.97 | 0.68 | 0.80 | 0.90 | 0.90 | 1.00 |
| | | PI | 1.61 | 1.62 | 1.62 | 1.62 | 1.62 | 1.71 | 1.71 | 1.72 | 1.72 | 1.72 | 1.81 | 1.82 | 1.82 | 1.82 | 1.82 | 1.92 | 1.93 | 1.93 | 1.93 | 1.93 |
| | 115°F (46.0°C) | TC | 12049 | 12065 | 12078 | 12079 | 12095 | 12775 | 12790 | 12803 | 12805 | 12821 | 13538 | 13556 | 13571 | 13573 | 13589 | 14354 | 14370 | 14385 | 14387 | 14405 |
| | | S/T | 0.58 | 0.68 | 0.77 | 0.77 | 0.88 | 0.61 | 0.72 | 0.81 | 0.81 | 0.93 | 0.65 | 0.76 | 0.86 | 0.86 | 0.98 | 0.69 | 0.81 | 0.91 | 0.91 | 1.00 |
| | | PI | 1.51 | 1.51 | 1.51 | 1.51 | 1.51 | 1.60 | 1.60 | 1.60 | 1.60 | 1.60 | 1.69 | 1.70 | 1.70 | 1.70 | 1.70 | 1.80 | 1.80 | 1.80 | 1.80 | 1.80 |
| | 122°F (50.0°C) | TC | 11008 | 11023 | 11035 | 11035 | 11050 | 11671 | 11685 | 11697 | 11699 | 11713 | 12369 | 12385 | 12398 | 12401 | 12415 | 13114 | 13128 | 13142 | 13144 | 13161 |
| | | S/T | 0.59 | 0.69 | 0.79 | 0.79 | 0.90 | 0.62 | 0.73 | 0.83 | 0.83 | 0.95 | 0.66 | 0.78 | 0.88 | 0.88 | 1.00 | 0.70 | 0.82 | 0.94 | 0.94 | 1.00 |
| | | PI | 1.36 | 1.36 | 1.37 | 1.37 | 1.37 | 1.45 | 1.45 | 1.45 | 1.45 | 1.45 | 1.53 | 1.53 | 1.54 | 1.54 | 1.54 | 1.62 | 1.63 | 1.63 | 1.63 | 1.63 |
| 459 | 5°F (-15.0°C) | TC | 14535 | 14554 | 14570 | 14571 | 14590 | 15411 | 15429 | 15444 | 15447 | 15466 | 16331 | 16353 | 16371 | 16374 | 16392 | 17315 | 17334 | 17353 | 17356 | 17377 |
| | | S/T | 0.49 | 0.57 | 0.65 | 0.65 | 0.74 | 0.51 | 0.60 | 0.69 | 0.69 | 0.78 | 0.55 | 0.64 | 0.73 | 0.73 | 0.83 | 0.58 | 0.68 | 0.77 | 0.77 | 0.88 |
| | | PI | 0.52 | 0.52 | 0.52 | 0.52 | 0.52 | 0.55 | 0.55 | 0.55 | 0.55 | 0.55 | 0.58 | 0.58 | 0.59 | 0.59 | 0.59 | 0.62 | 0.62 | 0.62 | 0.62 | 0.62 |
| | 14°F (-10.0°C) | TC | 14960 | 14980 | 14996 | 14996 | 15017 | 15861 | 15880 | 15896 | 15899 | 15918 | 16809 | 16831 | 16849 | 16852 | 16871 | 17821 | 17841 | 17860 | 17863 | 17885 |
| | | S/T | 0.49 | 0.57 | 0.65 | 0.65 | 0.74 | 0.52 | 0.61 | 0.69 | 0.69 | 0.78 | 0.55 | 0.64 | 0.73 | 0.73 | 0.83 | 0.58 | 0.68 | 0.77 | 0.77 | 0.88 |
| | | PI | 0.50 | 0.50 | 0.50 | 0.50 | 0.50 | 0.53 | 0.53 | 0.53 | 0.53 | 0.53 | 0.56 | 0.56 | 0.56 | 0.56 | 0.56 | 0.59 | 0.59 | 0.59 | 0.59 | 0.59 |
| | 17°F (-8.3°C) | TC | 15101 | 15122 | 15138 | 15138 | 15159 | 16011 | 16030 | 16046 | 16049 | 16068 | 16968 | 16990 | 17009 | 17012 | 17031 | 17990 | 18010 | 18029 | 18032 | 18055 |
| | | S/T | 0.49 | 0.57 | 0.65 | 0.65 | 0.74 | 0.52 | 0.61 | 0.69 | 0.69 | 0.79 | 0.55 | 0.64 | 0.73 | 0.73 | 0.83 | 0.58 | 0.68 | 0.78 | 0.78 | 0.88 |
| | | PI | 0.49 | 0.49 | 0.49 | 0.49 | 0.49 | 0.52 | 0.52 | 0.52 | 0.52 | 0.52 | 0.55 | 0.55 | 0.55 | 0.55 | 0.55 | 0.58 | 0.58 | 0.58 | 0.58 | 0.58 |

Manufacturer reserves the right to change, at any time, specifications and designs without notice and without obligations.

# COOLING PERFORMANCE DATA (HEAT PUMP) (CONTINUED)

| AIRFLOW (CFM) | OUTDOOR DB °F (°C) | ID WB °F (°C) | 60.8°F(16.0°C) | | | | | 64.4°F(18.0°C) | | | | | 67°F(19.4°C) | | | | | 71.6°F(22.0°C) | | | | |
|---|---|---|---|---|---|---|---|---|---|---|---|---|---|---|---|---|---|---|---|---|---|---|
| | | ID DB °F (°C) | 73.4°F (23.0°C) | 77.0°F (25.0°C) | 80.0°F (26.7°C) | 80.6°F (27.0°C) | 84.2°F (29.0°C) | 73.4°F (23.0°C) | 77.0°F (25.0°C) | 80.0°F (26.7°C) | 80.6°F (27.0°C) | 84.2°F (29.0°C) | 73.4°F (23.0°C) | 77.0°F (25.0°C) | 80.0°F (26.7°C) | 80.6°F (27.0°C) | 84.2°F (29.0°C) | 73.4°F (23.0°C) | 77.0°F (25.0°C) | 80.0°F (26.7°C) | 80.6°F (27.0°C) | 84.2°F (29.0°C) |
| 459 | 23°F (-5.0°C) | TC | 15029 | 15050 | 15066 | 15067 | 15087 | 15935 | 15954 | 15970 | 15973 | 15992 | 16887 | 16909 | 16928 | 16931 | 16950 | 17905 | 17924 | 17944 | 17947 | 17969 |
| | | S/T | 0.49 | 0.58 | 0.65 | 0.65 | 0.75 | 0.52 | 0.61 | 0.69 | 0.69 | 0.79 | 0.55 | 0.65 | 0.74 | 0.74 | 0.84 | 0.58 | 0.69 | 0.78 | 0.78 | 0.89 |
| | | PI | 0.49 | 0.49 | 0.50 | 0.50 | 0.50 | 0.52 | 0.52 | 0.52 | 0.52 | 0.53 | 0.55 | 0.56 | 0.56 | 0.56 | 0.56 | 0.59 | 0.59 | 0.59 | 0.59 | 0.59 |
| | 35°F (1.7°C) | TC | 14886 | 14906 | 14922 | 14923 | 14943 | 15783 | 15802 | 15818 | 15821 | 15839 | 16726 | 16748 | 16767 | 16770 | 16788 | 17734 | 17753 | 17773 | 17775 | 17797 |
| | | S/T | 0.49 | 0.58 | 0.66 | 0.66 | 0.75 | 0.52 | 0.61 | 0.70 | 0.70 | 0.79 | 0.55 | 0.65 | 0.74 | 0.74 | 0.84 | 0.59 | 0.69 | 0.78 | 0.78 | 0.89 |
| | | PI | 0.50 | 0.50 | 0.50 | 0.50 | 0.51 | 0.53 | 0.53 | 0.53 | 0.54 | 0.54 | 0.57 | 0.57 | 0.57 | 0.57 | 0.57 | 0.60 | 0.60 | 0.60 | 0.60 | 0.60 |
| | 41°F (5.0°C) | TC | 14891 | 14911 | 14927 | 14927 | 14948 | 15788 | 15807 | 15822 | 15825 | 15844 | 16731 | 16753 | 16772 | 16775 | 16794 | 17739 | 17759 | 17778 | 17781 | 17803 |
| | | S/T | 0.49 | 0.58 | 0.66 | 0.66 | 0.75 | 0.52 | 0.61 | 0.70 | 0.70 | 0.80 | 0.56 | 0.65 | 0.74 | 0.74 | 0.84 | 0.59 | 0.69 | 0.78 | 0.78 | 0.89 |
| | | PI | 0.58 | 0.58 | 0.58 | 0.58 | 0.58 | 0.61 | 0.61 | 0.62 | 0.62 | 0.62 | 0.65 | 0.65 | 0.65 | 0.65 | 0.65 | 0.69 | 0.69 | 0.69 | 0.69 | 0.69 |
| | 47°F (8.3°C) | TC | 14895 | 14915 | 14931 | 14932 | 14952 | 15793 | 15812 | 15827 | 15830 | 15849 | 16736 | 16758 | 16777 | 16780 | 16799 | 17745 | 17764 | 17783 | 17786 | 17808 |
| | | S/T | 0.50 | 0.58 | 0.66 | 0.66 | 0.75 | 0.53 | 0.62 | 0.70 | 0.70 | 0.80 | 0.56 | 0.65 | 0.74 | 0.74 | 0.85 | 0.59 | 0.69 | 0.79 | 0.79 | 0.90 |
| | | PI | 0.65 | 0.66 | 0.66 | 0.66 | 0.66 | 0.69 | 0.69 | 0.70 | 0.70 | 0.70 | 0.74 | 0.74 | 0.74 | 0.74 | 0.74 | 0.78 | 0.78 | 0.78 | 0.78 | 0.78 |
| | 50°F (10.0°C) | TC | 14943 | 14963 | 14979 | 14980 | 15000 | 15844 | 15862 | 15878 | 15881 | 15900 | 16790 | 16812 | 16831 | 16834 | 16853 | 17802 | 17821 | 17841 | 17843 | 17866 |
| | | S/T | 0.50 | 0.58 | 0.66 | 0.66 | 0.76 | 0.53 | 0.62 | 0.70 | 0.70 | 0.80 | 0.56 | 0.66 | 0.75 | 0.75 | 0.85 | 0.59 | 0.70 | 0.79 | 0.79 | 0.90 |
| | | PI | 0.67 | 0.67 | 0.67 | 0.67 | 0.67 | 0.71 | 0.71 | 0.71 | 0.71 | 0.71 | 0.75 | 0.75 | 0.75 | 0.75 | 0.75 | 0.79 | 0.80 | 0.80 | 0.80 | 0.80 |
| | 59°F (15.0°C) | TC | 15087 | 15107 | 15123 | 15124 | 15144 | 15996 | 16015 | 16030 | 16034 | 16053 | 16951 | 16973 | 16992 | 16995 | 17014 | 17973 | 17992 | 18012 | 18015 | 18037 |
| | | S/T | 0.50 | 0.59 | 0.67 | 0.67 | 0.76 | 0.53 | 0.62 | 0.71 | 0.71 | 0.81 | 0.56 | 0.66 | 0.75 | 0.75 | 0.86 | 0.60 | 0.70 | 0.80 | 0.80 | 0.91 |
| | | PI | 0.71 | 0.71 | 0.71 | 0.71 | 0.71 | 0.75 | 0.75 | 0.75 | 0.75 | 0.75 | 0.79 | 0.79 | 0.80 | 0.80 | 0.80 | 0.84 | 0.84 | 0.84 | 0.84 | 0.84 |
| | 68°F (20.0°C) | TC | 15230 | 15251 | 15267 | 15268 | 15288 | 16148 | 16167 | 16183 | 16186 | 16205 | 17113 | 17135 | 17154 | 17157 | 17176 | 18144 | 18163 | 18183 | 18186 | 18209 |
| | | S/T | 0.51 | 0.60 | 0.69 | 0.69 | 0.78 | 0.54 | 0.64 | 0.73 | 0.73 | 0.83 | 0.58 | 0.68 | 0.77 | 0.77 | 0.88 | 0.61 | 0.72 | 0.82 | 0.82 | 0.93 |
| | | PI | 0.74 | 0.75 | 0.75 | 0.75 | 0.75 | 0.79 | 0.79 | 0.79 | 0.79 | 0.79 | 0.84 | 0.84 | 0.84 | 0.84 | 0.84 | 0.89 | 0.89 | 0.89 | 0.89 | 0.89 |
| | 77°F (25.0°C) | TC | 15374 | 15394 | 15411 | 15411 | 15432 | 16300 | 16319 | 16335 | 16339 | 16358 | 17274 | 17296 | 17316 | 17319 | 17338 | 18315 | 18335 | 18354 | 18357 | 18380 |
| | | S/T | 0.52 | 0.61 | 0.69 | 0.69 | 0.79 | 0.55 | 0.65 | 0.74 | 0.74 | 0.84 | 0.59 | 0.69 | 0.78 | 0.78 | 0.89 | 0.62 | 0.73 | 0.83 | 0.83 | 0.94 |
| | | PI | 0.78 | 0.78 | 0.79 | 0.79 | 0.79 | 0.83 | 0.83 | 0.83 | 0.83 | 0.83 | 0.88 | 0.88 | 0.88 | 0.88 | 0.88 | 0.93 | 0.93 | 0.94 | 0.94 | 0.94 |
| | 82°F (27.8°C) | TC | 15472 | 15493 | 15509 | 15510 | 15531 | 16404 | 16424 | 16440 | 16443 | 16463 | 17384 | 17407 | 17426 | 17430 | 17449 | 18432 | 18452 | 18472 | 18475 | 18498 |
| | | S/T | 0.53 | 0.62 | 0.70 | 0.70 | 0.80 | 0.56 | 0.66 | 0.75 | 0.75 | 0.85 | 0.59 | 0.70 | 0.79 | 0.79 | 0.90 | 0.63 | 0.74 | 0.84 | 0.84 | 0.95 |
| | | PI | 0.91 | 0.91 | 0.91 | 0.91 | 0.91 | 0.96 | 0.96 | 0.97 | 0.97 | 0.97 | 1.02 | 1.02 | 1.02 | 1.02 | 1.02 | 1.08 | 1.08 | 1.08 | 1.08 | 1.09 |
| | 86°F (30.0°C) | TC | 15574 | 15595 | 15612 | 15613 | 15634 | 16513 | 16532 | 16549 | 16552 | 16571 | 17499 | 17522 | 17541 | 17545 | 17564 | 18554 | 18574 | 18594 | 18597 | 18620 |
| | | S/T | 0.53 | 0.63 | 0.71 | 0.71 | 0.81 | 0.57 | 0.66 | 0.75 | 0.75 | 0.86 | 0.60 | 0.70 | 0.80 | 0.80 | 0.91 | 0.64 | 0.75 | 0.85 | 0.85 | 0.97 |
| | | PI | 1.14 | 1.14 | 1.14 | 1.14 | 1.14 | 1.21 | 1.21 | 1.21 | 1.21 | 1.21 | 1.28 | 1.28 | 1.28 | 1.28 | 1.28 | 1.36 | 1.36 | 1.36 | 1.36 | 1.36 |
| | 95°F (35.0°C) | TC | 15804 | 15825 | 15842 | 15843 | 15864 | 16756 | 16776 | 16793 | 16796 | 16816 | 17758 | 17781 | 17800 | 17804 | 17824 | 18827 | 18848 | 18868 | 18871 | 18895 |
| | | S/T | 0.53 | 0.63 | 0.71 | 0.71 | 0.81 | 0.57 | 0.66 | 0.75 | 0.75 | 0.86 | 0.60 | 0.70 | 0.80 | 0.80 | 0.91 | 0.64 | 0.75 | 0.85 | 0.85 | 0.97 |
| | | PI | 1.66 | 1.66 | 1.66 | 1.66 | 1.66 | 1.76 | 1.76 | 1.76 | 1.76 | 1.76 | 1.86 | 1.87 | 1.87 | 1.87 | 1.87 | 1.98 | 1.98 | 1.98 | 1.98 | 1.98 |
| | 104°F (40.0°C) | TC | 13916 | 13935 | 13950 | 13951 | 13970 | 14755 | 14772 | 14787 | 14790 | 14808 | 15637 | 15657 | 15674 | 15677 | 15695 | 16579 | 16597 | 16615 | 16617 | 16638 |
| | | S/T | 0.55 | 0.64 | 0.73 | 0.73 | 0.83 | 0.58 | 0.68 | 0.77 | 0.77 | 0.88 | 0.62 | 0.72 | 0.82 | 0.82 | 0.93 | 0.65 | 0.76 | 0.87 | 0.87 | 0.99 |
| | | PI | 1.63 | 1.63 | 1.63 | 1.63 | 1.63 | 1.73 | 1.73 | 1.73 | 1.73 | 1.73 | 1.83 | 1.83 | 1.83 | 1.83 | 1.84 | 1.94 | 1.94 | 1.94 | 1.94 | 1.95 |
| | 110°F (43.0°C) | TC | 12784 | 12801 | 12815 | 12815 | 12833 | 13554 | 13570 | 13584 | 13586 | 13602 | 14364 | 14383 | 14399 | 14401 | 14417 | 15229 | 15246 | 15263 | 15265 | 15284 |
| | | S/T | 0.57 | 0.67 | 0.76 | 0.76 | 0.86 | 0.60 | 0.71 | 0.80 | 0.80 | 0.91 | 0.64 | 0.75 | 0.85 | 0.85 | 0.97 | 0.68 | 0.79 | 0.90 | 0.90 | 1.00 |
| | | PI | 1.61 | 1.61 | 1.61 | 1.61 | 1.61 | 1.71 | 1.71 | 1.71 | 1.71 | 1.71 | 1.81 | 1.81 | 1.81 | 1.81 | 1.81 | 1.92 | 1.92 | 1.92 | 1.92 | 1.92 |

Manufacturer reserves the right to change, at any time, specifications and designs without notice and without obligations.

# COOLING PERFORMANCE DATA (HEAT PUMP) (CONTINUED)

| AIRFLOW (CFM) | OUTDOOR DB °F (°C) | ID WB °F (°C) | 60.8°F(16.0°C) | | | | | 64.4°F(18.0°C) | | | | | 67°F(19.4°C) | | | | | 71.6°F(22.0°C) | | | | |
|---|---|---|---|---|---|---|---|---|---|---|---|---|---|---|---|---|---|---|---|---|---|---|
| | | ID DB °F (°C) | 73.4°F (23.0°C) | 77.0°F (25.0°C) | 80.0°F (26.7°C) | 80.6°F (27.0°C) | 84.2°F (29.0°C) | 73.4°F (23.0°C) | 77.0°F (25.0°C) | 80.0°F (26.7°C) | 80.6°F (27.0°C) | 84.2°F (29.0°C) | 73.4°F (23.0°C) | 77.0°F (25.0°C) | 80.0°F (26.7°C) | 80.6°F (27.0°C) | 84.2°F (29.0°C) | 73.4°F (23.0°C) | 77.0°F (25.0°C) | 80.0°F (26.7°C) | 80.6°F (27.0°C) | 84.2°F (29.0°C) |
| 459 | 115°F (46.0°C) | TC | 12006 | 12022 | 12035 | 12035 | 12052 | 12729 | 12744 | 12757 | 12760 | 12775 | 13490 | 13507 | 13522 | 13525 | 13540 | 14303 | 14318 | 14334 | 14336 | 14354 |
| | | S/T | 0.57 | 0.67 | 0.77 | 0.77 | 0.87 | 0.61 | 0.71 | 0.81 | 0.81 | 0.92 | 0.65 | 0.76 | 0.86 | 0.86 | 0.98 | 0.68 | 0.80 | 0.91 | 0.91 | 1.00 |
| | | PI | 1.50 | 1.50 | 1.51 | 1.51 | 1.51 | 1.59 | 1.59 | 1.60 | 1.60 | 1.60 | 1.69 | 1.69 | 1.69 | 1.69 | 1.69 | 1.79 | 1.79 | 1.79 | 1.79 | 1.80 |
| | 122°F (50.0°C) | TC | 10969 | 10983 | 10995 | 10996 | 11010 | 11630 | 11643 | 11655 | 11657 | 11671 | 12324 | 12340 | 12354 | 12356 | 12370 | 13067 | 13081 | 13095 | 13097 | 13114 |
| | | S/T | 0.59 | 0.69 | 0.78 | 0.78 | 0.89 | 0.62 | 0.73 | 0.83 | 0.83 | 0.95 | 0.66 | 0.77 | 0.88 | 0.88 | 1.00 | 0.70 | 0.82 | 0.93 | 0.93 | 1.00 |
| | | PI | 1.36 | 1.36 | 1.36 | 1.36 | 1.36 | 1.44 | 1.44 | 1.44 | 1.44 | 1.45 | 1.53 | 1.53 | 1.53 | 1.53 | 1.53 | 1.62 | 1.62 | 1.62 | 1.62 | 1.62 |
| 24k | | | | | | | | | | | | | | | | | | | | | | |
| 341 | 5°F (-15.0°C) | TC | 18574 | 18599 | 18619 | 18620 | 18645 | 19694 | 19717 | 19737 | 19741 | 19764 | 20870 | 20898 | 20921 | 20925 | 20948 | 22128 | 22152 | 22176 | 22180 | 22207 |
| | | S/T | 0.36 | 0.42 | 0.48 | 0.48 | 0.55 | 0.38 | 0.45 | 0.51 | 0.51 | 0.58 | 0.41 | 0.48 | 0.54 | 0.54 | 0.62 | 0.43 | 0.51 | 0.57 | 0.57 | 0.65 |
| | | PI | 1.26 | 1.26 | 1.26 | 1.26 | 1.26 | 1.33 | 1.33 | 1.33 | 1.34 | 1.34 | 1.41 | 1.41 | 1.41 | 1.42 | 1.42 | 1.50 | 1.50 | 1.50 | 1.50 | 1.50 |
| | 14°F (-10.0°C) | TC | 18663 | 18688 | 18708 | 18709 | 18734 | 19788 | 19811 | 19831 | 19835 | 19858 | 20970 | 20997 | 21021 | 21025 | 21048 | 22234 | 22258 | 22282 | 22285 | 22313 |
| | | S/T | 0.36 | 0.43 | 0.48 | 0.48 | 0.55 | 0.38 | 0.45 | 0.51 | 0.51 | 0.58 | 0.41 | 0.48 | 0.54 | 0.54 | 0.62 | 0.43 | 0.51 | 0.58 | 0.58 | 0.66 |
| | | PI | 1.12 | 1.12 | 1.12 | 1.12 | 1.12 | 1.19 | 1.19 | 1.19 | 1.19 | 1.19 | 1.26 | 1.26 | 1.26 | 1.26 | 1.26 | 1.33 | 1.33 | 1.34 | 1.34 | 1.34 |
| | 17°F (-8.3°C) | TC | 18693 | 18718 | 18738 | 18739 | 18764 | 19819 | 19843 | 19862 | 19866 | 19890 | 21003 | 21030 | 21054 | 21058 | 21081 | 22269 | 22293 | 22317 | 22321 | 22348 |
| | | S/T | 0.36 | 0.43 | 0.48 | 0.48 | 0.55 | 0.39 | 0.45 | 0.51 | 0.51 | 0.59 | 0.41 | 0.48 | 0.54 | 0.54 | 0.62 | 0.43 | 0.51 | 0.58 | 0.58 | 0.66 |
| | | PI | 1.07 | 1.07 | 1.08 | 1.08 | 1.08 | 1.14 | 1.14 | 1.14 | 1.14 | 1.14 | 1.21 | 1.21 | 1.21 | 1.21 | 1.21 | 1.28 | 1.28 | 1.28 | 1.28 | 1.28 |
| | 23°F (-5.0°C) | TC | 18038 | 18063 | 18082 | 18083 | 18107 | 19125 | 19148 | 19167 | 19171 | 19193 | 20268 | 20294 | 20317 | 20321 | 20343 | 21489 | 21513 | 21536 | 21539 | 21566 |
| | | S/T | 0.37 | 0.43 | 0.49 | 0.49 | 0.56 | 0.39 | 0.45 | 0.52 | 0.52 | 0.59 | 0.41 | 0.48 | 0.55 | 0.55 | 0.62 | 0.44 | 0.51 | 0.58 | 0.58 | 0.66 |
| | | PI | 1.08 | 1.08 | 1.08 | 1.08 | 1.08 | 1.14 | 1.14 | 1.14 | 1.14 | 1.15 | 1.21 | 1.21 | 1.21 | 1.21 | 1.21 | 1.28 | 1.28 | 1.29 | 1.29 | 1.29 |
| | 35°F (1.7°C) | TC | 16730 | 16752 | 16770 | 16771 | 16794 | 17738 | 17759 | 17776 | 17780 | 17801 | 18798 | 18822 | 18843 | 18846 | 18868 | 19930 | 19952 | 19974 | 19977 | 20002 |
| | | S/T | 0.37 | 0.43 | 0.49 | 0.49 | 0.56 | 0.39 | 0.46 | 0.52 | 0.52 | 0.59 | 0.41 | 0.48 | 0.55 | 0.55 | 0.63 | 0.44 | 0.51 | 0.58 | 0.58 | 0.66 |
| | | PI | 1.09 | 1.09 | 1.09 | 1.09 | 1.09 | 1.15 | 1.15 | 1.15 | 1.15 | 1.15 | 1.22 | 1.22 | 1.22 | 1.22 | 1.22 | 1.29 | 1.29 | 1.30 | 1.30 | 1.30 |
| | 41°F (5.0°C) | TC | 16042 | 16063 | 16081 | 16081 | 16103 | 17008 | 17029 | 17045 | 17049 | 17069 | 18025 | 18048 | 18068 | 18071 | 18092 | 19111 | 19131 | 19152 | 19155 | 19179 |
| | | S/T | 0.37 | 0.43 | 0.49 | 0.49 | 0.56 | 0.39 | 0.46 | 0.52 | 0.52 | 0.59 | 0.41 | 0.49 | 0.55 | 0.55 | 0.63 | 0.44 | 0.51 | 0.58 | 0.58 | 0.67 |
| | | PI | 0.99 | 1.00 | 1.00 | 1.00 | 1.00 | 1.05 | 1.06 | 1.06 | 1.06 | 1.06 | 1.12 | 1.12 | 1.12 | 1.12 | 1.12 | 1.18 | 1.19 | 1.19 | 1.19 | 1.19 |
| | 47°F (8.3°C) | TC | 15354 | 15374 | 15391 | 15392 | 15412 | 16279 | 16298 | 16314 | 16318 | 16337 | 17251 | 17274 | 17293 | 17296 | 17316 | 18291 | 18311 | 18331 | 18334 | 18356 |
| | | S/T | 0.37 | 0.43 | 0.49 | 0.49 | 0.56 | 0.39 | 0.46 | 0.52 | 0.52 | 0.59 | 0.41 | 0.49 | 0.55 | 0.55 | 0.63 | 0.44 | 0.52 | 0.59 | 0.59 | 0.67 |
| | | PI | 0.90 | 0.91 | 0.91 | 0.91 | 0.91 | 0.96 | 0.96 | 0.96 | 0.96 | 0.96 | 1.02 | 1.02 | 1.02 | 1.02 | 1.02 | 1.08 | 1.08 | 1.08 | 1.08 | 1.08 |
| | 50°F (10.0°C) | TC | 15538 | 15559 | 15576 | 15576 | 15597 | 16474 | 16494 | 16510 | 16514 | 16533 | 17459 | 17481 | 17501 | 17504 | 17524 | 18511 | 18531 | 18551 | 18554 | 18577 |
| | | S/T | 0.37 | 0.44 | 0.49 | 0.49 | 0.56 | 0.39 | 0.46 | 0.52 | 0.52 | 0.60 | 0.42 | 0.49 | 0.56 | 0.56 | 0.63 | 0.44 | 0.52 | 0.59 | 0.59 | 0.67 |
| | | PI | 0.93 | 0.93 | 0.93 | 0.93 | 0.93 | 0.98 | 0.98 | 0.99 | 0.99 | 0.99 | 1.04 | 1.04 | 1.04 | 1.04 | 1.05 | 1.11 | 1.11 | 1.11 | 1.11 | 1.11 |
| | 59°F (15.0°C) | TC | 16091 | 16113 | 16130 | 16131 | 16153 | 17061 | 17081 | 17098 | 17102 | 17122 | 18080 | 18104 | 18124 | 18128 | 18148 | 19170 | 19191 | 19212 | 19215 | 19239 |
| | | S/T | 0.37 | 0.44 | 0.50 | 0.50 | 0.57 | 0.40 | 0.46 | 0.53 | 0.53 | 0.60 | 0.42 | 0.49 | 0.56 | 0.56 | 0.64 | 0.44 | 0.52 | 0.59 | 0.59 | 0.67 |
| | | PI | 1.00 | 1.00 | 1.00 | 1.00 | 1.00 | 1.06 | 1.06 | 1.06 | 1.06 | 1.06 | 1.12 | 1.12 | 1.12 | 1.13 | 1.13 | 1.19 | 1.19 | 1.19 | 1.19 | 1.19 |
| | 68°F (20.0°C) | TC | 16645 | 16667 | 16685 | 16686 | 16708 | 17648 | 17669 | 17686 | 17690 | 17711 | 18702 | 18727 | 18747 | 18751 | 18772 | 19829 | 19851 | 19872 | 19875 | 19900 |
| | | S/T | 0.38 | 0.45 | 0.51 | 0.51 | 0.58 | 0.41 | 0.48 | 0.54 | 0.54 | 0.62 | 0.43 | 0.50 | 0.57 | 0.57 | 0.65 | 0.46 | 0.53 | 0.61 | 0.61 | 0.69 |
| | | PI | 1.07 | 1.07 | 1.07 | 1.07 | 1.07 | 1.13 | 1.14 | 1.14 | 1.14 | 1.14 | 1.20 | 1.20 | 1.21 | 1.21 | 1.21 | 1.27 | 1.28 | 1.28 | 1.28 | 1.28 |
| | 77°F (25.0°C) | TC | 17198 | 17221 | 17240 | 17241 | 17264 | 18235 | 18256 | 18274 | 18278 | 18300 | 19324 | 19349 | 19371 | 19374 | 19396 | 20488 | 20511 | 20533 | 20536 | 20562 |
| | | S/T | 0.39 | 0.45 | 0.52 | 0.52 | 0.59 | 0.41 | 0.48 | 0.55 | 0.55 | 0.62 | 0.44 | 0.51 | 0.58 | 0.58 | 0.66 | 0.46 | 0.54 | 0.62 | 0.62 | 0.70 |
| | | PI | 1.14 | 1.14 | 1.14 | 1.14 | 1.15 | 1.21 | 1.21 | 1.21 | 1.21 | 1.21 | 1.28 | 1.28 | 1.29 | 1.29 | 1.29 | 1.36 | 1.36 | 1.36 | 1.36 | 1.36 |

Manufacturer reserves the right to change, at any time, specifications and designs without notice and without obligations.

# COOLING PERFORMANCE DATA (HEAT PUMP) (CONTINUED)

| AIRFLOW (CFM) | OUTDOOR DB °F (°C) | ID WB °F (°C) | 60.8°F(16.0°C) | | | | | 64.4°F(18.0°C) | | | | | 67°F(19.4°C) | | | | | 71.6°F(22.0°C) | | | | |
|---|---|---|---|---|---|---|---|---|---|---|---|---|---|---|---|---|---|---|---|---|---|---|
| | | ID DB °F (°C) | 73.4°F (23.0°C) | 77.0°F (25.0°C) | 80.0°F (26.7°C) | 80.6°F (27.0°C) | 84.2°F (29.0°C) | 73.4°F (23.0°C) | 77.0°F (25.0°C) | 80.0°F (26.7°C) | 80.6°F (27.0°C) | 84.2°F (29.0°C) | 73.4°F (23.0°C) | 77.0°F (25.0°C) | 80.0°F (26.7°C) | 80.6°F (27.0°C) | 84.2°F (29.0°C) | 73.4°F (23.0°C) | 77.0°F (25.0°C) | 80.0°F (26.7°C) | 80.6°F (27.0°C) | 84.2°F (29.0°C) |
| 341 | 82°F (27.8°C) | TC | 17203 | 17226 | 17244 | 17245 | 17269 | 18240 | 18261 | 18279 | 18283 | 18304 | 19329 | 19354 | 19376 | 19380 | 19401 | 20494 | 20516 | 20538 | 20542 | 20567 |
| | | S/T | 0.39 | 0.46 | 0.52 | 0.52 | 0.60 | 0.42 | 0.49 | 0.55 | 0.56 | 0.63 | 0.44 | 0.52 | 0.59 | 0.59 | 0.67 | 0.47 | 0.55 | 0.62 | 0.62 | 0.71 |
| | | PI | 1.26 | 1.26 | 1.26 | 1.26 | 1.26 | 1.33 | 1.33 | 1.34 | 1.34 | 1.34 | 1.41 | 1.41 | 1.42 | 1.42 | 1.42 | 1.50 | 1.50 | 1.50 | 1.50 | 1.50 |
| | 86°F (30.0°C) | TC | 16825 | 16847 | 16865 | 16866 | 16889 | 17838 | 17860 | 17877 | 17881 | 17902 | 18904 | 18929 | 18950 | 18953 | 18975 | 20043 | 20065 | 20087 | 20090 | 20115 |
| | | S/T | 0.40 | 0.47 | 0.53 | 0.53 | 0.60 | 0.42 | 0.49 | 0.56 | 0.56 | 0.64 | 0.45 | 0.52 | 0.60 | 0.60 | 0.68 | 0.47 | 0.56 | 0.63 | 0.63 | 0.72 |
| | | PI | 1.45 | 1.45 | 1.45 | 1.45 | 1.45 | 1.53 | 1.54 | 1.54 | 1.54 | 1.54 | 1.63 | 1.63 | 1.63 | 1.63 | 1.63 | 1.72 | 1.73 | 1.73 | 1.73 | 1.73 |
| | 95°F (35.0°C) | TC | 15973 | 15995 | 16012 | 16013 | 16034 | 16936 | 16956 | 16973 | 16976 | 16996 | 17948 | 17971 | 17991 | 17995 | 18015 | 19029 | 19050 | 19071 | 19074 | 19097 |
| | | S/T | 0.40 | 0.47 | 0.53 | 0.53 | 0.60 | 0.42 | 0.49 | 0.56 | 0.56 | 0.64 | 0.45 | 0.52 | 0.60 | 0.60 | 0.68 | 0.47 | 0.56 | 0.63 | 0.63 | 0.72 |
| | | PI | 1.87 | 1.88 | 1.88 | 1.88 | 1.88 | 1.99 | 1.99 | 1.99 | 1.99 | 1.99 | 2.10 | 2.11 | 2.11 | 2.11 | 2.11 | 2.23 | 2.23 | 2.24 | 2.24 | 2.24 |
| | 104°F (40.0°C) | TC | 13642 | 13660 | 13675 | 13676 | 13694 | 14464 | 14481 | 14496 | 14499 | 14516 | 15328 | 15348 | 15365 | 15368 | 15385 | 16252 | 16270 | 16287 | 16290 | 16310 |
| | | S/T | 0.41 | 0.48 | 0.54 | 0.54 | 0.62 | 0.43 | 0.51 | 0.58 | 0.58 | 0.66 | 0.46 | 0.54 | 0.61 | 0.61 | 0.70 | 0.49 | 0.57 | 0.65 | 0.65 | 0.74 |
| | | PI | 1.72 | 1.72 | 1.72 | 1.72 | 1.72 | 1.82 | 1.82 | 1.82 | 1.82 | 1.83 | 1.93 | 1.93 | 1.93 | 1.93 | 1.93 | 2.04 | 2.05 | 2.05 | 2.05 | 2.05 |
| | 110°F (43.0°C) | TC | 12243 | 12260 | 12273 | 12274 | 12290 | 12981 | 12997 | 13009 | 13012 | 13027 | 13757 | 13775 | 13790 | 13793 | 13808 | 14586 | 14602 | 14617 | 14620 | 14638 |
| | | S/T | 0.42 | 0.50 | 0.56 | 0.56 | 0.64 | 0.45 | 0.53 | 0.60 | 0.60 | 0.68 | 0.47 | 0.56 | 0.63 | 0.63 | 0.72 | 0.50 | 0.59 | 0.67 | 0.67 | 0.76 |
| | | PI | 1.62 | 1.62 | 1.63 | 1.63 | 1.63 | 1.72 | 1.72 | 1.72 | 1.72 | 1.72 | 1.82 | 1.82 | 1.83 | 1.83 | 1.83 | 1.93 | 1.93 | 1.94 | 1.94 | 1.94 |
| | 115°F (46.0°C) | TC | 10714 | 10728 | 10739 | 10740 | 10754 | 11359 | 11373 | 11384 | 11386 | 11400 | 12038 | 12053 | 12067 | 12069 | 12083 | 12763 | 12777 | 12791 | 12793 | 12809 |
| | | S/T | 0.43 | 0.50 | 0.57 | 0.57 | 0.65 | 0.45 | 0.53 | 0.60 | 0.60 | 0.69 | 0.48 | 0.56 | 0.64 | 0.64 | 0.73 | 0.51 | 0.60 | 0.68 | 0.68 | 0.77 |
| | | PI | 1.46 | 1.46 | 1.46 | 1.46 | 1.47 | 1.55 | 1.55 | 1.55 | 1.55 | 1.55 | 1.64 | 1.64 | 1.64 | 1.64 | 1.65 | 1.74 | 1.74 | 1.74 | 1.74 | 1.75 |
| | 122°F (50.0°C) | TC | 8674 | 8685 | 8695 | 8695 | 8707 | 9196 | 9207 | 9216 | 9218 | 9229 | 9746 | 9759 | 9769 | 9771 | 9782 | 10333 | 10344 | 10356 | 10357 | 10370 |
| | | S/T | 0.44 | 0.51 | 0.58 | 0.58 | 0.66 | 0.46 | 0.54 | 0.62 | 0.62 | 0.70 | 0.49 | 0.58 | 0.66 | 0.66 | 0.75 | 0.52 | 0.61 | 0.69 | 0.69 | 0.79 |
| | | PI | 1.25 | 1.25 | 1.25 | 1.25 | 1.25 | 1.32 | 1.32 | 1.32 | 1.32 | 1.32 | 1.40 | 1.40 | 1.40 | 1.40 | 1.40 | 1.48 | 1.49 | 1.49 | 1.49 | 1.49 |
| 447 | 5°F (-15.0°C) | TC | 20493 | 20520 | 20542 | 20543 | 20571 | 21728 | 21753 | 21775 | 21779 | 21805 | 23026 | 23056 | 23081 | 23086 | 23111 | 24413 | 24440 | 24466 | 24470 | 24500 |
| | | S/T | 0.40 | 0.47 | 0.53 | 0.53 | 0.61 | 0.42 | 0.50 | 0.56 | 0.56 | 0.64 | 0.45 | 0.53 | 0.60 | 0.60 | 0.68 | 0.48 | 0.56 | 0.63 | 0.63 | 0.72 |
| | | PI | 1.39 | 1.39 | 1.39 | 1.39 | 1.39 | 1.47 | 1.47 | 1.47 | 1.47 | 1.47 | 1.56 | 1.56 | 1.56 | 1.56 | 1.56 | 1.65 | 1.65 | 1.65 | 1.65 | 1.66 |
| | 14°F (-10.0°C) | TC | 20590 | 20618 | 20640 | 20641 | 20669 | 21831 | 21857 | 21879 | 21883 | 21909 | 23136 | 23166 | 23191 | 23196 | 23222 | 24529 | 24556 | 24583 | 24587 | 24617 |
| | | S/T | 0.40 | 0.47 | 0.53 | 0.53 | 0.61 | 0.42 | 0.50 | 0.57 | 0.57 | 0.64 | 0.45 | 0.53 | 0.60 | 0.60 | 0.68 | 0.48 | 0.56 | 0.64 | 0.64 | 0.72 |
| | | PI | 1.23 | 1.24 | 1.24 | 1.24 | 1.24 | 1.31 | 1.31 | 1.31 | 1.31 | 1.31 | 1.39 | 1.39 | 1.39 | 1.39 | 1.39 | 1.47 | 1.47 | 1.47 | 1.47 | 1.48 |
| | 17°F (-8.3°C) | TC | 20623 | 20651 | 20673 | 20674 | 20702 | 21866 | 21892 | 21913 | 21918 | 21944 | 23172 | 23202 | 23228 | 23232 | 23258 | 24568 | 24595 | 24622 | 24626 | 24656 |
| | | S/T | 0.40 | 0.47 | 0.53 | 0.53 | 0.61 | 0.43 | 0.50 | 0.57 | 0.57 | 0.65 | 0.45 | 0.53 | 0.60 | 0.60 | 0.69 | 0.48 | 0.56 | 0.64 | 0.64 | 0.73 |
| | | PI | 1.18 | 1.19 | 1.19 | 1.19 | 1.19 | 1.25 | 1.26 | 1.26 | 1.26 | 1.26 | 1.33 | 1.33 | 1.33 | 1.33 | 1.33 | 1.41 | 1.41 | 1.41 | 1.41 | 1.42 |
| | 23°F (-5.0°C) | TC | 19901 | 19928 | 19949 | 19950 | 19977 | 21100 | 21125 | 21146 | 21150 | 21176 | 22361 | 22390 | 22415 | 22419 | 22444 | 23708 | 23734 | 23760 | 23764 | 23793 |
| | | S/T | 0.40 | 0.47 | 0.54 | 0.54 | 0.61 | 0.43 | 0.50 | 0.57 | 0.57 | 0.65 | 0.45 | 0.53 | 0.60 | 0.60 | 0.69 | 0.48 | 0.56 | 0.64 | 0.64 | 0.73 |
| | | PI | 1.19 | 1.19 | 1.19 | 1.19 | 1.19 | 1.26 | 1.26 | 1.26 | 1.26 | 1.26 | 1.34 | 1.34 | 1.34 | 1.34 | 1.34 | 1.42 | 1.42 | 1.42 | 1.42 | 1.42 |
| | 35°F (1.7°C) | TC | 18457 | 18482 | 18502 | 18503 | 18528 | 19570 | 19593 | 19612 | 19616 | 19639 | 20739 | 20766 | 20789 | 20793 | 20816 | 21988 | 22012 | 22036 | 22040 | 22067 |
| | | S/T | 0.41 | 0.48 | 0.54 | 0.54 | 0.62 | 0.43 | 0.50 | 0.57 | 0.57 | 0.65 | 0.46 | 0.53 | 0.61 | 0.61 | 0.69 | 0.48 | 0.57 | 0.64 | 0.64 | 0.73 |
| | | PI | 1.20 | 1.20 | 1.20 | 1.20 | 1.20 | 1.27 | 1.27 | 1.27 | 1.27 | 1.27 | 1.35 | 1.35 | 1.35 | 1.35 | 1.35 | 1.43 | 1.43 | 1.43 | 1.43 | 1.43 |
| | 41°F (5.0°C) | TC | 17698 | 17722 | 17741 | 17742 | 17766 | 18765 | 18787 | 18806 | 18809 | 18832 | 19886 | 19912 | 19934 | 19938 | 19960 | 21084 | 21107 | 21130 | 21133 | 21160 |
| | | S/T | 0.41 | 0.48 | 0.54 | 0.54 | 0.62 | 0.43 | 0.50 | 0.57 | 0.57 | 0.65 | 0.46 | 0.54 | 0.61 | 0.61 | 0.69 | 0.48 | 0.57 | 0.64 | 0.64 | 0.73 |
| | | PI | 1.10 | 1.10 | 1.10 | 1.10 | 1.10 | 1.16 | 1.16 | 1.17 | 1.17 | 1.17 | 1.23 | 1.23 | 1.24 | 1.24 | 1.24 | 1.31 | 1.31 | 1.31 | 1.31 | 1.31 |

Manufacturer reserves the right to change, at any time, specifications and designs without notice and without obligations.

# COOLING PERFORMANCE DATA (HEAT PUMP) (CONTINUED)

| AIRFLOW (CFM) | OUTDOOR DB °F (°C) | ID WB °F (°C) | 60.8°F(16.0°C) | | | | | 64.4°F(18.0°C) | | | | | 67°F(19.4°C) | | | | | 71.6°F(22.0°C) | | | | |
|---|---|---|---|---|---|---|---|---|---|---|---|---|---|---|---|---|---|---|---|---|---|---|
| | | ID DB °F (°C) | 73.4°F (23.0°C) | 77.0°F (25.0°C) | 80.0°F (26.7°C) | 80.6°F (27.0°C) | 84.2°F (29.0°C) | 73.4°F (23.0°C) | 77.0°F (25.0°C) | 80.0°F (26.7°C) | 80.6°F (27.0°C) | 84.2°F (29.0°C) | 73.4°F (23.0°C) | 77.0°F (25.0°C) | 80.0°F (26.7°C) | 80.6°F (27.0°C) | 84.2°F (29.0°C) | 73.4°F (23.0°C) | 77.0°F (25.0°C) | 80.0°F (26.7°C) | 80.6°F (27.0°C) | 84.2°F (29.0°C) |
| 447 | 47°F (8.3°C) | TC | 16939 | 16962 | 16980 | 16981 | 17004 | 17960 | 17981 | 17999 | 18003 | 18024 | 19033 | 19058 | 19079 | 19082 | 19104 | 20180 | 20202 | 20224 | 20227 | 20252 |
| | | S/T | 0.41 | 0.48 | 0.54 | 0.54 | 0.62 | 0.43 | 0.51 | 0.58 | 0.58 | 0.66 | 0.46 | 0.54 | 0.61 | 0.61 | 0.70 | 0.48 | 0.57 | 0.65 | 0.65 | 0.74 |
| | | PI | 1.00 | 1.00 | 1.00 | 1.00 | 1.00 | 1.06 | 1.06 | 1.06 | 1.06 | 1.06 | 1.12 | 1.12 | 1.12 | 1.12 | 1.12 | 1.19 | 1.19 | 1.19 | 1.19 | 1.19 |
| | 50°F (10.0°C) | TC | 17143 | 17166 | 17184 | 17185 | 17208 | 18176 | 18197 | 18215 | 18219 | 18240 | 19262 | 19287 | 19308 | 19312 | 19333 | 20422 | 20444 | 20467 | 20470 | 20495 |
| | | S/T | 0.41 | 0.48 | 0.55 | 0.55 | 0.62 | 0.43 | 0.51 | 0.58 | 0.58 | 0.66 | 0.46 | 0.54 | 0.61 | 0.61 | 0.70 | 0.49 | 0.57 | 0.65 | 0.65 | 0.74 |
| | | PI | 1.02 | 1.02 | 1.03 | 1.03 | 1.03 | 1.09 | 1.09 | 1.09 | 1.09 | 1.09 | 1.15 | 1.15 | 1.15 | 1.15 | 1.15 | 1.22 | 1.22 | 1.22 | 1.22 | 1.22 |
| | 59°F (15.0°C) | TC | 17753 | 17777 | 17796 | 17797 | 17821 | 18823 | 18845 | 18864 | 18868 | 18890 | 19948 | 19973 | 19996 | 19999 | 20022 | 21149 | 21172 | 21196 | 21199 | 21225 |
| | | S/T | 0.41 | 0.48 | 0.55 | 0.55 | 0.63 | 0.44 | 0.51 | 0.58 | 0.58 | 0.66 | 0.46 | 0.54 | 0.62 | 0.62 | 0.70 | 0.49 | 0.57 | 0.65 | 0.65 | 0.74 |
| | | PI | 1.10 | 1.10 | 1.10 | 1.10 | 1.11 | 1.17 | 1.17 | 1.17 | 1.17 | 1.17 | 1.24 | 1.24 | 1.24 | 1.24 | 1.24 | 1.31 | 1.31 | 1.32 | 1.32 | 1.32 |
| | 68°F (20.0°C) | TC | 18364 | 18388 | 18408 | 18409 | 18434 | 19470 | 19493 | 19513 | 19516 | 19540 | 20634 | 20660 | 20683 | 20687 | 20710 | 21877 | 21901 | 21924 | 21928 | 21955 |
| | | S/T | 0.42 | 0.50 | 0.56 | 0.56 | 0.64 | 0.45 | 0.53 | 0.60 | 0.60 | 0.68 | 0.47 | 0.56 | 0.63 | 0.63 | 0.72 | 0.50 | 0.59 | 0.67 | 0.67 | 0.76 |
| | | PI | 1.18 | 1.18 | 1.18 | 1.18 | 1.18 | 1.25 | 1.25 | 1.25 | 1.25 | 1.26 | 1.33 | 1.33 | 1.33 | 1.33 | 1.33 | 1.41 | 1.41 | 1.41 | 1.41 | 1.41 |
| | 77°F (25.0°C) | TC | 18974 | 19000 | 19020 | 19021 | 19047 | 20118 | 20141 | 20161 | 20165 | 20189 | 21319 | 21347 | 21371 | 21375 | 21399 | 22604 | 22629 | 22653 | 22657 | 22685 |
| | | S/T | 0.43 | 0.50 | 0.57 | 0.57 | 0.65 | 0.45 | 0.53 | 0.60 | 0.60 | 0.69 | 0.48 | 0.56 | 0.64 | 0.64 | 0.73 | 0.51 | 0.60 | 0.68 | 0.68 | 0.77 |
| | | PI | 1.26 | 1.26 | 1.26 | 1.26 | 1.26 | 1.33 | 1.34 | 1.34 | 1.34 | 1.34 | 1.41 | 1.42 | 1.42 | 1.42 | 1.42 | 1.50 | 1.50 | 1.50 | 1.50 | 1.51 |
| | 82°F (27.8°C) | TC | 18979 | 19005 | 19025 | 19026 | 19052 | 20123 | 20147 | 20167 | 20171 | 20195 | 21325 | 21353 | 21377 | 21381 | 21405 | 22610 | 22635 | 22659 | 22663 | 22691 |
| | | S/T | 0.43 | 0.51 | 0.58 | 0.58 | 0.66 | 0.46 | 0.54 | 0.61 | 0.61 | 0.70 | 0.49 | 0.57 | 0.65 | 0.65 | 0.74 | 0.52 | 0.61 | 0.69 | 0.69 | 0.78 |
| | | PI | 1.39 | 1.39 | 1.39 | 1.39 | 1.39 | 1.47 | 1.47 | 1.47 | 1.47 | 1.48 | 1.56 | 1.56 | 1.56 | 1.56 | 1.56 | 1.65 | 1.65 | 1.66 | 1.66 | 1.66 |
| | 86°F (30.0°C) | TC | 18562 | 18587 | 18607 | 18608 | 18633 | 19681 | 19704 | 19723 | 19727 | 19751 | 20856 | 20883 | 20907 | 20911 | 20934 | 22113 | 22137 | 22161 | 22165 | 22192 |
| | | S/T | 0.44 | 0.51 | 0.58 | 0.59 | 0.67 | 0.47 | 0.55 | 0.62 | 0.62 | 0.71 | 0.49 | 0.58 | 0.66 | 0.66 | 0.75 | 0.52 | 0.61 | 0.70 | 0.70 | 0.79 |
| | | PI | 1.60 | 1.60 | 1.60 | 1.60 | 1.60 | 1.69 | 1.69 | 1.70 | 1.70 | 1.70 | 1.79 | 1.80 | 1.80 | 1.80 | 1.80 | 1.90 | 1.90 | 1.91 | 1.91 | 1.91 |
| | 95°F (35.0°C) | TC | 17623 | 17647 | 17666 | 17666 | 17690 | 18685 | 18707 | 18726 | 18729 | 18751 | 19801 | 19827 | 19849 | 19853 | 19875 | 20994 | 21017 | 21040 | 21043 | 21069 |
| | | S/T | 0.44 | 0.51 | 0.58 | 0.59 | 0.67 | 0.47 | 0.55 | 0.62 | 0.62 | 0.71 | 0.49 | 0.58 | 0.66 | 0.66 | 0.75 | 0.52 | 0.61 | 0.70 | 0.70 | 0.79 |
| | | PI | 2.07 | 2.07 | 2.07 | 2.07 | 2.07 | 2.19 | 2.19 | 2.20 | 2.20 | 2.20 | 2.32 | 2.32 | 2.33 | 2.33 | 2.33 | 2.46 | 2.46 | 2.47 | 2.47 | 2.47 |
| | 104°F (40.0°C) | TC | 15051 | 15071 | 15087 | 15088 | 15108 | 15958 | 15977 | 15993 | 15996 | 16015 | 16911 | 16933 | 16952 | 16955 | 16974 | 17930 | 17950 | 17969 | 17972 | 17994 |
| | | S/T | 0.45 | 0.53 | 0.60 | 0.60 | 0.68 | 0.48 | 0.56 | 0.64 | 0.64 | 0.72 | 0.51 | 0.59 | 0.67 | 0.67 | 0.77 | 0.54 | 0.63 | 0.71 | 0.71 | 0.81 |
| | | PI | 1.89 | 1.90 | 1.90 | 1.90 | 1.90 | 2.01 | 2.01 | 2.01 | 2.01 | 2.01 | 2.13 | 2.13 | 2.13 | 2.13 | 2.13 | 2.25 | 2.26 | 2.26 | 2.26 | 2.26 |
| | 110°F (43.0°C) | TC | 13508 | 13526 | 13540 | 13541 | 13559 | 14322 | 14339 | 14353 | 14356 | 14373 | 15177 | 15197 | 15214 | 15217 | 15234 | 16092 | 16109 | 16127 | 16129 | 16149 |
| | | S/T | 0.47 | 0.55 | 0.62 | 0.62 | 0.71 | 0.49 | 0.58 | 0.66 | 0.66 | 0.75 | 0.52 | 0.61 | 0.70 | 0.70 | 0.80 | 0.56 | 0.65 | 0.74 | 0.74 | 0.84 |
| | | PI | 1.79 | 1.79 | 1.79 | 1.79 | 1.80 | 1.90 | 1.90 | 1.90 | 1.90 | 1.90 | 2.01 | 2.01 | 2.01 | 2.01 | 2.02 | 2.13 | 2.13 | 2.14 | 2.14 | 2.14 |
| | 115°F (46.0°C) | TC | 11820 | 11836 | 11848 | 11849 | 11865 | 12532 | 12547 | 12559 | 12562 | 12577 | 13281 | 13298 | 13313 | 13315 | 13330 | 14081 | 14096 | 14112 | 14114 | 14132 |
| | | S/T | 0.47 | 0.55 | 0.63 | 0.63 | 0.72 | 0.50 | 0.59 | 0.67 | 0.67 | 0.76 | 0.53 | 0.62 | 0.71 | 0.71 | 0.81 | 0.56 | 0.66 | 0.75 | 0.75 | 0.85 |
| | | PI | 1.61 | 1.61 | 1.61 | 1.61 | 1.62 | 1.71 | 1.71 | 1.71 | 1.71 | 1.71 | 1.81 | 1.81 | 1.81 | 1.81 | 1.82 | 1.92 | 1.92 | 1.92 | 1.92 | 1.93 |
| | 122°F (50.0°C) | TC | 9569 | 9582 | 9593 | 9593 | 9606 | 10146 | 10158 | 10168 | 10170 | 10182 | 10752 | 10766 | 10778 | 10780 | 10792 | 11400 | 11412 | 11425 | 11427 | 11441 |
| | | S/T | 0.48 | 0.57 | 0.64 | 0.64 | 0.73 | 0.51 | 0.60 | 0.68 | 0.68 | 0.78 | 0.54 | 0.64 | 0.72 | 0.72 | 0.82 | 0.57 | 0.67 | 0.77 | 0.77 | 0.87 |
| | | PI | 1.37 | 1.38 | 1.38 | 1.38 | 1.38 | 1.46 | 1.46 | 1.46 | 1.46 | 1.46 | 1.54 | 1.55 | 1.55 | 1.55 | 1.55 | 1.64 | 1.64 | 1.64 | 1.64 | 1.64 |

Manufacturer reserves the right to change, at any time, specifications and designs without notice and without obligations.

# COOLING PERFORMANCE DATA (HEAT PUMP) (CONTINUED)

| AIRFLOW (CFM) | OUTDOOR DB °F (°C) | ID WB °F (°C) | 60.8°F(16.0°C) | | | | | 64.4°F(18.0°C) | | | | | 67°F(19.4°C) | | | | | 71.6°F(22.0°C) | | | | |
|---|---|---|---|---|---|---|---|---|---|---|---|---|---|---|---|---|---|---|---|---|---|---|
| | | ID DB °F (°C) | 73.4°F (23.0°C) | 77.0°F (25.0°C) | 80.0°F (26.7°C) | 80.6°F (27.0°C) | 84.2°F (29.0°C) | 73.4°F (23.0°C) | 77.0°F (25.0°C) | 80.0°F (26.7°C) | 80.6°F (27.0°C) | 84.2°F (29.0°C) | 73.4°F (23.0°C) | 77.0°F (25.0°C) | 80.0°F (26.7°C) | 80.6°F (27.0°C) | 84.2°F (29.0°C) | 73.4°F (23.0°C) | 77.0°F (25.0°C) | 80.0°F (26.7°C) | 80.6°F (27.0°C) | 84.2°F (29.0°C) |
| 518 | 5°F (-15.0°C) | TC | 22609 | 22639 | 22664 | 22665 | 22695 | 23971 | 24000 | 24023 | 24028 | 24057 | 25403 | 25436 | 25465 | 25470 | 25498 | 26934 | 26963 | 26993 | 26997 | 27030 |
| | | S/T | 0.44 | 0.52 | 0.59 | 0.59 | 0.67 | 0.47 | 0.55 | 0.62 | 0.62 | 0.71 | 0.49 | 0.58 | 0.66 | 0.66 | 0.75 | 0.52 | 0.62 | 0.70 | 0.70 | 0.80 |
| | | PI | 1.53 | 1.53 | 1.53 | 1.53 | 1.53 | 1.62 | 1.62 | 1.62 | 1.63 | 1.63 | 1.72 | 1.72 | 1.72 | 1.72 | 1.72 | 1.82 | 1.82 | 1.83 | 1.83 | 1.83 |
| | 14°F (-10.0°C) | TC | 22717 | 22747 | 22772 | 22773 | 22803 | 24086 | 24114 | 24138 | 24143 | 24171 | 25525 | 25558 | 25586 | 25591 | 25620 | 27063 | 27092 | 27121 | 27126 | 27159 |
| | | S/T | 0.44 | 0.52 | 0.59 | 0.59 | 0.67 | 0.47 | 0.55 | 0.62 | 0.62 | 0.71 | 0.50 | 0.58 | 0.66 | 0.66 | 0.75 | 0.53 | 0.62 | 0.70 | 0.70 | 0.80 |
| | | PI | 1.36 | 1.36 | 1.36 | 1.37 | 1.37 | 1.44 | 1.45 | 1.45 | 1.45 | 1.45 | 1.53 | 1.53 | 1.53 | 1.53 | 1.54 | 1.62 | 1.62 | 1.63 | 1.63 | 1.63 |
| | 17°F (-8.3°C) | TC | 22753 | 22783 | 22808 | 22809 | 22839 | 24124 | 24152 | 24176 | 24181 | 24210 | 25565 | 25598 | 25627 | 25632 | 25660 | 27105 | 27135 | 27164 | 27169 | 27202 |
| | | S/T | 0.44 | 0.52 | 0.59 | 0.59 | 0.67 | 0.47 | 0.55 | 0.63 | 0.63 | 0.71 | 0.50 | 0.58 | 0.66 | 0.66 | 0.76 | 0.53 | 0.62 | 0.70 | 0.70 | 0.80 |
| | | PI | 1.31 | 1.31 | 1.31 | 1.31 | 1.31 | 1.38 | 1.39 | 1.39 | 1.39 | 1.39 | 1.47 | 1.47 | 1.47 | 1.47 | 1.47 | 1.56 | 1.56 | 1.56 | 1.56 | 1.56 |
| | 23°F (-5.0°C) | TC | 21956 | 21986 | 22009 | 22010 | 22040 | 23279 | 23307 | 23330 | 23335 | 23362 | 24670 | 24702 | 24730 | 24734 | 24762 | 26157 | 26185 | 26213 | 26218 | 26250 |
| | | S/T | 0.44 | 0.52 | 0.59 | 0.59 | 0.68 | 0.47 | 0.55 | 0.63 | 0.63 | 0.72 | 0.50 | 0.59 | 0.67 | 0.67 | 0.76 | 0.53 | 0.62 | 0.71 | 0.71 | 0.81 |
| | | PI | 1.31 | 1.31 | 1.31 | 1.31 | 1.32 | 1.39 | 1.39 | 1.39 | 1.39 | 1.39 | 1.47 | 1.47 | 1.48 | 1.48 | 1.48 | 1.56 | 1.56 | 1.57 | 1.57 | 1.57 |
| | 35°F (1.7°C) | TC | 20363 | 20391 | 20413 | 20414 | 20441 | 21590 | 21616 | 21637 | 21642 | 21667 | 22880 | 22910 | 22936 | 22940 | 22965 | 24259 | 24285 | 24312 | 24316 | 24346 |
| | | S/T | 0.45 | 0.52 | 0.60 | 0.60 | 0.68 | 0.47 | 0.56 | 0.63 | 0.63 | 0.72 | 0.50 | 0.59 | 0.67 | 0.67 | 0.76 | 0.53 | 0.62 | 0.71 | 0.71 | 0.81 |
| | | PI | 1.32 | 1.32 | 1.32 | 1.32 | 1.33 | 1.40 | 1.40 | 1.40 | 1.40 | 1.41 | 1.48 | 1.49 | 1.49 | 1.49 | 1.49 | 1.57 | 1.58 | 1.58 | 1.58 | 1.58 |
| | 41°F (5.0°C) | TC | 19526 | 19552 | 19573 | 19574 | 19600 | 20703 | 20727 | 20748 | 20752 | 20776 | 21939 | 21968 | 21992 | 21996 | 22021 | 23261 | 23287 | 23312 | 23316 | 23345 |
| | | S/T | 0.45 | 0.53 | 0.60 | 0.60 | 0.68 | 0.47 | 0.56 | 0.63 | 0.63 | 0.72 | 0.50 | 0.59 | 0.67 | 0.67 | 0.76 | 0.53 | 0.63 | 0.71 | 0.71 | 0.81 |
| | | PI | 1.21 | 1.21 | 1.21 | 1.21 | 1.22 | 1.28 | 1.28 | 1.29 | 1.29 | 1.29 | 1.36 | 1.36 | 1.36 | 1.36 | 1.37 | 1.44 | 1.44 | 1.45 | 1.45 | 1.45 |
| | 47°F (8.3°C) | TC | 18688 | 18714 | 18734 | 18734 | 18760 | 19815 | 19838 | 19858 | 19862 | 19885 | 20998 | 21026 | 21049 | 21053 | 21077 | 22264 | 22288 | 22312 | 22316 | 22343 |
| | | S/T | 0.45 | 0.53 | 0.60 | 0.60 | 0.68 | 0.48 | 0.56 | 0.63 | 0.63 | 0.72 | 0.50 | 0.59 | 0.67 | 0.67 | 0.77 | 0.54 | 0.63 | 0.71 | 0.71 | 0.81 |
| | | PI | 1.10 | 1.10 | 1.10 | 1.10 | 1.10 | 1.17 | 1.17 | 1.17 | 1.17 | 1.17 | 1.24 | 1.24 | 1.24 | 1.24 | 1.24 | 1.31 | 1.31 | 1.31 | 1.31 | 1.32 |
| | 50°F (10.0°C) | TC | 18913 | 18938 | 18959 | 18960 | 18985 | 20053 | 20076 | 20096 | 20100 | 20124 | 21251 | 21278 | 21302 | 21306 | 21330 | 22531 | 22556 | 22580 | 22584 | 22612 |
| | | S/T | 0.45 | 0.53 | 0.60 | 0.60 | 0.69 | 0.48 | 0.56 | 0.64 | 0.64 | 0.73 | 0.51 | 0.60 | 0.68 | 0.68 | 0.77 | 0.54 | 0.63 | 0.72 | 0.72 | 0.82 |
| | | PI | 1.13 | 1.13 | 1.13 | 1.13 | 1.13 | 1.20 | 1.20 | 1.20 | 1.20 | 1.20 | 1.27 | 1.27 | 1.27 | 1.27 | 1.27 | 1.35 | 1.35 | 1.35 | 1.35 | 1.35 |
| | 59°F (15.0°C) | TC | 19586 | 19613 | 19634 | 19635 | 19661 | 20767 | 20791 | 20812 | 20816 | 20841 | 22007 | 22036 | 22061 | 22065 | 22089 | 23333 | 23359 | 23384 | 23388 | 23417 |
| | | S/T | 0.45 | 0.53 | 0.61 | 0.61 | 0.69 | 0.48 | 0.56 | 0.64 | 0.64 | 0.73 | 0.51 | 0.60 | 0.68 | 0.68 | 0.77 | 0.54 | 0.63 | 0.72 | 0.72 | 0.82 |
| | | PI | 1.22 | 1.22 | 1.22 | 1.22 | 1.22 | 1.29 | 1.29 | 1.29 | 1.29 | 1.29 | 1.37 | 1.37 | 1.37 | 1.37 | 1.37 | 1.45 | 1.45 | 1.45 | 1.45 | 1.45 |
| | 68°F (20.0°C) | TC | 20260 | 20287 | 20309 | 20310 | 20337 | 21481 | 21506 | 21528 | 21532 | 21557 | 22764 | 22794 | 22819 | 22823 | 22849 | 24136 | 24162 | 24188 | 24192 | 24222 |
| | | S/T | 0.47 | 0.55 | 0.62 | 0.62 | 0.71 | 0.49 | 0.58 | 0.66 | 0.66 | 0.75 | 0.52 | 0.61 | 0.70 | 0.70 | 0.80 | 0.55 | 0.65 | 0.74 | 0.74 | 0.84 |
| | | PI | 1.30 | 1.30 | 1.31 | 1.31 | 1.31 | 1.38 | 1.38 | 1.38 | 1.38 | 1.39 | 1.46 | 1.47 | 1.47 | 1.47 | 1.47 | 1.55 | 1.55 | 1.55 | 1.56 | 1.56 |
| | 77°F (25.0°C) | TC | 20933 | 20962 | 20984 | 20985 | 21013 | 22195 | 22221 | 22243 | 22248 | 22274 | 23521 | 23552 | 23578 | 23582 | 23609 | 24938 | 24965 | 24993 | 24996 | 25028 |
| | | S/T | 0.47 | 0.55 | 0.63 | 0.63 | 0.72 | 0.50 | 0.59 | 0.67 | 0.67 | 0.76 | 0.53 | 0.62 | 0.71 | 0.71 | 0.81 | 0.56 | 0.66 | 0.75 | 0.75 | 0.85 |
| | | PI | 1.39 | 1.39 | 1.39 | 1.39 | 1.39 | 1.47 | 1.47 | 1.48 | 1.48 | 1.48 | 1.56 | 1.56 | 1.56 | 1.56 | 1.57 | 1.65 | 1.66 | 1.66 | 1.66 | 1.66 |
| | 82°F (27.8°C) | TC | 20939 | 20967 | 20990 | 20991 | 21019 | 22201 | 22227 | 22249 | 22254 | 22280 | 23527 | 23558 | 23584 | 23589 | 23615 | 24945 | 24972 | 24999 | 25003 | 25034 |
| | | S/T | 0.48 | 0.56 | 0.64 | 0.64 | 0.73 | 0.51 | 0.59 | 0.68 | 0.68 | 0.77 | 0.54 | 0.63 | 0.72 | 0.72 | 0.82 | 0.57 | 0.67 | 0.76 | 0.76 | 0.87 |
| | | PI | 1.53 | 1.53 | 1.53 | 1.53 | 1.54 | 1.62 | 1.62 | 1.63 | 1.63 | 1.63 | 1.72 | 1.72 | 1.72 | 1.72 | 1.73 | 1.82 | 1.82 | 1.83 | 1.83 | 1.83 |
| | 86°F (30.0°C) | TC | 20479 | 20506 | 20528 | 20529 | 20557 | 21713 | 21739 | 21760 | 21764 | 21790 | 23010 | 23040 | 23066 | 23070 | 23096 | 24396 | 24423 | 24450 | 24453 | 24484 |
| | | S/T | 0.48 | 0.57 | 0.65 | 0.65 | 0.74 | 0.51 | 0.60 | 0.68 | 0.68 | 0.78 | 0.54 | 0.64 | 0.73 | 0.73 | 0.83 | 0.58 | 0.68 | 0.77 | 0.77 | 0.88 |
| | | PI | 1.76 | 1.76 | 1.77 | 1.77 | 1.77 | 1.87 | 1.87 | 1.87 | 1.87 | 1.87 | 1.98 | 1.98 | 1.98 | 1.98 | 1.99 | 2.10 | 2.10 | 2.10 | 2.10 | 2.11 |
| | 95°F (35.0°C) | TC | 19443 | 19469 | 19490 | 19491 | 19517 | 20614 | 20639 | 20659 | 20663 | 20688 | 21846 | 21874 | 21899 | 21903 | 21927 | 23162 | 23187 | 23213 | 23216 | 23245 |
| | | S/T | 0.48 | 0.57 | 0.65 | 0.65 | 0.74 | 0.51 | 0.60 | 0.68 | 0.68 | 0.78 | 0.54 | 0.64 | 0.73 | 0.73 | 0.83 | 0.58 | 0.68 | 0.77 | 0.77 | 0.88 |
| | | PI | 2.28 | 2.28 | 2.29 | 2.29 | 2.29 | 2.42 | 2.42 | 2.42 | 2.42 | 2.43 | 2.56 | 2.56 | 2.57 | 2.57 | 2.57 | 2.72 | 2.72 | 2.72 | 2.72 | 2.73 |

Manufacturer reserves the right to change, at any time, specifications and designs without notice and without obligations.

# COOLING PERFORMANCE DATA (HEAT PUMP) (CONTINUED)

| AIRFLOW (CFM) | OUTDOOR DB °F (°C) | ID WB °F (°C) | 60.8°F(16.0°C) | | | | | 64.4°F(18.0°C) | | | | | 67°F(19.4°C) | | | | | 71.6°F(22.0°C) | | | | |
|---|---|---|---|---|---|---|---|---|---|---|---|---|---|---|---|---|---|---|---|---|---|---|
| | | ID DB °F (°C) | 73.4°F (23.0°C) | 77.0°F (25.0°C) | 80.0°F (26.7°C) | 80.6°F (27.0°C) | 84.2°F (29.0°C) | 73.4°F (23.0°C) | 77.0°F (25.0°C) | 80.0°F (26.7°C) | 80.6°F (27.0°C) | 84.2°F (29.0°C) | 73.4°F (23.0°C) | 77.0°F (25.0°C) | 80.0°F (26.7°C) | 80.6°F (27.0°C) | 84.2°F (29.0°C) | 73.4°F (23.0°C) | 77.0°F (25.0°C) | 80.0°F (26.7°C) | 80.6°F (27.0°C) | 84.2°F (29.0°C) |
| 588 | 5°F (-15.0°C) | TC | 24943 | 24977 | 25004 | 25005 | 25039 | 26447 | 26478 | 26504 | 26509 | 26541 | 28027 | 28063 | 28094 | 28100 | 28131 | 29715 | 29748 | 29780 | 29785 | 29822 |
| | | S/T | 0.49 | 0.57 | 0.65 | 0.65 | 0.74 | 0.51 | 0.60 | 0.69 | 0.69 | 0.78 | 0.55 | 0.64 | 0.73 | 0.73 | 0.83 | 0.58 | 0.68 | 0.77 | 0.77 | 0.88 |
| | | PI | 1.69 | 1.69 | 1.69 | 1.69 | 1.69 | 1.79 | 1.79 | 1.79 | 1.79 | 1.79 | 1.90 | 1.90 | 1.90 | 1.90 | 1.90 | 2.01 | 2.01 | 2.01 | 2.01 | 2.02 |
| | 14°F (-10.0°C) | TC | 25062 | 25096 | 25123 | 25124 | 25158 | 26573 | 26604 | 26631 | 26636 | 26667 | 28160 | 28197 | 28228 | 28234 | 28265 | 29857 | 29890 | 29922 | 29927 | 29964 |
| | | S/T | 0.49 | 0.57 | 0.65 | 0.65 | 0.74 | 0.52 | 0.61 | 0.69 | 0.69 | 0.78 | 0.55 | 0.64 | 0.73 | 0.73 | 0.83 | 0.58 | 0.68 | 0.77 | 0.77 | 0.88 |
| | | PI | 1.50 | 1.50 | 1.51 | 1.51 | 1.51 | 1.59 | 1.59 | 1.60 | 1.60 | 1.60 | 1.69 | 1.69 | 1.69 | 1.69 | 1.69 | 1.79 | 1.79 | 1.79 | 1.79 | 1.80 |
| | 17°F (-8.3°C) | TC | 25102 | 25136 | 25163 | 25164 | 25198 | 26615 | 26646 | 26673 | 26678 | 26710 | 28205 | 28242 | 28273 | 28278 | 28310 | 29904 | 29937 | 29969 | 29974 | 30011 |
| | | S/T | 0.49 | 0.57 | 0.65 | 0.65 | 0.74 | 0.52 | 0.61 | 0.69 | 0.69 | 0.79 | 0.55 | 0.64 | 0.73 | 0.73 | 0.83 | 0.58 | 0.68 | 0.78 | 0.78 | 0.88 |
| | | PI | 1.44 | 1.44 | 1.44 | 1.44 | 1.45 | 1.53 | 1.53 | 1.53 | 1.53 | 1.53 | 1.62 | 1.62 | 1.62 | 1.62 | 1.62 | 1.72 | 1.72 | 1.72 | 1.72 | 1.72 |
| | 23°F (-5.0°C) | TC | 24223 | 24256 | 24282 | 24283 | 24316 | 25683 | 25714 | 25739 | 25744 | 25775 | 27218 | 27253 | 27283 | 27288 | 27319 | 28858 | 28889 | 28920 | 28925 | 28961 |
| | | S/T | 0.49 | 0.58 | 0.65 | 0.65 | 0.75 | 0.52 | 0.61 | 0.69 | 0.69 | 0.79 | 0.55 | 0.65 | 0.74 | 0.74 | 0.84 | 0.58 | 0.69 | 0.78 | 0.78 | 0.89 |
| | | PI | 1.45 | 1.45 | 1.45 | 1.45 | 1.45 | 1.53 | 1.54 | 1.54 | 1.54 | 1.54 | 1.62 | 1.63 | 1.63 | 1.63 | 1.63 | 1.72 | 1.72 | 1.73 | 1.73 | 1.73 |
| | 35°F (1.7°C) | TC | 22466 | 22496 | 22521 | 22522 | 22552 | 23820 | 23848 | 23872 | 23876 | 23905 | 25243 | 25276 | 25304 | 25309 | 25337 | 26764 | 26793 | 26822 | 26826 | 26860 |
| | | S/T | 0.49 | 0.58 | 0.66 | 0.66 | 0.75 | 0.52 | 0.61 | 0.70 | 0.70 | 0.79 | 0.55 | 0.65 | 0.74 | 0.74 | 0.84 | 0.59 | 0.69 | 0.78 | 0.78 | 0.89 |
| | | PI | 1.46 | 1.46 | 1.46 | 1.46 | 1.46 | 1.55 | 1.55 | 1.55 | 1.55 | 1.55 | 1.64 | 1.64 | 1.64 | 1.64 | 1.64 | 1.74 | 1.74 | 1.74 | 1.74 | 1.74 |
| | 41°F (5.0°C) | TC | 21542 | 21571 | 21594 | 21595 | 21624 | 22840 | 22867 | 22890 | 22895 | 22922 | 24205 | 24236 | 24263 | 24268 | 24295 | 25663 | 25691 | 25719 | 25723 | 25755 |
| | | S/T | 0.49 | 0.58 | 0.66 | 0.66 | 0.75 | 0.52 | 0.61 | 0.70 | 0.70 | 0.80 | 0.56 | 0.65 | 0.74 | 0.74 | 0.84 | 0.59 | 0.69 | 0.78 | 0.78 | 0.89 |
| | | PI | 1.34 | 1.34 | 1.34 | 1.34 | 1.34 | 1.42 | 1.42 | 1.42 | 1.42 | 1.42 | 1.50 | 1.50 | 1.50 | 1.50 | 1.51 | 1.59 | 1.59 | 1.59 | 1.59 | 1.60 |
| | 47°F (8.3°C) | TC | 20618 | 20646 | 20668 | 20669 | 20697 | 21861 | 21887 | 21908 | 21913 | 21939 | 23167 | 23197 | 23223 | 23227 | 23253 | 24563 | 24589 | 24616 | 24620 | 24651 |
| | | S/T | 0.50 | 0.58 | 0.66 | 0.66 | 0.75 | 0.53 | 0.62 | 0.70 | 0.70 | 0.80 | 0.56 | 0.65 | 0.74 | 0.74 | 0.85 | 0.59 | 0.69 | 0.79 | 0.79 | 0.90 |
| | | PI | 1.21 | 1.22 | 1.22 | 1.22 | 1.22 | 1.29 | 1.29 | 1.29 | 1.29 | 1.29 | 1.36 | 1.37 | 1.37 | 1.37 | 1.37 | 1.45 | 1.45 | 1.45 | 1.45 | 1.45 |
| | 50°F (10.0°C) | TC | 20866 | 20894 | 20916 | 20917 | 20946 | 22123 | 22150 | 22171 | 22176 | 22202 | 23445 | 23476 | 23502 | 23506 | 23532 | 24858 | 24885 | 24912 | 24916 | 24947 |
| | | S/T | 0.50 | 0.58 | 0.66 | 0.66 | 0.76 | 0.53 | 0.62 | 0.70 | 0.70 | 0.80 | 0.56 | 0.66 | 0.75 | 0.75 | 0.85 | 0.59 | 0.70 | 0.79 | 0.79 | 0.90 |
| | | PI | 1.25 | 1.25 | 1.25 | 1.25 | 1.25 | 1.32 | 1.32 | 1.32 | 1.32 | 1.33 | 1.40 | 1.40 | 1.40 | 1.40 | 1.40 | 1.48 | 1.49 | 1.49 | 1.49 | 1.49 |
| | 59°F (15.0°C) | TC | 21609 | 21638 | 21661 | 21662 | 21692 | 22911 | 22938 | 22961 | 22966 | 22993 | 24280 | 24312 | 24339 | 24343 | 24370 | 25743 | 25771 | 25799 | 25803 | 25835 |
| | | S/T | 0.50 | 0.59 | 0.67 | 0.67 | 0.76 | 0.53 | 0.62 | 0.71 | 0.71 | 0.81 | 0.56 | 0.66 | 0.75 | 0.75 | 0.86 | 0.60 | 0.70 | 0.80 | 0.80 | 0.91 |
| | | PI | 1.34 | 1.34 | 1.34 | 1.34 | 1.35 | 1.42 | 1.42 | 1.43 | 1.43 | 1.43 | 1.51 | 1.51 | 1.51 | 1.51 | 1.51 | 1.60 | 1.60 | 1.60 | 1.60 | 1.60 |
| | 68°F (20.0°C) | TC | 22352 | 22382 | 22406 | 22407 | 22437 | 23699 | 23727 | 23751 | 23755 | 23784 | 25115 | 25148 | 25176 | 25180 | 25208 | 26628 | 26657 | 26686 | 26690 | 26724 |
| | | S/T | 0.51 | 0.60 | 0.69 | 0.69 | 0.78 | 0.54 | 0.64 | 0.73 | 0.73 | 0.83 | 0.58 | 0.68 | 0.77 | 0.77 | 0.88 | 0.61 | 0.72 | 0.82 | 0.82 | 0.93 |
| | | PI | 1.44 | 1.44 | 1.44 | 1.44 | 1.44 | 1.52 | 1.53 | 1.53 | 1.53 | 1.53 | 1.61 | 1.62 | 1.62 | 1.62 | 1.62 | 1.71 | 1.71 | 1.72 | 1.72 | 1.72 |
| | 77°F (25.0°C) | TC | 23095 | 23126 | 23151 | 23152 | 23183 | 24487 | 24516 | 24540 | 24545 | 24574 | 25950 | 25984 | 26013 | 26017 | 26047 | 27514 | 27543 | 27573 | 27578 | 27612 |
| | | S/T | 0.52 | 0.61 | 0.69 | 0.69 | 0.79 | 0.55 | 0.65 | 0.74 | 0.74 | 0.84 | 0.59 | 0.69 | 0.78 | 0.78 | 0.89 | 0.62 | 0.73 | 0.83 | 0.83 | 0.94 |
| | | PI | 1.53 | 1.53 | 1.54 | 1.54 | 1.54 | 1.62 | 1.63 | 1.63 | 1.63 | 1.63 | 1.72 | 1.72 | 1.73 | 1.73 | 1.73 | 1.83 | 1.83 | 1.83 | 1.83 | 1.83 |
| | 82°F (27.8°C) | TC | 23101 | 23133 | 23157 | 23158 | 23190 | 24494 | 24523 | 24547 | 24552 | 24581 | 25957 | 25991 | 26020 | 26025 | 26054 | 27521 | 27551 | 27581 | 27585 | 27620 |
| | | S/T | 0.53 | 0.62 | 0.70 | 0.70 | 0.80 | 0.56 | 0.66 | 0.75 | 0.75 | 0.85 | 0.59 | 0.70 | 0.79 | 0.79 | 0.90 | 0.63 | 0.74 | 0.84 | 0.84 | 0.95 |
| | | PI | 1.69 | 1.69 | 1.69 | 1.69 | 1.69 | 1.79 | 1.79 | 1.79 | 1.79 | 1.80 | 1.90 | 1.90 | 1.90 | 1.90 | 1.90 | 2.01 | 2.01 | 2.02 | 2.02 | 2.02 |
| | 86°F (30.0°C) | TC | 22593 | 22624 | 22648 | 22649 | 22680 | 23955 | 23983 | 24007 | 24012 | 24040 | 25386 | 25419 | 25448 | 25452 | 25481 | 26916 | 26945 | 26974 | 26979 | 27012 |
| | | S/T | 0.53 | 0.63 | 0.71 | 0.71 | 0.81 | 0.57 | 0.66 | 0.75 | 0.75 | 0.86 | 0.60 | 0.70 | 0.80 | 0.80 | 0.91 | 0.64 | 0.75 | 0.85 | 0.85 | 0.97 |
| | | PI | 1.94 | 1.95 | 1.95 | 1.95 | 1.95 | 2.06 | 2.06 | 2.06 | 2.06 | 2.07 | 2.18 | 2.19 | 2.19 | 2.19 | 2.19 | 2.31 | 2.32 | 2.32 | 2.32 | 2.32 |
| | 95°F (35.0°C) | TC | 21450 | 21479 | 21502 | 21503 | 21532 | 22743 | 22770 | 22793 | 22797 | 22824 | 24102 | 24133 | 24160 | 24165 | 24192 | 25554 | 25582 | 25610 | 25614 | 25646 |
| | | S/T | 0.53 | 0.63 | 0.71 | 0.71 | 0.81 | 0.57 | 0.66 | 0.75 | 0.75 | 0.86 | 0.60 | 0.70 | 0.80 | 0.80 | 0.91 | 0.64 | 0.75 | 0.85 | 0.85 | 0.97 |
| | | PI | 2.52 | 2.52 | 2.52 | 2.52 | 2.52 | 2.67 | 2.67 | 2.67 | 2.67 | 2.68 | 2.83 | 2.83 | 2.83 | 2.83 | 2.84 | 3.00 | 3.00 | 3.00 | 3.00 | 3.01 |

Manufacturer reserves the right to change, at any time, specifications and designs without notice and without obligations.

# HEATING PERFORMANCE DATA (HEAT PUMP)

| AIRFLOW (CFM) | OUTDOOR DB (°F) | | | | | | | | | | |
|---|---|---|---|---|---|---|---|---|---|---|---|
| | OUTDOOR DB °F (°C) | ID DB (°F) | | | | | PI: Power Input (kW) | | | | |
| | | Indoor Conditions (DB °F (°C) | | | | | Indoor Conditions (DB °F (°C) | | | | |
| | | 60.8°F (16.0°C) | 68°F (20.0°C) | 70°F (21.1°C) | 71.6°F (22.0°C) | 75.2°F (24.0°C) | 60.8°F (16.0°C) | 68°F (20.0°C) | 70°F (21.1°C) | 71.6°F (22.0°C) | 75.2°F (24.0°C) |
| 9k (115V) | | | | | | | | | | | |
| 129 | 5°F(-15.0°C) | 4858 | 4761 | 4738 | 4022 | 3986 | 0.95 | 0.95 | 0.96 | 0.96 | 0.96 |
| | 14°F(-10.0°C) | 5586 | 5474 | 5447 | 4624 | 4583 | 0.99 | 1.00 | 1.00 | 1.00 | 1.00 |
| | 17°F(-8.3°C) | 5829 | 5712 | 5683 | 4825 | 4782 | 1.00 | 1.01 | 1.01 | 1.02 | 1.02 |
| | 22°F(-5.6°C) | 6136 | 6013 | 5983 | 5079 | 5034 | 1.02 | 1.02 | 1.03 | 1.03 | 1.03 |
| | 27°F(-2.8°C) | 6443 | 6314 | 6282 | 5334 | 5286 | 1.03 | 1.04 | 1.04 | 1.04 | 1.05 |
| | 32°F(-0.0°C) | 6750 | 6615 | 6582 | 5588 | 5538 | 1.04 | 1.05 | 1.05 | 1.05 | 1.06 |
| | 35°F(1.7°C) | 6934 | 6795 | 6761 | 5740 | 5689 | 1.05 | 1.06 | 1.06 | 1.06 | 1.07 |
| | 37°F(2.8°C) | 7216 | 7072 | 7036 | 5974 | 5920 | 1.06 | 1.07 | 1.07 | 1.07 | 1.08 |
| | 42°F(5.6°C) | 7921 | 7762 | 7723 | 6557 | 6498 | 1.09 | 1.10 | 1.10 | 1.10 | 1.11 |
| | 44.6°F(7.0°C) | 8202 | 8038 | 7998 | 6791 | 6729 | 1.10 | 1.11 | 1.11 | 1.11 | 1.12 |
| | 47°F(8.3°C) | 8625 | 8453 | 8411 | 7141 | 7076 | 1.12 | 1.13 | 1.13 | 1.13 | 1.14 |
| | 52°F(11.1°C) | 8653 | 8480 | 8438 | 7164 | 7099 | 1.04 | 1.05 | 1.05 | 1.05 | 1.06 |
| | 57°F(13.9°C) | 8681 | 8507 | 8464 | 7186 | 7122 | 0.97 | 0.97 | 0.98 | 0.98 | 0.98 |
| | 59°F(15.0°C) | 8692 | 8518 | 8475 | 7196 | 7131 | 0.94 | 0.94 | 0.94 | 0.95 | 0.95 |
| | 62°F(16.7°C) | 8708 | 8534 | 8491 | 7209 | 7144 | 0.89 | 0.90 | 0.90 | 0.90 | 0.90 |
| | 64.4°F(18.0°C) | 8719 | 8545 | 8502 | 7218 | 7153 | 0.86 | 0.87 | 0.87 | 0.87 | 0.87 |
| 171 | 5°F(-15.0°C) | 5256 | 5151 | 5125 | 4713 | 4671 | 0.96 | 0.96 | 0.97 | 0.97 | 0.97 |
| | 14°F(-10.0°C) | 6043 | 5922 | 5893 | 5419 | 5370 | 1.00 | 1.01 | 1.01 | 1.01 | 1.01 |
| | 17°F(-8.3°C) | 6305 | 6179 | 6148 | 5654 | 5603 | 1.01 | 1.02 | 1.02 | 1.03 | 1.03 |
| | 22°F(-5.6°C) | 6638 | 6505 | 6472 | 5952 | 5898 | 1.03 | 1.03 | 1.04 | 1.04 | 1.04 |
| | 27°F(-2.8°C) | 6970 | 6830 | 6796 | 6250 | 6193 | 1.04 | 1.05 | 1.05 | 1.05 | 1.06 |
| | 32°F(-0.0°C) | 7302 | 7156 | 7120 | 6548 | 6489 | 1.05 | 1.06 | 1.06 | 1.07 | 1.07 |
| | 35°F(1.7°C) | 7501 | 7351 | 7315 | 6726 | 6666 | 1.06 | 1.07 | 1.07 | 1.07 | 1.08 |
| | 37°F(2.8°C) | 7806 | 7650 | 7612 | 7000 | 6937 | 1.07 | 1.08 | 1.08 | 1.09 | 1.09 |
| | 42°F(5.6°C) | 8569 | 8397 | 8355 | 7683 | 7614 | 1.10 | 1.11 | 1.11 | 1.11 | 1.12 |
| | 44.6°F(7.0°C) | 8874 | 8696 | 8653 | 7957 | 7885 | 1.11 | 1.12 | 1.12 | 1.13 | 1.13 |
| | 47°F(8.3°C) | 9331 | 9145 | 9099 | 8367 | 8292 | 1.13 | 1.14 | 1.14 | 1.14 | 1.15 |
| | 52°F(11.1°C) | 9361 | 9174 | 9128 | 8394 | 8318 | 1.05 | 1.06 | 1.06 | 1.07 | 1.07 |
| | 57°F(13.9°C) | 9391 | 9203 | 9157 | 8421 | 8345 | 0.98 | 0.98 | 0.99 | 0.99 | 0.99 |
| | 59°F(15.0°C) | 9403 | 9215 | 9169 | 8431 | 8355 | 0.94 | 0.95 | 0.95 | 0.96 | 0.96 |
| | 62°F(16.7°C) | 9421 | 9232 | 9186 | 8447 | 8371 | 0.90 | 0.91 | 0.91 | 0.91 | 0.91 |
| | 64.4°F(18.0°C) | 9433 | 9244 | 9198 | 8458 | 8382 | 0.87 | 0.87 | 0.88 | 0.88 | 0.88 |
| 206 | 5°F(-15.0°C) | 5686 | 5572 | 5545 | 5522 | 5473 | 0.97 | 0.97 | 0.98 | 0.98 | 0.98 |
| | 14°F(-10.0°C) | 6538 | 6407 | 6375 | 6349 | 6292 | 1.01 | 1.02 | 1.02 | 1.02 | 1.03 |
| | 17°F(-8.3°C) | 6821 | 6685 | 6652 | 6625 | 6565 | 1.02 | 1.03 | 1.03 | 1.04 | 1.04 |
| | 22°F(-5.6°C) | 7181 | 7037 | 7002 | 6974 | 6911 | 1.04 | 1.04 | 1.05 | 1.05 | 1.05 |
| | 27°F(-2.8°C) | 7540 | 7389 | 7352 | 7323 | 7257 | 1.05 | 1.06 | 1.06 | 1.06 | 1.07 |
| | 32°F(-0.0°C) | 7900 | 7742 | 7703 | 7672 | 7603 | 1.06 | 1.07 | 1.07 | 1.08 | 1.08 |
| | 35°F(1.7°C) | 8115 | 7953 | 7913 | 7882 | 7811 | 1.07 | 1.08 | 1.08 | 1.08 | 1.09 |
| | 37°F(2.8°C) | 8445 | 8276 | 8235 | 8202 | 8128 | 1.08 | 1.09 | 1.09 | 1.10 | 1.10 |
| | 42°F(5.6°C) | 9270 | 9085 | 9039 | 9003 | 8922 | 1.11 | 1.12 | 1.12 | 1.13 | 1.13 |
| | 44.6°F(7.0°C) | 9600 | 9408 | 9361 | 9323 | 9239 | 1.12 | 1.13 | 1.13 | 1.14 | 1.14 |
| | 47°F(8.3°C) | 10095 | 9893 | 9843 | 9804 | 9716 | 1.14 | 1.15 | 1.15 | 1.15 | 1.16 |
| | 52°F(11.1°C) | 10127 | 9925 | 9875 | 9835 | 9747 | 1.06 | 1.07 | 1.07 | 1.08 | 1.08 |
| | 57°F(13.9°C) | 10159 | 9956 | 9906 | 9867 | 9778 | 0.99 | 0.99 | 1.00 | 1.00 | 1.00 |
| | 59°F(15.0°C) | 10172 | 9969 | 9919 | 9879 | 9790 | 0.95 | 0.96 | 0.96 | 0.97 | 0.97 |
| | 62°F(16.7°C) | 10192 | 9988 | 9938 | 9898 | 9809 | 0.91 | 0.91 | 0.92 | 0.92 | 0.92 |
| | 64.4°F(18.0°C) | 10205 | 10001 | 9951 | 9911 | 9822 | 0.88 | 0.88 | 0.89 | 0.89 | 0.89 |

**Manufacturer reserves the right to change, at any time, specifications and designs without notice and without obligations.**

# HEATING PERFORMANCE DATA (HEAT PUMP)

| AIRFLOW (CFM) | OUTDOOR DB (°F) | ID DB (°F) | | | | | PI: Power Input (kW) | | | | |
|---|---|---|---|---|---|---|---|---|---|---|---|
| | OUTDOOR DB °F (°C) | Indoor Conditions (DB °F (°C) | | | | | Indoor Conditions (DB °F (°C) | | | | |
| | | 60.8°F (16.0°C) | 68°F (20.0°C) | 70°F (21.1°C) | 71.6°F (22.0°C) | 75.2°F (24.0°C) | 60.8°F (16.0°C) | 68°F (20.0°C) | 70°F (21.1°C) | 71.6°F (22.0°C) | 75.2°F (24.0°C) |
| 229 | 5°F(-15.0°C) | 6151 | 6028 | 5998 | 5974 | 5921 | 0.98 | 0.98 | 0.99 | 0.99 | 0.99 |
| | 14°F(-10.0°C) | 7073 | 6931 | 6897 | 6869 | 6807 | 1.02 | 1.03 | 1.03 | 1.03 | 1.04 |
| | 17°F(-8.3°C) | 7380 | 7232 | 7196 | 7167 | 7103 | 1.03 | 1.04 | 1.04 | 1.05 | 1.05 |
| | 22°F(-5.6°C) | 7768 | 7613 | 7575 | 7545 | 7477 | 1.05 | 1.06 | 1.06 | 1.06 | 1.06 |
| | 27°F(-2.8°C) | 8157 | 7994 | 7954 | 7922 | 7851 | 1.06 | 1.07 | 1.07 | 1.07 | 1.08 |
| | 32°F(-0.0°C) | 8546 | 8375 | 8333 | 8300 | 8225 | 1.07 | 1.08 | 1.08 | 1.09 | 1.09 |
| | 35°F(1.7°C) | 8779 | 8604 | 8561 | 8526 | 8450 | 1.08 | 1.09 | 1.09 | 1.10 | 1.10 |
| | 37°F(2.8°C) | 9136 | 8953 | 8909 | 8873 | 8793 | 1.09 | 1.10 | 1.10 | 1.11 | 1.11 |
| | 42°F(5.6°C) | 10029 | 9828 | 9779 | 9740 | 9652 | 1.12 | 1.13 | 1.13 | 1.14 | 1.14 |
| | 44.6°F(7.0°C) | 10385 | 10178 | 10127 | 10086 | 9996 | 1.13 | 1.14 | 1.15 | 1.15 | 1.15 |
| | 47°F(8.3°C) | 10921 | 10702 | 10649 | 10606 | 10511 | 1.15 | 1.16 | 1.16 | 1.17 | 1.17 |
| | 52°F(11.1°C) | 10956 | 10737 | 10683 | 10640 | 10544 | 1.07 | 1.08 | 1.08 | 1.09 | 1.09 |
| | 57°F(13.9°C) | 10991 | 10771 | 10717 | 10674 | 10578 | 1.00 | 1.00 | 1.01 | 1.01 | 1.01 |
| | 59°F(15.0°C) | 11005 | 10785 | 10731 | 10688 | 10592 | 0.96 | 0.97 | 0.97 | 0.98 | 0.98 |
| | 62°F(16.7°C) | 11026 | 10805 | 10751 | 10708 | 10612 | 0.92 | 0.92 | 0.93 | 0.93 | 0.93 |
| | 64.4°F(18.0°C) | 11040 | 10819 | 10765 | 10722 | 10625 | 0.89 | 0.89 | 0.89 | 0.90 | 0.90 |
| 12k (115V) | | | | | | | | | | | |
| 176 | 5°F(-15.0°C) | 6283 | 6157 | 6126 | 4610 | 4568 | 0.82 | 0.83 | 0.83 | 0.83 | 0.83 |
| | 14°F(-10.0°C) | 7248 | 7103 | 7068 | 5318 | 5270 | 0.91 | 0.92 | 0.92 | 0.92 | 0.92 |
| | 17°F(-8.3°C) | 7570 | 7419 | 7382 | 5555 | 5505 | 0.94 | 0.95 | 0.95 | 0.95 | 0.95 |
| | 22°F(-5.6°C) | 8326 | 8160 | 8119 | 6109 | 6054 | 0.99 | 1.00 | 1.00 | 1.00 | 1.00 |
| | 27°F(-2.8°C) | 9082 | 8901 | 8856 | 6664 | 6604 | 1.04 | 1.05 | 1.05 | 1.05 | 1.06 |
| | 32°F(-0.0°C) | 9839 | 9642 | 9594 | 7219 | 7154 | 1.09 | 1.10 | 1.10 | 1.10 | 1.11 |
| | 35°F(1.7°C) | 10292 | 10087 | 10036 | 7552 | 7484 | 1.12 | 1.13 | 1.13 | 1.13 | 1.14 |
| | 37°F(2.8°C) | 10732 | 10518 | 10465 | 7875 | 7804 | 1.13 | 1.14 | 1.14 | 1.15 | 1.15 |
| | 42°F(5.6°C) | 11832 | 11595 | 11537 | 8682 | 8603 | 1.17 | 1.18 | 1.18 | 1.18 | 1.19 |
| | 44.6°F(7.0°C) | 12272 | 12026 | 11966 | 9004 | 8923 | 1.18 | 1.19 | 1.20 | 1.20 | 1.20 |
| | 47°F(8.3°C) | 12931 | 12673 | 12609 | 9488 | 9403 | 1.21 | 1.22 | 1.22 | 1.22 | 1.23 |
| | 52°F(11.1°C) | 12558 | 12307 | 12246 | 9215 | 9132 | 1.10 | 1.11 | 1.12 | 1.12 | 1.12 |
| | 57°F(13.9°C) | 12185 | 11942 | 11882 | 8941 | 8861 | 1.00 | 1.01 | 1.01 | 1.02 | 1.02 |
| | 59°F(15.0°C) | 12036 | 11795 | 11737 | 8832 | 8752 | 0.96 | 0.97 | 0.97 | 0.97 | 0.98 |
| | 62°F(16.7°C) | 11812 | 11576 | 11518 | 8667 | 8589 | 0.90 | 0.91 | 0.91 | 0.91 | 0.92 |
| | 64.4°F(18.0°C) | 11663 | 11430 | 11373 | 8558 | 8481 | 0.86 | 0.87 | 0.87 | 0.87 | 0.88 |
| 241 | 5°F(-15.0°C) | 6466 | 6336 | 6305 | 5458 | 5409 | 0.83 | 0.83 | 0.84 | 0.84 | 0.84 |
| | 14°F(-10.0°C) | 7459 | 7310 | 7274 | 6297 | 6240 | 0.92 | 0.92 | 0.93 | 0.93 | 0.93 |
| | 17°F(-8.3°C) | 7791 | 7635 | 7597 | 6576 | 6517 | 0.95 | 0.95 | 0.96 | 0.96 | 0.96 |
| | 22°F(-5.6°C) | 8569 | 8397 | 8355 | 7233 | 7168 | 1.00 | 1.01 | 1.01 | 1.01 | 1.01 |
| | 27°F(-2.8°C) | 9347 | 9160 | 9114 | 7890 | 7819 | 1.05 | 1.06 | 1.06 | 1.06 | 1.07 |
| | 32°F(-0.0°C) | 10125 | 9923 | 9873 | 8547 | 8470 | 1.10 | 1.11 | 1.11 | 1.11 | 1.12 |
| | 35°F(1.7°C) | 10592 | 10380 | 10328 | 8942 | 8861 | 1.13 | 1.14 | 1.14 | 1.14 | 1.15 |
| | 37°F(2.8°C) | 11045 | 10824 | 10770 | 9324 | 9240 | 1.14 | 1.15 | 1.16 | 1.16 | 1.16 |
| | 42°F(5.6°C) | 12176 | 11933 | 11873 | 10279 | 10186 | 1.18 | 1.19 | 1.19 | 1.20 | 1.20 |
| | 44.6°F(7.0°C) | 12629 | 12376 | 12315 | 10661 | 10565 | 1.20 | 1.21 | 1.21 | 1.21 | 1.22 |
| | 47°F(8.3°C) | 13308 | 13042 | 12977 | 11234 | 11133 | 1.22 | 1.23 | 1.23 | 1.23 | 1.24 |
| | 52°F(11.1°C) | 12924 | 12666 | 12602 | 10910 | 10812 | 1.12 | 1.12 | 1.13 | 1.13 | 1.13 |
| | 57°F(13.9°C) | 12540 | 12290 | 12228 | 10586 | 10491 | 1.01 | 1.02 | 1.02 | 1.03 | 1.03 |
| | 59°F(15.0°C) | 12387 | 12139 | 12078 | 10457 | 10362 | 0.97 | 0.98 | 0.98 | 0.98 | 0.99 |
| | 62°F(16.7°C) | 12156 | 11913 | 11854 | 10262 | 10170 | 0.91 | 0.92 | 0.92 | 0.92 | 0.93 |
| | 64.4°F(18.0°C) | 12003 | 11763 | 11704 | 10132 | 10041 | 0.87 | 0.88 | 0.88 | 0.88 | 0.88 |

**Manufacturer reserves the right to change, at any time, specifications and designs without notice and without obligations.**

# HEATING PERFORMANCE DATA (HEAT PUMP)

| AIRFLOW (CFM) | OUTDOOR DB (°F) | | | | | | | | | | |
|---|---|---|---|---|---|---|---|---|---|---|---|
| | OUTDOOR DB °F (°C) | ID DB (°F) | | | | | PI: Power Input (kW) | | | | |
| | | Indoor Conditions (DB °F (°C) | | | | | Indoor Conditions (DB °F (°C) | | | | |
| | | 60.8°F (16.0°C) | 68°F (20.0°C) | 70°F (21.1°C) | 71.6°F (22.0°C) | 75.2°F (24.0°C) | 60.8°F (16.0°C) | 68°F (20.0°C) | 70°F (21.1°C) | 71.6°F (22.0°C) | 75.2°F (24.0°C) |
| 294 | 5°F(-15.0°C) | 6654 | 6521 | 6488 | 6462 | 6404 | 0.84 | 0.84 | 0.84 | 0.85 | 0.85 |
| | 14°F(-10.0°C) | 7677 | 7523 | 7485 | 7455 | 7388 | 0.93 | 0.93 | 0.94 | 0.94 | 0.94 |
| | 17°F(-8.3°C) | 8017 | 7857 | 7818 | 7787 | 7716 | 0.96 | 0.96 | 0.97 | 0.97 | 0.97 |
| | 22°F(-5.6°C) | 8818 | 8642 | 8599 | 8564 | 8487 | 1.01 | 1.02 | 1.02 | 1.02 | 1.02 |
| | 27°F(-2.8°C) | 9619 | 9427 | 9380 | 9342 | 9258 | 1.06 | 1.07 | 1.07 | 1.07 | 1.08 |
| | 32°F(-0.0°C) | 10420 | 10212 | 10161 | 10120 | 10029 | 1.11 | 1.12 | 1.12 | 1.12 | 1.13 |
| | 35°F(1.7°C) | 10901 | 10683 | 10629 | 10587 | 10491 | 1.14 | 1.15 | 1.15 | 1.16 | 1.16 |
| | 37°F(2.8°C) | 11367 | 11139 | 11083 | 11039 | 10940 | 1.16 | 1.17 | 1.17 | 1.17 | 1.18 |
| | 42°F(5.6°C) | 12531 | 12280 | 12219 | 12170 | 12061 | 1.19 | 1.20 | 1.21 | 1.21 | 1.21 |
| | 44.6°F(7.0°C) | 12997 | 12737 | 12673 | 12623 | 12509 | 1.21 | 1.22 | 1.22 | 1.22 | 1.23 |
| | 47°F(8.3°C) | 13696 | 13422 | 13355 | 13301 | 13181 | 1.23 | 1.24 | 1.24 | 1.24 | 1.25 |
| | 52°F(11.1°C) | 13301 | 13035 | 12969 | 12918 | 12801 | 1.13 | 1.14 | 1.14 | 1.14 | 1.15 |
| | 57°F(13.9°C) | 12906 | 12647 | 12584 | 12534 | 12421 | 1.02 | 1.03 | 1.03 | 1.04 | 1.04 |
| | 59°F(15.0°C) | 12748 | 12493 | 12430 | 12380 | 12269 | 0.98 | 0.99 | 0.99 | 0.99 | 1.00 |
| | 62°F(16.7°C) | 12511 | 12260 | 12199 | 12150 | 12041 | 0.92 | 0.93 | 0.93 | 0.93 | 0.94 |
| | 64.4°F(18.0°C) | 12353 | 12105 | 12045 | 11997 | 11889 | 0.88 | 0.89 | 0.89 | 0.89 | 0.89 |
| 312 | 5°F(-15.0°C) | 6848 | 6711 | 6677 | 6651 | 6591 | 0.84 | 0.85 | 0.85 | 0.85 | 0.86 |
| | 14°F(-10.0°C) | 7900 | 7742 | 7703 | 7673 | 7604 | 0.94 | 0.94 | 0.95 | 0.95 | 0.95 |
| | 17°F(-8.3°C) | 8251 | 8086 | 8045 | 8013 | 7941 | 0.97 | 0.97 | 0.98 | 0.98 | 0.98 |
| | 22°F(-5.6°C) | 9075 | 8894 | 8849 | 8814 | 8734 | 1.02 | 1.03 | 1.03 | 1.03 | 1.03 |
| | 27°F(-2.8°C) | 9899 | 9701 | 9653 | 9614 | 9528 | 1.07 | 1.08 | 1.08 | 1.08 | 1.09 |
| | 32°F(-0.0°C) | 10724 | 10509 | 10457 | 10415 | 10321 | 1.12 | 1.13 | 1.13 | 1.14 | 1.14 |
| | 35°F(1.7°C) | 11218 | 10994 | 10939 | 10895 | 10797 | 1.15 | 1.16 | 1.17 | 1.17 | 1.17 |
| | 37°F(2.8°C) | 11698 | 11464 | 11406 | 11361 | 11258 | 1.17 | 1.18 | 1.18 | 1.18 | 1.19 |
| | 42°F(5.6°C) | 12896 | 12638 | 12575 | 12525 | 12412 | 1.21 | 1.22 | 1.22 | 1.22 | 1.22 |
| | 44.6°F(7.0°C) | 13375 | 13108 | 13042 | 12990 | 12873 | 1.22 | 1.23 | 1.23 | 1.23 | 1.24 |
| | 47°F(8.3°C) | 14094 | 13813 | 13744 | 13689 | 13565 | 1.24 | 1.25 | 1.26 | 1.26 | 1.26 |
| | 52°F(11.1°C) | 13688 | 13414 | 13347 | 13294 | 13174 | 1.14 | 1.15 | 1.15 | 1.15 | 1.16 |
| | 57°F(13.9°C) | 13281 | 13016 | 12951 | 12899 | 12783 | 1.03 | 1.04 | 1.04 | 1.05 | 1.05 |
| | 59°F(15.0°C) | 13119 | 12856 | 12792 | 12741 | 12626 | 0.99 | 1.00 | 1.00 | 1.00 | 1.01 |
| | 62°F(16.7°C) | 12875 | 12617 | 12554 | 12504 | 12392 | 0.93 | 0.94 | 0.94 | 0.94 | 0.94 |
| | 64.4°F(18.0°C) | 12712 | 12458 | 12396 | 12346 | 12235 | 0.89 | 0.90 | 0.90 | 0.90 | 0.90 |
| 9k | | | | | | | | | | | |
| 176 | 5°F(-15.0°C) | 6495 | 6365 | 6333 | 4765 | 4722 | 0.88 | 0.89 | 0.89 | 0.89 | 0.90 |
| | 14°F(-10.0°C) | 7458 | 7309 | 7272 | 5472 | 5423 | 0.95 | 0.96 | 0.96 | 0.96 | 0.96 |
| | 17°F(-8.3°C) | 7779 | 7623 | 7585 | 5708 | 5656 | 0.97 | 0.98 | 0.98 | 0.98 | 0.98 |
| | 22°F(-5.6°C) | 8008 | 7848 | 7808 | 5876 | 5823 | 0.98 | 0.98 | 0.99 | 0.99 | 0.99 |
| | 27°F(-2.8°C) | 8237 | 8072 | 8032 | 6044 | 5990 | 0.98 | 0.99 | 0.99 | 0.99 | 1.00 |
| | 32°F(-0.0°C) | 8466 | 8297 | 8255 | 6212 | 6156 | 0.99 | 1.00 | 1.00 | 1.00 | 1.00 |
| | 35°F(1.7°C) | 8604 | 8432 | 8390 | 6313 | 6256 | 0.99 | 1.00 | 1.00 | 1.00 | 1.01 |
| | 37°F(2.8°C) | 9110 | 8928 | 8884 | 6685 | 6625 | 1.01 | 1.02 | 1.02 | 1.02 | 1.03 |
| | 42°F(5.6°C) | 10377 | 10170 | 10119 | 7614 | 7546 | 1.06 | 1.07 | 1.07 | 1.07 | 1.08 |
| | 44.6°F(7.0°C) | 10884 | 10666 | 10613 | 7986 | 7914 | 1.08 | 1.09 | 1.09 | 1.09 | 1.10 |
| | 47°F(8.3°C) | 11644 | 11411 | 11354 | 8544 | 8467 | 1.11 | 1.12 | 1.12 | 1.12 | 1.13 |
| | 52°F(11.1°C) | 11756 | 11521 | 11463 | 8626 | 8548 | 1.05 | 1.06 | 1.06 | 1.06 | 1.06 |
| | 57°F(13.9°C) | 11868 | 11631 | 11573 | 8708 | 8630 | 0.98 | 0.99 | 0.99 | 0.99 | 1.00 |
| | 59°F(15.0°C) | 11913 | 11675 | 11616 | 8741 | 8663 | 0.96 | 0.96 | 0.97 | 0.97 | 0.97 |
| | 62°F(16.7°C) | 11980 | 11741 | 11682 | 8791 | 8711 | 0.92 | 0.93 | 0.93 | 0.93 | 0.93 |
| | 64.4°F(18.0°C) | 12025 | 11785 | 11726 | 8824 | 8744 | 0.89 | 0.90 | 0.90 | 0.90 | 0.91 |

**Manufacturer reserves the right to change, at any time, specifications and designs without notice and without obligations.**

# HEATING PERFORMANCE DATA (HEAT PUMP)

| AIRFLOW (CFM) | OUTDOOR DB (°F) | | | | | | | | | | |
|---|---|---|---|---|---|---|---|---|---|---|---|
| | OUTDOOR DB °F (°C) | ID DB (°F) | | | | | PI: Power Input (kW) | | | | |
| | | Indoor Conditions (DB °F (°C) | | | | | Indoor Conditions (DB °F (°C) | | | | |
| | | 60.8°F (16.0°C) | 68°F (20.0°C) | 70°F (21.1°C) | 71.6°F (22.0°C) | 75.2°F (24.0°C) | 60.8°F (16.0°C) | 68°F (20.0°C) | 70°F (21.1°C) | 71.6°F (22.0°C) | 75.2°F (24.0°C) |
| 241 | 5°F(-15.0°C) | 6684 | 6550 | 6517 | 5642 | 5591 | 0.89 | 0.90 | 0.90 | 0.90 | 0.91 |
| | 14°F(-10.0°C) | 7675 | 7521 | 7484 | 6479 | 6421 | 0.96 | 0.97 | 0.97 | 0.97 | 0.97 |
| | 17°F(-8.3°C) | 8005 | 7845 | 7806 | 6758 | 6697 | 0.98 | 0.99 | 0.99 | 0.99 | 0.99 |
| | 22°F(-5.6°C) | 8241 | 8076 | 8036 | 6957 | 6894 | 0.99 | 0.99 | 1.00 | 1.00 | 1.00 |
| | 27°F(-2.8°C) | 8477 | 8307 | 8266 | 7156 | 7092 | 0.99 | 1.00 | 1.00 | 1.00 | 1.01 |
| | 32°F(-0.0°C) | 8713 | 8539 | 8496 | 7355 | 7289 | 1.00 | 1.01 | 1.01 | 1.01 | 1.01 |
| | 35°F(1.7°C) | 8854 | 8677 | 8634 | 7475 | 7407 | 1.00 | 1.01 | 1.01 | 1.01 | 1.02 |
| | 37°F(2.8°C) | 9376 | 9188 | 9142 | 7915 | 7844 | 1.02 | 1.03 | 1.03 | 1.03 | 1.04 |
| | 42°F(5.6°C) | 10679 | 10466 | 10414 | 9015 | 8934 | 1.07 | 1.08 | 1.08 | 1.09 | 1.09 |
| | 44.6°F(7.0°C) | 11201 | 10977 | 10922 | 9455 | 9370 | 1.09 | 1.10 | 1.10 | 1.11 | 1.11 |
| | 47°F(8.3°C) | 11983 | 11743 | 11685 | 10116 | 10025 | 1.12 | 1.13 | 1.13 | 1.14 | 1.14 |
| | 52°F(11.1°C) | 12099 | 11857 | 11797 | 10213 | 10121 | 1.06 | 1.07 | 1.07 | 1.07 | 1.07 |
| | 57°F(13.9°C) | 12214 | 11970 | 11910 | 10311 | 10218 | 0.99 | 1.00 | 1.00 | 1.00 | 1.01 |
| | 59°F(15.0°C) | 12260 | 12015 | 11955 | 10350 | 10256 | 0.97 | 0.97 | 0.98 | 0.98 | 0.98 |
| | 62°F(16.7°C) | 12329 | 12083 | 12022 | 10408 | 10314 | 0.93 | 0.93 | 0.94 | 0.94 | 0.94 |
| | 64.4°F(18.0°C) | 12375 | 12128 | 12067 | 10447 | 10353 | 0.90 | 0.91 | 0.91 | 0.91 | 0.92 |
| 294 | 5°F(-15.0°C) | 6878 | 6741 | 6707 | 6680 | 6620 | 0.90 | 0.91 | 0.91 | 0.91 | 0.92 |
| | 14°F(-10.0°C) | 7898 | 7740 | 7702 | 7671 | 7602 | 0.97 | 0.97 | 0.98 | 0.98 | 0.98 |
| | 17°F(-8.3°C) | 8238 | 8074 | 8033 | 8001 | 7929 | 0.99 | 1.00 | 1.00 | 1.00 | 1.00 |
| | 22°F(-5.6°C) | 8481 | 8312 | 8270 | 8237 | 8163 | 1.00 | 1.00 | 1.01 | 1.01 | 1.01 |
| | 27°F(-2.8°C) | 8724 | 8549 | 8507 | 8473 | 8396 | 1.00 | 1.01 | 1.01 | 1.01 | 1.02 |
| | 32°F(-0.0°C) | 8967 | 8787 | 8743 | 8708 | 8630 | 1.01 | 1.02 | 1.02 | 1.02 | 1.02 |
| | 35°F(1.7°C) | 9112 | 8930 | 8885 | 8850 | 8770 | 1.01 | 1.02 | 1.02 | 1.02 | 1.03 |
| | 37°F(2.8°C) | 9649 | 9456 | 9409 | 9371 | 9287 | 1.03 | 1.04 | 1.04 | 1.04 | 1.05 |
| | 42°F(5.6°C) | 10991 | 10771 | 10717 | 10674 | 10578 | 1.08 | 1.09 | 1.09 | 1.10 | 1.10 |
| | 44.6°F(7.0°C) | 11527 | 11297 | 11240 | 11195 | 11094 | 1.10 | 1.11 | 1.11 | 1.12 | 1.12 |
| | 47°F(8.3°C) | 12332 | 12086 | 12025 | 11977 | 11869 | 1.13 | 1.14 | 1.15 | 1.15 | 1.15 |
| | 52°F(11.1°C) | 12451 | 12202 | 12141 | 12092 | 11983 | 1.07 | 1.08 | 1.08 | 1.08 | 1.09 |
| | 57°F(13.9°C) | 12570 | 12318 | 12257 | 12208 | 12098 | 1.00 | 1.01 | 1.01 | 1.01 | 1.02 |
| | 59°F(15.0°C) | 12617 | 12365 | 12303 | 12254 | 12144 | 0.98 | 0.98 | 0.99 | 0.99 | 0.99 |
| | 62°F(16.7°C) | 12688 | 12435 | 12372 | 12323 | 12212 | 0.94 | 0.94 | 0.95 | 0.95 | 0.95 |
| | 64.4°F(18.0°C) | 12736 | 12481 | 12419 | 12369 | 12258 | 0.91 | 0.92 | 0.92 | 0.92 | 0.92 |
| 312 | 5°F(-15.0°C) | 7079 | 6937 | 6902 | 6875 | 6813 | 0.91 | 0.92 | 0.92 | 0.92 | 0.93 |
| | 14°F(-10.0°C) | 8128 | 7966 | 7926 | 7894 | 7823 | 0.98 | 0.98 | 0.99 | 0.99 | 0.99 |
| | 17°F(-8.3°C) | 8478 | 8309 | 8267 | 8234 | 8160 | 1.00 | 1.01 | 1.01 | 1.01 | 1.02 |
| | 22°F(-5.6°C) | 8728 | 8554 | 8511 | 8477 | 8401 | 1.01 | 1.01 | 1.02 | 1.02 | 1.02 |
| | 27°F(-2.8°C) | 8978 | 8798 | 8754 | 8719 | 8641 | 1.01 | 1.02 | 1.02 | 1.02 | 1.03 |
| | 32°F(-0.0°C) | 9228 | 9043 | 8998 | 8962 | 8881 | 1.02 | 1.03 | 1.03 | 1.03 | 1.03 |
| | 35°F(1.7°C) | 9378 | 9190 | 9144 | 9108 | 9026 | 1.02 | 1.03 | 1.03 | 1.03 | 1.04 |
| | 37°F(2.8°C) | 9930 | 9731 | 9683 | 9644 | 9557 | 1.04 | 1.05 | 1.05 | 1.05 | 1.06 |
| | 42°F(5.6°C) | 11311 | 11084 | 11029 | 10985 | 10886 | 1.09 | 1.10 | 1.10 | 1.11 | 1.11 |
| | 44.6°F(7.0°C) | 11863 | 11626 | 11568 | 11521 | 11418 | 1.11 | 1.12 | 1.13 | 1.13 | 1.13 |
| | 47°F(8.3°C) | 12691 | 12438 | 12375 | 12326 | 12215 | 1.15 | 1.15 | 1.16 | 1.16 | 1.16 |
| | 52°F(11.1°C) | 12814 | 12557 | 12495 | 12445 | 12333 | 1.08 | 1.09 | 1.09 | 1.09 | 1.10 |
| | 57°F(13.9°C) | 12936 | 12677 | 12614 | 12563 | 12450 | 1.01 | 1.02 | 1.02 | 1.02 | 1.03 |
| | 59°F(15.0°C) | 12985 | 12725 | 12661 | 12611 | 12497 | 0.99 | 0.99 | 1.00 | 1.00 | 1.00 |
| | 62°F(16.7°C) | 13058 | 12797 | 12733 | 12682 | 12568 | 0.95 | 0.95 | 0.96 | 0.96 | 0.96 |
| | 64.4°F(18.0°C) | 13107 | 12845 | 12781 | 12729 | 12615 | 0.92 | 0.93 | 0.93 | 0.93 | 0.93 |

**Manufacturer reserves the right to change, at any time, specifications and designs without notice and without obligations.**

# HEATING PERFORMANCE DATA (HEAT PUMP)

| AIRFLOW (CFM) | OUTDOOR DB (°F) | | | | | | | | | | |
|---|---|---|---|---|---|---|---|---|---|---|---|
| | OUTDOOR DB °F (°C) | ID DB (°F) | | | | | PI: Power Input (kW) | | | | |
| | | Indoor Conditions (DB °F (°C) | | | | | Indoor Conditions (DB °F (°C) | | | | |
| | | 60.8°F (16.0°C) | 68°F (20.0°C) | 70°F (21.1°C) | 71.6°F (22.0°C) | 75.2°F (24.0°C) | 60.8°F (16.0°C) | 68°F (20.0°C) | 70°F (21.1°C) | 71.6°F (22.0°C) | 75.2°F (24.0°C) |
| 12k | | | | | | | | | | | |
| 176 | 5°F(-15.0°C) | 6495 | 6365 | 6333 | 4765 | 4722 | 0.88 | 0.89 | 0.89 | 0.89 | 0.90 |
| | 14°F(-10.0°C) | 7458 | 7309 | 7272 | 5472 | 5423 | 0.95 | 0.96 | 0.96 | 0.96 | 0.96 |
| | 17°F(-8.3°C) | 7779 | 7623 | 7585 | 5708 | 5656 | 0.97 | 0.98 | 0.98 | 0.98 | 0.98 |
| | 22°F(-5.6°C) | 8008 | 7848 | 7808 | 5876 | 5823 | 0.98 | 0.98 | 0.99 | 0.99 | 0.99 |
| | 27°F(-2.8°C) | 8237 | 8072 | 8032 | 6044 | 5990 | 0.98 | 0.99 | 0.99 | 0.99 | 1.00 |
| | 32°F(-0.0°C) | 8466 | 8297 | 8255 | 6212 | 6156 | 0.99 | 1.00 | 1.00 | 1.00 | 1.00 |
| | 35°F(1.7°C) | 8604 | 8432 | 8390 | 6313 | 6256 | 0.99 | 1.00 | 1.00 | 1.00 | 1.01 |
| | 37°F(2.8°C) | 9110 | 8928 | 8884 | 6685 | 6625 | 1.01 | 1.02 | 1.02 | 1.02 | 1.03 |
| | 42°F(5.6°C) | 10377 | 10170 | 10119 | 7614 | 7546 | 1.06 | 1.07 | 1.07 | 1.07 | 1.08 |
| | 44.6°F(7.0°C) | 10884 | 10666 | 10613 | 7986 | 7914 | 1.08 | 1.09 | 1.09 | 1.09 | 1.10 |
| | 47°F(8.3°C) | 11644 | 11411 | 11354 | 8544 | 8467 | 1.11 | 1.12 | 1.12 | 1.12 | 1.13 |
| | 52°F(11.1°C) | 11756 | 11521 | 11463 | 8626 | 8548 | 1.05 | 1.06 | 1.06 | 1.06 | 1.06 |
| | 57°F(13.9°C) | 11868 | 11631 | 11573 | 8708 | 8630 | 0.98 | 0.99 | 0.99 | 0.99 | 1.00 |
| | 59°F(15.0°C) | 11913 | 11675 | 11616 | 8741 | 8663 | 0.96 | 0.96 | 0.97 | 0.97 | 0.97 |
| | 62°F(16.7°C) | 11980 | 11741 | 11682 | 8791 | 8711 | 0.92 | 0.93 | 0.93 | 0.93 | 0.93 |
| | 64.4°F(18.0°C) | 12025 | 11785 | 11726 | 8824 | 8744 | 0.89 | 0.90 | 0.90 | 0.90 | 0.91 |
| 241 | 5°F(-15.0°C) | 6684 | 6550 | 6517 | 5642 | 5591 | 0.89 | 0.90 | 0.90 | 0.90 | 0.91 |
| | 14°F(-10.0°C) | 7675 | 7521 | 7484 | 6479 | 6421 | 0.96 | 0.97 | 0.97 | 0.97 | 0.97 |
| | 17°F(-8.3°C) | 8005 | 7845 | 7806 | 6758 | 6697 | 0.98 | 0.99 | 0.99 | 0.99 | 0.99 |
| | 22°F(-5.6°C) | 8241 | 8076 | 8036 | 6957 | 6894 | 0.99 | 0.99 | 1.00 | 1.00 | 1.00 |
| | 27°F(-2.8°C) | 8477 | 8307 | 8266 | 7156 | 7092 | 0.99 | 1.00 | 1.00 | 1.00 | 1.01 |
| | 32°F(-0.0°C) | 8713 | 8539 | 8496 | 7355 | 7289 | 1.00 | 1.01 | 1.01 | 1.01 | 1.01 |
| | 35°F(1.7°C) | 8854 | 8677 | 8634 | 7475 | 7407 | 1.00 | 1.01 | 1.01 | 1.01 | 1.02 |
| | 37°F(2.8°C) | 9376 | 9188 | 9142 | 7915 | 7844 | 1.02 | 1.03 | 1.03 | 1.03 | 1.04 |
| | 42°F(5.6°C) | 10679 | 10466 | 10414 | 9015 | 8934 | 1.07 | 1.08 | 1.08 | 1.09 | 1.09 |
| | 44.6°F(7.0°C) | 11201 | 10977 | 10922 | 9455 | 9370 | 1.09 | 1.10 | 1.10 | 1.11 | 1.11 |
| | 47°F(8.3°C) | 11983 | 11743 | 11685 | 10116 | 10025 | 1.12 | 1.13 | 1.13 | 1.14 | 1.14 |
| | 52°F(11.1°C) | 12099 | 11857 | 11797 | 10213 | 10121 | 1.06 | 1.07 | 1.07 | 1.07 | 1.07 |
| | 57°F(13.9°C) | 12214 | 11970 | 11910 | 10311 | 10218 | 0.99 | 1.00 | 1.00 | 1.00 | 1.01 |
| | 59°F(15.0°C) | 12260 | 12015 | 11955 | 10350 | 10256 | 0.97 | 0.97 | 0.98 | 0.98 | 0.98 |
| | 62°F(16.7°C) | 12329 | 12083 | 12022 | 10408 | 10314 | 0.93 | 0.93 | 0.94 | 0.94 | 0.94 |
| | 64.4°F(18.0°C) | 12375 | 12128 | 12067 | 10447 | 10353 | 0.90 | 0.91 | 0.91 | 0.91 | 0.92 |
| 294 | 5°F(-15.0°C) | 6878 | 6741 | 6707 | 6680 | 6620 | 0.90 | 0.91 | 0.91 | 0.91 | 0.92 |
| | 14°F(-10.0°C) | 7898 | 7740 | 7702 | 7671 | 7602 | 0.97 | 0.97 | 0.98 | 0.98 | 0.98 |
| | 17°F(-8.3°C) | 8238 | 8074 | 8033 | 8001 | 7929 | 0.99 | 1.00 | 1.00 | 1.00 | 1.00 |
| | 22°F(-5.6°C) | 8481 | 8312 | 8270 | 8237 | 8163 | 1.00 | 1.00 | 1.01 | 1.01 | 1.01 |
| | 27°F(-2.8°C) | 8724 | 8549 | 8507 | 8473 | 8396 | 1.00 | 1.01 | 1.01 | 1.01 | 1.02 |
| | 32°F(-0.0°C) | 8967 | 8787 | 8743 | 8708 | 8630 | 1.01 | 1.02 | 1.02 | 1.02 | 1.02 |
| | 35°F(1.7°C) | 9112 | 8930 | 8885 | 8850 | 8770 | 1.01 | 1.02 | 1.02 | 1.02 | 1.03 |
| | 37°F(2.8°C) | 9649 | 9456 | 9409 | 9371 | 9287 | 1.03 | 1.04 | 1.04 | 1.04 | 1.05 |
| | 42°F(5.6°C) | 10991 | 10771 | 10717 | 10674 | 10578 | 1.08 | 1.09 | 1.09 | 1.10 | 1.10 |
| | 44.6°F(7.0°C) | 11527 | 11297 | 11240 | 11195 | 11094 | 1.10 | 1.11 | 1.11 | 1.12 | 1.12 |
| | 47°F(8.3°C) | 12332 | 12086 | 12025 | 11977 | 11869 | 1.13 | 1.14 | 1.15 | 1.15 | 1.15 |
| | 52°F(11.1°C) | 12451 | 12202 | 12141 | 12092 | 11983 | 1.07 | 1.08 | 1.08 | 1.08 | 1.09 |
| | 57°F(13.9°C) | 12570 | 12318 | 12257 | 12208 | 12098 | 1.00 | 1.01 | 1.01 | 1.01 | 1.02 |
| | 59°F(15.0°C) | 12617 | 12365 | 12303 | 12254 | 12144 | 0.98 | 0.98 | 0.99 | 0.99 | 0.99 |
| | 62°F(16.7°C) | 12688 | 12435 | 12372 | 12323 | 12212 | 0.94 | 0.94 | 0.95 | 0.95 | 0.95 |
| | 64.4°F(18.0°C) | 12736 | 12481 | 12419 | 12369 | 12258 | 0.91 | 0.92 | 0.92 | 0.92 | 0.92 |

**Manufacturer reserves the right to change, at any time, specifications and designs without notice and without obligations.**

# HEATING PERFORMANCE DATA (HEAT PUMP)

| AIRFLOW (CFM) | OUTDOOR DB (°F) | | | | | | | | | | |
|---|---|---|---|---|---|---|---|---|---|---|---|
| | OUTDOOR DB °F (°C) | ID DB (°F) | | | | | PI: Power Input (kW) | | | | |
| | | Indoor Conditions (DB °F (°C) | | | | | Indoor Conditions (DB °F (°C) | | | | |
| | | 60.8°F (16.0°C) | 68°F (20.0°C) | 70°F (21.1°C) | 71.6°F (22.0°C) | 75.2°F (24.0°C) | 60.8°F (16.0°C) | 68°F (20.0°C) | 70°F (21.1°C) | 71.6°F (22.0°C) | 75.2°F (24.0°C) |
| 312 | 5°F(-15.0°C) | 7079 | 6937 | 6902 | 6875 | 6813 | 0.91 | 0.92 | 0.92 | 0.92 | 0.93 |
| | 14°F(-10.0°C) | 8128 | 7966 | 7926 | 7894 | 7823 | 0.98 | 0.98 | 0.99 | 0.99 | 0.99 |
| | 17°F(-8.3°C) | 8478 | 8309 | 8267 | 8234 | 8160 | 1.00 | 1.01 | 1.01 | 1.01 | 1.02 |
| | 22°F(-5.6°C) | 8728 | 8554 | 8511 | 8477 | 8401 | 1.01 | 1.01 | 1.02 | 1.02 | 1.02 |
| | 27°F(-2.8°C) | 8978 | 8798 | 8754 | 8719 | 8641 | 1.01 | 1.02 | 1.02 | 1.02 | 1.03 |
| | 32°F(-0.0°C) | 9228 | 9043 | 8998 | 8962 | 8881 | 1.02 | 1.03 | 1.03 | 1.03 | 1.03 |
| | 35°F(1.7°C) | 9378 | 9190 | 9144 | 9108 | 9026 | 1.02 | 1.03 | 1.03 | 1.03 | 1.04 |
| | 37°F(2.8°C) | 9930 | 9731 | 9683 | 9644 | 9557 | 1.04 | 1.05 | 1.05 | 1.05 | 1.06 |
| | 42°F(5.6°C) | 11311 | 11084 | 11029 | 10985 | 10886 | 1.09 | 1.10 | 1.10 | 1.11 | 1.11 |
| | 44.6°F(7.0°C) | 11863 | 11626 | 11568 | 11521 | 11418 | 1.11 | 1.12 | 1.13 | 1.13 | 1.13 |
| | 47°F(8.3°C) | 12691 | 12438 | 12375 | 12326 | 12215 | 1.15 | 1.15 | 1.16 | 1.16 | 1.16 |
| | 52°F(11.1°C) | 12814 | 12557 | 12495 | 12445 | 12333 | 1.08 | 1.09 | 1.09 | 1.09 | 1.10 |
| | 57°F(13.9°C) | 12936 | 12677 | 12614 | 12563 | 12450 | 1.01 | 1.02 | 1.02 | 1.02 | 1.03 |
| | 59°F(15.0°C) | 12985 | 12725 | 12661 | 12611 | 12497 | 0.99 | 0.99 | 1.00 | 1.00 | 1.00 |
| | 62°F(16.7°C) | 13058 | 12797 | 12733 | 12682 | 12568 | 0.95 | 0.95 | 0.96 | 0.96 | 0.96 |
| | 64.4°F(18.0°C) | 13107 | 12845 | 12781 | 12729 | 12615 | 0.92 | 0.93 | 0.93 | 0.93 | 0.93 |
| 18k | | | | | | | | | | | |
| 265 | 5°F(-15.0°C) | 11049 | 10828 | 10774 | 7282 | 7216 | 1.55 | 1.56 | 1.56 | 1.57 | 1.57 |
| | 14°F(-10.0°C) | 11413 | 11185 | 11129 | 7521 | 7454 | 1.45 | 1.46 | 1.47 | 1.47 | 1.48 |
| | 17°F(-8.3°C) | 11534 | 11303 | 11247 | 7601 | 7533 | 1.42 | 1.43 | 1.44 | 1.44 | 1.44 |
| | 22°F(-5.6°C) | 11903 | 11665 | 11607 | 7845 | 7774 | 1.45 | 1.46 | 1.46 | 1.46 | 1.47 |
| | 27°F(-2.8°C) | 12273 | 12027 | 11967 | 8088 | 8015 | 1.47 | 1.48 | 1.48 | 1.49 | 1.49 |
| | 32°F(-0.0°C) | 12642 | 12389 | 12327 | 8332 | 8257 | 1.49 | 1.51 | 1.51 | 1.51 | 1.52 |
| | 35°F(1.7°C) | 12864 | 12607 | 12544 | 8478 | 8401 | 1.51 | 1.52 | 1.52 | 1.53 | 1.53 |
| | 37°F(2.8°C) | 13982 | 13702 | 13634 | 9215 | 9132 | 1.56 | 1.57 | 1.58 | 1.58 | 1.59 |
| | 42°F(5.6°C) | 16778 | 16442 | 16360 | 11057 | 10958 | 1.69 | 1.70 | 1.71 | 1.71 | 1.72 |
| | 44.6°F(7.0°C) | 17896 | 17538 | 17450 | 11794 | 11688 | 1.74 | 1.76 | 1.76 | 1.76 | 1.77 |
| | 47°F(8.3°C) | 19573 | 19182 | 19086 | 12899 | 12783 | 1.82 | 1.83 | 1.84 | 1.84 | 1.85 |
| | 52°F(11.1°C) | 19422 | 19034 | 18939 | 12800 | 12685 | 1.67 | 1.68 | 1.69 | 1.69 | 1.70 |
| | 57°F(13.9°C) | 19271 | 18885 | 18791 | 12700 | 12586 | 1.52 | 1.53 | 1.54 | 1.54 | 1.55 |
| | 59°F(15.0°C) | 19210 | 18826 | 18732 | 12660 | 12546 | 1.46 | 1.47 | 1.48 | 1.48 | 1.49 |
| | 62°F(16.7°C) | 19120 | 18737 | 18644 | 12600 | 12487 | 1.37 | 1.38 | 1.39 | 1.39 | 1.40 |
| | 64.4°F(18.0°C) | 19059 | 18678 | 18585 | 12560 | 12447 | 1.31 | 1.33 | 1.33 | 1.33 | 1.34 |
| 359 | 5°F(-15.0°C) | 11010 | 10790 | 10736 | 8808 | 8729 | 1.56 | 1.57 | 1.58 | 1.58 | 1.59 |
| | 14°F(-10.0°C) | 11372 | 11145 | 11089 | 9098 | 9016 | 1.47 | 1.48 | 1.48 | 1.48 | 1.49 |
| | 17°F(-8.3°C) | 11493 | 11263 | 11207 | 9195 | 9112 | 1.44 | 1.45 | 1.45 | 1.45 | 1.46 |
| | 22°F(-5.6°C) | 11861 | 11624 | 11565 | 9489 | 9404 | 1.46 | 1.47 | 1.47 | 1.48 | 1.48 |
| | 27°F(-2.8°C) | 12229 | 11984 | 11924 | 9783 | 9695 | 1.48 | 1.50 | 1.50 | 1.50 | 1.51 |
| | 32°F(-0.0°C) | 12597 | 12345 | 12283 | 10078 | 9987 | 1.51 | 1.52 | 1.52 | 1.53 | 1.53 |
| | 35°F(1.7°C) | 12818 | 12562 | 12499 | 10255 | 10162 | 1.52 | 1.54 | 1.54 | 1.54 | 1.55 |
| | 37°F(2.8°C) | 13932 | 13653 | 13585 | 11146 | 11046 | 1.58 | 1.59 | 1.59 | 1.60 | 1.60 |
| | 42°F(5.6°C) | 16718 | 16383 | 16302 | 13375 | 13254 | 1.71 | 1.72 | 1.72 | 1.73 | 1.73 |
| | 44.6°F(7.0°C) | 17832 | 17475 | 17388 | 14266 | 14138 | 1.76 | 1.77 | 1.78 | 1.78 | 1.79 |
| | 47°F(8.3°C) | 19503 | 19113 | 19018 | 15603 | 15463 | 1.84 | 1.85 | 1.86 | 1.86 | 1.87 |
| | 52°F(11.1°C) | 19353 | 18966 | 18871 | 15483 | 15343 | 1.69 | 1.70 | 1.70 | 1.71 | 1.71 |
| | 57°F(13.9°C) | 19202 | 18818 | 18724 | 15362 | 15224 | 1.54 | 1.55 | 1.55 | 1.56 | 1.56 |
| | 59°F(15.0°C) | 19142 | 18759 | 18665 | 15314 | 15176 | 1.48 | 1.49 | 1.49 | 1.50 | 1.50 |
| | 62°F(16.7°C) | 19051 | 18670 | 18577 | 15242 | 15104 | 1.39 | 1.40 | 1.40 | 1.40 | 1.41 |
| | 64.4°F(18.0°C) | 18991 | 18611 | 18518 | 15193 | 15057 | 1.33 | 1.34 | 1.34 | 1.34 | 1.35 |

**Manufacturer reserves the right to change, at any time, specifications and designs without notice and without obligations.**

# HEATING PERFORMANCE DATA (HEAT PUMP)

| AIRFLOW (CFM) | OUTDOOR DB (°F) | | | | | | | | | | |
|---|---|---|---|---|---|---|---|---|---|---|---|
| | OUTDOOR DB °F (°C) | ID DB (°F) | | | | | PI: Power Input (kW) | | | | |
| | | Indoor Conditions (DB °F (°C) | | | | | Indoor Conditions (DB °F (°C) | | | | |
| | | 60.8°F (16.0°C) | 68°F (20.0°C) | 70°F (21.1°C) | 71.6°F (22.0°C) | 75.2°F (24.0°C) | 60.8°F (16.0°C) | 68°F (20.0°C) | 70°F (21.1°C) | 71.6°F (22.0°C) | 75.2°F (24.0°C) |
| 447 | 5°F(-15.0°C) | 10971 | 10751 | 10697 | 10655 | 10559 | 1.58 | 1.59 | 1.59 | 1.60 | 1.60 |
| | 14°F(-10.0°C) | 11331 | 11105 | 11049 | 11005 | 10906 | 1.48 | 1.49 | 1.50 | 1.50 | 1.51 |
| | 17°F(-8.3°C) | 11452 | 11223 | 11166 | 11122 | 11022 | 1.45 | 1.46 | 1.46 | 1.47 | 1.47 |
| | 22°F(-5.6°C) | 11818 | 11582 | 11524 | 11478 | 11375 | 1.47 | 1.49 | 1.49 | 1.49 | 1.50 |
| | 27°F(-2.8°C) | 12185 | 11941 | 11882 | 11834 | 11728 | 1.50 | 1.51 | 1.51 | 1.52 | 1.52 |
| | 32°F(-0.0°C) | 12552 | 12301 | 12239 | 12190 | 12081 | 1.52 | 1.54 | 1.54 | 1.54 | 1.55 |
| | 35°F(1.7°C) | 12772 | 12517 | 12454 | 12404 | 12293 | 1.54 | 1.55 | 1.56 | 1.56 | 1.56 |
| | 37°F(2.8°C) | 13882 | 13605 | 13537 | 13482 | 13361 | 1.59 | 1.61 | 1.61 | 1.61 | 1.62 |
| | 42°F(5.6°C) | 16658 | 16325 | 16243 | 16178 | 16033 | 1.72 | 1.74 | 1.74 | 1.74 | 1.75 |
| | 44.6°F(7.0°C) | 17768 | 17413 | 17326 | 17257 | 17101 | 1.78 | 1.79 | 1.79 | 1.80 | 1.81 |
| | 47°F(8.3°C) | 19434 | 19045 | 18950 | 18874 | 18704 | 1.86 | 1.87 | 1.87 | 1.88 | 1.89 |
| | 52°F(11.1°C) | 19283 | 18898 | 18803 | 18728 | 18560 | 1.70 | 1.72 | 1.72 | 1.72 | 1.73 |
| | 57°F(13.9°C) | 19133 | 18751 | 18657 | 18582 | 18415 | 1.55 | 1.57 | 1.57 | 1.57 | 1.58 |
| | 59°F(15.0°C) | 19073 | 18692 | 18598 | 18524 | 18357 | 1.49 | 1.50 | 1.51 | 1.51 | 1.52 |
| | 62°F(16.7°C) | 18983 | 18603 | 18510 | 18436 | 18270 | 1.40 | 1.41 | 1.42 | 1.42 | 1.42 |
| | 64.4°F(18.0°C) | 18923 | 18545 | 18452 | 18378 | 18213 | 1.34 | 1.35 | 1.35 | 1.36 | 1.36 |
| 459 | 5°F(-15.0°C) | 10931 | 10713 | 10659 | 10616 | 10521 | 1.59 | 1.61 | 1.61 | 1.61 | 1.62 |
| | 14°F(-10.0°C) | 11291 | 11065 | 11010 | 10966 | 10867 | 1.50 | 1.51 | 1.51 | 1.51 | 1.52 |
| | 17°F(-8.3°C) | 11411 | 11182 | 11127 | 11082 | 10982 | 1.46 | 1.48 | 1.48 | 1.48 | 1.49 |
| | 22°F(-5.6°C) | 11776 | 11541 | 11483 | 11437 | 11334 | 1.49 | 1.50 | 1.50 | 1.51 | 1.51 |
| | 27°F(-2.8°C) | 12142 | 11899 | 11839 | 11792 | 11686 | 1.51 | 1.53 | 1.53 | 1.53 | 1.54 |
| | 32°F(-0.0°C) | 12507 | 12257 | 12196 | 12147 | 12038 | 1.54 | 1.55 | 1.56 | 1.56 | 1.57 |
| | 35°F(1.7°C) | 12726 | 12472 | 12409 | 12360 | 12249 | 1.56 | 1.57 | 1.57 | 1.57 | 1.58 |
| | 37°F(2.8°C) | 13833 | 13556 | 13488 | 13434 | 13313 | 1.61 | 1.62 | 1.62 | 1.63 | 1.63 |
| | 42°F(5.6°C) | 16598 | 16266 | 16185 | 16120 | 15975 | 1.74 | 1.76 | 1.76 | 1.76 | 1.77 |
| | 44.6°F(7.0°C) | 17705 | 17351 | 17264 | 17195 | 17040 | 1.79 | 1.81 | 1.81 | 1.82 | 1.82 |
| | 47°F(8.3°C) | 19364 | 18977 | 18882 | 18806 | 18637 | 1.87 | 1.89 | 1.89 | 1.90 | 1.90 |
| | 52°F(11.1°C) | 19215 | 18830 | 18736 | 18661 | 18493 | 1.72 | 1.74 | 1.74 | 1.74 | 1.75 |
| | 57°F(13.9°C) | 19065 | 18684 | 18590 | 18516 | 18349 | 1.57 | 1.58 | 1.58 | 1.59 | 1.59 |
| | 59°F(15.0°C) | 19005 | 18625 | 18532 | 18458 | 18292 | 1.51 | 1.52 | 1.52 | 1.53 | 1.53 |
| | 62°F(16.7°C) | 18915 | 18537 | 18444 | 18370 | 18205 | 1.42 | 1.43 | 1.43 | 1.43 | 1.44 |
| | 64.4°F(18.0°C) | 18855 | 18478 | 18386 | 18312 | 18147 | 1.35 | 1.37 | 1.37 | 1.37 | 1.38 |
| 24k | | | | | | | | | | | |
| 341 | 5°F(-15.0°C) | 12135 | 11892 | 11832 | 11351 | 11249 | 2.32 | 2.34 | 2.35 | 2.35 | 2.36 |
| | 14°F(-10.0°C) | 14045 | 13764 | 13695 | 13138 | 13019 | 2.42 | 2.44 | 2.45 | 2.45 | 2.46 |
| | 17°F(-8.3°C) | 14681 | 14388 | 14316 | 13733 | 13610 | 2.46 | 2.48 | 2.48 | 2.49 | 2.50 |
| | 22°F(-5.6°C) | 15695 | 15381 | 15304 | 14681 | 14549 | 2.57 | 2.59 | 2.59 | 2.60 | 2.61 |
| | 27°F(-2.8°C) | 16708 | 16374 | 16292 | 15629 | 15489 | 2.68 | 2.70 | 2.71 | 2.71 | 2.72 |
| | 32°F(-0.0°C) | 17722 | 17367 | 17280 | 16577 | 16428 | 2.79 | 2.81 | 2.82 | 2.82 | 2.83 |
| | 35°F(1.7°C) | 18330 | 17963 | 17873 | 17146 | 16992 | 2.86 | 2.88 | 2.88 | 2.89 | 2.90 |
| | 37°F(2.8°C) | 18708 | 18334 | 18242 | 17500 | 17342 | 2.86 | 2.89 | 2.89 | 2.90 | 2.91 |
| | 42°F(5.6°C) | 19654 | 19261 | 19165 | 18385 | 18220 | 2.88 | 2.90 | 2.91 | 2.91 | 2.92 |
| | 44.6°F(7.0°C) | 20033 | 19632 | 19534 | 18739 | 18570 | 2.88 | 2.91 | 2.91 | 2.92 | 2.93 |
| | 47°F(8.3°C) | 20601 | 20189 | 20088 | 19270 | 19097 | 2.89 | 2.91 | 2.92 | 2.93 | 2.94 |
| | 52°F(11.1°C) | 20623 | 20211 | 20110 | 19291 | 19118 | 2.67 | 2.69 | 2.70 | 2.70 | 2.71 |
| | 57°F(13.9°C) | 20646 | 20233 | 20132 | 19313 | 19139 | 2.45 | 2.47 | 2.47 | 2.48 | 2.49 |
| | 59°F(15.0°C) | 20655 | 20242 | 20141 | 19321 | 19147 | 2.36 | 2.38 | 2.38 | 2.39 | 2.40 |
| | 62°F(16.7°C) | 20669 | 20256 | 20154 | 19334 | 19160 | 2.23 | 2.24 | 2.25 | 2.25 | 2.26 |
| | 64.4°F(18.0°C) | 20678 | 20264 | 20163 | 19343 | 19168 | 2.14 | 2.15 | 2.16 | 2.16 | 2.17 |

**Manufacturer reserves the right to change, at any time, specifications and designs without notice and without obligations.**

# HEATING PERFORMANCE DATA (HEAT PUMP)

| AIRFLOW (CFM) | OUTDOOR DB (°F) | | | | | | | | | | |
|---|---|---|---|---|---|---|---|---|---|---|---|
| | OUTDOOR DB °F (°C) | ID DB (°F) | | | | | PI: Power Input (kW) | | | | |
| | | Indoor Conditions (DB °F (°C) | | | | | Indoor Conditions (DB °F (°C) | | | | |
| | | 60.8°F (16.0°C) | 68°F (20.0°C) | 70°F (21.1°C) | 71.6°F (22.0°C) | 75.2°F (24.0°C) | 60.8°F (16.0°C) | 68°F (20.0°C) | 70°F (21.1°C) | 71.6°F (22.0°C) | 75.2°F (24.0°C) |
| 447 | 5°F(-15.0°C) | 13388 | 13120 | 13054 | 12760 | 12646 | 2.35 | 2.37 | 2.37 | 2.38 | 2.39 |
| | 14°F(-10.0°C) | 15495 | 15185 | 15109 | 14769 | 14636 | 2.45 | 2.47 | 2.47 | 2.48 | 2.49 |
| | 17°F(-8.3°C) | 16197 | 15874 | 15794 | 15438 | 15300 | 2.48 | 2.50 | 2.51 | 2.51 | 2.52 |
| | 22°F(-5.6°C) | 17316 | 16969 | 16884 | 16504 | 16356 | 2.59 | 2.62 | 2.62 | 2.63 | 2.64 |
| | 27°F(-2.8°C) | 18434 | 18065 | 17975 | 17570 | 17412 | 2.71 | 2.73 | 2.73 | 2.74 | 2.75 |
| | 32°F(-0.0°C) | 19552 | 19161 | 19065 | 18636 | 18468 | 2.82 | 2.84 | 2.85 | 2.85 | 2.86 |
| | 35°F(1.7°C) | 20223 | 19818 | 19719 | 19275 | 19101 | 2.88 | 2.91 | 2.91 | 2.92 | 2.93 |
| | 37°F(2.8°C) | 20640 | 20227 | 20126 | 19673 | 19496 | 2.89 | 2.91 | 2.92 | 2.93 | 2.94 |
| | 42°F(5.6°C) | 21684 | 21250 | 21144 | 20668 | 20482 | 2.91 | 2.93 | 2.93 | 2.94 | 2.95 |
| | 44.6°F(7.0°C) | 22102 | 21660 | 21551 | 21066 | 20876 | 2.91 | 2.93 | 2.94 | 2.95 | 2.96 |
| | 47°F(8.3°C) | 22728 | 22273 | 22162 | 21663 | 21468 | 2.92 | 2.94 | 2.95 | 2.96 | 2.97 |
| | 52°F(11.1°C) | 22753 | 22298 | 22187 | 21687 | 21492 | 2.70 | 2.72 | 2.72 | 2.73 | 2.74 |
| | 57°F(13.9°C) | 22778 | 22323 | 22211 | 21711 | 21515 | 2.47 | 2.49 | 2.50 | 2.50 | 2.51 |
| | 59°F(15.0°C) | 22788 | 22332 | 22221 | 21720 | 21525 | 2.38 | 2.40 | 2.41 | 2.41 | 2.42 |
| | 62°F(16.7°C) | 22803 | 22347 | 22236 | 21735 | 21539 | 2.25 | 2.27 | 2.27 | 2.28 | 2.28 |
| | 64.4°F(18.0°C) | 22813 | 22357 | 22245 | 21744 | 21549 | 2.16 | 2.18 | 2.18 | 2.18 | 2.19 |
| 518 | 5°F(-15.0°C) | 14770 | 14475 | 14402 | 14345 | 14216 | 2.37 | 2.39 | 2.39 | 2.40 | 2.41 |
| | 14°F(-10.0°C) | 17095 | 16753 | 16669 | 16603 | 16453 | 2.47 | 2.49 | 2.50 | 2.50 | 2.51 |
| | 17°F(-8.3°C) | 17870 | 17513 | 17425 | 17355 | 17199 | 2.51 | 2.53 | 2.53 | 2.54 | 2.55 |
| | 22°F(-5.6°C) | 19104 | 18722 | 18628 | 18553 | 18387 | 2.62 | 2.64 | 2.65 | 2.65 | 2.66 |
| | 27°F(-2.8°C) | 20337 | 19930 | 19831 | 19751 | 19574 | 2.73 | 2.76 | 2.76 | 2.77 | 2.78 |
| | 32°F(-0.0°C) | 21571 | 21139 | 21034 | 20950 | 20761 | 2.85 | 2.87 | 2.88 | 2.88 | 2.89 |
| | 35°F(1.7°C) | 22311 | 21865 | 21755 | 21668 | 21473 | 2.91 | 2.94 | 2.94 | 2.95 | 2.96 |
| | 37°F(2.8°C) | 22772 | 22316 | 22205 | 22116 | 21917 | 2.92 | 2.94 | 2.95 | 2.96 | 2.97 |
| | 42°F(5.6°C) | 23923 | 23445 | 23328 | 23234 | 23025 | 2.93 | 2.96 | 2.96 | 2.97 | 2.98 |
| | 44.6°F(7.0°C) | 24384 | 23896 | 23777 | 23682 | 23469 | 2.94 | 2.96 | 2.97 | 2.98 | 2.99 |
| | 47°F(8.3°C) | 25075 | 24573 | 24451 | 24353 | 24134 | 2.95 | 2.97 | 2.98 | 2.99 | 3.00 |
| | 52°F(11.1°C) | 25103 | 24601 | 24478 | 24380 | 24160 | 2.72 | 2.75 | 2.75 | 2.76 | 2.77 |
| | 57°F(13.9°C) | 25130 | 24628 | 24505 | 24407 | 24187 | 2.50 | 2.52 | 2.52 | 2.53 | 2.54 |
| | 59°F(15.0°C) | 25141 | 24639 | 24515 | 24417 | 24198 | 2.41 | 2.43 | 2.43 | 2.44 | 2.45 |
| | 62°F(16.7°C) | 25158 | 24655 | 24532 | 24434 | 24214 | 2.27 | 2.29 | 2.29 | 2.30 | 2.31 |
| | 64.4°F(18.0°C) | 25169 | 24666 | 24542 | 24444 | 24224 | 2.18 | 2.20 | 2.20 | 2.21 | 2.22 |
| 588 | 5°F(-15.0°C) | 16295 | 15970 | 15890 | 15826 | 15684 | 2.39 | 2.41 | 2.42 | 2.42 | 2.43 |
| | 14°F(-10.0°C) | 18860 | 18483 | 18391 | 18317 | 18152 | 2.50 | 2.52 | 2.52 | 2.53 | 2.54 |
| | 17°F(-8.3°C) | 19716 | 19321 | 19225 | 19148 | 18975 | 2.53 | 2.55 | 2.56 | 2.56 | 2.57 |
| | 22°F(-5.6°C) | 21076 | 20655 | 20552 | 20469 | 20285 | 2.65 | 2.67 | 2.67 | 2.68 | 2.69 |
| | 27°F(-2.8°C) | 22437 | 21989 | 21879 | 21791 | 21595 | 2.76 | 2.78 | 2.79 | 2.79 | 2.81 |
| | 32°F(-0.0°C) | 23798 | 23322 | 23206 | 23113 | 22905 | 2.88 | 2.90 | 2.90 | 2.91 | 2.92 |
| | 35°F(1.7°C) | 24615 | 24123 | 24002 | 23906 | 23691 | 2.94 | 2.97 | 2.97 | 2.98 | 2.99 |
| | 37°F(2.8°C) | 25123 | 24621 | 24498 | 24400 | 24180 | 2.95 | 2.97 | 2.98 | 2.99 | 3.00 |
| | 42°F(5.6°C) | 26394 | 25866 | 25737 | 25634 | 25403 | 2.96 | 2.99 | 2.99 | 3.00 | 3.01 |
| | 44.6°F(7.0°C) | 26902 | 26364 | 26232 | 26127 | 25892 | 2.97 | 2.99 | 3.00 | 3.01 | 3.02 |
| | 47°F(8.3°C) | 27664 | 27111 | 26976 | 26868 | 26626 | 2.98 | 3.00 | 3.01 | 3.02 | 3.03 |
| | 52°F(11.1°C) | 27695 | 27141 | 27005 | 26897 | 26655 | 2.75 | 2.77 | 2.78 | 2.78 | 2.80 |
| | 57°F(13.9°C) | 27726 | 27171 | 27035 | 26927 | 26685 | 2.52 | 2.54 | 2.55 | 2.55 | 2.56 |
| | 59°F(15.0°C) | 27738 | 27183 | 27047 | 26939 | 26696 | 2.43 | 2.45 | 2.46 | 2.46 | 2.47 |
| | 62°F(16.7°C) | 27756 | 27201 | 27065 | 26957 | 26714 | 2.29 | 2.31 | 2.32 | 2.32 | 2.33 |
| | 64.4°F(18.0°C) | 27768 | 27213 | 27077 | 26969 | 26726 | 2.20 | 2.22 | 2.22 | 2.23 | 2.24 |

## WIRING

All wires must be sized per NEC (National Electrical Code) or CEC (Canadian Electrical Code) and local codes. Use Electrical Data table MCA (minimum circuit amps) and MOCP (maximum over current protection) to correctly size the wires and the disconnect fuse or breakers respectively.

**Recommended Connection Method for Power and Communication Wiring:**

The main power is supplied to the outdoor unit. The field supplied 14/3 stranded wire with ground with a 600 volt insulation rating, power/communication wiring from the outdoor unit to indoor unit consists of four (4) wires and provides the power for the indoor unit.

Two wires are line voltage AC power, one is communication wiring (S) and the other is a ground wire. Wiring between indoor and outdoor unit is polarity sensitive. The use of BX wire is NOT recommended.

If installed in a high Electromagnetic field (EMF) area and communication issues exists, a 14/2 stranded shielded wire can be used to replace L2/N and (S) between outdoor unit and indoor unit landing the shield onto ground in the outdoor unit only.

**⚠ CAUTION**

**EQUIPMENT DAMAGE HAZARD**

Failure to follow this caution may result in equipment damage or improper operation.

Wires should be sized based on NEC and local codes.

**⚠ CAUTION**

**EQUIPMENT DAMAGE HAZARD**

Failure to follow this caution may result in equipment damage or improper operation.

Be sure to comply with local codes while running wire from the indoor unit to the outdoor unit.

Every wire must be connected firmly. Loose wiring may cause the terminal to overheat or result in unit malfunction. A fire hazard may also exist. Ensure all wiring is tightly connected.

No wire should touch the refrigerant tubing, compressor or any moving parts.

Disconnecting means must be provided and shall be located within sight and readily accessible from the air conditioner.

Connecting cable with conduit shall be routed through the hole in the conduit panel.

## WIRING DIAGRAMS

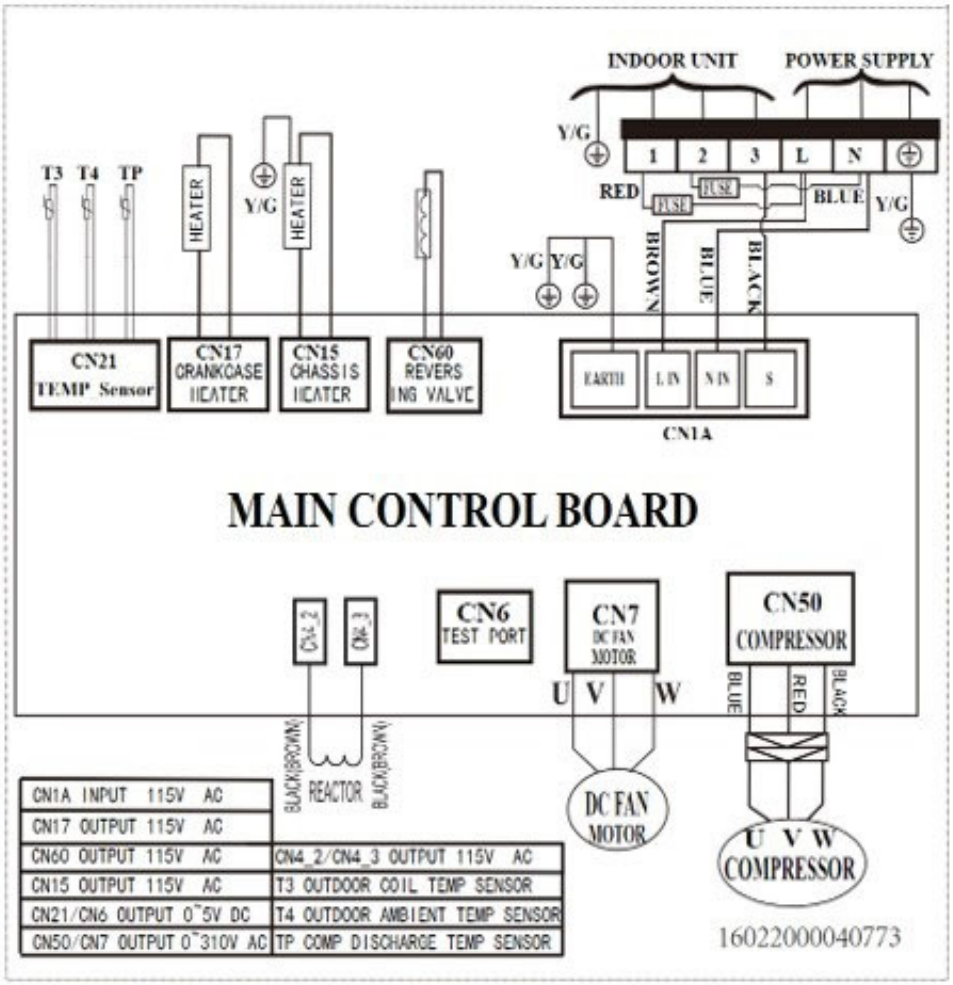


**Fig. 5 – 9K - 12K 115V**

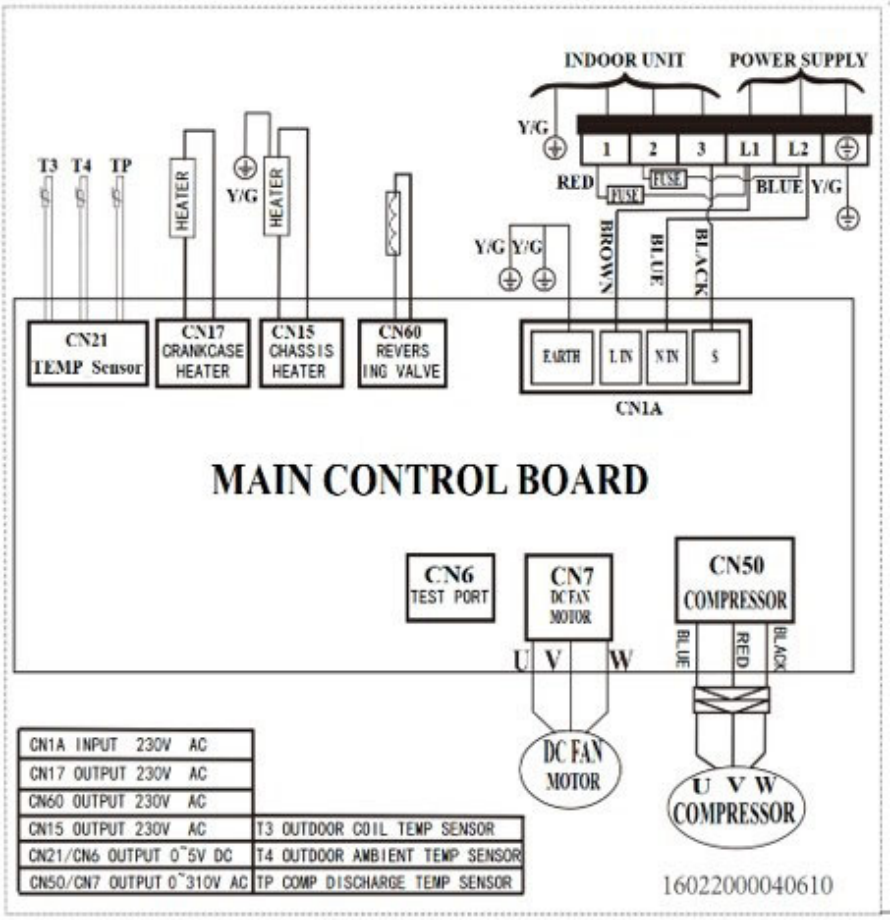


**Fig. 6 – 9K - 12K - 18K**

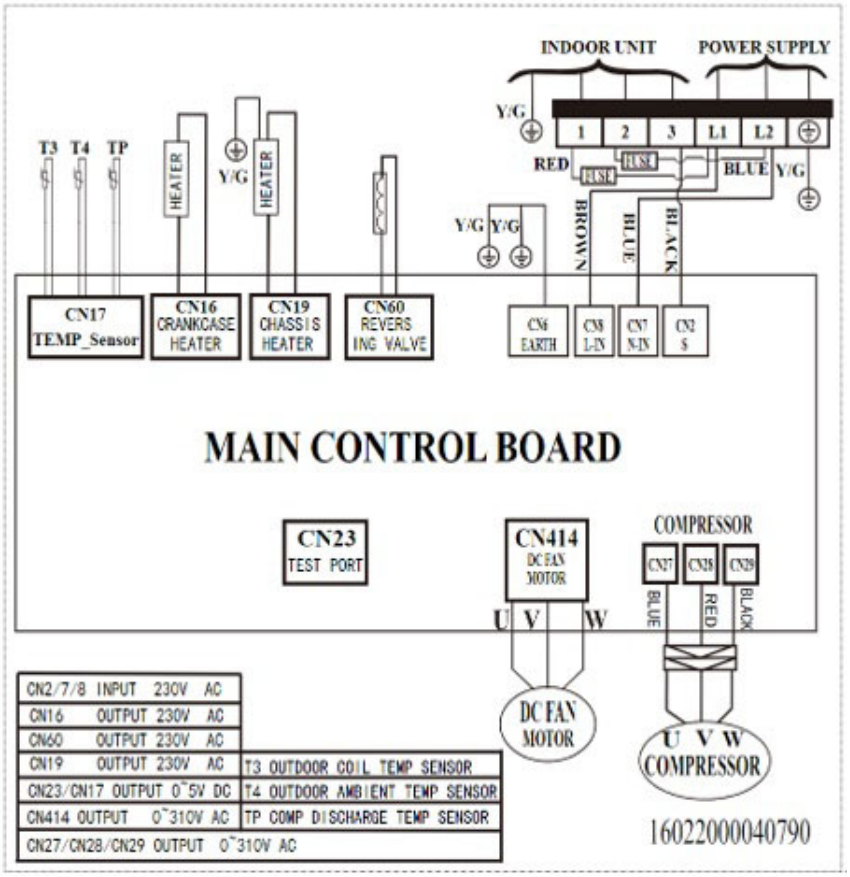


**Fig. 7 – 24K**

# GUIDE SPECIFICATIONS
## HORIZONTAL DISCHARGE OUTDOOR UNITS

Size Range: 3/4 to 2 Ton Nominal Cooling and Heating Capacity

Model Number: **D5CVRA**

## Part 1 - GENERAL

### 1.01 System Description

1. Outdoor air-cooled split system compressor sections suitable for on-the-ground, rooftop, wall hung or balcony mounting. Units consist of a rotary compressor, an air-cooled coil, propeller-type draw-through outdoor fan, reversing valve (HP), accumulator (HP units), metering device(s), and a control box. Units discharge air horizontally as shown on the contract drawings. Units function as the outdoor component of an air-to-air heat pump system.
2. Units are to be used in a refrigeration circuit matched to ductless heat pump fan coil units.

### 1.02 Agency Listings

1. Unit construction complies with ANSI/ASHRAE 15, latest revision, and with the NEC.
2. Units are evaluated in accordance with UL standard 60335-2-40.
3. Units are listed in the CEC directory.
4. Unit cabinet is capable of withstanding 500-hour salt spray test per Federal Test Standard No. 141 (method 6061).
5. Air-cooled condenser coils are leak tested at 550 psig.

### 1.03 Delivery, Storage, And Handling

Units are shipped in one piece and are stored and handled per unit manufacturer's recommendations.

### 1.04 Warranty (For Inclusion By Specifying Engineer)

## Part 2 - PRODUCTS

### 2.01 Equipment

A. **General:**

Factory assembled, single piece, air-cooled outdoor unit. Contained within the unit enclosure is all the factory wiring, piping, controls, and the compressor.

B. **Unit Cabinet:**

1. Unit cabinet is constructed of galvanized steel, bonderized and coated with a baked-enamel finish on the inside and outside.
2. Unit access panels is removable with minimal screws and provides full access to the compressor, fan, and control components.
3. The outdoor compartment is isolated and has an acoustic lining to assure quiet operation.

C. **Fans:**

1. Outdoor fans are the direct drive propeller type, and discharges air horizontally. Fans draw air through the outdoor coil.
2. Outdoor fan motors are totally enclosed, single phase motors with class E insulation and permanently lubricated ball bearings. Motor shall be protected by internal thermal overload protection.
3. The shaft has inherent corrosion resistance.
4. Fan blades are non-metallic and statically and dynamically balanced.
5. Outdoor fan openings are equipped with a PVC metal/mesh coated protection grille over the fan.

D. **Compressor:**

1. Compressor is the fully hermetic rotary type.
2. Compressor is equipped with an oil system, operating oil charge, and a motor.
3. Motor is NEMA rated class E, suitable for operation in a refrigerant atmosphere.
4. Compressor assembly is installed on rubber vibration isolators.

E. **Outdoor Coil:**

The coil is constructed of aluminum hydrophilic pre-coated fins mechanically bonded to seamless copper tubes, which are cleaned, dehydrated, and sealed.

F. **Refrigeration Components:**

Refrigerant circuit components include a brass external liquid line service valve with service gage port connections, a suction line service valve with a service gage connection port, service gage port connections on compressor suction and discharge lines with Schrader type fittings with brass caps, accumulator, reversing valve.

G. **Controls and Safeties:**

Operating controls and safeties are factory selected, assembled, and tested. The minimum control functions include the following:

1. Controls:
   - A time delay control sequence is provided standard through the fan coil board
   - Automatic outdoor fan motor protection.
2. Safeties:
   - System diagnostics
   - Compressor motor current and temperature overload protection
   - Outdoor fan failure protection.

H. **Electrical Requirements:**

1. Unit operates on single-phase, 60 Hz power at 115V for unit size 09 and 12 and 208/230V for unit sizes 09, 12, 18, 24 as specified.
2. Unit electrical power has a single point connection.
3. Unit Control voltage to the indoor fan coil is 0-15V DC.
4. All power and control wiring must be installed per NEC and all local electrical codes.
5. The unit has high and low voltage terminal block connections.

© 2025 Carrier. All rights reserved.

**Manufacturer reserves the right to change, at any time, specifications and designs without notice and without obligations.**