Model DEHXXCDA1080-AO4 & DEHXXCDA1100-AO4 Dehumidifier Installation Instructions

TABLE OF CONTENTS

Safety Considerations . . . 2

Specifications . . . 3

Set Up Dehumidifier for Installation . . . 3
- Packaging Content . . . 3
- Duct Collars . . . 4
- Control Location . . . 5

Location Considerations . . . 6
- Suspended Installation . . . 6

Drain Installation . . . 7
- Leveling . . . 8
- Condensate Pan, Condensate Pump and Float Switch . . . 8

Ducting to HVAC System – Basement and Attic Installations . . . 9

Ducting to HVAC System – Closet Installations . . . 10

Ducting for Stand Alone Installations or Non-Ducted Installations . . . 10

Ducting for Two Zone Installations . . . 11

Model 76C – External Control or Crawl Space/Sealed Attic Control and Wiring . . . 12

Wiring the Dehumidifier to the HVAC System and Zone Dampers . . . 13

System Set Up and Checkout . . . 15
- Installer Test Mode . . . 17

Start Up and Sequence of Operation . . . 18
- Single Zone Whole House or Stand Alone Using the Dehumidifier Control . . . 18
- Single Zone Whole House or Stand Alone Using Model 76C External Control . . . 18
- Crawl Space or Sealed Attic (Remote) Control Using Model 76C . . . 18
- Two Zone – Primary and Secondary . . . 18

Ventilation . . . 19
- Installation and Wiring . . . 19
- Vent Auto & Vent-Timed . . . 20
- Outdoor Temperature Sensor Installation . . . 20
- Determine Ventilation Requirements . . . 21
- Installer Settings . . . 22
- Sequence of Operation . . . 23

Troubleshooting . . . 24
- Table 4 – Diagnostic Codes . . . 24
- Table 5 – Troubleshooting Guide . . . 26

Service Parts . . . 27

READ AND SAVE THESE INSTRUCTIONS

SAFETY CONSIDERATIONS

Improper installation, adjustment, alteration, service, maintenance, or use can cause explosion, fire, electrical shock, or other conditions which may cause death, personal injury or property damage. Consult a qualified installer, service agency, or your distributor or branch for information or assistance. The qualified installer or agency must use factory-authorized kits or accessories when modifying this product. Refer to the individual instructions packaged with kits or accessories when installing.

Follow all safety codes. Wear safety glasses, protective clothing and work gloves. Have a fire extinguisher available. Read these instructions thoroughly and follow all warnings or cautions included in literature and attached to the unit. Consult local building codes and the current editions of the National Electrical Code (NEC) NFPA 70.

Recognize safety information. This is the safety-alert symbol ⚠. When you see this symbol on the unit and in instructions manuals, be alert to the potential for personal injury.

Understand the signal words **DANGER**, **WARNING**, and **CAUTION**. These words are used with the safety-alert symbol. **DANGER** identifies the most serious hazards which will result in severe personal injury or death. **WARNING** signifies hazards which could result in personal injury or death. **CAUTION** is used to identify unsafe practices which may result in minor personal injury or product and property damage. **NOTE** is used to highlight suggestions which will result in enhanced installation, reliability, or operation.

⚠ WARNING

ELECTRICAL SHOCK HAZARD: Failure to follow this warning could result in personal injury or death. Disconnect electrical power to the HVAC system before proceeding.

ELECTRICAL SHOCK HAZARD: 115-volts may cause serious injury or death from electrical shock. Disconnect and tag electrical service before starting installation or field-service. Leave electrical service disconnected until installation or field-service is complete.

ELECTRICAL SHOCK HAZARD: An interrupted or broken ground may cause property damage, serious injury or death should an electrical fault occur. The cabinet must be grounded in accordance with NEC ANSI/NFPA 70-2011 or local codes. In Canada, refer to Canadian Electrical Code CSA C22.1.

FIRE HAZARD: Use of improper wire may cause serious injury, property damage or death due to fire. Do not use aluminum wire for electrical service to the dehumidifier. Use only copper wire.

⚠ CAUTION

CUT HAZARD: Failure to follow this caution may result in personal injury. Sharp metal edges can cause personal injury from cuts. Use gloves when cutting plenum openings and handling ductwork.

⚠ CAUTION

1. Read all instructions before beginning installation.
2. Improper installation may cause property damage or injury. Installation, service, and maintenance must be performed by a qualified service technician.
3. Do not use in pool applications. Pool chemicals can damage the dehumidifier.
4. Do not use solvents or cleaners on or near the circuit board. Chemicals can damage circuit board components.
5. Wait 24 hours before running the unit if it was not shipped or stored in the upright position
6. Do not use dehumidification to prevent window condensation in the winter. To address window condensation, use ventilation to lower indoor humidity in the winter.
7. Dropping may cause personal injury or equipment damage. Handle with care and follow installation instructions.
8. This appliance is not intended for use by persons (including children) with reduced physical, sensory or mental capabilities, or lack of experience and knowledge, unless they have been given supervision or instruction concerning use of the appliance by a person responsible for their safety.
9. Children should be supervised to ensure that they do not play with the appliance.
10. If the supply cord is damaged, it must be replaced by a special cord or assembly available from the manufacturer or its service agent.

SPECIFICATIONS

	Model DEHXXCDA1080-AO4		Model DEHXXCDA1100-AO4	
Unit Weight	63 lbs.		64 lbs.	
Shipping Weight	81 lbs.		82 lbs.	
Capacity 80°F, 60% RH Conditions	Up to 80 pints per day @ 185 CFM		Up to 100 pints per day @ 280 CFM	
Power 115 VAC, Single Phase, 60Hz	5.1A operating current		6.9A operating current	
Dehumidifier Inlet Air Conditions	Dehumidification: 50°F – 104°F, 40°F dew point minimum Ventilation: 40°F – 140°F, 0%RH – 99%RH (non-condensing)			
Filter	MERV 8, washable			
Airflow	**External Static Pressure ("w.c.)**	**Airflow (CFM)**	**External Static Pressure ("w.c.)**	**Airflow (CFM)**
	0.0	185	0.0	280
	0.2	135	0.2	245
	0.4*	85	0.4	210
			0.6*	175

**Maximum design external static pressure.*

SET UP DEHUMIDIFIER FOR INSTALLATION

⚠ IMPORTANT: Cut the strap securing the compressor shipping support bracket and remove the strap and shipping bracket. See **Figure 1**.

PACKAGING CONTENT

1. Dehumidifier
2. Inlet/Outlet Collars
3. Literature
   a. Installation Instructions
   b. Owner's Manual
   c. Application Quick Start Guide
4. Parts Bag
   a. Screws (9)
   b. T20 Torx Bit
5. 3/4" MNPT x 3/4" barbed fitting for drain connections

FIGURE 1 – Remove Shipping Bracket

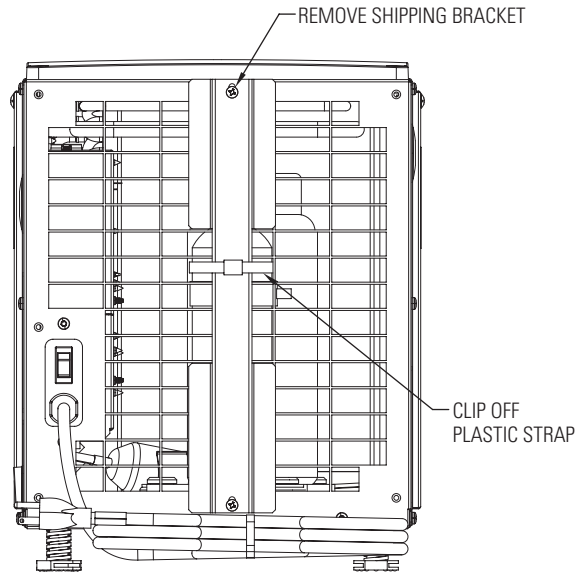

DUCT COLLARS

STANDARD BASEMENT AND ATTIC INSTALLATIONS (FULLY DUCTED)

- Use the screws in the parts bag to attach the duct collars to the inlet and outlet of the dehumidifier. The outlet collar has a backflow damper.
- The outlet duct collar may be attached to the top or end of the unit. Move the outlet cover to the location not being used. See **Figure 2**.
- Make sure there are no bends in the ductwork coming off the outlet for a minimum of 4". This will ensure that the ductwork will not interfere with the backflow damper function.

CLOSET INSTALLATIONS

⚠ WARNING

Closet installations are not approved with gas furnaces. Only install dehumidifier in a closet with electric heat or a fan coil system.

NOTE: Do not install the dehumidifier underneath the fan coil in a closet installation. Airflow can be restricted or moisture may damage the dehumidifier.

Use the screws provided in the parts bag to attach the duct collars if desired or required based on recommendations below:

- Where inlet space is restricted, the inlet duct collar is optional.
- When the dehumidifier requires a ducted vertical discharge, remove the top access panel and remount on the outlet of the unit. Install the outlet duct collar with backflow damper on top of the unit. See **Figure 3**.

CRAWL SPACE, SEALED ATTICS OR BASEMENT INSTALLATIONS

If dehumidifying the space in which the dehumidifier is installed, the duct collars do not need to be installed. Leave the outlet cover on top of the unit. See **Figure 4**.

FIGURE 2 – Fully Ducted Installations

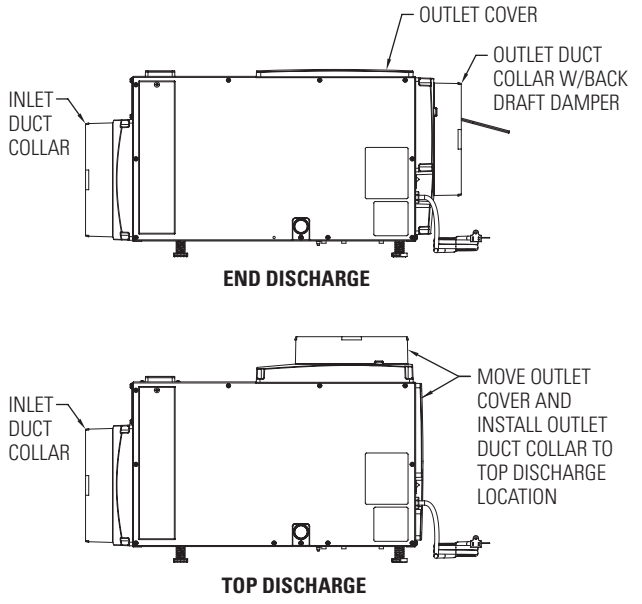

FIGURE 3 – Closet Installations with Vertical Discharge

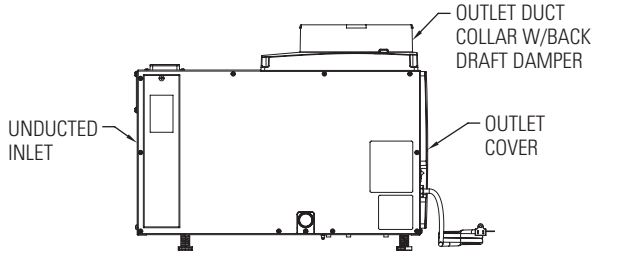

FIGURE 4 – Non-ducted Installations

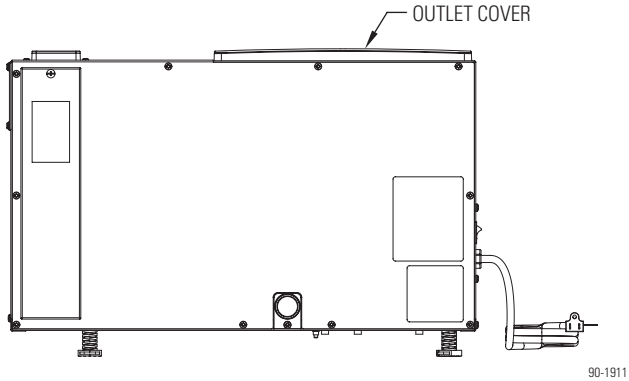

CONTROL LOCATION

The on-board control can be located on the top of the dehumidifier or can be relocated to the front of the dehumidifier if the control cannot be seen/accessed in the top orientation. It may also be rotated 180 degrees in either orientation as shown in **Figure 6**.

To move the control:

1. Remove the front control panel cover.
2. Remove the filter access door and filter.
3. Detach the on-board control by removing the four (4) screws around the control. **NOTE:** Use one hand to support the bottom of the on-board control when removing.
4. Keep the control in the unit and relocate to the front access hole.
5. Secure the control with the same four screws used to attach the control to the top of the unit.
6. Secure the control panel cover to the top of the unit.

FIGURE 5 – Control Location

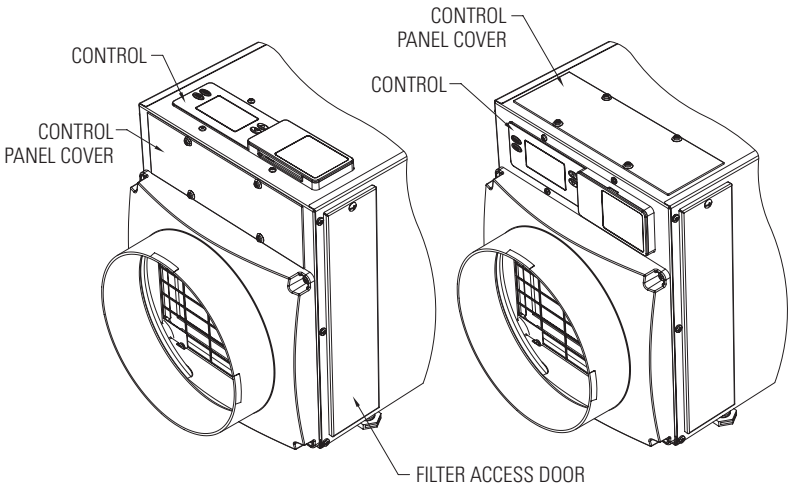

FIGURE 6 – Control Rotated 180 Degrees

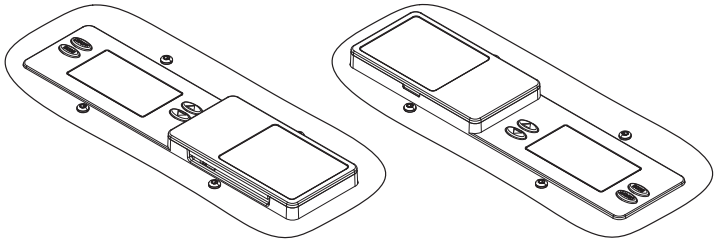

LOCATION CONSIDERATIONS

- Allow sufficient clearance for filter removal and to prevent airflow obstruction
- Electrical service access will require the removal of the side panel shown. Allow sufficient space for service on this side of the unit.
- If locating the unit in an attic or crawl space, a Model 76C Control mounted in the living space is recommended.
- For attic installations, it is recommended that the dehumidifier be suspended.
- Always install the dehumidifier in a condensate pan when locating in or over a finished space.
- Dehumidifier is supplied with an 8 ft. power cord. Do not use with an extension cord.

FIGURE 7 – Filter Access Clearance

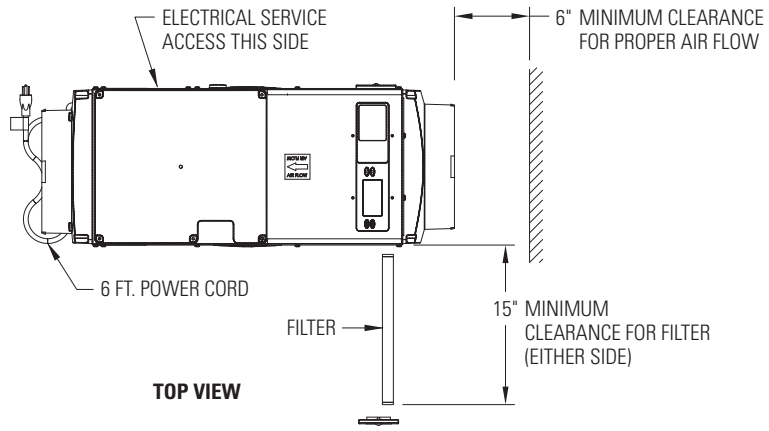

SUSPENDED INSTALLATION

If hanging the unit, use 1/4" (minimum) threaded rod and two unistruts to support the base, just inside the leveling feet. It is recommended that vibration isolators be placed between the unistruts and dehumidifier base. See **Figure 8**. Do not position threaded rods over filter access doors. Allow 3" between the unit and threaded rods on the service access to remove the side panel if service is required. There must be a minimum clearance of 12" on one side of the unit to allow for removal of the filter.

FIGURE 8 – Suspended Installation

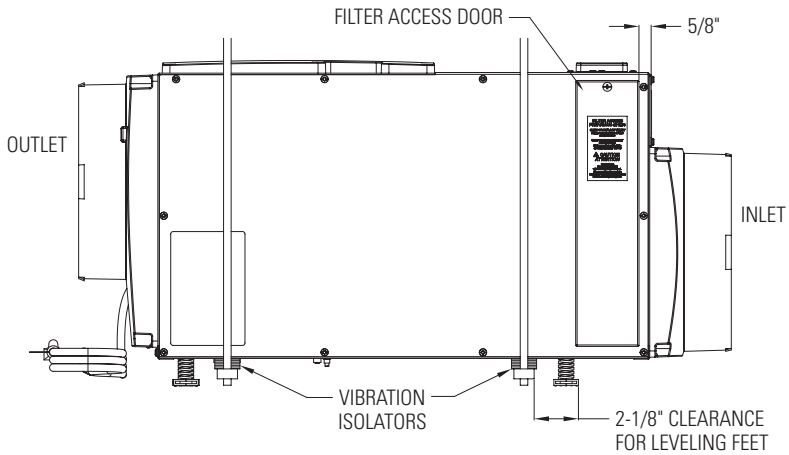

DRAIN INSTALLATION

The drain outlet on the dehumidifier can be hard piped using a 3/4" PVC Slip x 3/4" MNPT fitting and 3/4" nominal drain tubing or the provided 3/4" MNPT x 3/4" hose barb fitting. 3/4" clear PVC tubing can be used to drain the dehumidifier. Always maintain a constant downward slope from the dehumidifier to the drain and do not allow soft tubing to curl up which may result in air lock.

NOTE: PTFE thread seal tape is recommended for the threaded connection and hand tighten only. If hard pipe is used, PVC primer and cement is recommended for the slip fit connection. Remove drain insert before priming and gluing in the PVC fitting. Replace drain insert after PVC glue has fully dried.

⚠ CAUTION

Do not damage drain insert. The drain insert is a critical feature of the dehumidifier drain management system.

⚠ WARNING

Running the dehumidifier without the drain insert can lead to condensate leaks.

FIGURE 9 – Drain Insert

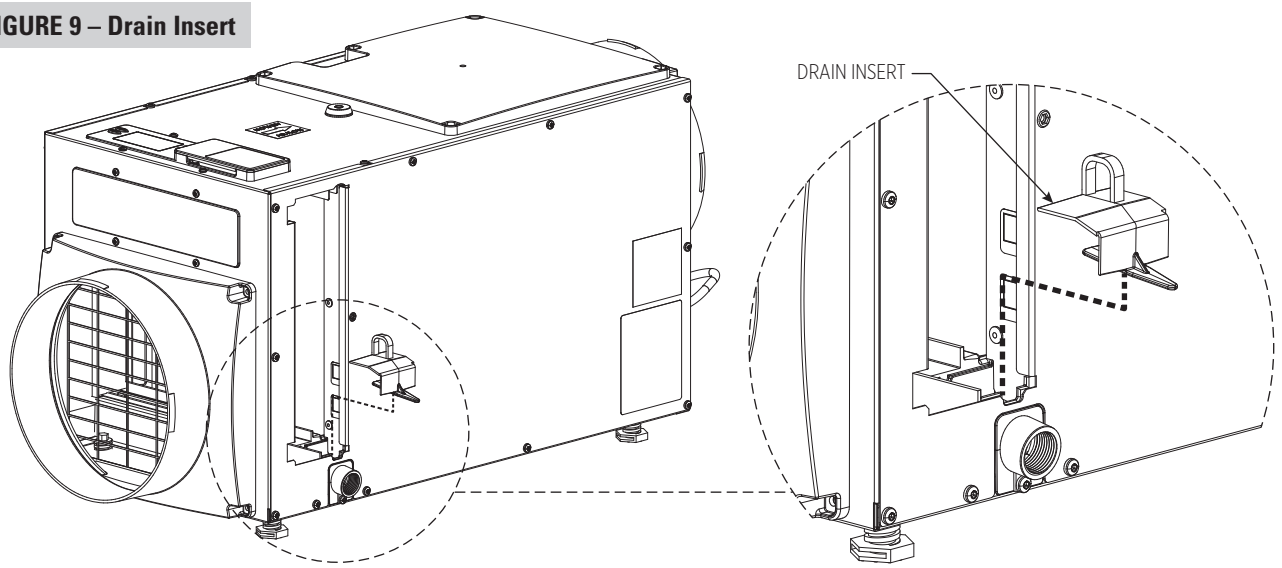

LEVELING

The feet can be adjusted to level the unit and accommodate drain fittings and secondary condensate pans as required. Refer to top mounted bubble level and adjust feet until bubble is within the outer circle. Leveling is required to ensure proper drainage from the dehumidifier. See **Figure 10**.

FIGURE 10 – Level the Unit

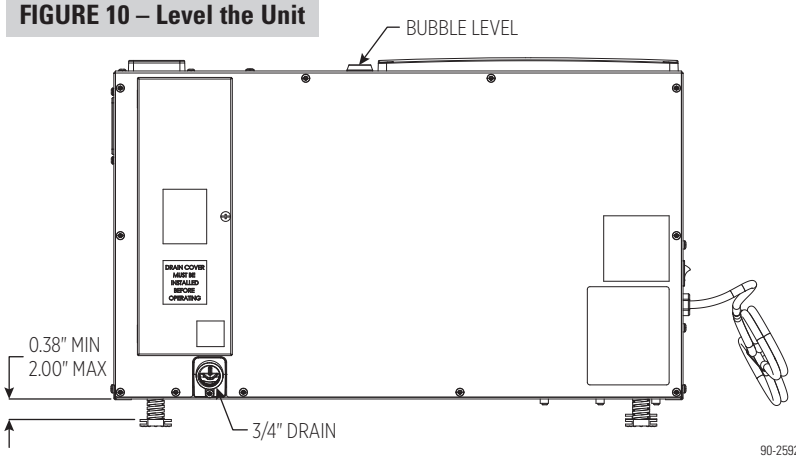

CONDENSATE PAN, CONDENSATE PUMP AND FLOAT SWITCH

Always install the dehumidifier in a condensate pan when locating in or above a finished space. Adhere to local codes regarding draining of the condensate pan. If a condensate pump is needed, install it in the condensate pan as well.

Install a condensate overflow safety switch (i.e. float switch) in the condensate pan, remove the factory installed jumper wire between the Float Switch terminals on the control and wire the float switch to the dehumidifier as shown in **Figure 11**. Overflow safety switches on condensate pumps can be wired to the Float Switch terminals in a similar fashion.

FIGURE 11 – Float Switch Wiring

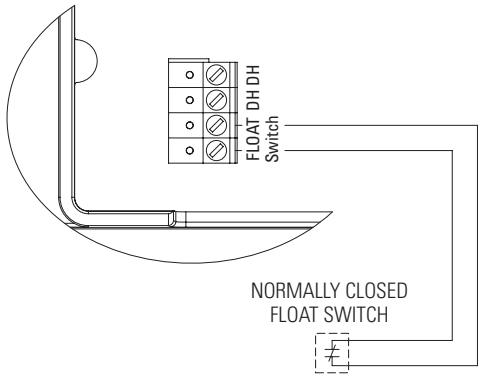

DUCTING TO HVAC SYSTEM – BASEMENT AND ATTIC INSTALLATIONS

The **Preferred Installation** is to duct the dehumidifier to pull air from and return dehumidified air to the HVAC return duct. This installation will ensure warm, dehumidified air is thoroughly mixed with the HVAC system air before being discharged into the living space. Alternatively, the dehumidifier can be ducted to discharge to the supply duct, but the external static pressure of the HVAC system must not exceed 0.4"w.c. for the DEHXXCDA1080-AO4 and 0.6"w.c. for the DEHXXCDA1100-AO4, as measured before the HVAC system filter and after the coil

Required Component
10" Ductwork

FIGURE 12 – Preferred Basement Installation

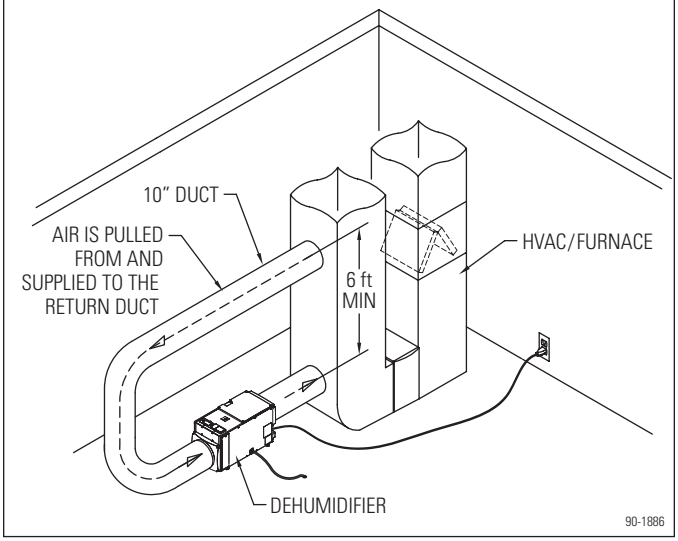

FIGURE 13 – Alternate Basement Installation

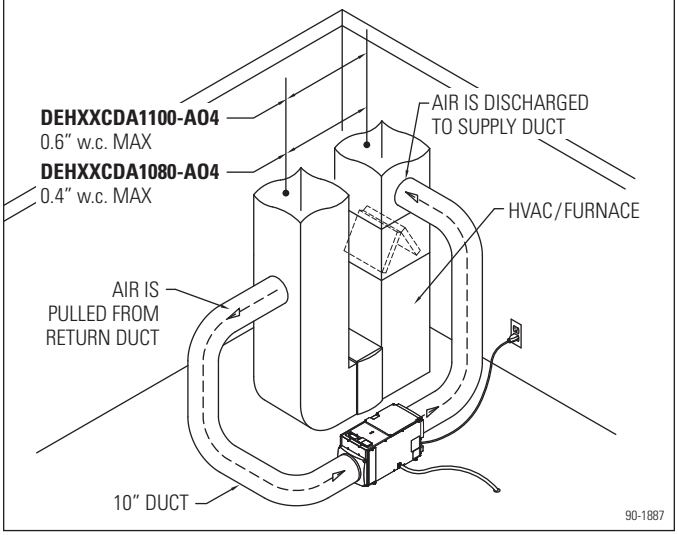

FIGURE 14 – Preferred Attic Installation

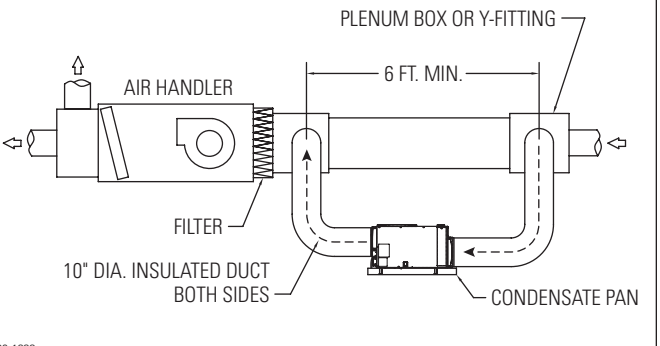

FIGURE 15 – Alternate Attic Installation

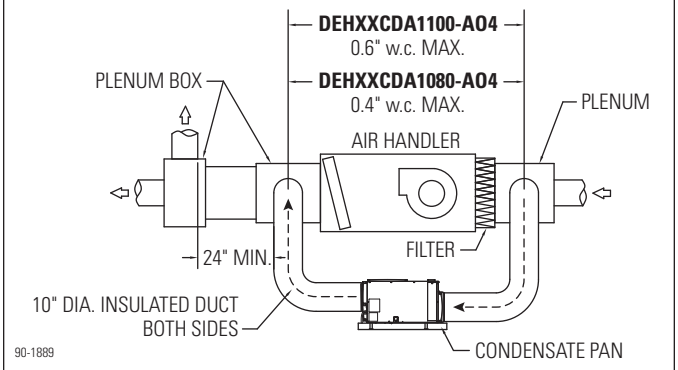

Ducting Notes:

- Use insulated duct when the dehumidifier is located in an unconditioned space such as an attic or a garage.
- Use a minimum of 12" of flex duct at the dehumidifier inlet and outlet to prevent vibration noise transmission.
- When ducting return to return (preferred), the dehumidifier must be wired to turn on the HVAC fan when operating (see page 13).
- When ducting return to supply, allow adequate space before the first branch duct to ensure the warm dehumidified air is thoroughly mixed with the HVAC system air.

⚠ CAUTION

Installing the dehumidifier in the Alternate applications will result in reduced performance based on amount of external static pressure.

DUCTING TO HVAC SYSTEM – CLOSET INSTALLATIONS

The dehumidifier in these applications is typically installed next to the HVAC equipment. In this installation, the dehumidifier inlet is not ducted and pulls from the living space through a grille or louvers in the HVAC closet door. The dehumidifier is ducted to the HVAC return duct or supply duct using the outlet on the top of the unit. **NOTE:** In the alternate closet installation, the supply side external static pressure of the HVAC system must not exceed 0.4"w.c. for the DEHXXCDA1080-AO4 and 0.6"w.c. for the DEHXXCDA1100-AO4.

⚠ WARNING

Closet installations are not approved with gas furnaces. Only install dehumidifier in a closet with electric heat or a fan coil system.

Required Component
10" Ductwork

FIGURE 16 – Preferred Closet Installation

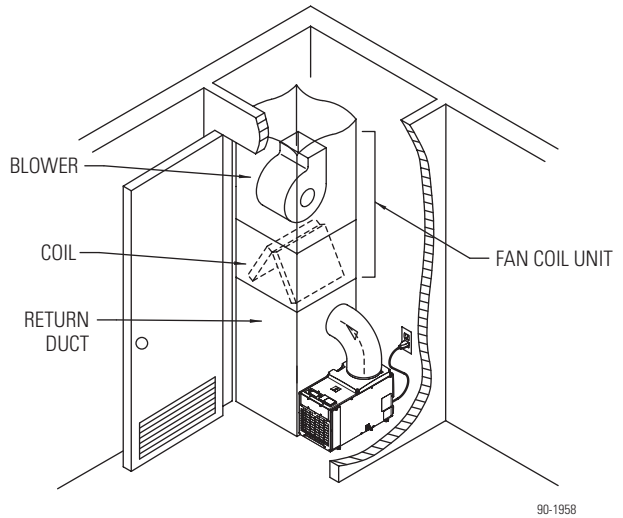

FIGURE 17 – Alternate Closet Installation

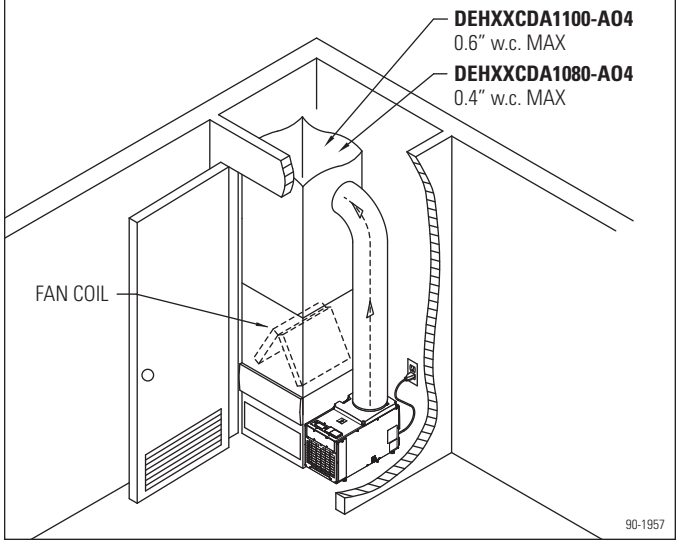

DUCTING FOR STAND ALONE INSTALLATIONS OR NON-DUCTED INSTALLATIONS

In this installation the dehumidifier is not ducted to the HVAC system and is used to dehumidify a specific area. This installation is typically in basements or crawl spaces.

Optional Components
10" Ductwork
Grilles with 10" Duct Collars

FIGURE 18 – Stand Alone Ducted

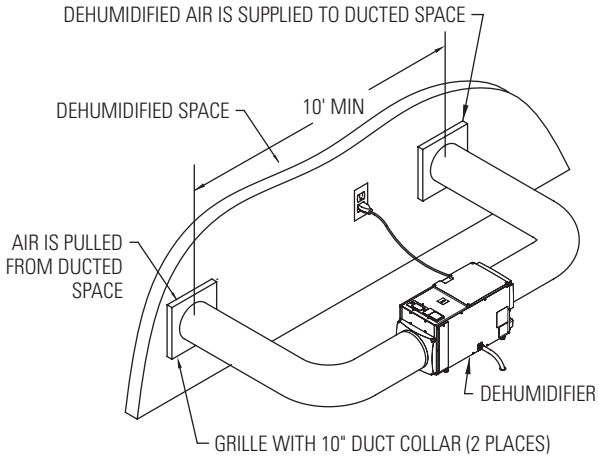

DUCTING FOR TWO ZONE INSTALLATIONS

In this installation the dehumidifier controls the humidity in two separate zones, a Primary and Secondary Zone. The dehumidifier will dehumidify the Primary Zone as the first priority, and will switch to the Secondary Zone after the dehumidification needs of the Primary Zone have been satisfied.

IMPORTANT: Normally Closed dampers must be installed in the ducts serving the Primary Zone and Normally Open dampers installed in the ducts serving the Secondary Zone.

Required Components
10" Ductwork and Fittings
Grilles with 10" Duct Collars
Drain Line
KDAZK0101DHM Zoning Kit includes 2 – 6510C Dampers, 2 – 6610C Dampers and a 24VAC (40VA) transformer

FIGURE 19 – Whole-Home Primary Zone Installation

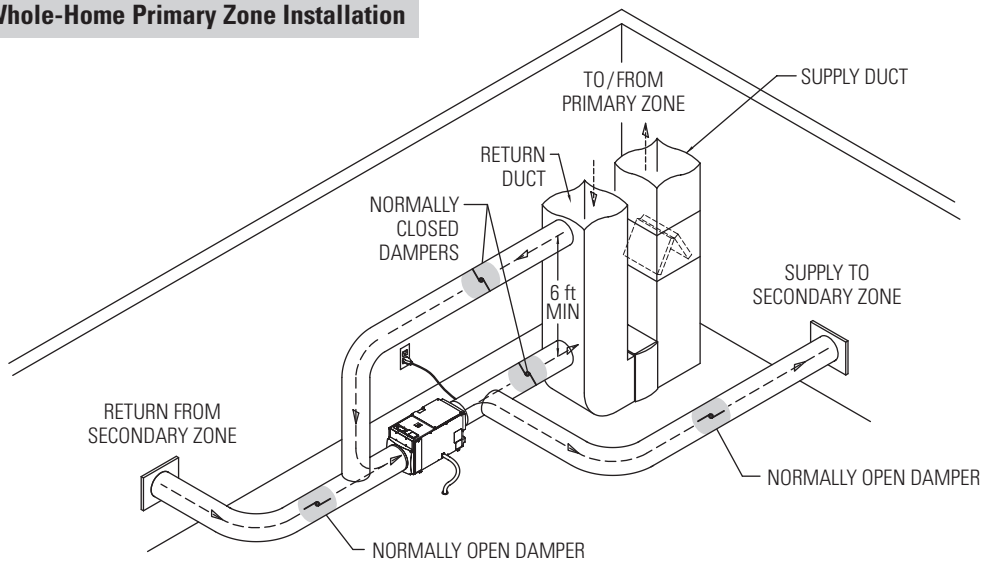

90-1875

FIGURE 20 – Whole-Home Secondary Zone Installation

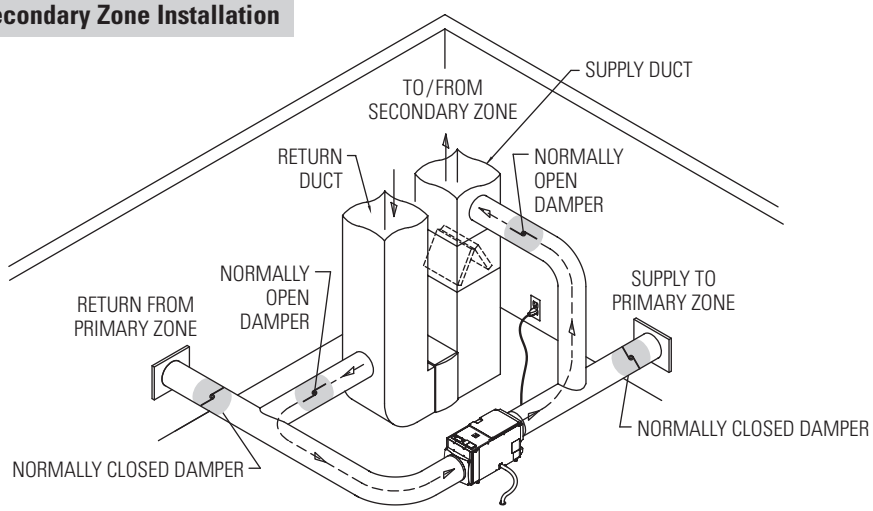

90-1895

MODEL 76C – EXTERNAL CONTROL OR CRAWL SPACE/SEALED ATTIC CONTROL AND WIRING

NOTE: Use 18-22 AWG wire for control wiring.

EXTERNAL CONTROL

Used as an external control, the Model 76C is mounted in the space that is to be dehumidified. When the dehumidifier is powered, the display on the dehumidifier control will show "EXTERNAL" to indicate that an external control is being used. External controls are recommended when the dehumidifier is installed in an attic and is ducted to the HVAC system.

The Model 76C uses a normally open (NO), dry contact (i.e. not a triac or other semiconductor) relay to complete the circuit between the DH terminals of the dehumidifier control.

⚠ CAUTION

If using other controls such as a thermostat with dehumidification outputs, use an isolation relay such as Totaline P283-0293. Applying a 24VAC signal to the DH DH terminals can cause equipment damage. Set the NO/NC switch on the dehumidifier control (see **Figure 21**) to correspond with the control being used.

If an external control is used in a zoned application, it must be located in the Primary Zone (refer to **TWO ZONE – PRIMARY AND SECONDARY ZONED INSTALLATION** on page 18 for details).

CRAWL SPACE/SEALED ATTIC CONTROL

Used as crawl space or sealed attic control (or remote control), the Model 76C is mounted in the living space while the dehumidifier is located in the area to be dehumidified. When the dehumidifier is powered, the display on the dehumidifier control will show "REMOTE" to indicate that a remote control is being used. The RH shown on the Model 76C is the RH measured at the dehumidifier.

Remote control is typically used for crawl space or sealed attic applications, but is also recommended when the dehumidifier and the space being dehumidified are inconvenient or difficult for the homeowner to access. Examples of this type of application include basements that may be inconvenient to access or storage areas.

FIGURE 21 – Model 76C External Control Wiring

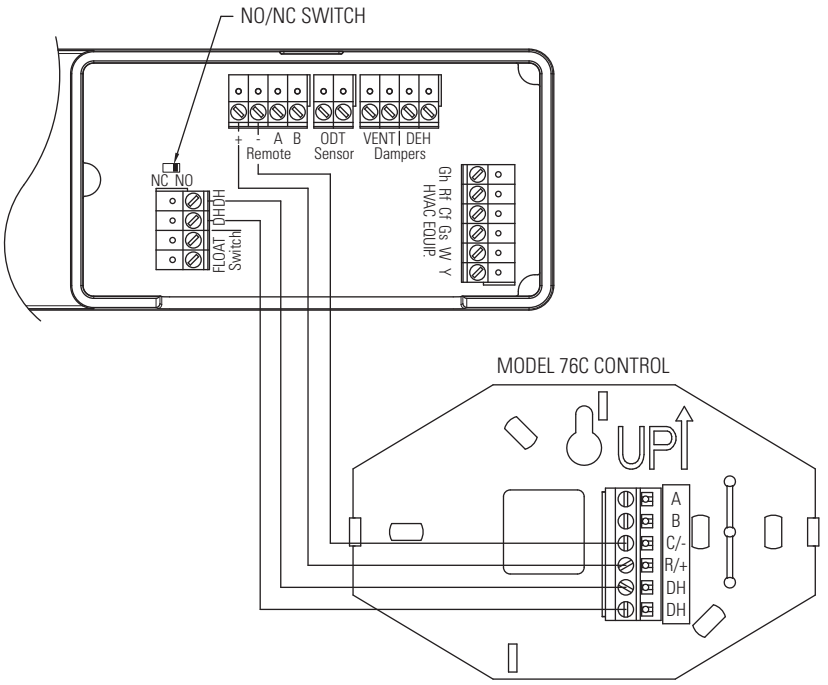

90-1862

FIGURE 22 – Model 76C Crawl Space/Sealed Attic (Remote) Wiring

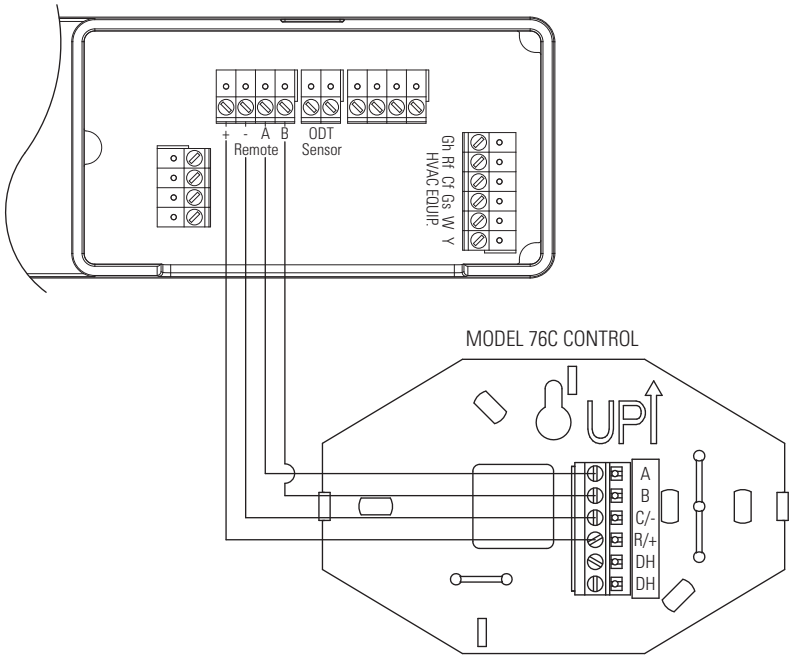

90-1860

WIRING THE DEHUMIDIFIER TO THE HVAC SYSTEM AND ZONE DAMPERS

NOTE: Use 18-22 AWG wire for wiring to HVAC system and zone dampers.

Pull off the wiring access cover near the dehumidifier control to access the wiring terminals. Snap the wiring access cover back into place after completing all wiring.

WIRING TO THE HVAC SYSTEM

When the dehumidifier is ducted to the HVAC system, it is recommended that it also be wired to the HVAC system as shown in **Figure 23**. If ducted to the HVAC system in return to return configuration, the dehumidifier **must** be wired to the HVAC system to prevent short circuiting dehumidified air directly back to the dehumidifier inlet. In return to supply ducting configuration, running the HVAC fan with the dehumidifier ensures the warm dry air is mixed with room air before being discharged to the home.

NOTE: For communicating furnaces and fan coils only:

1. Configure the G terminal at the user interface and set fan speed. See **Figure 24**.
2. Wire the Gh, Rf, Cf and Y terminals from the dehumidifier to the furnace. See **Figure 25**.

FIGURE 23 – Wiring to HVAC System

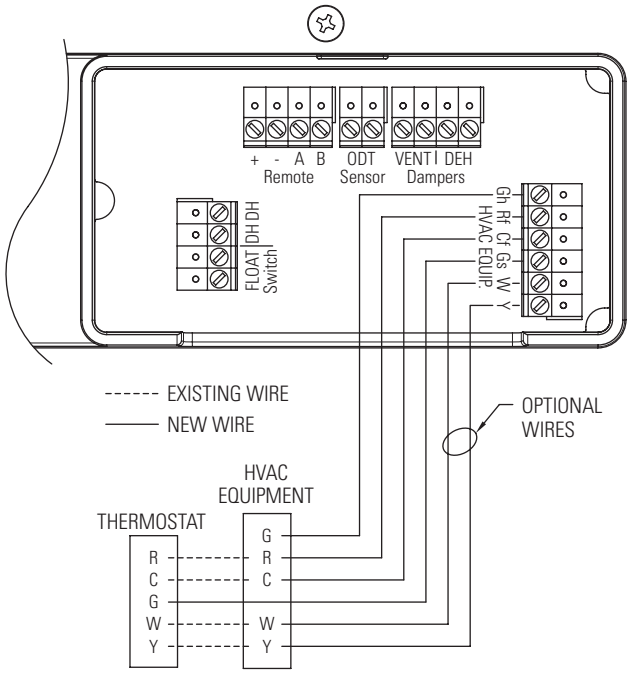

FIGURE 24 – Using Dehumidifier with Infinity/Evolution Control

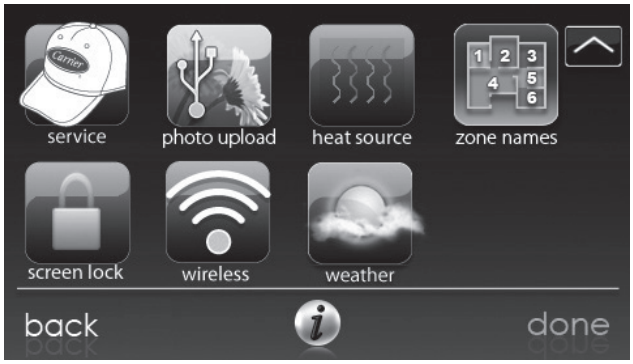

For Infinity & Evolution Touch screen controls, enter the Install/Service screen (found under Menu) by touching and holding the Service icon for 10 seconds.

Enter the Set-up menu and select "Furnace" or "Fan coil". Then select the "G terminal".

Then select "Fan" and the desired speed.

FIGURE 25

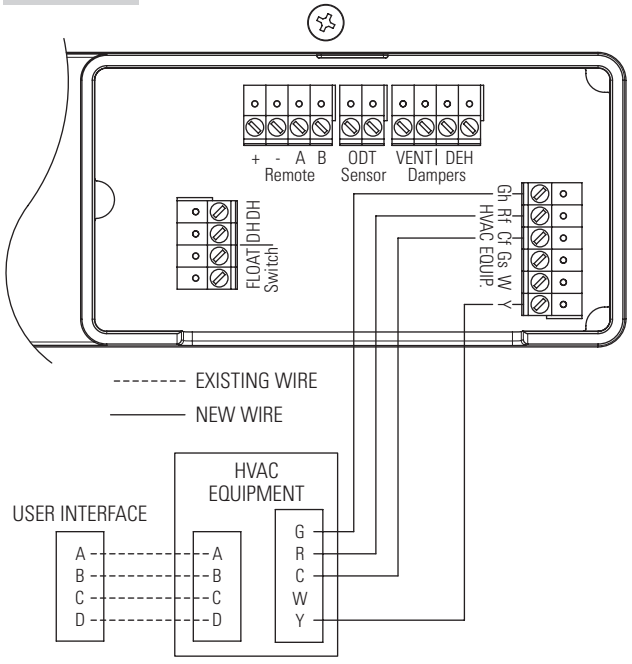

OPTIONAL W & Y WIRING

Wire the W and/or Y terminal to the HVAC system when using the ventilation feature of the dehumidifier (see **VENTILATION** on page 19).

NOTE: Only wire W if ventilation is required with outdoor temperatures below 20°F (-7°C). See **Figure 26**.

Wire the dehumidifier Y terminal to the HVAC system if it is desired to disable the dehumidifier compressor from operating when the air conditioning is running. See **DEH W/AC** in **SYSTEM SET-UP** on page 16 for additional set up steps required to access this feature.

ENERGY SAVING RECOMMENDATION: Select "DEH w/AC DISABLED". This allows the AC unit to dehumidify first and if it does not satisfy the dehumidification demand, the dehumidifier will run.

FIGURE 26 – Return Air Temperature Requirement for Furnaces

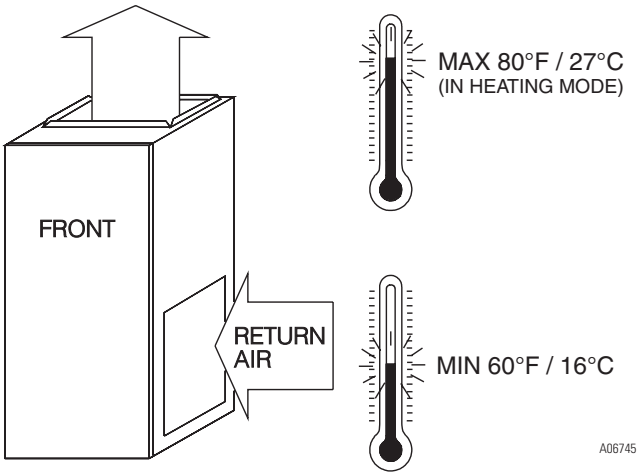

The furnace is designed for minimum continuous return-air temperature of 60°F db/16°C db or intermittent operation down to 55°F db/13°C db such as when used with a night setback thermostat. Return-air temperature must not exceed 80°F db/27°C db in the heating mode. Failure to follow these return-air temperature limits may affect reliability of heat exchangers, motors, and controls.

For accessory installation details, refer to the applicable instruction literature.

WIRING TO ZONE DAMPERS

FIGURE 27 – Two Zone Wiring On-Board Control

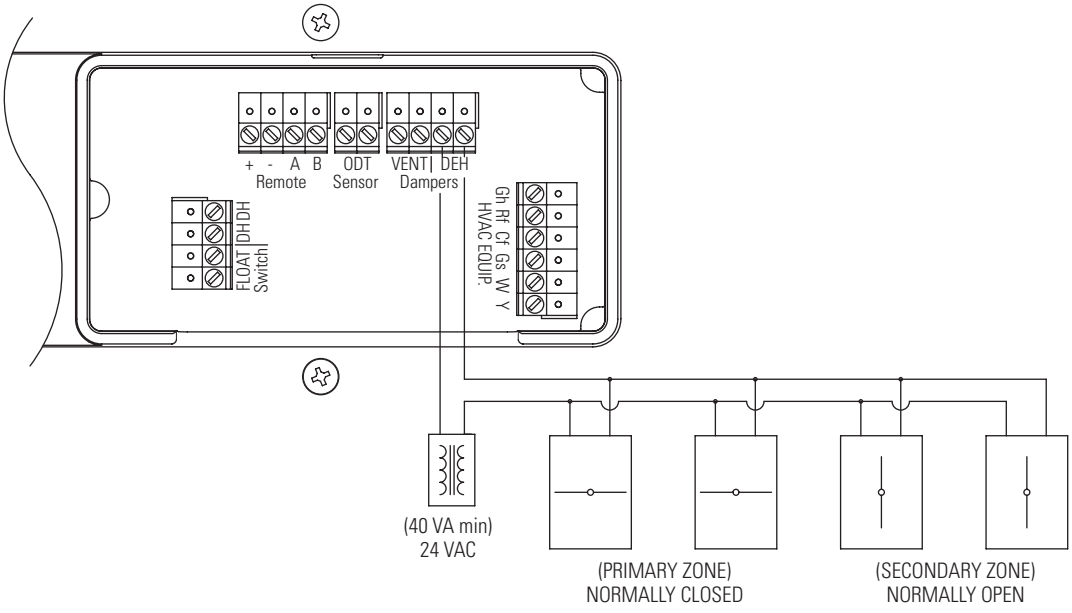

SYSTEM SET-UP & CHECKOUT

If dehumidifier installation does not include ventilation or zoning and will not be wired to an external control, remote control or the HVAC system, proceed to **Installer Test Mode** section on page 17.

1. Check all wiring.

2. Make sure the wire access cover has been snapped back onto the on-board control.

3. Plug unit in and turn power switch to ON.

4. The on-board control screen should display OFF.

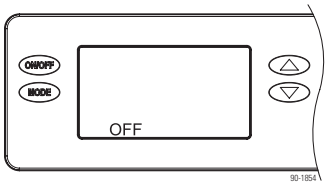

NOTE: If the display backlight is not on, the first button press (any button) will only turn on the backlight. Press the button a second time to achieve function.

5. Hold the MODE button on the on-board control for 3 seconds to enter the Installer Set-up Menu.

6. Navigate through the following screens to set up the dehumidifier for the installed application.

Use the UP or DOWN arrows to select items and use MODE to switch to the next set-up option. To exit installer set-up, all options must be scrolled through using the MODE button.

7. After the installer set up options have been completed, DONE will blink for 3 seconds and the control will return to the OFF screen.

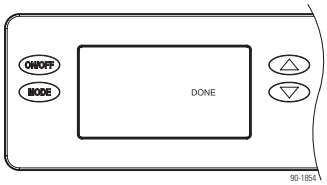

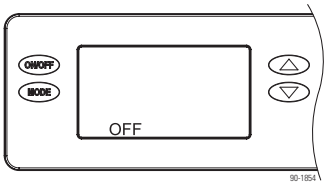

Remote Control – Crawl Space/Sealed Attic

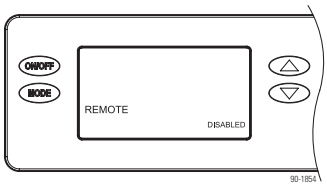

If not installing in a crawl space or sealed attic with Model 76C remote control, press MODE to go to VENT screen selections

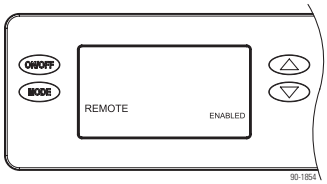

If installing in a crawl space or sealed attic with remote control, Enable and press MODE. The installer set-up is complete, proceed to **Installer Test Mode** section on page 17.

Ventilation

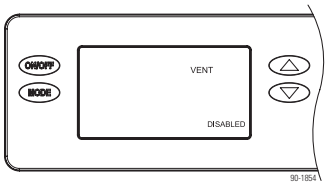

If not using the dehumidifier to bring in outdoor air, press MODE to go to ZONE screen selections.

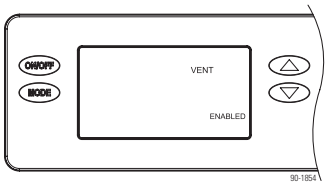

If using the dehumidifier for ventilation, Enable and press MODE to select TIMED or AUTO.

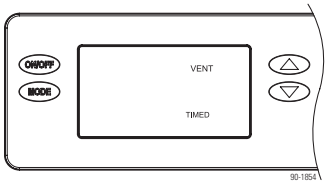

If ventilating based on time only (no outdoor temperature restrictions), press MODE at the VENT TIMED screen to go to ventilation time selection screen.

If ventilating with outdoor temperature restrictions, use the UP arrow to go from VENT TIMED to VENT AUTO –B and then the UP/DOWN arrows to select the desired ventilation mode, B, C, or D. Press MODE to go to the ventilation time selection screen.

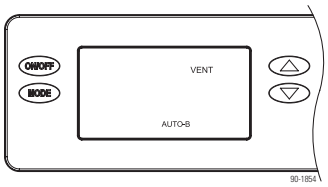

Vent-AUTO-B: Ventilation prevented when outdoor temperature is below 0°F and above 100°F. Between 0°F – 20°F ventilation is only allowed during a HVAC heat call.

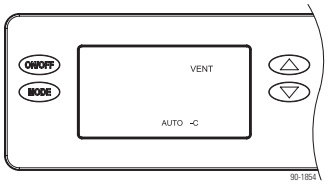

Vent-AUTO-C: Ventilation prevented when outdoor temperature is below 0°F and above 100°F.

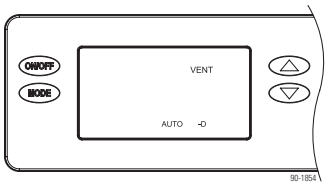

Vent-AUTO-D: Ventilation prevented when outdoor temperature is below 0°F and above 90°F. Between 0°F – 40°F ventilation is only allowed during a HVAC heat call.

Vent-AUTO-B, -C, -D modes apply outdoor temperature limits and require an outdoor temperature sensor to be installed.

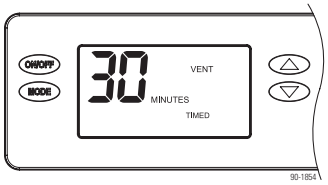

Press the UP or DOWN arrows to adjust the ventilation time per hour from 0 to 60 minutes. After selecting time, press MODE to go to the ZONE screen selections.

Zone

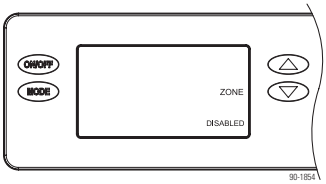

If installing the dehumidifier in a single zone application, select DISABLED and press MODE to go to the EXTERNAL control screen selections.

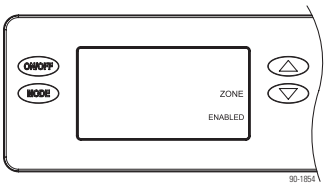

If installing the dehumidifier in a two-zone application, use the UP or DOWN arrows to select ENABLED and press MODE to go to the EXTERNAL control screen selections.

External Control

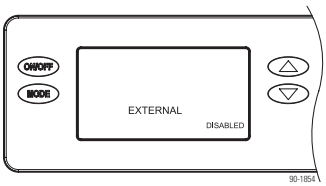

If using the dehumidifier on-board control select DISABLED and press MODE to go to the dehumidificaiton with air conditioning (DEH W/AC) screen selections.

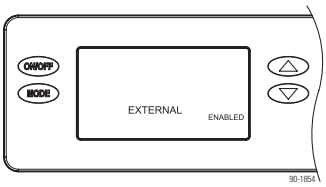

If using a Model 76C or other external control, such as a thermostat with dehumidifier outputs, use the UP or DOWN arrows to select ENABLED and press MODE to go to the dehumidification with air conditioning (DEH W/AC) screen selections.

DEH W/AC

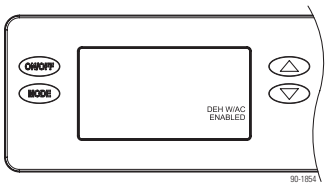

To allow dehumidification during active air conditioning, select ENABLED and press MODE.

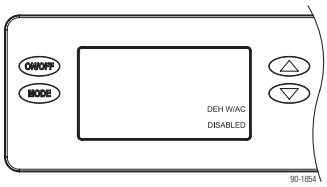

To disable dehumidification when the air conditioning is on, select DISABLED and Press MODE.

RH Offset

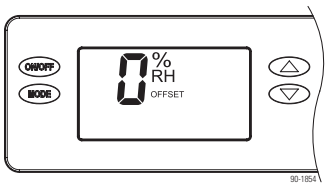

An offset can be applied to the on-board humidity humidity reading to avoid discrepancies with other humidity measuring devices in the home. Use the UP/DOWN arrows to select an offset from -5% to 5%. Press MODE to exit the installer set-up screens.

Installer Test Mode

If everything is properly wired, the dehumidifier and all of the wired components will turn on and off during Installer Test Mode to demonstrate that all are properly operating. Installer Test Mode lasts for four (4) minutes. If the ON/OFF button is pressed during test mode, the dehumidifier will exit Installer Test Mode and return to the OFF screen.

Dehumidification Only

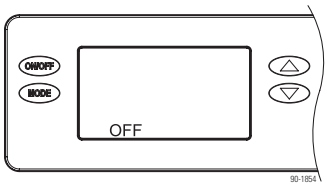

If the dehumidifier is not already OFF, press the ON/OFF button to turn it off.

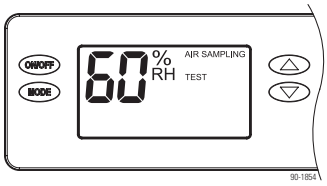

Press and hold the ON/OFF button and MODE buttons for 3 seconds. The measured humidity, AIR SAMPLING and TEST will show on the display. If wired to the HVAC system, the HVAC blower will turn on and if there is/are damper(s) wired to the DEH DAMPER terminals of the control, the damper(s) will energize.

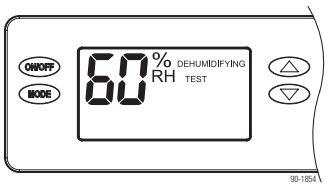

After three (3) minutes the dehumidifier compressor will turn on and DEHUMIDIFYING will replace AIR SAMPLING on the control screen.

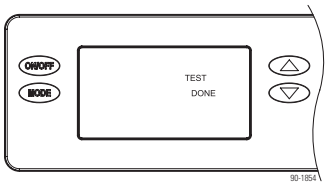

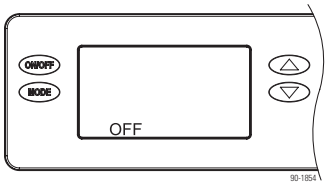

After one minute of compressor operation, all outputs will turn off and DONE will blink for 3 seconds and then return to the OFF screen.

Zoning and/or Ventilation

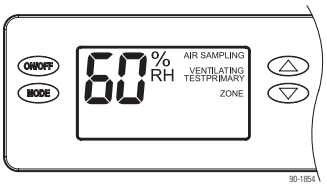

If the dehumidifier has been set up for ventilation, VENTILATING will appear on the display throughout Installer Test Mode, and the ventilation damper will be energized.

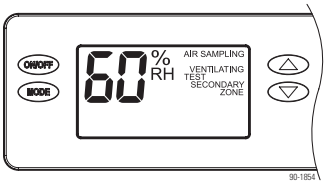

If the dehumidifier has been set up for zoning, PRIMARY ZONE will show on the display for the first minute of dehumidifier blower operation. After one minute, SECONDARY ZONE will show on the display and the zone dampers will de-energize.

START UP AND SEQUENCE OF OPERATION

SINGLE ZONE WHOLE HOUSE OR STAND ALONE USING THE DEHUMIDIFIER CONTROL

1. Press the ON/OFF button to turn the dehumidifier control ON. The display will show the current setting, and the dehumidifier blower and HVAC blower (if wired to the HVAC system) will turn on to start sampling the air.

   The setting will be replaced by the measured humidity and "AIR SAMPLING" will show on the display.
2. Use the UP or DOWN button to adjust the humidity setting as desired. The recommended initial setting is 59%.
3. After three (3) minutes of sampling, the measured humidity will be compared to the setting:

   a. If the humidity is above the setting, the dehumidifier compressor turns on and "AIR SAMPLING" will be replaced by "DEHUMIDIFYING". The compressor remains on until the measured humidity falls 3% RH below the setting.

   b. If the measured humidity is below the setting, the blowers turn off and the display returns to showing the RH setting.
4. The dehumidifier will sample again every 60 minutes, or at any time if the humidity setting is lowered.

SINGLE ZONE WHOLE HOUSE OR STAND ALONE USING MODEL 76C EXTERNAL CONTROL

1. Press the ON/OFF button to turn the dehumidifier control ON. "EXTERNAL" will show on the display to indicate that an external control is wired to the dehumidifier.
2. At the Model 76C, press the ON button; the Model 76C will display the measured RH.
3. Use the UP or DOWN button on the Model 76C to adjust the humidity setting as desired. The recommended initial setting is 59%.
4. If the RH measured by the Model 76C rises above the setting, the dehumidifier will turn on as will the HVAC blower (if wired to the HVAC system). "DEHUMIDIFYING" will appear on the dehumidifier control display to show that the Model 76C is calling for dehumidification. The dehumidifier and HVAC blower (if on) will turn off when the RH measured by the Model 76C drops 3% RH below the setting.

CRAWL SPACE OR SEALED ATTIC (REMOTE) CONTROL USING MODEL 76C

1. Press the ON/OFF button to turn the dehumidifier control ON. "REMOTE" will show on the display to indicate that a remote control is wired to the dehumidifier.
2. At the Model 76C, press the ON button; the Model 76C will display the RH measured at the dehumidifier, and the dehumidifier blower will turn on to start sampling the air.
3. Use the UP or DOWN button on the Model 76C to adjust the dryness level as desired. The dryness levels are from 1 to 7, with 1 being least dry and 7 being most dry; the recommended initial setting is 3.
4. After three (3) minutes of sampling, the measured humidity will be compared to the setting:

   a. If the humidity is above the setting, the dehumidifier compressor turns on and "ON" flashes on the Model 76C display.

   b. If the measured humidity is below the setting, the dehumidifier blower turns off.
5. The dehumidifier will sample again every 60 minutes, or at any time if the dryness level is increased.

TWO ZONE – PRIMARY AND SECONDARY

1. Press the ON/OFF button to turn the dehumidifier control ON.

   Dehumidification of the Primary Zone follows the same sequence as described to the left for Single Zone, with or without a Model 76C external control installed in the Primary Zone. The dehumidifier control display will show "PRIMARY ZONE" in addition to that described to the left when sampling or dehumidifying the Primary Zone. The zone dampers are energized when sampling or dehumidifying the Primary Zone.
2. The Secondary Zone uses the humidity setting on the dehumidifier control. During Secondary Zone sampling or dehumidification, the zone dampers are de-energized and the HVAC blower (if on) stops. "SECONDARY ZONE" will show on the dehumidifier control display when the Secondary Zone is either sampling or dehumidifying. If the Primary Zone had just finished a dehumidification demand, the compressor will continue to run during Secondary Zone sampling to prevent short cycling of the compressor.

   The Secondary Zone is sampled immediately after the Primary Zone has finished sampling, or if there is a call for dehumidification from the Primary Zone, immediately after the call has been satisfied. When a Model 76C external control is installed, the Secondary Zone will be sampled once per hour if there has not been a call for dehumidification from the Primary Zone. Secondary Zone sampling will also occur whenever the setting on the dehumidifier control is lowered.

VENTILATION

The dehumidifier can activate a normally closed damper to bring in outdoor air through a fresh air intake duct. This feature can not be used when a Model 76C has been installed in a Remote Control application, and is not recommended for two-zone installations.

Required Components
Model 6506C, Normally Closed Damper
6" Insulated Duct for Fresh Air Intake Duct
24 VAC Transformer (10VA min.) for Ventilation Damper
Intake Hood
18-22 AWG Wire

Optional Components
4401 Outdoor Temperature Sensor

INSTALLATION & WIRING

FIGURE 28 – Single Zone, On-Board Control Ventilation Installation

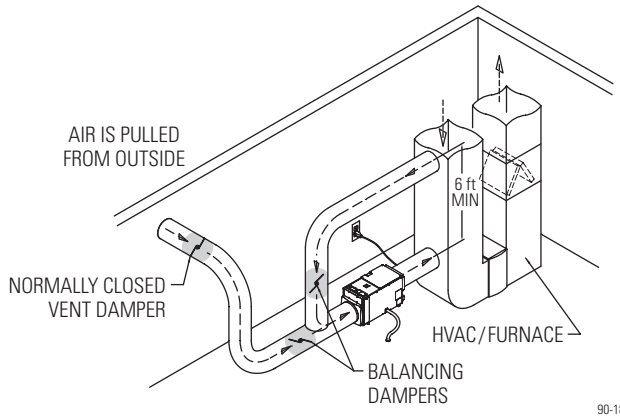

FIGURE 29 – Single Zone, External Control Ventilation Installation

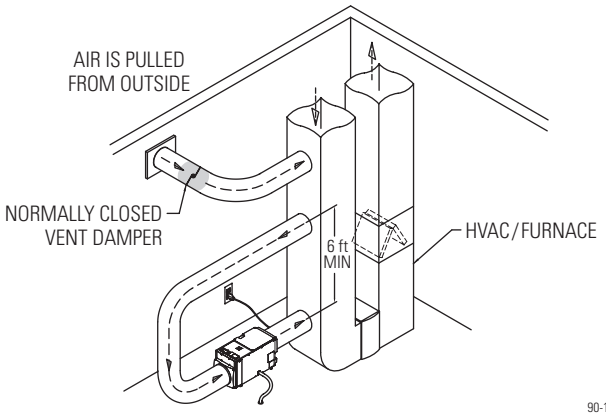

FIGURE 30 – Ventilation Wiring

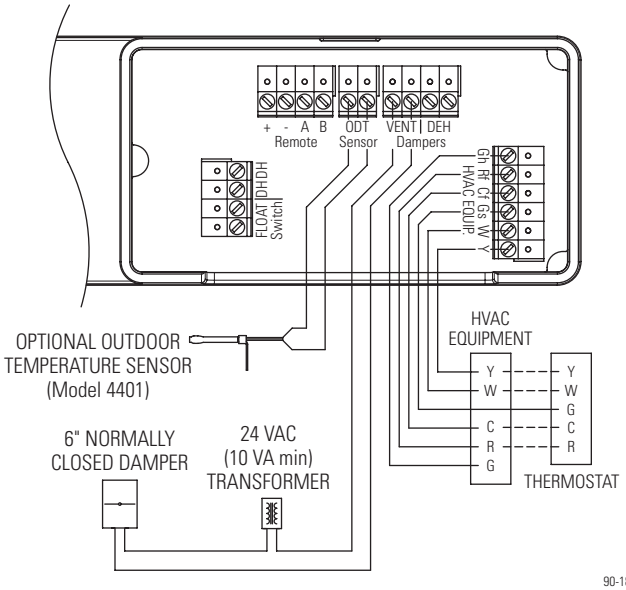

FIGURE 31 – Return Air Temperature Requirement for Furnaces

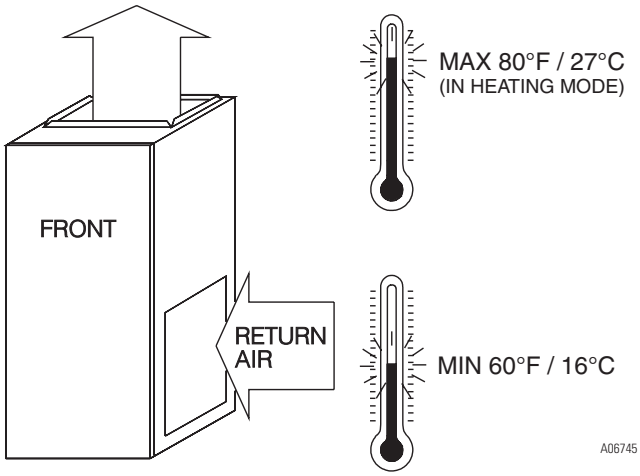

Ventilation of outside air under 20°F (-7°C) is not recommended in order to prevent cold air discharge temperatures and to meet furnace application requirements. Only wire W if ventilation is required under 20°F (-7°C). Recommended ventilation modes for the dehumidifier are **Vent-AUTO-B** and **Vent-AUTO-D**.

VENT-AUTO & VENT-TIMED

THE DEHUMIDIFIER CAN VENTILATE IN FOUR MODES:

Vent-Timed: Ventilation occurs based only on time setting; no temperature restrictions.

Vent-AUTO-B: Ventilation prevented when outdoor temperature is below 0°F and above 100°F. Between 0°F – 20°F ventilation is only allowed during a HVAC heat call.

Vent-AUTO-C: Ventilation prevented when outdoor temperature is below 0°F and above 100°F.

Vent-AUTO-D: Ventilation prevented when outdoor temperature is below 0°F and above 90°F. Between 0°F – 40°F ventilation is only allowed during a HVAC heat call.

Vent-AUTO-B, -C, -D modes apply outdoor temperature limits and require an outdoor temperature sensor to be installed.

NOTE: See **Figure 31** for return air temperature requirements for furnaces. Recommended ventilation modes for the dehumidifier are **Vent-AUTO-B** and **Vent-AUTO-D**.

OUTDOOR TEMPERATURE SENSOR INSTALLATION

The Outdoor Temperature Sensor should be installed outside in a shaded location, or in the outdoor air intake duct.

FIGURE 32 – ODT Mounted Outside

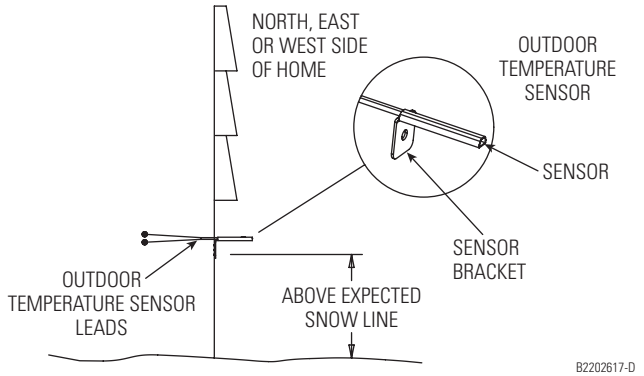

FIGURE 33 – ODT Mounted in Intake Duct

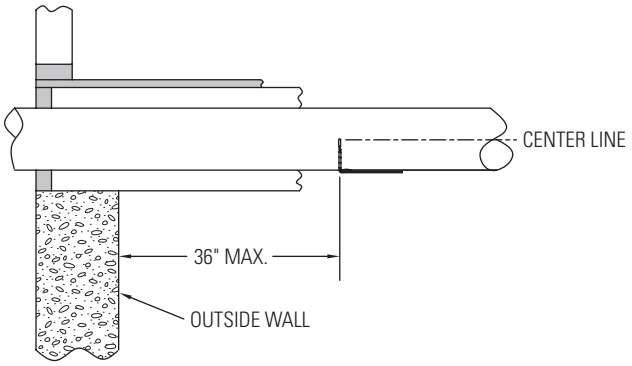

DETERMINE VENTILATION REQUIREMENTS

CALCULATING AIRFLOW REQUIREMENT

1. The MINIMUM ventilation requirement is calculated using ASHRAE 62.2-2010.

   ASHRAE Airflow in CFM = [House Area in Sq. Ft. x 0.01] + [(Number of Bedrooms +1) x 7.5]

   NOTE: Use 'Number of Bedrooms + 1' or 'Number of Occupants', whichever is larger.

2. **Table 1** shows the calculated airflow values to the nearest 5 CFM.
3. Record the required CFM. _____

TABLE 1 – CFM Required

House Sq. Ft.	Number of Bedrooms				
	2	3	4	5	6
1000	35	40	50		
1500	40	45	55	60	70
2000	45	50	60	65	75
2500	50	55	65	70	80
3000	55	60	70	75	85
3500			75	80	90

DETERMINE FRESH AIR DELIVERY RATE

1. Measure the negative static pressure of the return system at the location where the fresh air intake duct enters the return duct or dehumidifier inlet.
2. See **Table 2** for estimated inlet airflow in CFM, based on duct type, length and available negative pressure. Use an airflow measuring device for a more accurate airflow delivery rate.
3. Record the delivered CFM. _____

TABLE 2 – CFM Delivered

Duct Length	Negative Static Pressure ("w.c.) as Measured for Return Duct or Plenum											
	0.05		0.1		0.15		0.2		0.25		0.3	
	Flex	Pipe	Flex	Pipe	Flex	Pipe	Flex	Pipe	Flex	Pipe	Flex	Pipe
10 ft.	60	65	85	90	105	110	120	125	135	140	150	160
20 ft.	55	60	80	85	100	105	115	120	130	135	140	150
30 ft.	50	55	75	80	95	100	110	115	125	130	130	140

NOTE: For the table above, 6" flex duct is laid loose with two, wide 90° bends and a fully opened damper. Rigid pipe values are based on 6" duct, two 90° elbows, and a fully open damper. In both cases, the air intake is through a metal vent hood with inlet screen. Airflow may need to be adjusted up or down for variations in duct work.

DETERMINE CYCLE TIME

1. Use the Required CFM and Delivered CFM from the above steps to determine the Cycle Time from **Table 3**.
2. The values highlighted in gray cannot be set due to the maximum 60 minute Cycle Time. A second ventilation device (i.e., bigger duct or second duct) will be required to meet ventilation needs.

TABLE 3 – Cycle Time Setting (minutes) for Airflow Delivered vs. Airflow Required for 1 hour Cycle									
CFM Delivered	**CFM Required**								
	20	**30**	**40**	**50**	**60**	**70**	**80**	**90**	**100**
60	20	30	40	50	60	70	80	90	100
80	15	25	30	40	45	55	60	70	75
100	15	20	25	30	35	40	50	55	60
120	10	15	20	25	30	35	40	45	50
140	10	15	15	20	25	30	35	40	45
160	10	10	15	20	25	25	30	35	40

INSTALLER SETTINGS

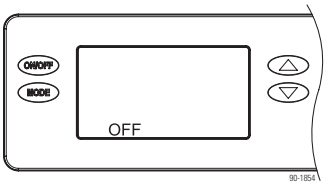

With the dehumidifier power switch on, press the ON/OFF button to turn the dehumidifier off.

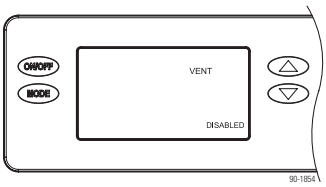

Press and hold the MODE button for 3 seconds to access the installer settings menu. Press and release the MODE button repeatedly until the VENT DISABLED screen appears.

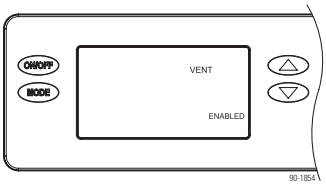

Press the UP or DOWN button to ENABLE ventilation, then press the MODE button to set Timed or Auto ventilation.

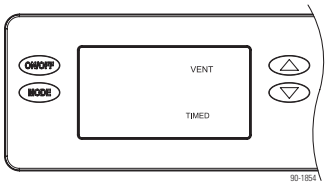

Press the UP or DOWN to toggle between VENT TIMED, VENT AUTO-B, VENT AUTO-C and VENT AUTO-D (refer to page 20 for a description of each). Press the MODE button to select the desired ventilation method and adjust the ventilation time.

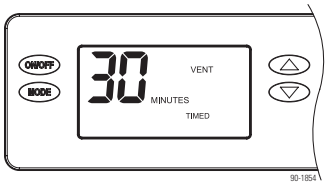

Press the UP or DOWN button to set the desired amount of ventilation time per hour from 0 to 60 minutes.

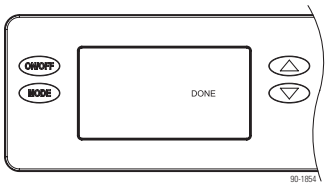

To complete, press the MODE button repeatedly until DONE appears on the display.

SEQUENCE OF OPERATION

When wired as shown in **Figure 30**, the ventilation damper will open whenever there is an HVAC heating (W), cooling (Y) or fan (Gs) call, allowing fresh air to be brought in when the HVAC blower is running (see VENTILATION WITH AN EXTERNAL CONTROL section below for exceptions). The ventilation damper will also open if the dehumidifier is operating. "VENTILATING" will show on the dehumidifier control when the dehumidifier is actively ventilating. When the HVAC call ends, the dehumidifier stops, or after the set amount of ventilation time has been met, the ventilation damper will be closed.

If the set amount of ventilation time has not been met before the end of the one-hour cycle, the dehumidifier will turn on the ventilation damper along with the HVAC blower to ensure the desired ventilation time is satisfied.

If the dehumidifier has been set up to operate ventilation with outdoor temperature restrictions (AUTO-B, AUTO-C or AUTO-D – refer to page 20) then ventilation will be limited as described.

DEHUMIDIFYING THE FRESH AIR

When the dehumidifier is set up for single zone and there is no external control installed, the dehumidifier will turn on its blower and measure the RH of the air entering the dehumidifier during ventilation when ducted as shown in **Figure 28**. If the relative humidity of the air entering the dehumidifier is higher than the setting, the dehumidifier compressor will turn to remove moisture.

VENTILATION WITH AN EXTERNAL CONTROL

When an external control is installed the dehumidifier will open the ventilation damper only when there is a cooling call (Y) or when the dehumidifier is operating, unless the ventilation need has not been met. If the set amount of ventilation time has not been met before the end of the one-hour cycle, the dehumidifier will turn on the ventilation damper along with the HVAC blower to ensure the desired ventilation time is satisfied.

ADJUSTING VENTILATION TIME AFTER INITIAL SET UP

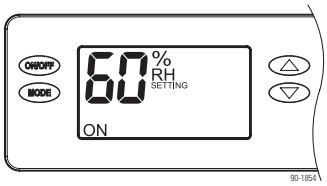

1. Press the UP or DOWN button to access the RH adjustment screen or to turn on the backlight if using an External Control.

2. Press the MODE button to toggle to the VENT TIME setting.

3. Press the UP or DOWN button to adjust the ventilation time (minutes). After adjusted, press nothing else; the screen will return to home screen after three (3) seconds.

TROUBLESHOOTING

DIAGNOSTIC CODES

When an error occurs, the Diagnostic Code along with SERVICE REQUIRED will be displayed on the control screen.

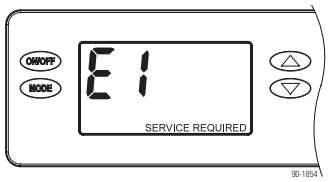

TABLE 4 – Diagnostic Codes

Diagnostic Code	Failure Mode	Action	Reset
E1	Internal Humidity or Temperature Sensor Open or Shorted	1. Cycle power to clear error code. 2. If error code reoccurs replace User Interface, Part No. 5492.	Cycle Power
E2	High Refrigeration Pressure	Verify that the fan works, the backflow damper swings freely and there is no blocked or restricted ductwork.	Cycle Power
E3	Model 76C Remote Control Communication Loss	1. Check connections between Model 76C and dehumidifier control board. Terminals should be fully inserted and secured in the control board and Model 76C control terminals. 2. If connections are correct and secure, turn off the dehumidifier and remove the Model 76C. Use a short section of 4-wire cable to reconnect the Model 76C to the control board. Turn the dehumidifier back on and increase the dryness level setting on the Model 76C. If the dehumidifier turns on, the problem is with the wiring between the dehumidifier and control.	Self-Correcting
E4	Insufficient Capacity	1. Check the frost sensor connection at the power board. Terminal should be fully seated on the power board pins. 2. Remove the side access panel and verify that the sensor is secured to the suction line. 3. If the sensor is connected and secured to the refrigeration line proceed to the next step. 4. Reset the fault by cycling power to the dehumidifier. 5. Turn the humidity setting down (below room/home humidity level) to make a dehumidification call. 6. Allow the fan and compressor to run for approximately 10-15 minutes and then enter diagnostic test mode by simultaneously pressing the UP ARROW and MODE buttons for 3 seconds. The LCD will display the temperature measured by the internal sensor while also displaying AIR SAMPLING and ON, the humidity measured by the internal sensor while also displaying %RH and ON, and the frost sensor temperature while also displaying ON. Scroll through these values and by using the UP/DOWN arrow buttons.	Cycle Power
E5	High Temperature Thermistor Failure	1. Check the high temperature sensor connection at the power board. Terminal should be fully seated on the power board pins. 2. Remove the side access panel and verify the sensor is not damaged and connected to the refrigeration line coming from the compressor. 3. If the sensor is connected and secured to the refrigeration line, it may need to be replaced with Part No. 5484.	Cycle Power
E6	Low Temperature Thermistor Failure	1. Check the low temperature sensor connection at the power board. 2. Remove the side access panel and verify the sensor is not damaged and connected to the suction line. 3. If the sensor is connected and secured to the refrigeration line, it may need to be replaced with Part No. 5483.	Cycle Power

TABLE 4 – Diagnostic Codes (continued)

Diagnostic Code	Failure Mode	Action	Reset
E7	Float Switch Open	1. Empty the condensate pan. 2. Check the float switch connection at the control board. 3. If not using a float switch, verify jumper is between float switch terminals on dehumidifier control board. 4. If the problem persists, replace the float switch.	Self-Correcting
E8	Inlet Air Temperature Out of 50°F – 104°F range, or dew point below 40°F	Verify all ductwork is properly sealed.	Self-Correcting
E9	Outdoor Temperature Sensor Open or Shorted	1. Check the sensor connection at the power board. 2. Remove the wires from the terminals and measure the resistance. A short circuit will have a resistance very close to 0 Ohms and an open circuit will have a very very high resistance. The table at right can be used to approximate the resistance based on outdoor temperature. 3. If the sensor is not reading correctly, replace the sensor, Part No. 4401. **Outdoor Temperature / Resistance** 0°F – 84,500 Ohms 20°F – 46,000 Ohms 40°F – 26,000 Ohms 60°F – 15,500 Ohms 80°F – 9,500 Ohms 100°F – 6,000 Ohms	Self-Correcting

TABLE 5 – Troubleshooting Guide

Symptom	Possible Reason	Troubleshooting Procedure
Dehumidifier does not turn on/run.	No power to unit.	• Check that the dehumidifier is plugged in. • Check that the power switch is turned ON. • Check that the control is turned ON. • Check that the circuit breaker has not tripped.
Dehumidifier blower is running but with little or no airflow.	Pressure drop across dehumidifier is higher than 0.4"w.c. for Model DEHXXCDA1080-AO4 or 0.6"w.c. for Model DEHXXCDA1100-AO4.	• Check dehumidifier air filter and wash or replace. • Check for blocked duct work and clear. • Verify that the outlet collar with backflow damper is installed on the outlet side of the dehumidifier. • Check if backflow damper is blocked or stuck and remove obstruction.
Dehumidifier blower is running but compressor is not.	Float switch open.	• If float switch installed, check connections at control board and empty condensate pan. • If no float switch installed check that the jumper is installed at the float switch terminals on the control board.
	Coil frosting.	• Lack of or reduced airflow. Check dehumidifier air filter and wash or replace. • Check for blocked duct work. • Inlet air conditions below 60°F. Increase the humidity setting.
	Inlet air temperature is outside of the 50°F – 104°F range or the dew point is below 40°F and there is a demand for dehumidification.	• Verify all ductwork is properly sealed.
When zoned, the dehumidifier damper does not open in INSTALLER TEST mode.	Incorrect damper wiring or bad connection.	• Verify wiring between dampers and 24 VAC transformer. • If wired for Two Zone operation, verify that 24 VAC transformer is 40 VA minimum. • Check all wiring connections between dampers and control board. • Verify the normally closed dampers are in the Primary Zone ductwork and the normally open dampers are in the Secondary Zone ductwork.
The ventilation damper does not open when the HVAC fan is active.	Cycle time has been met.	• The damper will not open if the Ventilation Time has already been met.
	ODT error or outdoor air outside of ODT range.	• Check that the ODT is wired correctly to the dehumidifier control board and connections are secure. • Check that the ODT is installed in the outdoor air intake according to the set-up specified in the Ventilation Section beginning on page 19. • Remove the ODT leads from the dehumidifier control board and check the resistance. Compare the reading with the table shown.

Outdoor Temperature	Resistance
0°F	84,500 Ohms
20°F	46,000 Ohms
40°F	26,000 Ohms
60°F	15,500 Ohms
80°F	9,500 Ohms
100°F	6,000 Ohms

Dehumidifier is not draining properly.	Drain line blocked or unit not level.	• Verify that the unit is level. • Check the drain line blockages and for a continuous downward slope. • Verify presence and condition of drain insert. See **MAINTENANCE** in Owner's Manual for cleaning procedure, or replace with part number 5885 if missing or damaged.
The HVAC fan turns on unexpectedly.	Dehumidifier is sampling or ventilation in progress.	• The dehumidifier will turn on the HVAC fan during air sampling or as needed to meet the ventilation time.
Dehumidifier is producing hot air.	Normal function.	• Air is reheated across the condenser coil, resulting in a temperature rise between inlet and outlet.

SERVICE PARTS

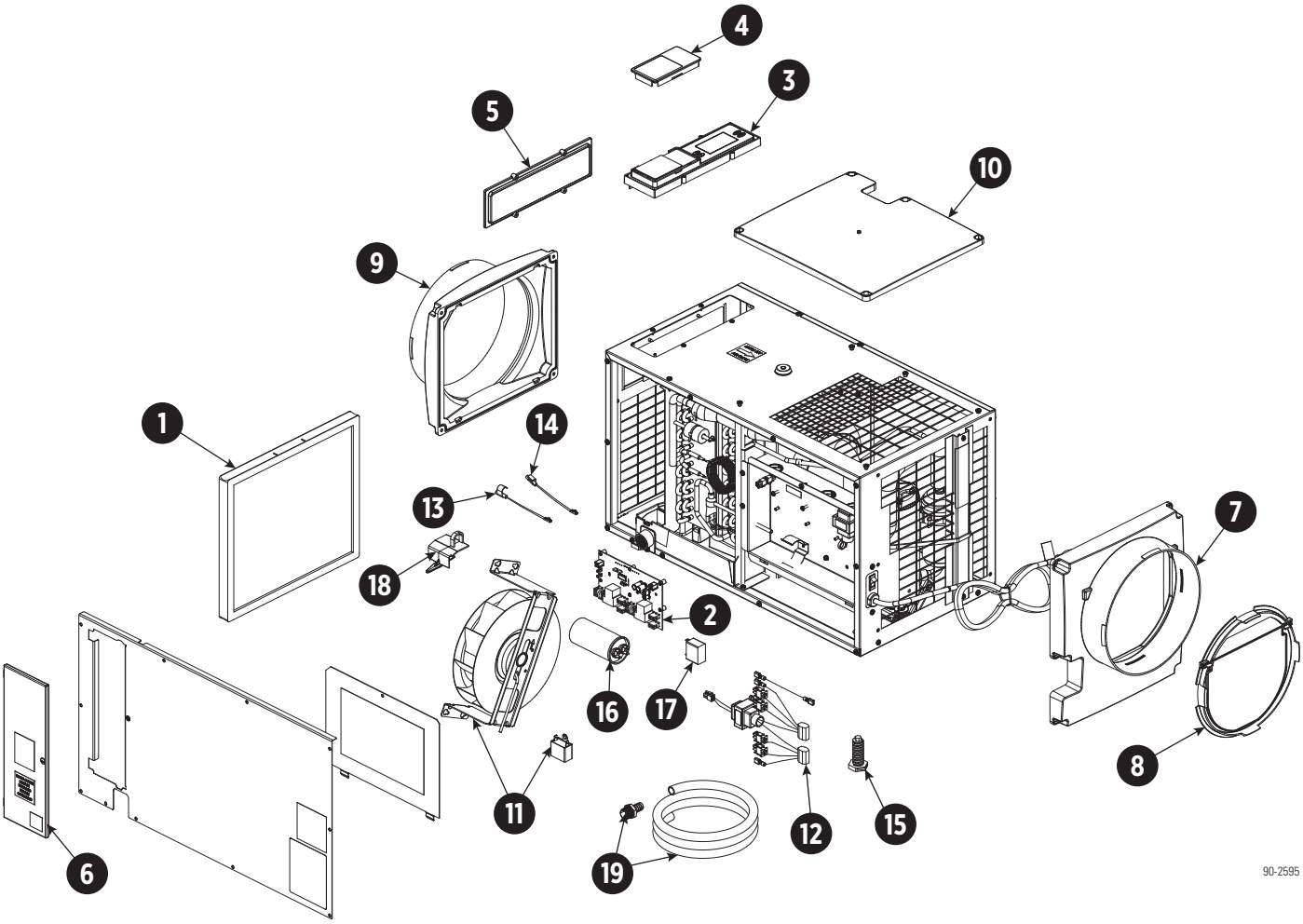

No.	Part Description	Part No.
1	EZK Filter, 11.88 x 13.5 x 1"	5896
2	Internal Control Board, Deh	5478
3	User Interface Assembly, Deh	5492
4	Wiring Access Door, Deh	5479
5	Hole Cover, UI Ctrl, Deh	5493
6	Door, Filter Access, Deh	5897
7	Outlet Duct Panel, Deh	5495
8	Backflow Damper, 10", Deh	5480
9	Inlet Duct Panel, Deh	5496
10	Cover, Outlet, Deh	5497
11	Fan, 80pt Deh, with 6MFD Capacitor	5898
	Fan, 100pt Deh, with 12MFD Capacitor	5899

No.	Part Description	Part No.
12	Wire Harness, Power, Deh	5901
13	Sensor, Low Temperature, Deh	5483
14	Sensor, High Temperature, Deh	5484
15	Leveling Foot, Deh	5485
16	Capacitor, Run, 50µF	5778
17	Capacitor, 6MFD, 250VAC, 80pt Deh	5583
	Capacitor, 12MFD, 450VAC, 100pt Deh	5491
18	Drain Insert	5902
19	Drain Tube + Fitting	5666
Not Shown		
Remote Wall Control		76C

Copyright 2021 CAC / BDP • 7310 W. Morris St. • Indianapolis, IN 46231
Edition Date: 1/21
Catalog No: IM-DEHXXCDA-02
Manufacturer reserves the right to change, at any time, specifications and designs without notice and without obligations.
Replaces: IM-DEHCRCDB-02

10015554 B2209237A 1.21