N5A8T
2-Stage Air Conditioner with R-454B Refrigerant 2 To 5 Tons

Product Specifications

This unit has been designed utilizing non-ozone depleting and low global warming potential R-454B refrigerant.
Air Conditioners with R-454B refrigerant provide a collection of features unmatched by any other family of equipment.

NOTE: Ratings contained in this document are subject to change at any time. Always refer to the AHRI directory (www.ahridirectory.org) for the most up-to-date ratings information.

Industry leading Features / Benefits

Efficiency

- Up to 18.5 SEER2 / Up to 14.5 EER2
- Indoor air quality accessories available

Sound

- Sound level as low as 68 dBA

Comfort

- System supports Thermidistat or standard 2-stage thermostat controls

Reliability

- Non-ozone depleting and low global warming potential R-454B refrigerant
- Front-seating service valves
- 2-stage scroll compressor
- Internal pressure relief valve
- Internal thermal overload
- Filter drier
- Balanced refrigeration system for maximum reliability

Durability

- Protection Package: Solid, Durable sheet metal construction
- Post-painted cabinet finish over galvanized steel

Applications

- Long-line - up to 250 feet (76.2 m) total equivalent length, up to 200 feet (60.96 m) condenser above evaporator, or up to 80 ft. (24.38 m) evaporator above condenser (See Long Line Guideline for more information.)
- Low ambient cooling (down to 0°F / -17.8°C) with approved low ambient accessory kits.

Limited Warranty

- 5-year parts limited warranty (including compressor and coil)
  - 10-year parts limited warranty (including compressor and coil) with timely registration*.
    Equipment must be registered within 90 days of original installation, except in jurisdictions where warranty benefits cannot be conditioned on registration.

* Applies to original purchaser/homeowner and not available to subsequent owners except in jurisdictions where applicable laws dictate otherwise.

See warranty certificate for complete details and restrictions.

MODEL NUMBER NOMENCLATURE

1	2	3	4	5	6, 7	8	9	10	11	12
N	**5**	**A**	**8**	**T**	**24**	**A**	**K**	**A**	**W**	**A**
Branding	**Refrigerant**	**Type**	**SEER2**	**Design Type**	**Nominal Capacity**	**Feature**	**Voltage**	**Special Feature**	**Region**	**Major Series**
N = ICP Commercial	**5** = R-454B	**A** = AC	**8** = 18 SEER2	**T**=2-Stage	**24** = 24,000 BTUH (2 Tons) **36** = 36,000 BTUH (3 Tons) **48** = 48,000 BTUH (4 Tons) **60** = 60,000 BTUH (5 Tons)	**A** = Standard	**K** = 208-230-1	**A** =Standard	**W**=Standard SW AC	**A** = Initial

CATALOG ORDERING NUMBERS

Size	Model Ordering Number
24	N5A8T24AKAWA
36	N5A8T36AKAWA
48	N5A8T48AKAWA
60	N5A8T60AKAWA

STANDARD FEATURES

FEATURES	Unit Size			
	24	**36**	**48**	**60**
R-454B Refrigerant	X	X	X	X
Maximum SEER2 Rating*	18.5	17.0	18.0	16.5
2-Stage Scroll Compressor	X	X	X	X
Low Ambient Cooling Capability with Approved Kits	X	X	X	X
Factory Provided, Field Installed Filter Drier	X	X	X	X
Front Seating Service Valves	X	X	X	X
Internal Pressure Relief Valve	X	X	X	X
Internal Thermal Overload	X	X	X	X
Long Line capability	X	X	X	X

* With approved combinations
X = Standard O = Accessory

PHYSICAL DATA

UNIT SIZE	24	36	48	60
Compressor Type	Scroll			
REFRIGERANT	R-454B			
Charge lb (kg)*	5.32 (2.41)	7.25 (3.29)	8.65 (3.92)	9.42 (4.27)
COND FAN	Forward Swept, Propeller Type, Direct Drive			
Air Discharge	Vertical			
Air Qty (CFM)	2640	3120	4781	4781
Motor HP	1/3	1/3	1/3	1/3
Motor RPM	615	615	815	8815
COND COIL				
Face Area (Sq ft)	19.3	22.6	22.6	25.1
Fins per In.	25	20	20	20
Rows	1	2	2	2
Circuits	5	7	7	7
VALVE CONNECT. (In. ID)				
Vapor	3/4	7/8	7/8	7/8
Liquid	3/8”			
REFRIGERANT TUBES* (In. OD)				
Rated Vapor†(0-80 Ft Tube Length)	3/4	7/8	1-1/8	1-1/8
Liquid (0-80 Ft Tube Length)	3/8”			

*. For 15 ft. Lineset
†. Units are rated with 25 ft (7.6 m) of lineset length. See Vapor Line Sizing and Cooling Capacity Loss table when using other sizes and lengths of lineset.
NOTE: See unit installation instructions for proper installation

Manufacturer reserves the right to change, at any time, specifications and designs without notice and without obligations.

REFRIGERANT PIPING LENGTH LIMITATIONS

Maximum Line Lengths:

The maximum allowable total equivalent length for air conditioners varies depending on the vertical separation. See the tables below for allowable lengths depending on whether the outdoor unit is on the same level, above or below the outdoor unit.

Liquid Line Sizing and Maximum Total Equivalent Lengths for Cooling Only Systems with R-454B Refrigerant:

The maximum allowable length of a residential split system depends on the liquid line diameter and vertical separation between indoor and outdoor units.

Table 1 – Maximum Total Equivalent Length
Outdoor Unit BELOW Indoor Unit

Size	Liquid Line Connection	Liquid Line Diam. w/TXV	AC with R-454B Refrigerant Maximum Total Equivalent Length†: Outdoor unit BELOW Indoor Vertical Separation ft (m)								
			0-5 (0-1.5)	6-10 (1.8-3.0)	11-20 (3.4-6.1)	21-30 (6.4-9.1)	31-40 (9.4-12.2)	41-50 (12.5-15.2)	51-60 (15.5-18.3)	61-70 (18.6-21.3)	71-80 (21.6-24.4)
24	3/8	1/4	75	75	75	50	50	--	--	--	--
		5/16	250*	250*	250*	250*	250*	225*	175	125	100
		3/8	250*	250*	250*	250*	250*	250*	250*	250*	250*
36	3/8	5/16	175	150	150	100	100	100	75	--	--
		3/8	250*	250*	250*	250*	250*	250*	250*	250*	250*
48	3/8	3/8	250*	250*	250*	250*	250*	250*	230	160	--
60	3/8	3/8	250*	250*	250*	225*	190	150	110	--	--

* Maximum actual length not to exceed 200 ft (61 m)
†Total equivalent length accounts for losses due to elbows or fitting. See the Long Line Guideline for details.
-- = outside acceptable range

Table 2 – Maximum Total Equivalent Length
Outdoor Unit ABOVE Indoor Unit

Size	Liquid Line Connection	Liquid Line Diam. w/TXV	AC with R-454B Refrigerant Maximum Total Equivalent Length†: Outdoor unit ABOVE Indoor Vertical Separation ft (m)							
			25 (7.6)	26-50 (7.9-15.2)	51-75 (15.5-22.9)	76-100 (23.2-30.5)	101-125 (30.8-38.1)	126-150 (38.4-45.7)	151-175 (46.0-53.3)	176-200 (53.6-61.0)
24	3/8	1/4	100	125	175	200	225*	250*	250*	250*
		5/16	250*	250*	250*	250*	250*	250*	250*	250*
		3/8	250*	250*	250*	250*	250*	250*	250*	250*
36	3/8	5/16	225*	250*	250*	250*	250*	250*	250*	250*
		3/8	250*	250*	250*	250*	250*	250*	250*	250*
48	3/8	3/8	250*	250*	250*	250*	250*	250*	250*	250*
60	3/8	3/8	250*	250*	250*	250*	250*	250*	250*	250*

* Maximum actual length not to exceed 200 ft (61 m)
†Total equivalent length accounts for losses due to elbows or fitting. See the Long Line Guideline for details.

Table 3 – Refrigerant Charge Adjustments

Liquid Line Size	R-454B Charge oz/ft (g/m)
3/8	0.60 (17.74) (Factory charge for lineset = 9 oz / 266.16 g)
5/16	0.40 (11.83)
1/4	0.27 (7.98)

Units are factory charged for 15 ft (4.6 m) of 3/8” liquid line. The factory charge for 3/8” lineset 9 oz.(266.16 g). When using other length or diameter liquid lines, charge adjustments are required per the chart above.

Charging Formula:

[(Lineset oz/ft x total length) – (factory charge for lineset)] = charge adjustment

Example 1: System has 15 ft of line set using existing 1/4” liquid line. What charge adjustment is required?

Formula:(.27 oz/ft x 15ft) – (9 oz) = (-4.95) oz.

Net result is to remove 4.95 oz of refrigerant from the system

Example 2: System has 45 ft of existing 5/16” liquid line. What is the charge adjustment?

Formula:(.40 oz/ft. x 45ft) – (9 oz.) = 9 oz.

Net result is to add 9 oz of refrigerant to the system

NOTE: Conditions must be favorable for charging by subcooling method. Indoor temperature must be 70°F to 80°F (21.1°C to 26.7°C), and outdoor temperature must be 70°F to 100°F (21.1°C to 37.8°C). If outside these conditions, adjust charge for long line sets by weigh-in method.

Manufacturer reserves the right to change, at any time, specifications and designs without notice and without obligations.

LONG LINE APPLICATIONS

An application is considered “Long Line” when the total equivalent tubing length exceeds 80 ft or when there is more than 35 ft. vertical separation between indoor and outdoor units. These applications require additional accessories and system modifications for reliable system operation. The maximum allowable total equivalent length is 250 ft. The maximum vertical separation is 200 ft. when outdoor unit is above indoor unit, and 80 ft. when the outdoor unit is below the indoor unit. Refer to Accessory Usage Guideline below for required accessories. See Long-Line Application Guideline for required piping and system modifications. Also, refer to table below for acceptable vapor tube diameters to minimize the cooling capacity loss.

VAPOR LINE SIZING AND COOLING CAPACITY LOSS

Acceptable vapor line diameters provide adequate oil return to the compressor while avoiding excessive capacity loss. The suction line diameters shown in the chart below are acceptable for AC systems with R-454B refrigerant:

Table 4 – Vapor Line Sizing and Cooling Capacity Losses — R-454B Refrigerant 2-Stage Air Conditioner Applications

Unit Nominal Size	Maximum Liquid Line Diameters OD (in.)	Vapor Line Diameters (In.) OD	Cooling Capacity Loss (%) Total Equivalent Line Length ft. (m)								
			26-50 (7.9-15.2)	51-80 (15.5-24.4)	81-100 (24.7-30.5)	101-125 (30.8-38.1)	126-150 (38.4-45.7)	151-175 (46.0-50.3)	176-200 (53.6-60.0)	201-225 (61.3-68.6)	226-250 (68.9-76.2)
24	3/8	5/8	0	1	1	2	3	3	4	4	5
		3/4	0	0	0	0	1	1	1	1	1
36	3/8	5/8	1	2	4	5	6	7	9	10	11
		3/4	0	0	1	1	2	2	3	3	4
		7/8	0	0	0	0	1	1	1	1	2
48	3/8	3/4	1	2	2	3	4	5	6	7	7
		7/8	0	1	1	2	2	2	3	3	3
		1-1/8	0	0	—	—	—	—	—	—	—
60	3/8	3/4	1	2	4	5	6	7	9	10	11
		7/8	0	1	2	2	3	4	4	5	5
		1-1/8	0	0	0	1	1	1	1	1	1

Applications in this area may be long line and may have height restrictions. See the Residential Piping and Long Line Guideline.

— Applications in this area are not recommended due to insufficient oil return

* Units are rated with 25 ft (7.6 m) of lineset length. See Vapor Line Sizing and Cooling Capacity Loss table when using other sizes and lengths of lineset.

AHRI RATINGS

For AHRI ratings certificates, please refer to the AHRI directory www.ahridirectory.org
Additional ratings and system combinations can be accessed via the Ratings Database here: ICP Commercial Ratings

NOTE: Any ratings contained in this document are subject to change at any time.

ELECTRICAL DATA

UNIT SIZE	V/PH	OPER VOLTS*		COMPR		FAN	MCA	MAX FUSE† or CKT BRK AMPS
		MAX	MIN	LRA	RLA	FLA		
24	208-230/1	253	197	62.0	10.3	2.60	15.5	20
36				90.0	14.6	2.60	20.9	35
48				138.0	18.3	2.60	25.5	40
60				149.0	22.3	2.60	30.5	50

* Permissible limits of the voltage range at which the unit will operate satisfactorily
† Time-Delay fuse.
FLA- Full Load Amps
LRA - Locked Rotor Amps
MCA- Minimum Circuit Amps
RLA- Rated Load Amps
NOTE: Control circuit is 24-V on all units and requires external power source. Copper wire must be used from service disconnect to unit.
All motors/compressors contain internal overload protection.

A-WEIGHTED SOUND POWER (dBA) WITHOUT ACCESSORY SOUND SHIELD

UNIT SIZE	STANDARD RATING	TYPICAL OCTAVE BAND SPECTRUM (without tone adjustment)						
		125	250	500	1000	2000	4000	8000
24	72 - High Stage	66	64	63	66	60	57	54
	72 - Low Stage	67	65	65	69	62	60	59
36	71 - High Stage	63	61	62	68	59	52	52
	69 - Low Stage	62	65	62	62	62	54	53
48	72 - High Stage	68	67	67	69	61	59	57
	72 - Low Stage	68	67	67	68	65	62	58
60	74 - High Stage	68	67	68	73	61	60	56
	72 - Low Stage	68	67	69	68	61	59	55

A-WEIGHTED SOUND POWER (dBA) WITH ACCESSORY SOUND SHIELD

UNIT SIZE	STANDARD RATING	TYPICAL OCTAVE BAND SPECTRUM (without tone adjustment)						
		125	250	500	1000	2000	4000	8000
24	71 - High Stage	65	64	62	66	60	53	50
	70 - Low Stage	66	65	64	67	60	57	55
36	69 - High Stage	63	63	61	66	57	50	48
	68 - Low Stage	61	67	62	59	59	51	48
48	71 - High Stage	67	66	67	68	60	57	54
	71 - Low Stage	67	67	67	67	63	59	55
60	73 - High Stage	67	66	67	71	60	58	54
	70 - Low Stage	68	67	68	67	59	57	52

NOTE: Tested in compliance with AHRI 270 but not listed with AHRI.

Charging Subcooling (TXV-Type Expansion Device)

UNIT SIZE	REQUIRED SUBCOOLING °F (°C)
24	8 (4.4)
36	8 (4.4)
48	11 (6.1)
60	11 (6.1)

Accessories

KIT NUMBER	KIT NAME	24	36	48	60
NASA00201FS	Evaporator Freeze Stat	X	X	X	X
NASA001TD	Time Delay Relay (90s TDR)	X	X	X	X
NASA00201TD	Time Delay Relay (30s TDR)	X	X	X	X
NASA0501LA	Low Ambient	X	X	X	X
NASA010SC	Hard Start				X
NASA012SC	Hard Start	X	X	X	
NASA002AC	Cycle Protection	X	X	X	X
NASA00201SF	Support Feet	X	X	X	X
NASA401LS	Solenoid Valve	X	X	X	X
NASA00201WS	Winter Start	X	X	X	X
NASA00601CH	Crankcase Heater	X	X		
NASA00501CH	Crankcase Heater			X	X
NASA00201SJ	Compressor Sound Blanket	X	X		
NASA00101SJ	Compressor Sound Blanket			X	X

X = Accessory / S = Standard

ACCESSORY USAGE GUIDELINE

Accessory	Required for Low Ambient Cooling Applications (Below 55°F / 12.8°C)	Required for Long Line Applications*	Required for Sea Coast Applications (within 2 miles/3.2 km)
Ball Bearing Fan Motor	Standard	Standard	Standard
Crankcase Heater	Yes (standard on some units)	Yes (standard on some units)	No
Evaporator Freeze Thermostat	Yes	No	No
Hard Shutoff TXV	Yes (standard w/factory approved indoor unit)	Yes (standard w/factory approved indoor unit)	Yes (standard w/factory approved indoor unit)
Liquid Line Solenoid Valve	No	See Residential Piping and Long Line Guideline	No
Low-Ambient Control	Yes	No	No
Winter Start Control	Yes	No	No

* For tubing line sets between 80 and 200 ft. (24.38 and 60.96 m) and/or 20 ft. (6 m) vertical differential, refer to Residential Piping and Long Line Guideline.

Accessory Description and Usage

1. Compressor Sound Blanket

Wraparound sound reducing cover for the compressor. Reduces the sound level of the compressor.

Usage Guideline:

Suggested when unit is installed closer than 15 ft (4.57 m) to quiet areas such as bedrooms, etc.

Suggested when unit is installed between two houses less than 10 ft (3 m) apart.

2. Compressor Start Assist - Capacitor and Relay

Start capacitor and relay gives a “hard” boost to compressor motor at each start up.

Usage Guideline:

Required for single-phase scroll compressors in the following applications:

Long line

Low ambient cooling

Suggested for all compressors in areas with a history of low voltage problems.

3. Cycle Protector

The cycle protector is designed to prevent compressor short cycling. This control provides an approximate 5-minute delay after power to the compressor has been interrupted for any reason, including power outage, protector control trip, thermostat jiggling, or normal cycling.

4. Crankcase Heater

An electric resistance heater which mounts to the base of the compressor to keep the lubricant warm during off cycles. Improves compressor lubrication on restart and minimizes the chance of liquid slugging.

Usage Guideline:

Required in low ambient cooling applications.

Required in long line applications.

Suggested in all commercial applications.

5. Evaporator Freeze Thermostat

An SPST temperature-actuated switch that stops unit operation when evaporator reaches freeze-up conditions.

Usage Guideline:

Required when low ambient kit has been added.

6. Liquid-Line Solenoid Valve (LLS)

An electrically operated shutoff valve which stops and starts refrigerant liquid flow in response to compressor operation. It is to be installed at the outdoor unit to control refrigerant migration during off cycle in heating mode.

Usage Guideline:

An LLS is required in all long line air conditioner applications to control refrigerant off cycle migration in heating mode. See Long Line Guideline.

Suggested for all commercial applications.

7. Low-Ambient Pressure Switch

A long life pressure switch which is mounted to outdoor unit service valve. It is designed to cycle the outdoor fan motor in order to maintain head pressure within normal operating limits. The control will maintain working head pressure at low-ambient temperatures down to 0°F (-17.8°C) when properly installed.

Usage Guideline:

A Low-Ambient Pressure Switch must be used when cooling operation is used at outdoor temperatures below 55°F (12.8°C).

8. Time Delay Relay

An SPST delay relay which briefly continues operation of indoor blower motor to provide additional cooling after the compressor cycles off.

NOTE: Most indoor unit controls include this feature. For those that do not, use the guideline below.

Usage Guideline:

For improved efficiency ratings for certain combinations of indoor and outdoor units. Refer to AHRI Directory of Certified Product Performance (AHRI Directory).

When a Time-Delay Relay (TDR) is called for in the AHRI Directory, use a 30 second TDR for MicroChannel Indoor units and use a 90 second TDR for Round Tube Plate Fin Indoor units.

9. Winter Start Control

This control is designed to alleviate nuisance opening of the low-pressure switch by bypassing it for the first 3 minutes of operation.

DIMENSIONS

UNIT	SERIES	ELECTRICAL CHARACTERISTICS				A		B		C		D		E		F		G		H		I		J		K		OPERATING WEIGHT		SHIPPING WEIGHT		SHIPPING LENGTH / WIDTH (Sq.)		SHIPPING HEIGHT	
		208-230-1-60	208/230-3-60	460-3-60	575-3-60	INCH	MM	INCH	MM	INCH	MM	INCH	MM	INCH	MM	INCH	MM	INCH	MM	INCH	MM	INCH	MM	INCH	MM	INCH	MM	Lbs	Kgs	Lbs	Kgs	INCH	MM	INCH	MM
N5A8T24**AWA	A	Y	N	N	N	31 3/16	792.5	35 1/2	901.4	3/4	19.1	6 9/16	166.1	24 11/16	626.3	9 1/8	231.3	5/16	7.9	3	76.2	15 1/8	384.2	15 1/8	384.2	14	355.6	154	69.9	175	79.4	34 1/4	870.0	39 13/16	1011.2
N5A8T36**AWA	A	Y	N	N	N	35	889.0	35 1/2	901.4	7/8	22.2	6 9/16	166.1	28 7/16	722.8	9 1/8	231.3	5/16	7.9	3	76.2	16 1/2	419.1	16 1/2	419.1	17 1/2	444.5	193	87.5	220	99.8	38	965.0	39 13/16	1011.2
N5A8T48**AWA	A	Y	N	N	N	35	889.0	35 1/2	901.4	7/8	22.2	6 9/16	166.1	28 7/16	722.8	9 1/8	231.3	5/16	7.9	3	76.2	17 3/4	450.9	16 3/4	425.5	15 1/2	393.7	234	106.1	261	118.4	38	965.0	39 13/16	1011.2
N5A8T60**AWA	A	Y	N	N	N	35	889.0	38 7/8	987.8	7/8	22.2	6 9/16	166.1	28 7/16	722.8	9 1/8	231.3	5/16	7.9	3	76.2	18	457.2	17 3/4	450.9	16 7/8	428.6	246	111.6	274	124.3	38	965.0	43 1/4	1099.0

Y=YES
N=NO

NOTES:

1. CENTER OF GRAVITY .

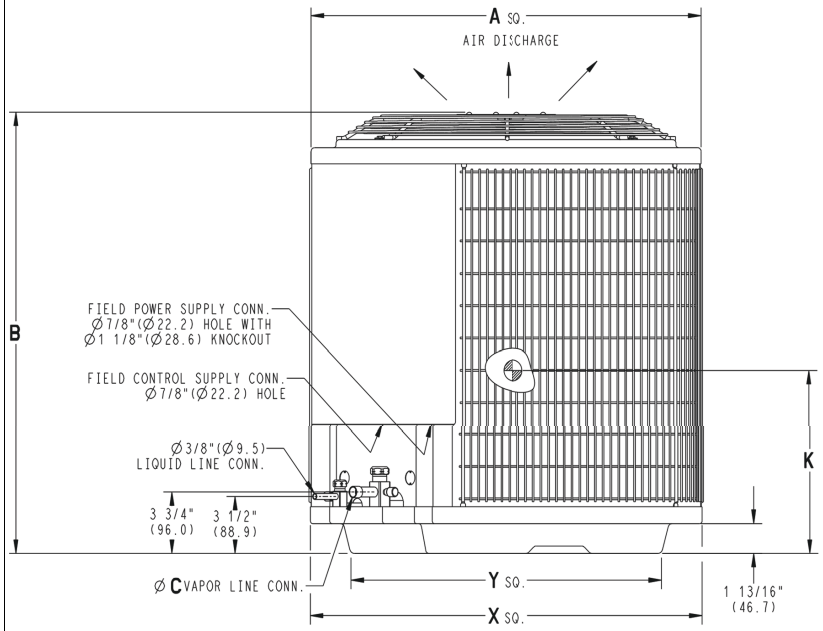

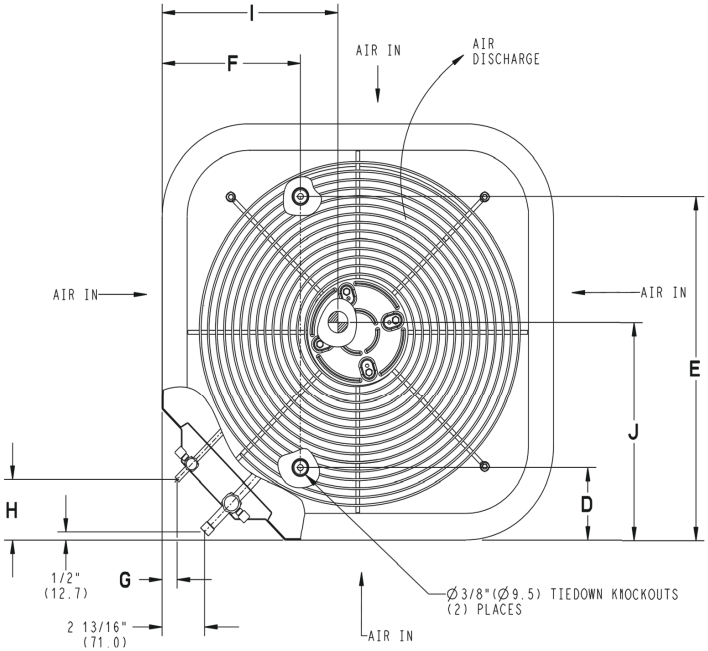

UNIT SIZE	"X" MINIMUM GROUND MOUNTING PAD APPLICATION DIMENSIONS		"Y" MINIMUM ROOF-TOP MOUNTING PAD APPLICATION DIMENSIONS	
-	23 1/8	587.3	17 7/8	454.6
-	25 3/4	654.0	20 7/16	518.5
24	31 3/16	792.5	22 15/16	583.2
36,48,60	35	889.0	26 3/4	679.7

NOTE: ALL DIMENSIONS IN INCH (MM)

U.S. ECCN: Not Subject to Regulation (N.S.R.)

SD6060-4 N5A8T CVL REV. -

Manufacturer reserves the right to change, at any time, specifications and designs without notice and without obligations.

CLEARANCES

Clearances (various examples)

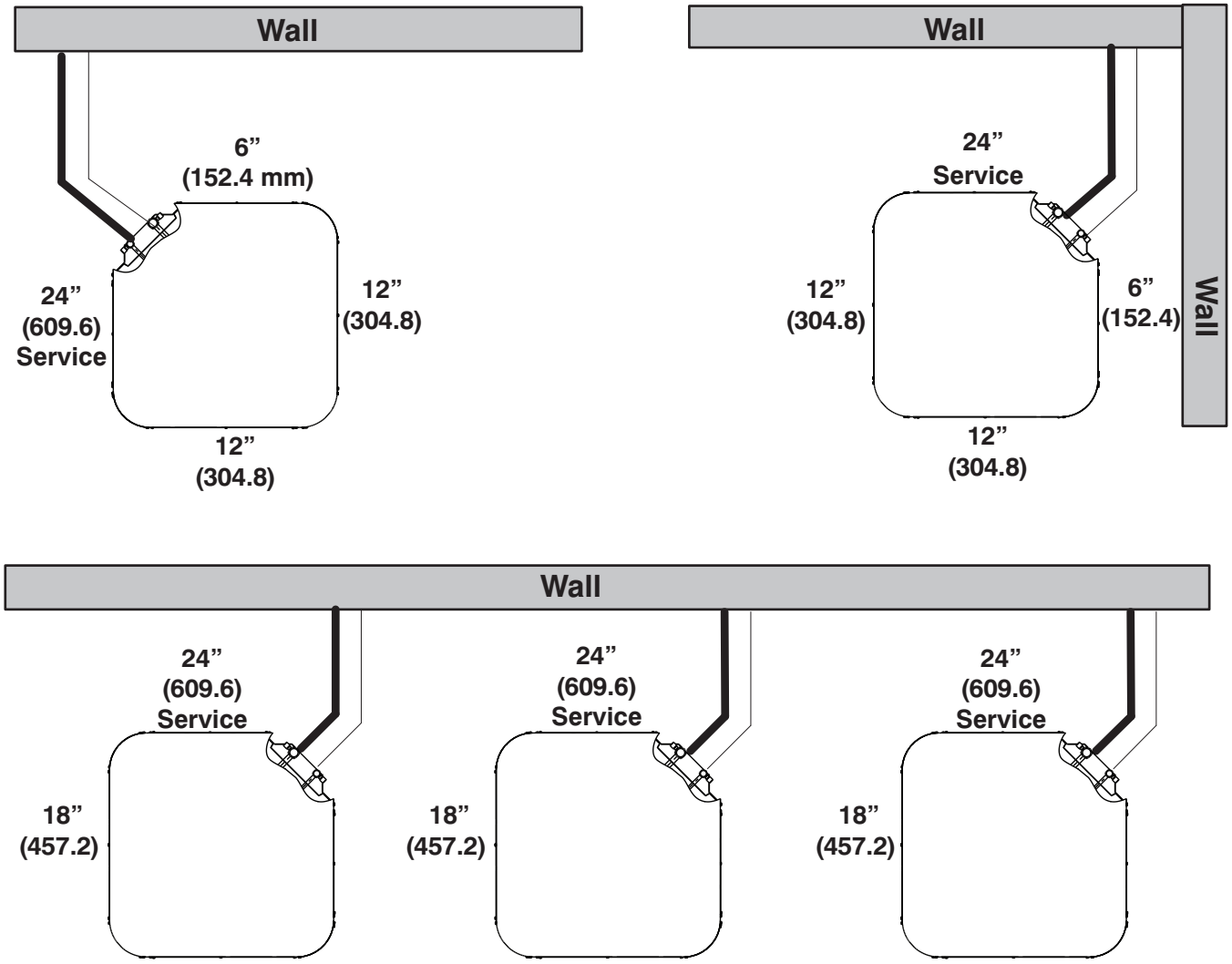

Note: Numbers in ( ) = mm
Allow 48” above unit

IMPORTANT: When installing multiple units in an alcove, roof well, or partially enclosed area, ensure there is adequate ventilation to prevent re-circulation of discharge air.

Detailed Cooling Capacities#

EVAPORATOR AIR		CONDENSER ENTERING AIR TEMPERATURES °F (°C)																	
		75.0 (23.9)			85.0 (29.4)			95.0 (35.0)			105.0 (40.6)			115.0 (46.1)			125.0 (51.7)		
CFM	EWB	Capacity MBtuh		Total Sys.	Capacity MBtuh		Total Sys.	Capacity MBtuh		Total Sys.	Capacity MBtuh		Total Sys.	Capacity MBtuh		Total Sys.	Capacity MBtuh		Total Sys.
		Total	Sens‡	KW**	Total	Sens‡	KW**	Total	Sens‡	KW**	Total	Sens‡	KW**	Total	Sens‡	KW**	Total	Sens‡	KW**
N5A8T24AKAWA Outdoor Section With EVD5X25M17A* Indoor Section - High																			
700	72.0 (22.2)	28.09	13.88	1.50	27.06	13.46	1.69	25.90	13.00	1.89	24.63	12.49	2.12	23.27	11.91	2.37	21.83	11.37	2.65
	67.0 (19.4)	25.73	16.81	1.51	24.76	16.38	1.69	23.71	15.90	1.89	22.55	15.38	2.11	21.22	14.73	2.36	19.98	14.22	2.64
	63.0 (17.2)††	23.77	16.17	1.52	22.87	15.73	1.69	21.87	15.24	1.89	20.79	14.72	2.10	19.65	14.14	2.35	18.39	13.56	2.63
	62.0 (16.7)	23.49	19.71	1.52	22.59	19.26	1.69	21.59	18.74	1.89	20.55	18.24	2.10	19.36	17.60	2.35	18.20	17.11	2.63
	57.0 (13.9)	22.57	22.57	1.52	21.81	21.81	1.69	21.04	21.04	1.88	20.15	20.15	2.10	19.24	19.24	2.35	18.21	18.21	2.63
800	72.0 (22.2)	28.73	14.38	1.54	27.64	13.94	1.73	26.43	13.46	1.94	25.13	12.91	2.17	23.72	12.39	2.42	22.20	11.78	2.70
	67.0 (19.4)	26.33	17.65	1.55	25.32	17.20	1.74	24.20	16.70	1.94	23.01	16.17	2.16	21.73	15.61	2.41	20.31	14.98	2.69
	63.0 (17.2)††	24.34	16.95	1.56	23.39	16.49	1.74	22.33	15.98	1.93	21.21	15.45	2.15	20.00	14.86	2.40	18.70	14.25	2.68
	62.0 (16.7)	24.01	20.85	1.56	23.07	20.39	1.74	22.06	19.91	1.93	20.96	19.41	2.15	19.80	18.87	2.40	18.90	18.90	2.69
	57.0 (13.9)	23.48	23.48	1.56	22.72	22.72	1.74	21.84	21.84	1.93	20.95	20.95	2.15	19.93	19.93	2.40	18.84	18.84	2.68
900	72.0 (22.2)	29.23	14.82	1.59	28.07	14.36	1.78	26.83	13.86	1.99	25.48	13.34	2.21	24.02	12.76	2.47	22.46	12.14	2.75
	67.0 (19.4)	26.80	18.42	1.60	25.74	17.95	1.78	24.58	17.43	1.98	23.33	16.90	2.21	22.00	16.30	2.46	20.55	15.68	2.74
	63.0 (17.2)††	24.78	17.66	1.61	23.77	17.16	1.79	22.69	16.66	1.98	21.51	16.09	2.20	20.26	15.46	2.45	18.91	14.87	2.73
	62.0 (16.7)	24.47	22.02	1.61	23.50	21.58	1.79	22.43	21.06	1.98	21.21	21.21	2.20	20.55	20.55	2.45	19.40	19.40	2.74
	57.0 (13.9)	24.27	24.27	1.61	23.42	23.42	1.79	22.55	22.55	1.98	21.56	21.56	2.20	20.52	20.52	2.45	19.37	19.37	2.73
N5A8T24AKAWA Outdoor Section With EVD5X25M17A* Indoor Section - Low																			
520	72.0 (22.2)	19.86	9.66	0.94	19.09	9.33	1.05	18.33	8.99	1.17	17.32	8.61	1.29	16.31	8.20	1.42	15.20	7.75	1.55
	67.0 (19.4)	18.11	11.73	0.96	17.43	11.42	1.07	16.63	11.03	1.19	15.80	10.66	1.31	14.83	10.21	1.43	13.68	9.65	1.57
	63.0 (17.2)††	16.67	11.23	0.98	16.03	10.90	1.09	15.30	10.54	1.20	14.47	10.11	1.32	13.55	9.66	1.45	12.50	9.13	1.58
	62.0 (16.7)	16.48	13.80	0.98	15.82	13.42	1.09	15.12	13.08	1.21	14.33	12.70	1.32	13.43	12.26	1.45	12.61	12.61	1.58
	57.0 (13.9)	15.87	15.87	0.99	15.35	15.35	1.10	14.81	14.81	1.21	14.08	14.08	1.33	13.41	13.41	1.45	12.59	12.59	1.58
600	72.0 (22.2)	20.37	10.07	0.96	19.57	9.74	1.07	18.65	9.37	1.19	17.72	8.95	1.31	16.65	8.56	1.44	15.42	7.99	1.57
	67.0 (19.4)	18.62	12.43	0.98	17.88	12.10	1.09	17.01	11.68	1.21	16.15	11.32	1.33	15.16	10.88	1.45	14.06	10.37	1.59
	63.0 (17.2)††	17.14	11.87	1.00	16.43	11.52	1.11	15.67	11.15	1.22	14.82	10.73	1.34	13.86	10.26	1.47	12.61	9.44	1.60
	62.0 (16.7)	16.93	14.79	1.00	16.24	14.40	1.11	15.51	14.11	1.23	14.61	14.61	1.35	14.01	14.01	1.47	13.14	13.14	1.60
	57.0 (13.9)	16.62	16.62	1.01	16.11	16.11	1.11	15.47	15.47	1.23	14.77	14.77	1.34	13.93	13.93	1.47	13.16	13.16	1.60
680	72.0 (22.2)	20.79	10.45	0.98	19.92	10.10	1.09	18.99	9.72	1.21	17.99	9.27	1.33	16.91	8.88	1.46	15.73	8.41	1.59
	67.0 (19.4)	18.99	13.08	1.00	18.19	12.70	1.11	17.36	12.34	1.23	16.41	11.90	1.35	15.32	11.32	1.47	14.27	10.97	1.61
	63.0 (17.2)††	17.47	12.44	1.02	16.76	12.11	1.13	15.95	11.69	1.25	15.00	11.21	1.37	14.09	10.81	1.49	13.00	10.29	1.62
	62.0 (16.7)	17.29	15.73	1.02	16.60	15.52	1.13	15.79	15.79	1.25	15.35	15.35	1.36	14.52	14.52	1.48	13.57	13.57	1.61
	57.0 (13.9)	17.30	17.30	1.02	16.69	16.69	1.13	16.06	16.06	1.24	15.32	15.32	1.36	14.50	14.50	1.48	13.55	13.55	1.61

Manufacturer reserves the right to change, at any time, specifications and designs without notice and without obligations.

Detailed Cooling Capacities# (Continued)

EVAPORATOR AIR		CONDENSER ENTERING AIR TEMPERATURES °F (°C)																	
		75.0 (23.9)			85.0 (29.4)			95.0 (35.0)			105.0 (40.6)			115.0 (46.1)			125.0 (51.7)		
CFM	EWB	Capacity MBtuh		Total Sys.	Capacity MBtuh		Total Sys.	Capacity MBtuh		Total Sys.	Capacity MBtuh		Total Sys.	Capacity MBtuh		Total Sys.	Capacity MBtuh		Total Sys.
		Total	Sens‡	KW**	Total	Sens‡	KW**	Total	Sens‡	KW**	Total	Sens‡	KW**	Total	Sens‡	KW**	Total	Sens‡	KW**
N5A8T36AKAWA Outdoor Section With EVD5X37M21A* Indoor Section - High																			
1050	72.0 (22.2)	43.74	21.47	2.43	41.91	20.76	2.65	39.94	20.00	2.91	37.77	19.18	3.21	35.35	18.27	3.56	31.95	16.99	3.95
	67.0 (19.4)	39.82	26.05	2.42	38.18	25.33	2.64	36.41	24.56	2.90	34.46	23.72	3.20	32.32	22.80	3.55	30.04	21.80	3.96
	63.0 (17.2)††	36.88	25.15	2.40	35.37	24.44	2.63	33.72	23.66	2.89	31.94	22.83	3.19	29.98	21.93	3.54	27.82	20.96	3.96
	62.0 (16.7)	36.21	30.51	2.40	34.73	29.79	2.63	33.13	29.03	2.89	31.39	28.20	3.19	29.47	27.33	3.54	27.27	27.27	3.95
	57.0 (13.9)	34.90	34.90	2.40	33.73	33.73	2.63	32.47	32.47	2.89	31.07	31.07	3.19	29.22	29.22	3.53	27.71	27.71	3.96
1175	72.0 (22.2)	44.54	22.15	2.49	42.64	21.43	2.71	40.58	20.64	2.97	38.32	19.80	3.27	35.82	18.87	3.61	32.31	17.56	4.01
	67.0 (19.4)	40.57	27.14	2.48	38.85	26.39	2.70	37.00	25.60	2.96	34.97	24.74	3.26	32.69	23.72	3.61	30.30	22.74	4.02
	63.0 (17.2)††	37.58	26.17	2.47	36.00	25.43	2.69	34.28	24.62	2.95	32.42	23.78	3.25	30.37	22.86	3.60	28.16	21.88	4.02
	62.0 (16.7)	36.90	32.03	2.46	35.35	31.30	2.69	33.68	30.52	2.95	31.87	29.70	3.25	30.85	28.33	3.60	28.46	28.46	4.02
	57.0 (13.9)	36.09	36.09	2.46	34.85	34.85	2.69	33.50	33.50	2.95	32.00	32.00	3.25	30.30	30.30	3.60	28.43	28.43	4.02
1350	72.0 (22.2)	45.42	23.00	2.58	43.43	22.26	2.80	41.26	21.45	3.05	38.88	20.57	3.35	35.68	19.38	3.69	32.65	18.28	4.09
	67.0 (19.4)	41.37	28.53	2.56	39.57	27.77	2.79	37.62	26.95	3.04	35.48	26.07	3.34	32.58	24.86	3.68	30.58	24.09	4.10
	63.0 (17.2)††	38.33	27.47	2.55	36.65	26.69	2.78	34.86	25.87	3.04	32.91	25.00	3.34	30.76	24.07	3.69	28.42	23.05	4.10
	62.0 (16.7)	37.64	34.04	2.55	36.02	33.32	2.78	34.29	32.57	3.04	33.07	33.07	3.34	31.26	31.26	3.69	29.27	29.27	4.10
	57.0 (13.9)	37.48	37.48	2.55	36.15	36.15	2.78	34.68	34.68	3.04	33.04	33.04	3.34	30.84	30.84	3.68	28.80	28.80	4.09
N5A8T36AKAWA Outdoor Section With EVD5X37M21A* Indoor Section - Low																			
760	72.0 (22.2)	30.22	14.77	1.51	28.98	14.33	1.69	27.62	13.85	1.88	25.68	13.15	2.07	24.13	12.61	2.28	22.35	11.97	2.50
	67.0 (19.4)	27.50	17.93	1.53	26.40	17.52	1.71	24.86	16.88	1.89	23.37	16.28	2.09	22.43	16.00	2.30	20.74	15.32	2.53
	63.0 (17.2)††	25.36	17.23	1.55	24.37	16.82	1.73	23.26	16.35	1.91	26.84	17.90	1.55	20.66	15.28	2.32	19.10	14.58	2.55
	62.0 (16.7)	24.93	20.99	1.56	23.96	20.61	1.73	22.44	19.88	1.91	21.68	19.71	2.11	20.39	19.28	2.33	18.91	18.91	2.55
	57.0 (13.9)	24.07	24.07	1.57	23.33	23.33	1.74	22.46	22.46	1.92	21.21	21.21	2.11	20.43	20.43	2.32	19.19	19.19	2.55
880	72.0 (22.2)	31.04	15.45	1.54	29.69	14.98	1.73	27.80	14.32	1.91	26.20	13.76	2.10	24.39	13.14	2.31	22.73	12.56	2.53
	67.0 (19.4)	28.24	19.03	1.56	27.04	18.56	1.74	25.76	18.09	1.93	24.36	17.57	2.13	22.81	17.00	2.34	21.10	16.33	2.56
	63.0 (17.2)††	26.06	18.25	1.59	24.97	17.79	1.76	23.81	17.33	1.95	22.48	16.77	2.14	20.99	16.14	2.35	19.47	15.56	2.58
	62.0 (16.7)	25.62	22.54	1.59	24.56	22.11	1.77	23.04	21.48	1.95	22.17	22.17	2.15	20.81	20.81	2.34	19.99	19.99	2.57
	57.0 (13.9)	25.28	25.28	1.59	24.42	24.42	1.77	23.07	23.07	1.94	22.47	22.47	2.14	21.28	21.28	2.35	19.64	19.64	2.57
1000	72.0 (22.2)	31.66	16.06	1.58	30.22	15.57	1.76	28.25	14.88	1.95	26.58	14.31	2.14	25.31	13.90	2.35	23.01	13.08	2.57
	67.0 (19.4)	28.79	20.00	1.60	27.53	19.54	1.78	26.19	19.06	1.97	24.15	18.23	2.16	23.10	17.95	2.37	21.33	17.28	2.59
	63.0 (17.2)††	26.56	19.14	1.62	25.44	18.70	1.80	24.21	18.23	1.98	22.38	17.36	2.17	21.35	17.08	2.39	19.63	16.33	2.61
	62.0 (16.7)	26.14	23.97	1.63	25.11	23.70	1.80	24.36	24.36	1.98	22.73	22.73	2.17	21.98	21.98	2.38	20.56	20.56	2.60
	57.0 (13.9)	26.21	26.21	1.63	25.32	25.32	1.80	23.87	23.87	1.98	23.19	23.19	2.17	21.95	21.95	2.38	20.54	20.54	2.60

Manufacturer reserves the right to change, at any time, specifications and designs without notice and without obligations.

Detailed Cooling Capacities# (Continued)

EVAPORATOR AIR		CONDENSER ENTERING AIR TEMPERATURES °F (°C)																	
		75.0 (23.9)			85.0 (29.4)			95.0 (35.0)			105.0 (40.6)			115.0 (46.1)			125.0 (51.7)		
CFM	EWB	Capacity MBtuh		Total Sys.	Capacity MBtuh		Total Sys.	Capacity MBtuh		Total Sys.	Capacity MBtuh		Total Sys.	Capacity MBtuh		Total Sys.	Capacity MBtuh		Total Sys.
		Total	Sens‡	KW**	Total	Sens‡	KW**	Total	Sens‡	KW**	Total	Sens‡	KW**	Total	Sens‡	KW**	Total	Sens‡	KW**
N5A8T48AKAWA Outdoor Section With EVD5X49M24A* Indoor Section - High																			
1400	72.0 (22.2)	58.00	28.76	3.24	55.89	27.93	3.53	53.58	27.04	3.89	51.09	26.09	4.31	48.36	25.04	4.79	45.37	23.93	5.33
	67.0 (19.4)	52.57	34.89	3.20	50.63	34.02	3.50	48.50	33.08	3.86	46.21	32.08	4.28	43.64	30.99	4.77	41.03	29.88	5.30
	63.0 (17.2)††	48.53	33.59	3.17	46.70	32.72	3.47	44.71	31.77	3.84	42.56	30.77	4.27	40.25	29.70	4.75	37.75	28.56	5.29
	62.0 (16.7)	47.58	40.76	3.17	45.77	39.87	3.47	43.82	38.92	3.83	41.71	37.92	4.26	39.44	36.84	4.75	37.06	35.86	5.29
	57.0 (13.9)	45.93	45.93	3.16	44.51	44.51	3.46	42.96	42.96	3.83	41.29	41.29	4.26	39.41	39.41	4.75	37.48	37.48	5.29
1600	72.0 (22.2)	59.33	29.89	3.35	57.11	29.04	3.64	54.68	28.11	3.99	52.06	27.13	4.41	49.23	26.07	4.89	46.14	24.92	5.43
	67.0 (19.4)	53.77	36.64	3.31	51.73	35.76	3.60	49.50	34.80	3.96	47.07	33.80	4.38	44.48	32.68	4.87	41.68	31.51	5.40
	63.0 (17.2)††	49.65	35.23	3.28	47.73	34.35	3.57	45.64	33.37	3.94	43.38	32.34	4.36	40.95	31.25	4.85	38.35	30.07	5.39
	62.0 (16.7)	48.65	43.19	3.27	46.76	42.30	3.57	44.71	41.32	3.93	42.54	40.38	4.36	40.97	40.97	4.85	38.81	38.81	5.39
	57.0 (13.9)	47.81	47.81	3.27	46.30	46.30	3.57	44.66	44.66	3.93	42.86	42.86	4.36	40.83	40.83	4.85	38.79	38.79	5.39
1800	72.0 (22.2)	60.36	30.90	3.46	58.05	30.02	3.74	55.53	29.08	4.10	52.81	28.07	4.51	49.86	26.98	4.99	46.70	25.83	5.53
	67.0 (19.4)	54.69	38.26	3.41	52.57	37.36	3.70	50.25	36.38	4.06	47.75	35.34	4.48	45.05	34.23	4.96	42.14	33.02	5.50
	63.0 (17.2)††	50.51	36.74	3.38	48.51	35.83	3.67	46.34	34.84	4.04	44.00	33.78	4.46	41.48	32.65	4.95	38.77	31.46	5.48
	62.0 (16.7)	49.51	45.48	3.37	47.54	44.57	3.67	45.43	43.63	4.03	44.21	44.21	4.46	42.14	42.14	4.95	39.88	39.88	5.49
	57.0 (13.9)	49.40	49.40	3.37	47.80	47.80	3.67	46.06	46.06	4.04	44.08	44.08	4.46	41.97	41.97	4.95	39.84	39.84	5.49
N5A8T48AKAWA Outdoor Section With EVD5X49M24A* Indoor Section - Low																			
1040	72.0 (22.2)	42.50	21.31	1.98	40.46	20.43	2.20	38.38	19.54	2.46	36.10	18.60	2.73	33.68	17.62	3.04	31.15	16.60	3.38
	67.0 (19.4)	38.36	25.91	2.01	36.49	24.96	2.24	34.30	23.98	2.49	32.21	22.86	2.76	29.77	21.72	3.07	38.12	25.69	2.10
	63.0 (17.2)††	35.16	24.78	2.04	33.41	23.84	2.26	31.40	22.80	2.51	29.18	21.65	2.79	26.61	20.27	3.09	24.25	19.25	3.43
	62.0 (16.7)	34.44	30.30	2.05	32.72	29.31	2.27	30.75	28.23	2.52	28.65	27.21	2.79	26.97	26.97	3.09	25.01	25.01	3.42
	57.0 (13.9)	33.58	33.58	2.05	32.16	32.16	2.27	30.62	30.62	2.52	28.91	28.91	2.79	26.95	26.95	3.09	24.90	24.89	3.43
1200	72.0 (22.2)	43.58	22.30	2.02	41.47	21.40	2.25	39.27	20.48	2.50	36.98	19.53	2.78	34.52	18.53	3.08	31.88	17.47	3.42
	67.0 (19.4)	39.39	27.50	2.06	37.41	26.50	2.28	35.26	25.45	2.53	32.93	24.30	2.81	30.52	23.20	3.11	27.92	21.99	3.45
	63.0 (17.2)††	36.13	26.27	2.09	34.28	25.30	2.31	32.26	24.18	2.56	29.91	23.04	2.83	27.35	21.76	3.14	24.79	20.54	3.48
	62.0 (16.7)	35.39	32.50	2.09	33.62	31.56	2.31	31.78	30.34	2.56	30.30	30.30	2.83	28.32	28.32	3.13	26.40	26.40	3.46
	57.0 (13.9)	35.22	35.22	2.09	33.74	33.74	2.31	32.08	32.08	2.56	30.26	30.26	2.83	28.27	28.27	3.13	26.36	26.36	3.46
1360	72.0 (22.2)	44.42	23.19	2.07	42.25	22.27	2.29	39.99	21.33	2.55	37.66	20.37	2.82	35.14	19.35	3.13	32.53	18.26	3.47
	67.0 (19.4)	40.17	28.95	2.10	38.11	27.92	2.33	35.72	26.78	2.58	33.56	25.72	2.85	30.89	24.62	3.17	38.12	25.69	2.10
	63.0 (17.2)††	36.87	27.64	2.13	34.94	26.62	2.36	32.78	25.49	2.61	30.46	24.33	2.88	27.97	23.13	3.18	25.31	21.85	3.52
	62.0 (16.7)	36.20	34.67	2.14	35.09	35.09	2.35	33.18	33.18	2.60	31.42	31.42	2.87	29.43	29.43	3.17	27.39	27.39	3.50
	57.0 (13.9)	36.61	36.61	2.13	35.04	35.04	2.35	33.30	33.30	2.60	31.40	31.40	2.87	29.41	29.41	3.17	27.39	27.39	3.50

Manufacturer reserves the right to change, at any time, specifications and designs without notice and without obligations.

Detailed Cooling Capacities# (Continued)

EVAPORATOR AIR		CONDENSER ENTERING AIR TEMPERATURES °F (°C)																	
		75.0 (23.9)			85.0 (29.4)			95.0 (35.0)			105.0 (40.6)			115.0 (46.1)			125.0 (51.7)		
CFM	EWB	Capacity MBtuh		Total Sys.	Capacity MBtuh		Total Sys.	Capacity MBtuh		Total Sys.	Capacity MBtuh		Total Sys.	Capacity MBtuh		Total Sys.	Capacity MBtuh		Total Sys.
		Total	Sens‡	KW**	Total	Sens‡	KW**	Total	Sens‡	KW**	Total	Sens‡	KW**	Total	Sens‡	KW**	Total	Sens‡	KW**
N5A8T60AKAWA Outdoor Section With EVD5X61M24A* Indoor Section - High																			
1750	72.0 (22.2)	69.64	34.99	4.11	66.84	33.89	4.50	63.84	32.74	4.96	60.57	31.51	5.48	57.08	30.18	6.09	53.25	28.75	6.79
	67.0 (19.4)	63.17	42.67	4.07	60.63	41.55	4.46	57.91	40.36	4.91	54.96	39.08	5.43	51.74	37.71	6.03	48.23	36.22	6.72
	63.0 (17.2)††	58.40	41.11	4.04	56.03	39.98	4.43	53.49	38.79	4.88	50.76	37.51	5.39	47.74	36.13	5.99	44.46	34.63	6.67
	62.0 (16.7)	57.30	50.13	4.03	54.96	49.01	4.42	52.47	47.77	4.87	49.76	46.48	5.38	46.82	45.12	5.98	44.64	44.64	6.68
	57.0 (13.9)	55.69	55.69	4.02	53.84	53.84	4.42	51.86	51.86	4.87	49.58	49.58	5.38	47.23	47.23	5.98	44.58	44.58	6.68
2000	72.0 (22.2)	71.12	36.39	4.25	68.17	35.26	4.64	65.04	34.08	5.09	61.66	32.81	5.62	57.97	31.45	6.22	54.01	29.98	6.93
	67.0 (19.4)	64.53	44.88	4.20	61.86	43.72	4.59	59.00	42.50	5.04	55.91	41.19	5.56	52.56	39.79	6.17	48.89	38.27	6.86
	63.0 (17.2)††	59.66	43.15	4.17	57.17	41.99	4.56	54.50	40.77	5.01	51.57	39.41	5.52	48.50	38.04	6.12	45.02	36.45	6.80
	62.0 (16.7)	58.51	53.19	4.16	56.06	52.01	4.55	53.47	50.83	5.00	50.93	50.93	5.52	48.94	48.94	6.13	46.10	46.10	6.82
	57.0 (13.9)	57.91	57.91	4.16	55.94	55.94	4.55	53.80	53.80	5.00	51.46	51.46	5.52	48.86	48.86	6.13	46.05	46.05	6.82
2250	72.0 (22.2)	72.26	37.64	4.38	69.21	36.50	4.77	65.96	35.28	5.22	62.42	33.98	5.75	58.67	32.59	6.36	54.51	31.08	7.06
	67.0 (19.4)	65.56	46.91	4.33	62.78	45.74	4.72	59.81	44.49	5.17	56.62	43.16	5.70	53.13	41.72	6.30	59.00	42.50	5.04
	63.0 (17.2)††	60.61	45.03	4.30	58.02	43.85	4.69	55.25	42.60	5.14	52.27	41.26	5.65	49.02	39.82	6.25	45.48	38.25	6.94
	62.0 (16.7)	59.44	56.05	4.29	56.89	54.87	4.68	55.47	55.47	5.14	52.98	52.98	5.66	50.27	50.27	6.27	47.30	47.30	6.97
	57.0 (13.9)	59.77	59.77	4.30	57.67	57.67	4.69	55.40	55.40	5.14	52.92	52.92	5.66	50.19	50.19	6.27	47.26	47.26	6.96
N5A8T60AKAWA Outdoor Section With EVD5X61M24A* Indoor Section - Low																			
1300	72.0 (22.2)	50.73	25.77	2.48	48.68	24.86	2.77	46.38	23.88	3.09	43.85	22.82	3.44	40.90	21.65	3.82	37.54	20.35	4.23
	67.0 (19.4)	45.78	31.61	2.51	43.88	30.64	2.81	41.76	29.61	3.13	39.37	28.48	3.47	36.65	27.24	3.84	33.57	25.90	4.25
	63.0 (17.2)††	42.09	30.26	2.55	40.28	29.28	2.84	38.27	28.24	3.15	36.01	27.10	3.50	33.20	25.53	3.87	45.53	32.15	2.51
	62.0 (16.7)	41.30	37.38	2.55	39.51	36.37	2.84	37.55	35.32	3.16	35.21	35.21	3.50	33.91	33.91	3.86	31.56	31.56	4.26
	57.0 (13.9)	40.74	40.74	2.56	39.26	39.26	2.85	37.69	37.69	3.16	35.89	35.89	3.50	33.86	33.86	3.86	31.52	31.52	4.26
1500	72.0 (22.2)	51.99	27.03	2.54	49.83	26.09	2.84	47.44	25.10	3.16	44.77	24.00	3.51	41.74	22.79	3.88	38.22	21.44	4.29
	67.0 (19.4)	46.90	33.60	2.57	44.90	32.60	2.87	42.68	31.54	3.19	40.18	30.38	3.53	37.30	29.01	3.90	34.09	27.65	4.31
	63.0 (17.2)††	43.11	32.10	2.61	41.21	31.10	2.90	39.12	30.02	3.21	36.75	28.85	3.56	33.79	27.23	3.93	45.53	32.15	2.51
	62.0 (16.7)	42.31	40.21	2.61	41.17	41.17	2.90	38.51	38.51	3.22	37.57	37.57	3.55	35.39	35.39	3.92	32.87	32.87	4.32
	57.0 (13.9)	42.66	42.66	2.61	41.12	41.12	2.90	39.40	39.40	3.21	37.45	37.45	3.55	35.26	35.26	3.92	32.71	32.71	4.32
1700	72.0 (22.2)	52.93	28.17	2.60	50.71	27.21	2.90	48.25	26.19	3.22	45.46	24.99	3.57	42.27	23.80	3.94	38.71	22.43	4.35
	67.0 (19.4)	47.75	35.44	2.64	45.67	34.42	2.93	43.37	33.33	3.25	40.78	32.14	3.59	45.53	32.32	2.57	34.49	29.36	4.37
	63.0 (17.2)††	43.88	33.81	2.67	41.91	32.78	2.96	39.58	31.46	3.28	45.52	32.50	2.63	34.53	29.17	3.99	31.32	27.76	4.40
	62.0 (16.7)	44.23	44.23	2.67	42.62	42.62	2.96	40.65	40.65	3.27	38.80	38.80	3.61	36.42	36.42	3.97	34.01	34.01	4.36
	57.0 (13.9)	44.17	44.17	2.67	42.57	42.57	2.96	40.53	40.53	3.27	38.75	38.75	3.61	36.37	36.37	3.97	33.89	33.89	4.37

† Total and sensible capacities are net capacities. Blower motor heat has been subtracted.
‡ Sensible capacities shown are based on 80°F (27°C) entering air at the indoor coil. For sensible capacities at other than 80°F (27°C), deduct 835 Btuh
(245 kW) per 1000 CFM (480 L/S) of indoor coil air for each degree below 80°F (27°C), or add 835 Btuh (245 kW) per 1000 CFM (480 L/S) of indoor coil air per degree above 80°F (27°C).
Detailed cooling capacities are based on indoor and outdoor unit at the same elevation per AHRI standard 210/240-2020. If additional tubing length and/or indoor unit is located above outdoor unit, a slight variation in capacity may occur.
** System kw is total of indoor and outdoor unit kilowatts.
At TVA rating indoor condition (75°F edb/63°F ewb). All other indoor air temperatures are at 80°F edb.
EWB — Entering Wet Bulb
NOTE: When the required data fall between the published data, interpolation may be performed. Extrapolation is not an acceptable practice.

Manufacturer reserves the right to change, at any time, specifications and designs without notice and without obligations.

Condenser Only Ratings*

SST °F (°C)		CONDENSER ENTERING AIR TEMPERATURES °F (°C)						
		55.0 (12.8)	65.0 (18.3)	75.0 (23.9)	85.0 (29.4)	95.0 (35.0)	105.0 (40.6)	115.0 (46.1)
N5A8T24AKAWA - High								
30.0 (-1.1)	TCG	19.99	19.13	18.21	17.23	16.24	15.15	14.05
	SDT	67.60	77.31	86.93	96.55	105.96	115.63	125.05
	KW	0.92	1.06	1.21	1.37	1.55	1.76	2.00
35.0 (1.7)	TCG	22.03	21.12	20.13	19.07	17.99	16.83	15.55
	SDT	68.61	78.21	87.84	97.46	106.85	116.40	125.46
	KW	0.91	1.06	1.21	1.38	1.56	1.77	2.00
40.0 (4.4)	TCG	24.23	23.25	22.19	21.05	19.86	18.62	17.24
	SDT	69.57	79.20	88.83	98.40	107.85	117.25	126.31
	KW	0.90	1.05	1.21	1.38	1.57	1.78	2.01
45.0 (7.2)	TCG	26.58	25.54	24.39	23.18	21.88	20.53	19.07
	SDT	70.65	80.25	89.86	99.35	108.83	118.20	127.05
	KW	0.88	1.04	1.21	1.38	1.58	1.79	2.02
50.0 (10.0)	TCG	29.09	27.98	26.77	25.44	24.06	22.59	21.04
	SDT	71.81	81.41	90.82	100.40	109.78	119.15	128.09
	KW	0.86	1.03	1.20	1.39	1.58	1.80	2.04
55.0 (12.8)	TCG	31.78	30.59	29.27	27.86	26.37	24.79	23.15
	SDT	73.00	82.57	92.08	101.52	110.87	120.15	129.25
	KW	0.84	1.02	1.20	1.39	1.59	1.81	2.06
N5A8T24AKAWA - Low								
30.0 (-1.1)	TCG	13.05	12.75	12.34	11.79	11.10	10.26	9.27
	SDT	64.12	73.97	83.74	93.49	103.12	112.67	122.09
	KW	0.65	0.76	0.86	0.97	1.08	1.20	1.33
35.0 (1.7)	TCG	14.60	14.22	13.75	13.16	12.36	11.57	10.59
	SDT	64.86	74.64	84.42	94.08	103.28	113.28	122.62
	KW	0.63	0.73	0.84	0.95	1.06	1.19	1.31
40.0 (4.4)	TCG	16.27	15.80	15.26	14.62	13.85	12.98	11.95
	SDT	65.61	75.40	85.12	94.79	104.19	113.88	123.25
	KW	0.60	0.71	0.82	0.93	1.04	1.17	1.30
45.0 (7.2)	TCG	18.07	17.51	16.88	16.19	15.39	14.44	13.40
	SDT	66.46	76.18	85.93	95.51	105.05	114.63	123.93
	KW	0.57	0.68	0.80	0.91	1.03	1.16	1.28
50.0 (10.0)	TCG	19.99	19.34	18.64	17.86	17.00	16.04	14.88
	SDT	67.37	77.02	86.65	96.27	105.80	115.27	124.20
	KW	0.53	0.66	0.77	0.89	1.01	1.14	1.26
55.0 (12.8)	TCG	22.05	21.30	20.50	19.67	18.74	17.72	16.51
	SDT	68.38	77.91	87.50	97.00	106.54	116.00	124.83
	KW	0.50	0.63	0.75	0.87	0.99	1.12	1.24

Manufacturer reserves the right to change, at any time, specifications and designs without notice and without obligations.

Condenser Only Ratings* (Continued)

SST °F (°C)		CONDENSER ENTERING AIR TEMPERATURES °F (°C)						
		55.0 (12.8)	65.0 (18.3)	75.0 (23.9)	85.0 (29.4)	95.0 (35.0)	105.0 (40.6)	115.0 (46.1)
N5A8T36AKAWA - High								
30.0 (-1.1)	TCG	30.55	29.00	27.56	26.10	24.58	23.00	21.34
	SDT	67.32	76.75	86.28	95.80	105.30	114.78	124.24
	KW	1.47	1.68	1.90	2.13	2.39	2.69	3.05
35.0 (1.7)	TCG	33.60	31.99	30.41	28.80	27.16	25.45	23.63
	SDT	68.39	77.83	87.29	96.75	106.23	115.65	125.05
	KW	1.49	1.70	1.91	2.14	2.40	2.71	3.06
40.0 (4.4)	TCG	36.93	35.15	33.46	31.73	29.96	28.09	26.10
	SDT	69.66	78.95	88.37	97.79	107.20	116.59	125.92
	KW	1.52	1.71	1.92	2.15	2.41	2.72	3.08
45.0 (7.2)	TCG	40.43	38.61	36.73	34.89	32.96	30.88	28.73
	SDT	70.90	80.23	89.53	98.93	108.28	117.59	126.86
	KW	1.53	1.73	1.94	2.17	2.43	2.73	3.09
50.0 (10.0)	TCG	44.24	42.22	40.27	38.24	36.11	33.90	31.53
	SDT	72.31	81.50	90.82	100.12	109.39	118.64	127.85
	KW	1.56	1.74	1.95	2.18	2.44	2.74	3.10
55.0 (12.8)	TCG	48.33	46.14	44.01	41.82	39.53	37.09	34.51
	SDT	73.84	82.93	92.17	101.40	110.62	119.77	128.90
	KW	1.55	1.76	1.97	2.19	2.45	2.75	3.11
N5A8T36AKAWA - Low								
30.0 (-1.1)	TCG	19.29	18.77	18.17	17.38	16.43	15.27	13.89
	SDT	63.46	73.21	82.96	92.58	102.25	111.82	121.31
	KW	1.08	1.24	1.40	1.56	1.75	1.94	2.16
35.0 (1.7)	TCG	21.58	20.93	20.20	19.37	18.38	17.17	15.78
	SDT	64.30	73.97	83.65	93.29	102.93	112.46	121.95
	KW	1.04	1.20	1.37	1.54	1.72	1.92	2.13
40.0 (4.4)	TCG	24.06	23.27	22.44	21.49	20.41	19.18	17.76
	SDT	65.20	74.81	84.45	94.06	103.63	113.14	122.61
	KW	0.99	1.16	1.34	1.51	1.69	1.89	2.10
45.0 (7.2)	TCG	26.77	25.79	24.82	23.78	22.62	21.34	19.85
	SDT	66.19	75.71	85.27	94.84	104.37	113.88	123.31
	KW	0.94	1.12	1.30	1.48	1.67	1.86	2.07
50.0 (10.0)	TCG	29.67	28.51	27.37	26.21	24.92	23.57	22.03
	SDT	67.26	76.70	86.18	95.69	105.16	114.64	124.05
	KW	0.89	1.09	1.27	1.46	1.64	1.84	2.05
55.0 (12.8)	TCG	32.75	31.40	30.10	28.79	27.42	25.93	24.31
	SDT	68.39	77.74	87.16	96.61	106.05	115.45	124.81
	KW	0.85	1.05	1.25	1.44	1.63	1.82	2.02

Manufacturer reserves the right to change, at any time, specifications and designs without notice and without obligations.

Condenser Only Ratings* (Continued)

SST °F (°C)		CONDENSER ENTERING AIR TEMPERATURES °F (°C)						
		55.0 (12.8)	65.0 (18.3)	75.0 (23.9)	85.0 (29.4)	95.0 (35.0)	105.0 (40.6)	115.0 (46.1)
N5A8T48AKAWA - High								
30.0 (-1.1)	TCG	39.86	38.04	36.16	34.19	32.14	30.04	27.88
	SDT	68.14	77.57	87.04	96.53	106.05	115.61	125.16
	KW	2.06	2.23	2.48	2.79	3.17	3.61	4.09
35.0 (1.7)	TCG	43.93	42.04	40.04	37.94	35.75	33.47	31.11
	SDT	69.28	78.66	88.09	97.53	107.04	116.53	126.02
	KW	2.10	2.26	2.50	2.81	3.18	3.61	4.10
40.0 (4.4)	TCG	48.29	46.32	44.21	41.98	39.63	37.15	34.57
	SDT	70.52	79.83	89.21	98.61	108.10	117.50	126.95
	KW	2.14	2.29	2.52	2.82	3.20	3.63	4.12
45.0 (7.2)	TCG	52.96	50.90	48.67	46.30	43.77	41.10	38.31
	SDT	71.79	81.08	90.41	99.77	109.19	118.57	127.99
	KW	2.18	2.32	2.55	2.85	3.22	3.64	4.13
50.0 (10.0)	TCG	57.97	55.81	53.45	50.90	48.18	45.31	42.29
	SDT	73.20	82.45	91.74	101.00	110.39	119.73	129.08
	KW	2.15	2.38	2.59	2.88	3.24	3.67	4.15
55.0 (12.8)	TCG	63.29	61.03	58.51	55.79	52.88	49.78	46.51
	SDT	74.68	83.90	93.10	102.36	111.69	120.96	130.24
	KW	2.28	2.43	2.64	2.92	3.28	3.70	4.18
N5A8T48AKAWA - Low								
30.0 (-1.1)	TCG	23.74	24.01	23.49	22.24	20.28	17.68	14.53
	SDT	63.25	73.31	83.18	92.88	102.42	111.81	121.03
	KW	1.39	1.58	1.79	2.02	2.29	2.58	2.91
35.0 (1.7)	TCG	28.01	27.71	26.79	25.28	23.18	20.52	17.37
	SDT	64.37	74.26	84.02	93.64	103.15	112.52	121.78
	KW	1.35	1.55	1.76	1.99	2.26	2.55	2.88
40.0 (4.4)	TCG	32.43	31.61	30.35	28.60	26.39	23.69	20.56
	SDT	65.52	75.26	84.90	94.47	103.97	113.32	122.59
	KW	1.31	1.51	1.73	1.96	2.23	2.52	2.85
45.0 (7.2)	TCG	36.93	35.67	34.09	32.16	29.85	27.16	24.08
	SDT	66.70	76.31	85.86	95.36	104.82	114.20	123.48
	KW	1.27	1.48	1.69	1.93	2.20	2.49	2.82
50.0 (10.0)	TCG	41.50	39.85	38.01	35.95	33.57	30.92	27.94
	SDT	67.90	77.38	86.85	96.22	105.75	115.14	124.47
	KW	1.23	1.44	1.66	1.90	2.17	2.46	2.79
55.0 (12.8)	TCG	46.08	44.10	42.06	39.88	37.50	34.89	32.00
	SDT	69.11	78.48	87.88	97.29	106.73	116.14	125.45
	KW	1.18	1.39	1.62	1.86	2.13	2.43	2.76

Manufacturer reserves the right to change, at any time, specifications and designs without notice and without obligations.

Condenser Only Ratings* (Continued)

SST °F (°C)		CONDENSER ENTERING AIR TEMPERATURES °F (°C)						
		55.0 (12.8)	65.0 (18.3)	75.0 (23.9)	85.0 (29.4)	95.0 (35.0)	105.0 (40.6)	115.0 (46.1)
N5A8T60AKAWA - High								
30.0 (-1.1)	TCG	49.68	47.27	44.86	42.46	39.97	37.34	34.52
	SDT	70.09	79.39	88.66	98.04	107.42	116.79	126.14
	KW	2.49	2.82	3.17	3.56	4.01	4.51	5.08
35.0 (1.7)	TCG	54.65	52.06	49.48	46.88	44.17	41.29	38.23
	SDT	71.44	80.62	89.88	99.18	108.51	117.81	127.11
	KW	2.53	2.85	3.20	3.59	4.04	4.54	5.12
40.0 (4.4)	TCG	60.04	57.25	54.48	51.63	48.69	45.55	42.22
	SDT	72.97	82.00	91.20	100.42	109.69	118.94	128.16
	KW	2.58	2.88	3.23	3.62	4.07	4.58	5.17
45.0 (7.2)	TCG	65.80	62.82	59.84	56.76	53.54	50.18	46.56
	SDT	74.50	83.50	92.63	101.80	110.97	120.18	129.32
	KW	2.61	2.92	3.27	3.66	4.11	4.63	5.22
50.0 (10.0)	TCG	72.02	68.84	65.58	62.25	58.78	55.10	51.14
	SDT	76.22	85.18	94.19	103.27	112.37	121.48	130.50
	KW	2.66	2.97	3.31	3.70	4.16	4.68	5.28
55.0 (12.8)	TCG	78.70	75.27	71.76	68.15	64.36	60.36	56.09
	SDT	78.11	86.94	95.86	104.87	113.86	122.85	131.78
	KW	2.71	3.01	3.35	3.75	4.21	4.74	5.35
N5A8T60AKAWA - Low								
30.0 (-1.1)	TCG	31.80	30.14	28.52	26.86	25.00	22.92	20.53
	SDT	65.12	74.57	84.10	93.65	103.15	112.63	122.05
	KW	1.73	1.99	2.26	2.55	2.86	3.20	3.57
35.0 (1.7)	TCG	35.17	33.47	31.81	30.06	28.14	25.93	23.41
	SDT	66.00	75.42	84.91	94.44	103.92	113.36	122.75
	KW	1.68	1.94	2.22	2.52	2.83	3.17	3.55
40.0 (4.4)	TCG	38.82	37.09	35.37	33.55	31.50	29.20	26.53
	SDT	66.96	76.35	85.81	95.29	104.76	114.16	123.50
	KW	1.62	1.89	2.18	2.48	2.80	3.14	3.52
45.0 (7.2)	TCG	42.80	41.03	39.25	37.34	35.19	32.74	29.92
	SDT	68.02	77.40	86.79	96.23	105.66	115.01	124.31
	KW	1.57	1.85	2.13	2.44	2.76	3.11	3.49
50.0 (10.0)	TCG	47.13	45.33	43.47	41.47	39.18	36.59	33.65
	SDT	69.16	78.49	87.85	97.27	106.62	115.94	125.23
	KW	1.51	1.80	2.09	2.40	2.73	3.08	3.46
55.0 (12.8)	TCG	51.90	50.00	48.08	45.93	43.54	40.77	37.59
	SDT	70.47	79.67	89.04	98.36	107.69	116.94	126.16
	KW	1.47	1.75	2.05	2.36	2.69	3.05	3.43

* AHRI listing applies only to systems shown in Combination Ratings table.
KW - Outdoor Unit Kilowatts Only.
SDT -Saturated Temperature Leaving Compressor (°F)
SST -Saturated Temperature Entering Compressor (°F/°C)
TCG -Gross Cooling Capacity (1000 Btuh)

Guide Specifications

Air-Cooled, Split-System Air Conditioner
N5A8T
2 to 5 nominal tons

GENERAL

System Description

Outdoor-mounted, air-cooled, split-system air conditioner unit suitable for ground or rooftop installation. Unit consists of a hermetic compressor, an air-cooled coil, propeller-type condenser fan, and a control box. Unit will discharge supply air upward as shown on contract drawings. Unit will be used in a refrigeration circuit to match up to a packaged fan coil or coil unit.

Quality Assurance

- Unit will be rated in accordance with the latest edition of AHRI Standard 210/240.
- Unit will be certified for capacity and efficiency, and listed in the latest AHRI directory.
- Unit construction will comply with latest edition of ANSI/ ASHRAE and with NEC.
- Unit will be constructed in accordance with UL standards and will carry the UL label of approval. Unit will have c-UL approval.
- Unit cabinet will be capable of withstanding Federal Test Method Standard No. 141 (Method 6061) 500-hr salt spray test.
- Air-cooled condenser coils will be leak tested and pressure tested.
- Unit constructed in ISO9001 approved facility.

Delivery, Storage, and Handling

- Unit will be shipped as single package only and is stored and handled per unit manufacturer's recommendations.

Warranty (for inclusion by specifying engineer)

- U.S. and Canada only.

PRODUCTS

Equipment

- Factory assembled, single piece, air-cooled air conditioner unit. Contained within the unit enclosure is all factory wiring, piping, controls, compressor, refrigerant charge R-454B, and special features required prior to field start-up.

Unit Cabinet

- Unit cabinet will be constructed of galvanized steel, bonderized, and coated with post-paint

Fans

Condenser fan will be direct-drive propeller type, discharging air upward.

- Condenser fan motors will be totally enclosed, 1-phase type with class B insulation and permanently lubricated bearings. Shafts will be corrosion resistant.
- Fan blades will be statically and dynamically balanced.
- Condenser fan openings will be equipped with coated steel wire safety guards.

Compressor

- Compressor will be hermetically sealed.
- Compressor will be mounted on rubber vibration isolators.

Condenser Coil

- Condenser coil will be air cooled.
- Coil will be constructed of aluminum fins mechanically bonded to copper or aluminum tubes which are then cleaned, dehydrated, and sealed.

Refrigeration Components

- Refrigeration circuit components will include liquid-line shutoff valve with sweat connections, vapor-line shutoff valve with sweat connections, system charge of R-454B refrigerant, and compressor oil.
- Unit will be shipped with filter drier for R-454B refrigerant.

Operating Characteristics

- The capacity of the unit will meet or exceed _____ Btuh at a suction temperature of _____ °F/°C. The power consumption at full load will not exceed _____ kW.
- Combination of the unit and the evaporator or fan coil unit will have a total net cooling capacity of _____ Btuh or greater at conditions of _____ CFM entering air temperature at the evaporator at _____ °F/°C wet bulb and _____ °F/°C dry bulb, and air entering the unit at _____ °F/°C.
- The system will have a SEER of _____ Btuh/watt or greater at DOE conditions.

Electrical Requirements

- Nominal unit electrical characteristics will be _____ v, single phase, 60 Hz. The unit will be capable of satisfactory operation within voltage limits of _____ v to _____ v.
- Unit electrical power will be single point connection.
- Control circuit will be 24v.

Special Features

- Refer to section of this literature identifying accessories and descriptions for specific features and available enhancements.

System Design Summary

1. System must be installed with factory approved R-454B Indoor unit only.
2. Factory authorized dissipation control board must be installed with indoor unit.
3. Intended for outdoor installation with free air inlet and outlet. Outdoor fan external static pressure available is less than 0.01-in. wc.
4. Minimum outdoor operating air temperature without low-ambient operation accessory is 55°F (12.8°C).
5. The maximum outdoor operating ambient in cooling mode is 125°F (51.67°C) when operating voltage is 230v.
6. For reliable operation, unit must be level in all horizontal planes.
7. For interconnecting refrigerant tube lengths greater than 80 ft (23.4 m) and/or elevation differences between indoor and outdoor units greater than 20 ft (6.1 m), consult Residential Piping and Long Line Guideline and Service Manual available from equipment distributor.
8. If any refrigerant tubing is buried, provide a 6 in. (152.4 mm) vertical rise to the valve connections at the unit. Refrigerant tubing lengths up to 36 in. (914.4 mm) may be buried without further consideration. Do not bury refrigerant lines longer than 36 in. (914.4 mm).
9. Use only copper wire for electric connection at unit. Aluminum and clad aluminum are not acceptable for the type of connector provided.
10. Do not apply capillary tube indoor coils to these units.
11. Factory-supplied filter drier must be installed.

Manufacturer reserves the right to change, at any time, specifications and designs without notice and without obligations.

© 2024 Carrier. All rights reserved.