Ultra Low NOx
Condensing Gas Furnace

Owner's Manual

NOTE: Read the entire instruction manual before starting the installation.

NOTE: Our products are designed, tested and built in accordance with DOE standardized procedures; however, actual operating results and efficiencies may vary based on manufacturing and supplier tolerances, equipment configuration, operating conditions and installation practices.

NOTE TO INSTALLER: This manual must be left with the equipment user.

USER: Please read all instructions in the manual and retain all manuals for future reference.

⚠ WARNING

CARBON MONOXIDE POISONING HAZARD

Failure to follow this warning could result in personal injury and/or death.

Carbon Monoxide (CO) is a colorless, odorless, and tasteless poisonous gas that can be fatal when inhaled. Follow all installation, maintenance, and service instructions. See additional information below regarding the installation of a CO Alarm.

Most states in the USA and jurisdictions in Canada have laws that require the use of Carbon Monoxide (CO) alarms with fuel burning products. Examples of fuel burning products are furnaces, boilers, space heaters, generators, water heaters, stoves/ranges, clothes dryers, fireplaces, incinerators, automobiles, and other internal combustion engines. Even if there are no laws in your jurisdiction requiring a CO Alarm, it's highly recommended that whenever any fuel burning product is used in or around the home or business that the dwelling be equipped with a CO Alarm(s). The Consumer Product Safety Commission recommends the use of CO Alarm(s). The CO Alarm(s) must be installed, operated, and maintained according to the CO Alarm manufacturer's instructions. For more information about Carbon Monoxide, local laws, or to purchase a CO Alarm online, please visit the following website. https://www.kidde.com.

⚠ WARNING

FIRE OR EXPLOSION HAZARD

Failure to follow safety warnings exactly could result in personal injury, death, or property damage.

Do not store or use gasoline or other flammable vapors and liquids in the vicinity of this or any other appliance.

WHAT TO DO IF YOU SMELL GAS

- Do not try to light any appliance.
- Do not touch any electrical switch; do not use any phone in your building.
- Leave the building immediately.
- Immediately call your gas supplier from a neighbor's phone. Follow the gas supplier's instructions.
- If you cannot reach your gas supplier, call the fire department.

⚠ WARNING

ELECTRICAL OPERATION HAZARD

Failure to follow this warning could result in personal injury, death, or property damage.

Do not use this furnace if any part has been under water. A flood-damaged furnace is extremely dangerous. Attempts to use the furnace can result in fire or explosion. A qualified service agency should be contacted to inspect the furnace and to replace all gas controls, control system parts, and electrical parts that have been wet, or the entire furnace if deemed necessary.

⚠ WARNING

CARBON MONOXIDE POISONING HAZARD

Failure to follow this warning could result in personal injury and/or death.

Carbon Monoxide is invisible, odorless, and toxic! Install a carbon monoxide alarm in your home. Most states have laws that require carbon monoxide alarms in the home. Locate the carbon monoxide alarm in the living area of your home and away from gas appliances and doorways to attached garages. Follow the alarm manufacturer's instruction included with the alarm.

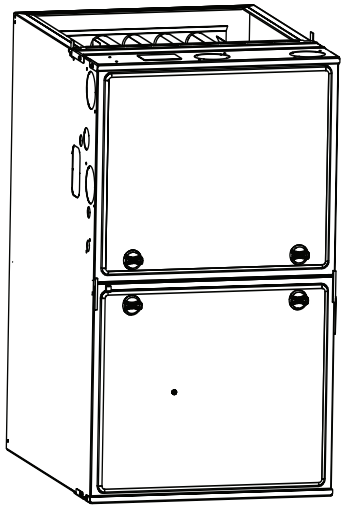

A200219

TABLE OF CONTENTS

WELCOME TO TODAY'S GENERATION OF COMFORT 2
FURNACE COMPONENTS 2
SAFETY CONSIDERATIONS 2
BEFORE STARTING YOUR FURNACE 4
STARTING YOUR FURNACE. 4
STEPS FOR STARTING YOUR FURNACE 4
SHUTTING DOWN YOUR FURNACE. 6
MINIMUM & MAXIMUM TEMPERATURE SETTING FOR YOUR FURNACE 6
PERFORMING ROUTINE MAINTENANCE 6
FILTERING OUT TROUBLE. 6
COMBUSTION AREA AND VENT SYSTEM 8
WINTERIZATION. 8
A CHECK-UP CHECKLIST 9
BEFORE YOU REQUEST A "SERVICE CALL" 9
For insufficient airflow: 9
If furnace fails to operate:. 9
MAINTENANCE CHECKLIST 10

WELCOME TO TODAY'S GENERATION OF COMFORT

Congratulations! In light of rising energy costs, a 90+% AFUE Condensing Gas Furnace is among the soundest investments today's homeowner can make.

Your new furnace is truly a triumph of technology in home heating. A revolutionary design employs two heat exchangers to "squeeze" out the maximum amount of heat from the fuel consumed. In fact, your new furnace is so efficient, over 90%* of the heat generated during combustion is captured and delivered inside your home.

This furnace is among the safest, most dependable, energy-efficient furnaces you can buy today. We are proud of the technological advances incorporated into the design of this furnace. With only minimal care, your new furnace will deliver many years of money-saving home comfort and enjoyment. Spend just a few minutes with this manual to learn the operation of your new furnace and the small amount of maintenance it takes to help keep it operating at peak efficiency year after year.

* The output capacity and any representations of efficiency for this furnace are based on standard U.S. Department of Energy test procedures.

Use of the AHRI Certified TM Mark indicates a manufacturer's participation in the program. For verification of certification for individual products, go to www.ahridirectory.org .

ISO 9001 Quality

A200103

WARNING

ELECTRICAL SHOCK, FIRE OR EXPLOSION HAZARD

Failure to follow safety warnings exactly could result in dangerous operation, serious injury, death, or property damage.

Improper servicing could result in dangerous operation, serious injury, death or property damage.

- Before servicing, disconnect all electrical power to furnace.
- When servicing controls, label all wires prior to disconnecting. Reconnect wires correctly.
- Verify proper operation after servicing.

FURNACE COMPONENTS

Furnace shown in upflow position; may be used in horizontal orientation or applications.

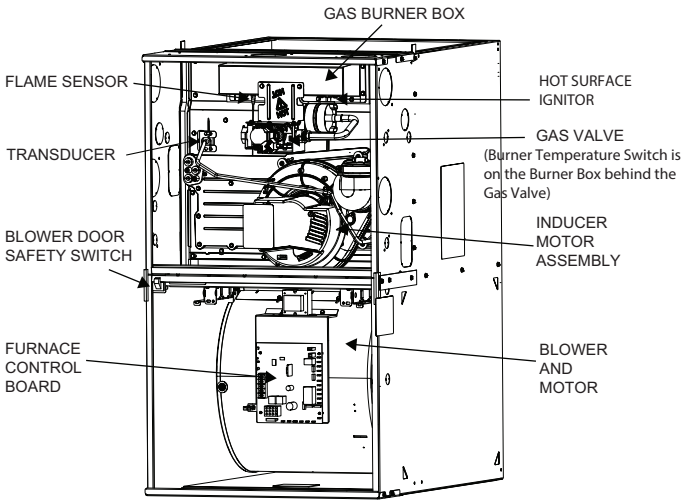

A190258

Fig. 1 – Furnace Components

SAFETY CONSIDERATIONS

Installing and servicing of heating equipment can be hazardous due to gas and electrical components. Only trained and qualified personnel should install, repair, or service heating equipment.

Untrained personnel can perform basic maintenance functions such as cleaning and replacing air filters. All other operations must be performed by trained service personnel. Observe safety precautions in this manual, on tags, and on labels attached to the furnace and other safety precautions that may apply.

Recognize safety information. This is the safety-alert symbol ⚠. When you see this symbol on the furnace and in instructions or manuals, be alert to the potential for personal injury.

Understand the signal words DANGER, WARNING, CAUTION, and NOTE. DANGER, WARNING, and CAUTION are used with the safety-alert symbol. DANGER identifies the most serious hazards which will result in severe personal injury or death. WARNING signifies hazards which could result in personal injury or death. CAUTION is used to identify unsafe practices which may result in minor personal injury or product and property damage. NOTE is used to highlight suggestions which will result in enhanced installation, reliability, or operation.

To minimize the possibility of serious personal injury, fire, damage to your furnace, or improper operation, carefully follow these safety rules which apply to both direct-vent and non-direct vent applications:

- Your new gas furnace may have been installed in one of two ways, as a direct-vent (2-pipe-Fig. 2) application or as a non-direct vent (1-pipe-Fig. 3) application.
- In a direct-vent (2-pipe) application, your furnace uses air from outside the home for combustion and vents flue gas to the outdoors. This type of application will have two pipes running from the furnace to the outdoors. In some cases, the inlet air pipe may be located in an area that has access to outdoor air, such as an attic. In all cases, the outlet vent pipe must be routed to the outdoors (see Fig. 2). In this application, the vent and air-intake pipes must terminate outside the structure and must not be obstructed in any way. Do not block or obstruct air openings on furnace or spaces around furnace.
- In a non-direct vent (1-pipe) application, your furnace uses air from adjacent to the furnace for combustion and vents flue gas to the outdoors. This type of application will have only one pipe running from the furnace to the outdoors (see Fig. 3). The other pipe will

terminate in the same space as the furnace and is the source of combustion air for your furnace. Therefore, the furnace must not be enclosed in an airtight room or be sealed behind solid doors. It must have adequate airflow for efficient combustion and safe ventilation. Do not obstruct the combustion-air pipe in any way. The vent pipe must terminate outside the structure and must not be obstructed in any way. Do not block or obstruct air openings or space around furnace.

⚠ WARNING

FIRE OR EXPLOSION HAZARD

Failure to follow warnings could result in personal injury, death, or property damage.

Keep insulation clear of furnace and maintain clearances shown on unit clearance label.

Do not keep combustible materials, gasoline, and other flammable liquids or vapors around your furnace.

⚠ WARNING

CARBON MONOXIDE POISONING HAZARD

Failure to follow instructions could result in severe personal injury or death due to carbon monoxide poisoning, if combustion products infiltrate into the building.

Check that all openings in the outside wall around the vent (and air intake) pipe(s) are sealed to prevent infiltration of combustion products into the building.

Check that furnace vent (and air intake) terminal(s) are not obstructed in any way during all seasons.

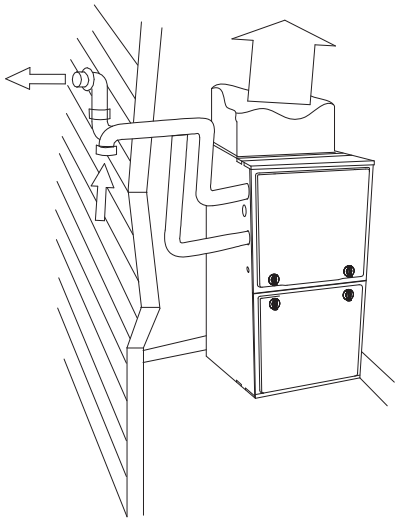

A11303

Fig. 2 – Exterior Vent Pipes

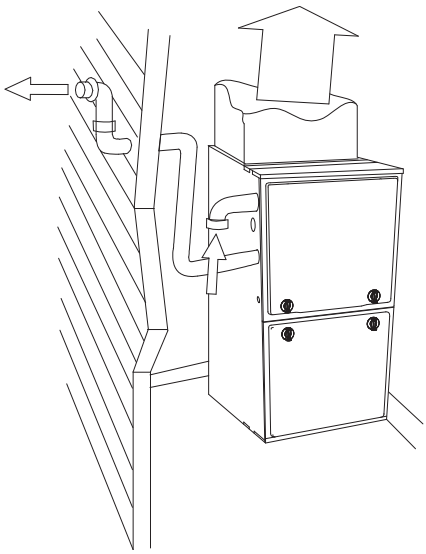

A11304

Fig. 3 – Interior Combustion - Air Pipe

⚠ WARNING

FIRE OR EXPLOSION HAZARD

Failure to follow this warning could result in personal injury, death, or property damage.

Do not keep combustible materials, gasoline, and other flammable liquids or vapors around your furnace.

- Keep the area around your furnace clear and free of combustible materials, gasoline, and other flammable liquids and vapors.

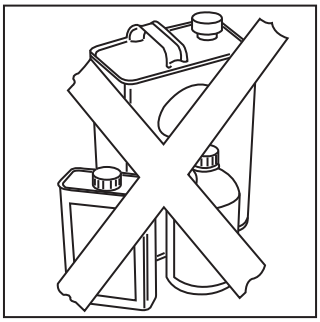

A92182

Fig. 4 – NO combustible materials near furnace

- Do not cover the furnace, store trash or debris near it, or in any way block the ow of fresh air to the unit.

⚠ CAUTION

UNIT OPERATION HAZARD

Failure to follow this caution may result in intermittent unit operation.

For proper and safe operation the furnace needs air for combustion and ventilation. Do not block or obstruct air openings on the furnace, air opening to the area in which the furnace is installed, and the space around the furnace.

In addition to the safety rules above, make sure that the following combustion-air requirements are met for non-direct vent applications:

- Combustion air must be clean and uncontaminated with chlorine or fluorine. These compounds are present in many products around the

home, such as: water softener salts, laundry bleaches, detergents, adhesives, paints, varnishes, paint strippers, waxes, and plastics.

- Make sure the combustion air for your furnace does not contain any of these compounds. During remodeling be sure the combustion air is fresh and uncontaminated. If these compounds are burned in your furnace, the heat exchangers may deteriorate.
- A furnace installed in an attic or other insulated space must be kept free and clear of insulating material. Examine the furnace area when the furnace is installed or when insulation is added. Some insulation materials may be combustible.
- Should the gas supply fail to shut off or if overheating occurs, shut off the gas valve to the furnace before shutting off electrical supply.

This furnace contains SAFETY DEVICES which must be MANUALLY RESET. If the furnace is left unattended for an extended period of time, have it checked periodically for proper operation. This precaution will prevent problems associated with no heat, such as frozen water pipes, etc. See "Before You Request a Service Call" section in this manual.

BEFORE STARTING YOUR FURNACE

NOTICE

IMPORTANT START-UP INFORMATION

When a furnace is started after initial installation, minor smoke and odor may be present as a result of the manufacturing process. Some occupants could be sensitive to minor smoke and odor. It is recommended that doors and windows be open during the first heating cycle.

Examine the furnace installation to determine that:

1. All flue gas carrying areas external to the furnace (i.e. chimney, vent connector) are clear and free of obstructions.
2. The vent connector is in place, slopes upward and is physically sound without holes or gaps.
3. The return-air duct connection(s) is physically sound, is sealed to the furnace casing, and terminates outside the space containing the furnace.
4. The physical support of the furnace is sound without sagging cracks, gaps, etc. around the base.
5. There are no obvious signs of deterioration of the furnace.

STARTING YOUR FURNACE

WARNING

FIRE AND EXPLOSION HAZARD

Failure to follow this warning could result in personal injury, death or property damage.

Should the gas supply fail to shut off or if overheating occurs, turn off the manual gas valve to the furnace BEFORE turning off the electrical supply and install lockout tag.

Instead of a continuously burning pilot flame which wastes valuable energy, your furnace uses an automatic, hot surface ignition system to light the burners each time the thermostat signals the furnace to start.

Follow these important safeguards:

- Never attempt to manually light the burners with a match or other source of flame.

A92319

Fig. 5 – Do Not Light Burner with Match

- Read and follow the operating instructions on inside of main furnace door, especially the item that reads as follows:
  "Wait 5 minutes to clear out any gas. Then smell for gas, including near the floor. If you smell gas, STOP! Follow "B" in the safety information on furnace label. If you don't smell gas, go to the next step."
- If a suspected malfunction occurs with your gas control system, such as the burners do not light when they should, refer to the shutdown procedures on inside of main furnace door, or in the "Shutting Down Your Furnace" section and call your dealer as soon as possible.
- CHECK AIR FILTER: Before attempting to start your furnace, be sure the furnace filter is clean and in place. See "Performing Routine Maintenance" section in this manual. Do not run the furnace without a filter in place. Then proceed as follows:

STEPS FOR STARTING YOUR FURNACE

1. Set your room thermostat to the lowest temperature setting and set the "MODE" to "OFF" (see Fig. 6).

A09564

Fig. 6 – Lowest Temperature Setting

2. Close the external manual gas valve (see Fig. 7).

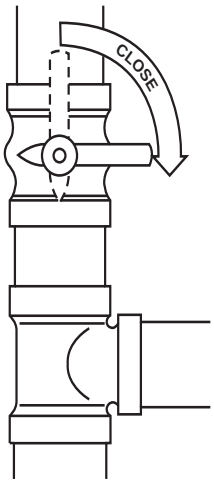

A06188

Fig. 7 – Close Valve

3. Turn OFF electrical supply to the furnace (see Fig. 8).

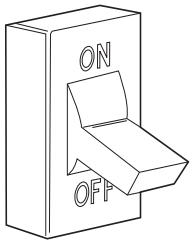

A92185

Fig. 8 – Turn Off Electrical Supply

4. Remove the main furnace door (see Fig. 9).

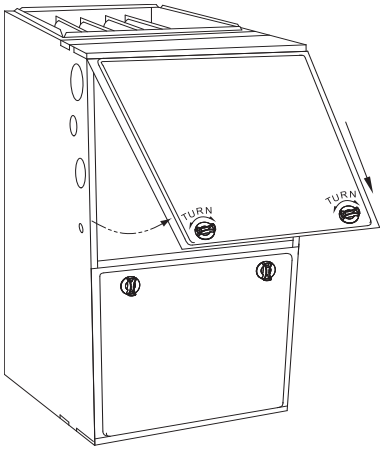

A11302

Fig. 9 – Remove Main Furnace Door (Upflow Configuration)

5. Turn the control switch on the gas control to the OFF position and wait five minutes (see Fig. 10). Then smell for gas, including near the floor. If you smell gas, STOP! Follow "B" on furnace label. If you don't smell gas, go to next step.

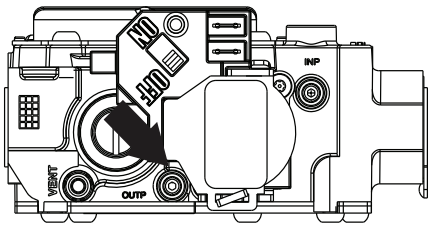

A180224

Fig. 10 – Control Switch to OFF

6. After waiting five minutes, turn control switch on the gas control to the ON position. Turn the control switch to ON (see Fig. 11).

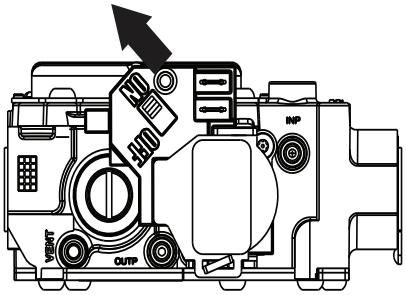

A180222

Fig. 11 – Control Switch to ON

7. Replace main furnace door (see Fig. 12).

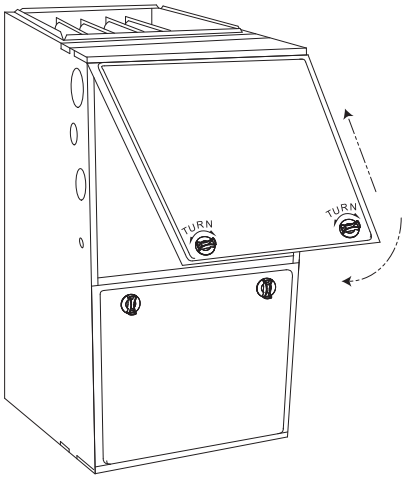

A11301

Fig. 12 – Furnace Door Replaced (Upflow Configuration)

8. Turn ON the electrical supply to the furnace and wait one minute (see Fig. 13).

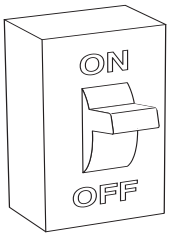

A92359

Fig. 13 – Turn on Electrical Supply

9. Open the external manual gas valve (see Fig. 14).

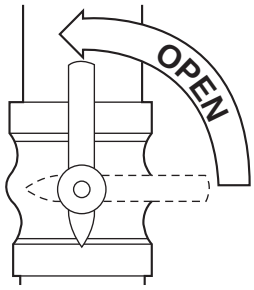

A06189

Fig. 14 – Open Valve

10. Set the room thermostat "MODE" to "HEAT" and adjust the set point to a temperature slightly above the room temperature. This will automatically signal the furnace to start.
11. When the furnace receives the start signal, the combustion air draft inducer is started. When the pressure switch senses that there is sufficient combustion air, the hot surface igniter is energized.
    After the hot surface igniter is heated for about 20 seconds, the gas valve permits gas to flow to the main burners. After ignition and a time delay of up to 60 seconds, the furnace blower will start.

NOTE: If the main burners fail to ignite, the furnace control system will go through several more ignition cycles. Then, if burners fail to ignite, the system will lockout.. If lockout occurs, or blower does not come on, shut down the furnace and call your dealer for service.

12. Set your thermostat to the temperature that satisfies your comfort requirements. SUGGESTION: Setting the thermostat back a few degrees—and compensating for the difference with warmer clothing—can make a big difference in your fuel consumption on extremely cold days. The few degrees at the top of your thermostat "comfort level" are the most costly degrees to obtain.

When the room temperature drops below the temperature selected on the thermostat, the furnace will switch on automatically. When the room

temperature reaches the setting selected on the thermostat, the furnace will be automatically switched off.

Continuous Fan Operation -Some thermostats have a "FAN" switch with two selections: AUTO and ON. When the thermostat is set on AUTO, the furnace blower cycles on and off, controlled by the thermostat. In ON position, the furnace blower runs continuously. Continuous fan keeps the temperature level in your home more evenly balanced. It also continuously filters the indoor air.

SHUTTING DOWN YOUR FURNACE

Should you need to shut down your furnace for service or maintenance, you will need to turn the furnace off. The following procedures must be followed:

1. Set your room thermostat to the lowest temperature setting and set the "MODE" to "OFF" (see Fig. 15).

A09564

Fig. 15 – Lowest Temperature Setting

2. Close the external manual gas valve (see Fig. 16).

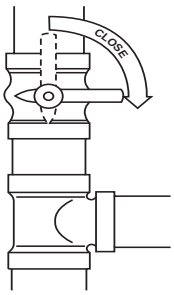

A06188

Fig. 16 – Close the External Manual Valve

3. Turn off electrical supply to the furnace (see Fig. 17).

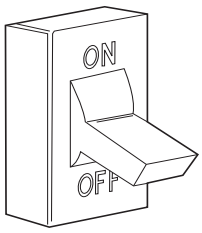

A92185

Fig. 17 – Turn Off Electrical Supply

4. Remove main furnace door (see Fig. 9).
5. Turn control switch on the gas control to "OFF" position (see Fig. 10).
6. Replace main furnace door (see Fig. 12).
7. If the furnace is being shut down because of a malfunction, call your dealer as soon as possible.

⚠ CAUTION

UNIT AND PROPERTY DAMAGE HAZARD

Failure to follow this caution may result in unit component or property damage.

Furnace is not to be installed, operated, and then turned off and left turned off in an unoccupied structure during winter. See "Winterization" procedures in this manual.

MINIMUM & MAXIMUM TEMPERATURE SETTING FOR YOUR FURNACE

This furnace is designed for minimum continuous return-air temperature of 60°F (16°C) or intermittent operation down to 55°F (13°C) such as when used with a night setback thermostat. Return-air temperature must not exceed 80°F (27°C). Failure to follow these return-air temperature limits may affect reliability of heat exchangers, motors, and controls.

PERFORMING ROUTINE MAINTENANCE

NOTE: The qualified installer or agency must use only factory-authorized replacement parts, kits, and accessories when modifying this product.

Installing and servicing of heating equipment can be hazardous due to gas and electrical components.

Only trained and qualified personnel should install, repair, or service heating equipment. Untrained personnel can perform basic maintenance functions such as cleaning and replacing air filters.

All other operations must be performed by trained service personnel. Observe safety precautions in this manual, on tags, and on labels attached to the furnace and other safety precautions that may apply.

With proper maintenance and care, your furnace will operate economically and dependably. Instructions for basic maintenance are found on this and the following pages. However, before beginning maintenance, follow these safety precautions:

⚠ WARNING

ELECTRICAL SHOCK HAZARD

Failure to follow this warning could result in personal injury or death.

Turn off electrical power supply to your furnace and install lockout tag before removing the access doors to service or perform maintenance.

⚠ CAUTION

CUT HAZARD

Failure to follow this caution may result in personal injury.

Although special care has been taken to minimize sharp edges, be extremely careful when handling parts or reaching into the furnace. Wear safety glasses, gloves, and appropriate protective clothing.

FILTERING OUT TROUBLE

NOTE: The manufacturer has specified filters which will enable your furnace to provide lasting comfort and efficiency throughout its life. Contact your dealer to help you choose filters for your furnace that both collect dirt before it enters your furnace, as well as provide a low resistance to circulating air. Avoid filters that report high cleaning efficiencies, but do not allow air to pass easily through them.

⚠ CAUTION

UNIT PERFORMANCE HAZARD

Failure to follow this caution may result in unit component damage.

Never operate your furnace without a filter in place. Doing so may damage the furnace blower motor. An accumulation of dust and lint on internal parts of your furnace can cause a loss of efficiency.

⚠ CAUTION

PERSONAL INJURY HAZARD

Failure to follow this caution may result in personal injury.

Use care when cutting support rods in filters to protect against flying pieces and sharp rod ends. Wear safety glasses, gloves, and appropriate protective clothing.

A dirty filter will cause excessive stress on the furnace, heat exchanger, and blower motor, and can cause it to overheat and automatically shut down. The furnace filter should be checked every four weeks and be cleaned or replaced if necessary.

If installed with factory-specified disposable media filter, check or replace filter before each heating and cooling season. Replace disposable media filter at least once a year.

If your furnace filter needs replacing, be sure to use the same size and type of filter that was originally specified.

The air filter for the furnace may be located an external filter cabinet attached to the side or bottom of the furnace casing. If the air filter has been installed in another location, contact your dealer for instructions. To inspect, clean and/or replace the air filter(s), follow these steps:

1. Turn off electrical supply to the furnace (see Fig. 18).
2. Remove air filter from the filter cabinet.
   a. Remove filter cabinet door (see Fig. 19 and Fig. 20).

NOTE: It maybe necessary to remove one thumbscrew.

   b. Slide air filter out of furnace. Keep dirty side up (if dirty) to avoid spilling dirt (see Fig. 21 and Fig. 22).
3. Inspect the filter. If torn replace it.

NOTE: If a washable filter was supplied with the furnace and has been replaced by:

- Disposable media filter--Do not clean. If dirty, replace only with media filter having the same part number and size. Install with airflow direction arrow pointing towards blower.
- Electronic Air Cleaner (EAC), refer to the EAC Owner's Manual for maintenance information.

4. If washable filter, wash filter (if dirty) in a sink, bathtub, or outside with a garden hose. Always use cold tap water. A mild liquid detergent may be used if necessary. Spray water through filter in the opposite direction of airflow. Allow filter to dry.
5. Reinstall clean air filter.
6. Turn on electrical supply to the furnace.

If your furnace air filter needs to be replaced, be sure to use a factory-authorized filter of the same size that was originally specified. Use the filter tables and compare your furnace size with the proper filter size.

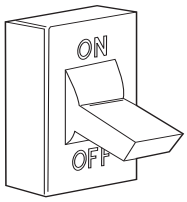

A92185

Fig. 18 – Turn Off Electrical Supply

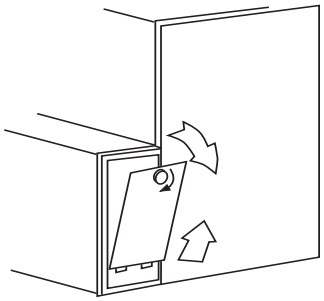

A00225

Fig. 19 – Removal of Filter Cabinet Door from Side Blower Cabinet

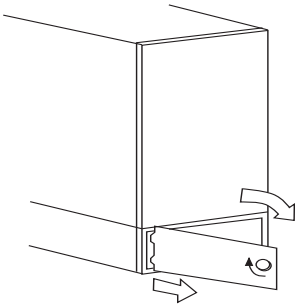

A00226

Fig. 20 – Removal of Filter Cabinet Door from Bottom Blower Cabinet

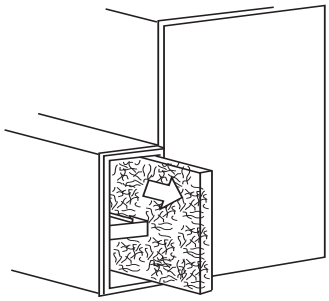

A00227

Fig. 21 – Removal of Filter from Side Blower Cabinet

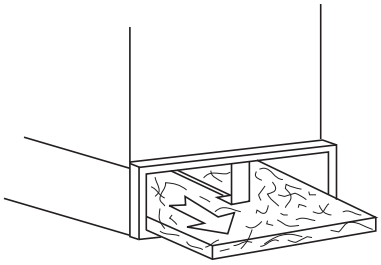

A00228

Fig. 22 – Removal of Filter from Bottom Blower Cabinet

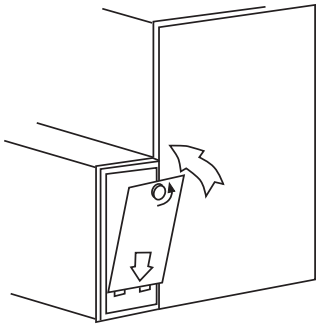

A00229

Fig. 23 – Replacement of Filter Cabinet Door to Side Blower Cabinet

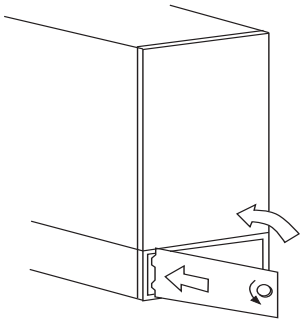

A00230

Fig. 24 – Replacement of Filter Cabinet Door to Bottom Blower Cabinet

Table 1 – Air Filter Located in Filter Cabinet

FILTER CABINET HEIGHT - IN (MM)	FILTER SIZE - IN (MM)*	FILTER TYPE†
16 (406)	(1) 16 x 25 x 3/4 (406 x 635 x 19) or (1) 16 x 25 x 4-5/16 (406 x 635 x 110)	Washable
20 (508)	(1) 20 x 25 x 3/4 (508 x 635 x 19) or (1) 20 x 25 x 4-5/16 (508 x 635 x 110)	Washable
24 (610)	(1) 24 x 25 x 3/4or (610 x 635 x 19) or (1) 24 x 25 x 4-5/16 (610 x 635 x 110)	Washable

*. Filters with a side return-air may have a different filter size. Measure the filter to obtain the correct size.

†. Recommended to maintain air filter face velocity. See Product Data for part number..)

COMBUSTION AREA AND VENT SYSTEM

⚠ CAUTION

UNIT OPERATION HAZARD

Failure to follow this caution may result in intermittent unit operation.

For proper and safe operation the furnace needs air for combustion and ventilation. Do not block or obstruct air openings on the furnace, air opening to the area in which the furnace is installed, and the space around the furnace.

Visually inspect the combustion area and vent system before each heating season. Make sure that all PVC pipes leading into the combustion area and vent are free from any cracks and sags. An accumulation of dirt, soot, or rust can mean a loss of efficiency and improper performance.

Check the combustion-air intake adjacent to the furnace or outside your home for blockage. Also check the vent pipe on the outside of your home for blockage.

NOTE: If your furnace makes a loud noise when the main burners are ignited, shut down the furnace and call your servicing dealer.

Use your flashlight and follow these steps for inspecting the combustion area and vent system of your furnace:

⚠ WARNING

CARBON MONOXIDE POISONING HAZARD

Failure to follow this warning could result in personal injury or death.

If dirt, rust, soot, or scale accumulations are found, call your dealer. Do not operate your furnace.

1. Turn off electrical supply and gas supply to the furnace and remove the main furnace door (see Fig. 6, Fig. 7, Fig. 8, Fig. 9, and Fig. 10).

⚠ WARNING

ELECTRICAL SHOCK HAZARD

Failure to follow this warning could result in personal injury or death.

Turn off electrical power supply to your furnace and install lockout tag before removing the access doors to service or perform maintenance.

2. Inspect the gas burner area for dirt, rust, soot or scale.
3. Inspect the combustion-air and vent PVC pipes for sags, holes, cracks, water leaks, blockage or disconnections. Horizontal portions of vent pipe must slope downward toward the furnace.
4. If your furnace is free of the above conditions,turn on electrical and gas supplies to the furnace.

⚠ WARNING

CARBON MONOXIDE POISONING HAZARD

Failure to follow this warning could result in personal injury or death.

If holes are found or if the vent pipe is obstructed or is not connected, toxic fumes can escape into your home. DO NOT OPERATE YOUR FURNACE. Call your dealer for service.

5. Start your furnace and observe its operation. If you observe a suspected malfunction, call your dealer.
6. Replace main furnace door.

WINTERIZATION

⚠ CAUTION

UNIT AND PROPERTY DAMAGE HAZARD

Failure to follow this caution may result in unit component or property damage.

If the furnace is installed in an unconditioned space where the ambient temperatures may be 32° F (0° C) or lower, freeze protection measures must be taken to prevent minor property or product damage.

Since the furnace uses a condensing heat exchanger, some water will accumulate in the unit as a result of the heat transfer process. Therefore, once it has been operated, it cannot be turned off and left off for an extended period of time when temperatures will reach 32°F (0°C) or lower unless winterized. Follow these procedures to winterize your furnace:

⚠ CAUTION

UNIT COMPONENT DAMAGE HAZARD

Failure to follow this caution may result in damage to the furnace and other property damage.

Do not use ethylene glycol (Automotive antifreeze coolant or equivalent). Failure of plastic components may occur.

1. Obtain propylene glycol (RV/swimming pool antifreeze or equivalent).
2. Turn off gas and electrical supplies to your furnace.

WARNING

ELECTRICAL SHOCK HAZARD

Failure to follow this warning could result in personal injury or death.

Turn off electrical power supply to your furnace and install lockout tag before removing the access doors to service or perform maintenance.

3. Remove furnace control compartment door.
4. Remove one of the unused rubber plugs in the port on the collector box opposite the condensate trap (see Fig. 25).
5. Connect a field supplied 3/8-in. (9.5-mm) ID tube to the open port on the collector box
6. Insert a field supplied funnel into the tube.
7. Pour 1 quart of anti-freeze solution into the funnel/tube. Antifreeze should run through the inducer housing, overfill condensate trap and flow to an open drain.
8. If a condensate pump is used, check with pump manufacturer to verify pump is safe for use with antifreeze used. Allow pump to start and pump anti-freeze to open drain.
9. Remove funnel and tube from collector box.
10. Replace plug in collector box.
11. Remove the other plug and repeat steps 4-10.
12. Replace main door.
13. When furnace is re-started, flush condensate pump with clear water to check for proper operation before re-starting furnace.
14. Propylene glycol need not be removed before re-starting furnace.

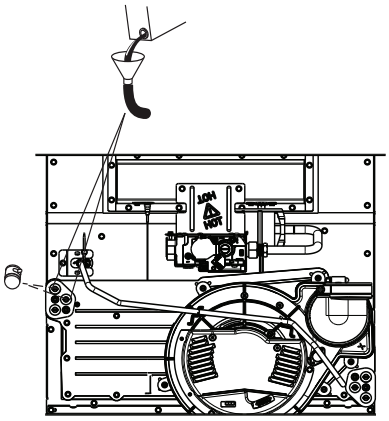

A190252

Fig. 25 – Winterizing Furnace

A CHECK-UP CHECKLIST

Your furnace represents an important investment in your family's comfort and your home's value. To keep it performing properly and to prevent future problems, have a trained service specialist give your furnace a professional check-up annually. The following checklist can be used as a guideline to proper service:

- Inspect all flue gas passages, burners, heat exchangers, coupling box(es), and inducer assembly.
- Inspect all combustion-air and vent piping inside structure and pipe terminations outside the structure.
- Check gas pipes leading to and inside of your furnace for leaks.
- Inspect and clean the blower motor and wheel.

NOTE: The inducer and blower motors are pre-lubricated and require no additional lubrication. These motors can be identified by the absence of oil ports on each end of the motor.

- Inspect and change or clean air filter(s) if necessary.
- Inspect all supply-and return-air ducts for obstructions, air leaks, and insulation. Remedy any problem when necessary.
- Inspect the return-air duct connection(s) at the furnace to ensure it is physically sound, sealed to the furnace casing, and terminates outside the space containing the furnace.
- Inspect electrical wiring, connections, and components for loose connections.
- Perform an operational checkout to determine whether your furnace is working properly and if it requires adjustments.
- Inspect all condensate drain tubes and condensate trap assembly for leaks. The condensate removal system should be cleaned annually by a qualified service agency. Refer to the Service and Maintenance Instructions Guide for further information.
- Examine the physical support of the furnace. Support should be sound with no cracks, sagging, gaps, etc. around the base.
- Check furnace for any obvious signs of deterioration.
- Ask your servicing dealer for further details about an economical service contract that covers seasonal inspections.

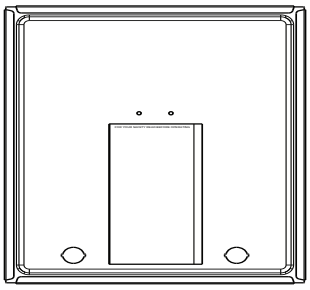

A11318

Fig. 26 – Information Booklet Location

BEFORE YOU REQUEST A "SERVICE CALL"

If your furnace is not operating or not performing properly, you may save the expense of a service call by checking a few things yourself before calling for service.

This furnace has a light emitting diode (LED) status code display to aid the installer, service technician, or homeowner while installing or servicing the unit. The LED code can be seen through the view port in the blower access panel.

NOTE: Record the LED status code BEFORE removing the blower access door or turning off 115-v power to the furnace. See the information booklet inside the main furnace door for a service code legend (see Fig. 26).

For insufficient airflow:

- Check for dirty air filter(s).
- Check for blocked return-air or supply-air grilles. Be sure they are open and unobstructed.

If problem still exists, call your dealer for service.

If furnace fails to operate:

Follow this checklist step by step, advancing to the next stop only if furnace fails to start.

- Check thermostat for proper temperature. Is thermostat set above room temperature?
- Is thermostat set to HEAT mode?
- Check fuses and circuit breakers. Is the electrical power supply switch on?
- Is the manual shut-off valve in the gas supply pipe leading to the furnace open?

NOTE: Turn off electrical supply before continuing with checklist.

- Is control switch on gas valve in ON position? (Follow start-up procedures if you must reset switch to ON position.)
- Check manual reset rollout switch located on the burner box. See Furnace Components in Fig. 1. If furnace has experienced high temperature conditions, this switch will shut off the furnace. Reset it by pushing the button on the switch. If it trips again, shut down the furnace and call for service. See "Shutting Down Your Furnace" section in this manual.
- Check for obstructions around the vent termination.

If your furnace still fails to operate, call your service representative.

For your convenience, record the furnace product and serial numbers. Should you ever require service, you will have ready access to the information needed by your service representative.

NOTE TO EQUIPMENT OWNER:

For your convenience, please record the model and serial numbers of your new equipment in the spaces provided. This information, along with the installation data and dealer contact information will be helpful should your system require maintenance or service.

FURNACE

Model # _____

Serial # _____

AIR CONDITIONER OR HEAT PUMP

Model # _____

Serial # _____

INDOOR COIL (Furnace Coil or Fan Coil)

Model # _____

Serial # _____

INSTALLATION INFORMATION:

Date Installed _____

DEALERSHIP CONTACT INFORMATION:

Company Name_____

Address_____

_____

Phone Number _____

Technician Name _____

_____

_____

NOTE TO INSTALLER:
This manual must be left with the equipment owner.

A200102

MAINTENANCE CHECKLIST

In addition to the type of routine maintenance you might be willing to perform; your furnace should be inspected regularly by a properly trained service technician.

You should work with your dealer or service technician to assure your inspection includes the following at a minimum.

DESCRIPTION	INSPECTION INTERVAL		
	Monthly	Annually Semi-Annually	
Furnace specific, external items:			
Clean or replace air filters.	X		
Inspect cabinet for signs of damage.	X		
Inspect electrical disconnect for proper function. Repair or replace as necessary.		X	
Inspect external wiring for damage.		X	
Inspect gas supply line and manual shut-off for leaks.			X
Furnace specific, internal items:			
Inspect and clean blower assembly (includes blower housing, blower wheel and motor).		X	
Inspect gas valve and check for proper manifold gas pressure. Adjust as needed.			X
Inspect ignition system and safety controls. Clean and adjust as needed.			X
Inspect control box, associated controls, wiring and connections.			X
Check combustion blower housing for lint and debris and clean as necessary.			X
Inspect burner assembly exterior for signs of damage.			X
Inspect heat exchanger - clean as needed.			X
Inspect flue system—check for proper attachment to the furnace, any dislocated sections, and for signs of damage. Replace if necessary.			X
System:			
Inspect airflow system (ductwork)—check for leaks and repair as needed.		X	
Inspect evaporator coil, drain pan and condensate drain lines as applicable. Clean as needed.		X	

This list may not include all maintenance items, and inspection interval times may vary depending on operational conditions of the furnace.

Ask your servicing dealer for further details about an economical service contract that covers seasonal inspections.

©2020 Carrier
Edition Date: 04/20
Catalog No:OM9GFSUP-02
A Carrier Company
Replaces:OM9GFSUP-01
Manufacturer reserves the right to change, at any time, specifications and designs without notice and without obligations.