915SA 95 AFUE
LEGACY LINE SINGLE-STAGE
4-WAY MULTIPOISE
CONDENSING GAS FURNACE

bryant®

Product Data

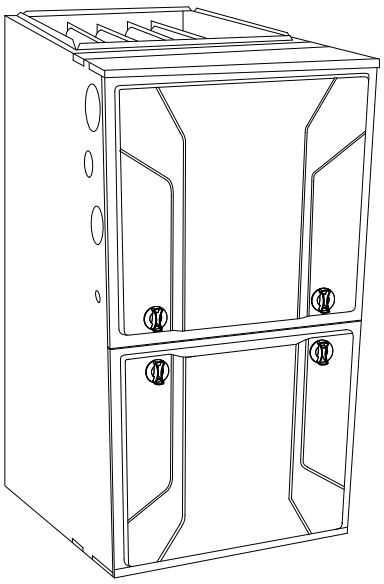

A11264

The 915S Multipoise Condensing Gas Furnace is part of the Legacy Line product offering. Sporting a PSC blower motor and an Annual Fuel Utilization Efficiency (AFUE) of 95.5%, this single-stage gas furnace provides efficient comfort for homeowners. This Legacy Line Gas Furnace also features 4-way multipoise installation flexibility, and is available in nine model sizes. The 915S can be vented for direct vent/two-pipe, ventilated combustion air, or single-pipe applications. A Bryant® Air Conditioner or Heat Pump can be used to form a complete system. All units meet California Air Quality Management District emission requirements. These furnaces are approved for Manufactured Housing (Mobile Home) applications. All sizes are design certified in Canada.

STANDARD FEATURES

- 4-way multipoise design for upflow, downflow or horizontal installation.
- Optional through-the-cabinet downflow venting.
- Installation flexibility with a 360-degree rotating elbow.
- Ideal condensing furnace height 35” cabinet: short enough for taller coils, but still allows enough room for service.
- Silicon Nitride Perfect Light™ Hot Surface Igniter.
- Aluminized-steel primary heat exchanger.
- Stainless-steel condensing secondary heat exchanger.
- High-quality corrosion-resistant prepainted steel cabinet with hemmed edges for safety.
- Factory-configured ready for upflow applications.
- Direct-vent/sealed combustion, single-pipe venting or ventilated combustion air.
- PSC blower motor, single-speed inducer motor, and single-stage gas valve.
- Self-diagnostics
- Approved for Twinning applications (30060 through 60120 sizes, only).
- Propane convertible (See accessory list).
- Approved for Manufactured Housing/Mobile Home applications (except 140,000 Btuh input) with MH accessory kit.
- Convenient Air Purifier and Humidifier connections.
- Residential installations may be eligible for consumer financing through the Retail Credit Program.
- Certified to leak 2% or less of nominal air conditioning CFM delivered when pressurized to 1-inch water column with all present air inlets, air outlets, and condensate drain port(s) are sealed.

LEGACY LINE

Certified System ISO 9001 QMI-SAI Global

AHRI CERTIFIED™ www.ahridirectory.org

Use of the AHRI Certified ™ Mark indicates a manufacturer’s participation in the program. For verification of certification for individual products, go to www.ahridirectory.org.

DESIGN CERTIFIED®

CERTIFIED®

SAP ORDERING NO.	CASING DIMENSIONS (IN.)			RATED HEATING OUTPUT†		HEATING AIRFLOW		COOLING CFM @ 0.5 ESP (in. W.C.)	MOTOR HP - SPEED	APPROX. SHIP WEIGHT	
	H	D	W	(BTUH)	AFUE	CFM‡	Heating ESP (in. W.C.)			(LB)	(KG)
915SA30040S14	35	29.5	14.2	39,000	95.5%	820	0.10	625 - 905	1/2 - 4	123	55.8
915SA36040S17	35	29.5	17.5	39,000	95.5%	1000	0.10	650 - 1050	1/2 - 5	134	60.8
915SA30060S14	35	29.5	14.2	58,000	95.5%	840	0.12	675 - 1130	1/2 - 4	127	57.6
915SA42060S17	35	29.5	17.5	58,000	95.5%	980	0.12	650 - 1420	1/2 - 5	144	65.3
915SA48080S17	35	29.5	17.5	78,000	95.5%	1040	0.15	810 - 1600	3/4 - 5	154	69.9
915SA60080S21	35	29.5	21.0	78,000	95.5%	1695	0.15	1335 - 1970	1 - 5	162	73.5
915SA42100S21	35	29.5	21.0	97,000	95.5%	1510	0.20	915 - 1545	1/2 - 4	169	76.7
915SA60100S21	35	29.5	21.0	97,000	95.5%	1680	0.20	1345 - 2065	1 - 5	169	76.7
915SA60120S24	35	29.5	24.5	117,000	95.5%	2245	0.20	1320 - 2105	1 - 5	186	84.4
915SA60140S24	35	29.5	24.5	135,000	95.5%	2175	0.20	1290 - 2035	1 - 5	190	86.2

† Capacity in accordance with DOE test procedures. Ratings are position dependent. See rating plate.
‡ Heating CFM at factory default blower motor heating tap settings.
ESP – External Static Pressure

FEATURES AND BENEFITS

HYBRID HEAT® Dual Fuel system — This system can provide more control over your monthly energy bills by automatically selecting the most economical method of heating. With HYBRID HEAT, our system automatically switches between the gas furnace and the single-stage electric heat pump as outside temperatures change to maintain greater efficiency and comfort than with any traditional single-source heating system. The heat pump also delivers high-efficiency cooling in the summer.

Power Heat™ Igniter — Bryant's unique SiN igniter is not only physically robust but it is also electrically robust. It is capable of running at line voltage and does not require complex voltage regulators as do other brands. This unique feature further enhances the gas furnace reliability and continues Bryant's tradition of technology leadership and innovation in providing a reliable and durable product.

Reliable Heat Exchanger Design — The aluminized steel, clam shell primary heat exchanger was re-engineered to achieve greater efficiency out of a smaller size. The first two passes of the heat exchanger are based on the current 80% product, a design with more than ten years of field-proven performance and success. These innovations, paired with the continuation of a crimped, no-weld seam create an efficient, robust design for this essential component.

The condensing heat exchanger, a stainless steel fin and tube design, is positioned in the furnace to extract additional heat. Stainless steel coupling box componentry between heat exchangers has exceptional corrosion resistance in both natural gas and propane applications.

4-Way Multipoise Design — One model for all applications – there is no need to stock special downflow or horizontal models when one unit will do it all. The new heat exchanger design allows these units to achieve the certified AFUE in all positions.

Direct or Single-pipe Venting, or Optional Ventilated Combustion Air — This furnace can be installed as a 2-pipe (Direct Vent) furnace, in an optional ventilated combustion air application, or in single-pipe, non-direct vent applications. This provides added flexibility to meet diverse installation needs.

Sealed Combustion System — This furnace brings in combustion air from outside the furnace, which results in especially quiet operation. By sealing the entire combustion vestibule, the entire furnace can be made quieter, not just the sound of the burners.

Monoport Burners — The burners are specially designed and finely tuned for smooth, quiet combustion and economical operation.

Bottom Closure — Factory-installed for side return; easily removable for bottom return. The multi-use bottom closure can also serve for roll-out protection in horizontal applications, and act as the bottom closure for the optional return air base accessory.

Blower Access Panel Switch — Automatically shuts off 115-v power to furnace whenever blower access panel is opened.

Quality Registration — Our furnaces are engineered and manufactured under an ISO 9001 registered quality system.

Certifications — This furnace is CSA (AGA and CGA) design certified for use with natural and propane gases. The furnace is factory-shipped for use with natural gas. A CSA listed gas conversion kit is required to convert furnace for use with propane gas. The efficiency is AHRI efficiency rating certified. This furnace meets California Air Quality Management District emission requirements.

SPECIFICATIONS

Heating Capacity and Efficiency			30040	36040	30060	42060	48080	60080	42100	60100	60120	60140
Input	High Heat	(BTUH)	40,000	40,000	60,000	60,000	80,000	80,000	100,000	100,000	120,000	140,000
Output	High Heat	(BTUH)	39,000	39,000	58,000	58,000	78,000	78,000	97,000	97,000	117,000	135,000
Efficiency	AFUE % (ICS)		95.5	95.5	95.5	95.5	95.5	95.5	95.5	95.5	95.5	95.5
Certified Temperature Rise Range ºF (ºC)		High Heat	40 - 70 (22 - 39)	35 - 65 (19 - 36)	40 - 70 (22 - 39)	40 - 70 (22 - 39)	40 - 70 (22 - 39)	40 - 70 (22 - 39)	40 - 70 (22 - 39)	40 - 70 (22 - 39)	40 - 70 (22 - 39)	45 - 75 (25 - 42)

Airflow Capacity and Blower Data		30040	36040	30060	42060	48080	60080	42100	60100	60120	60140
Rated External Static Pressure (in. w.c.)	Heating	0.10	0.10	0.12	0.12	0.15	0.15	0.20	0.20	0.20	0.20
	Cooling	0.5	0.5	0.5	0.5	0.5	0.5	0.5	0.5	0.5	0.5
Airflow Delivery @ Rated ESP (CFM)	High Heat	820	1000	840	980	1040	1695	1510	1680	2245	2175
	Cooling	905	1050	1130	1420	1600	1970	1545	2065	2105	2035
Cooling Capacity (tons)	CFM/ton	2	2.5	2.5	3.5	4	5	4	5	5	5
	CFM/ton	2.5	3	3	4	4.5	5.5	4.5	6	6	6
Direct-Drive Motor Type		Permanent Split Capacitor (PSC)									
Direct-Drive Motor HP		0.5	.5	0.5	0.5	0.75	1	0.5	1	1	1
Motor Full Load Amps		6.2	6.8	6.2	6.8	7.9	13.8	6.5	13.8	14.1	14.1
RPM Range		500-1150									
Speed Selections		4	5	4	5	5	5	4	5	5	5
Blower Wheel Dia x Width	in.	11 x 7	11 x 8	11 x 7	11 x 8	11 x 8	11 x 10	11 x 10	11 x 10	11 x 11	11 x 11
Air Filtration System		Field Supplied									
Filter Used for Certified Watt Data*		KGAWF**06UFR									

Electrical Data		30040	36040	30060	42060	48080	60080	42100	60100	60120	60140
Input Voltage	Volts-Hertz-Phase	115-60-1									
Operating Voltage Range	Min-Max	104-127									
Maximum Input Amps	Amps	6.8	8.3	7.0	8.4	9.6	14.5	7.6	14.6	14.9	14.9
Unit Ampacity	Amps	9.5	11.4	9.7	11.5	13.0	19.1	10.4	19.2	19.6	19.6
Minimum Wire Size	AWG	14	14	14	14	14	12	14	12	12	12
Maximum Wire Length @ Minimum Wire Size	Feet	39	32	38	32	28	30	35	29	29	29
	(M)	(11.9)	(9.8)	(11.6)	(9.8)	(8.5)	(9.1)	(10.7)	(8.8)	(8.8)	(8.8)
Maximum Fuse/Ckt Bkr (Time-Delay Type Recommended)	Amps	15	15	15	15	15	20	15	20	20	20
Transformer Capacity (24vac output)		40 VA									
External Control Power Available	Heating	27.9 VA									
	Cooling	34.6 VA									

Controls		30040	36040	30060	42060	48080	60080	42100	60100	60120	60140
Gas Connection Size		1/2" - NPT									
Burners (Monoport)		2	2	3	3	4	4	5	5	6	7
Gas Valve (Redundant)	Manufacturer	White Rodgers									
Minimum Inlet Gas pressure (in. wc)		4.5									
Maximum Inlet Gas pressure (in. wc)		13.6									
Gas Conversion Kit - Natural to Propane		KGANP50011SP									
Gas Conversion Kit - Propane to Natural		KGAPN42011SP									
Manufactured (Mobile) Home Kit		KGAMH0601KIT									
Ignition Device		Silicon Nitride									
Limit Control		165	180	165	180	170	200	180	180	160	155
Heating Blower Control (Heating Off-Delay)		Adjustable: 90, 120, 150, 180 seconds									
Cooling Blower Control (Time Delay Relay)		90 seconds									
Communication System		*none*									
Thermostat Connections		Com 24V, R, W, G, Y									
Accessory Connections		EAC (115vac); HUM (24vac)									

* See Accessory List for part numbers available.

MODEL NUMBER NOMENCLATURE

Example of a Model Number

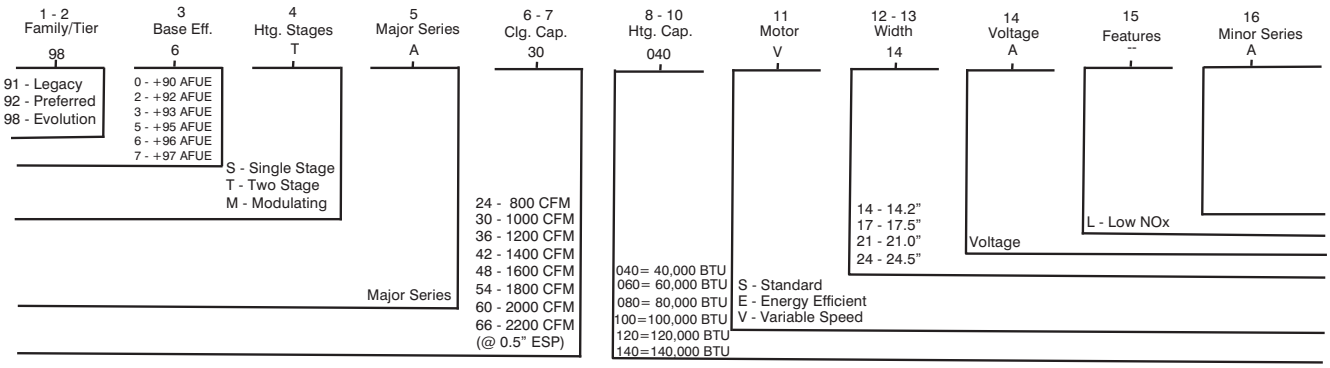

Not all familes have these models.

A12374

915SA

FURNACE COMPONENTS

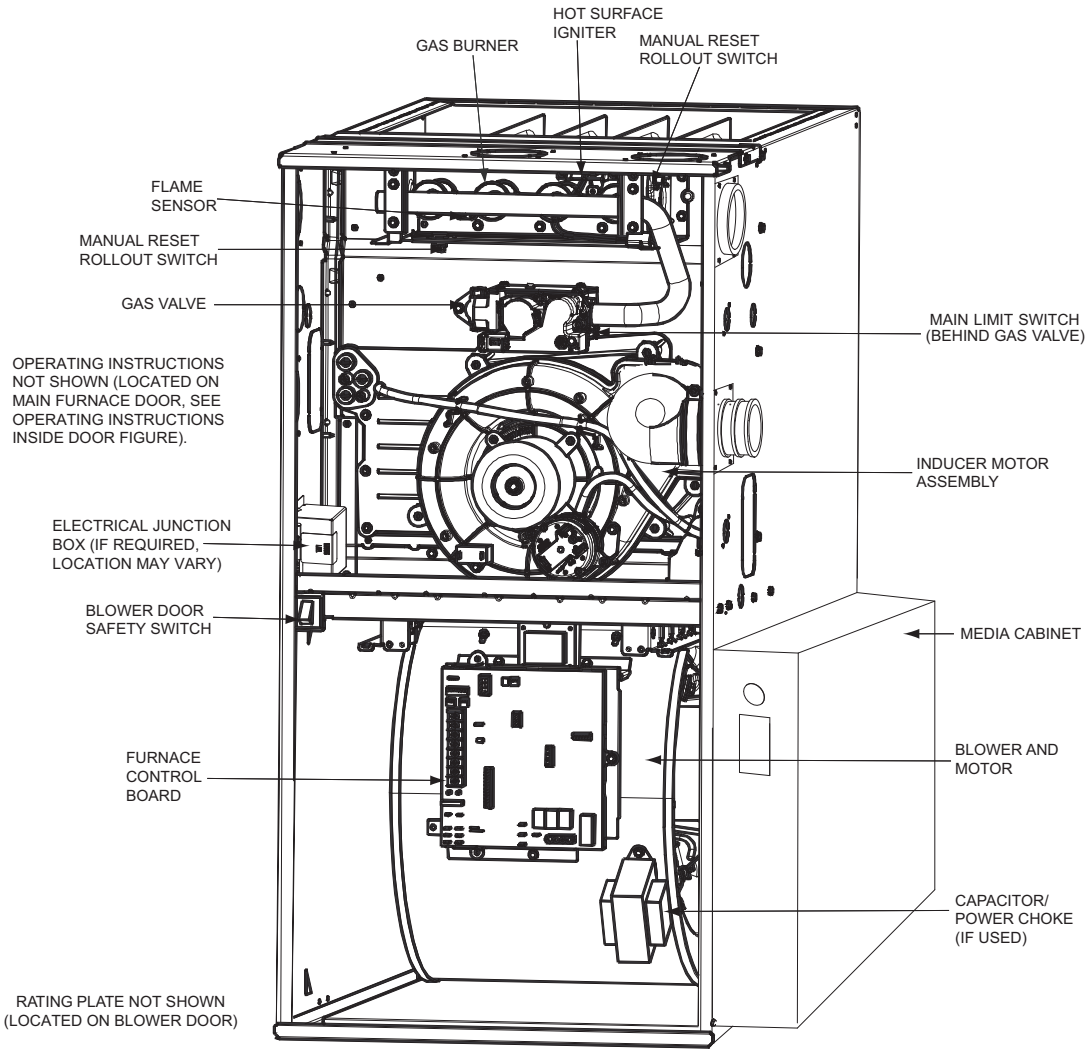

REPRESENTATIVE DRAWING ONLY, SOME MODELS MAY VARY IN APPEARANCE.

A11408

ACCESSORIES

DESCRIPTION	PART NUMBER	30040	30060	36040	42060	48080	60080	42100	60100	60120	60140
Venting Accessories											
Vent Kit - Through the Cabinet	KGADC0101BVC	●	●	●	●	●	●	●	●	●	●
Vent Terminal - Concentric - 2” (51 mm)	KGAVT0701CVT	See Venting Tables									
Vent Terminal - Concentric - 3” (76 mm)	KGAVT0801CVT										
Vent Terminal Bracket - 2” (51 mm)	KGAVT0101BRA										
Vent Terminal Bracket - 3” (76 mm)	KGAVT0201BRA										
Vent Kit – Rubber Coupling	KGAAC0101RVC	See Venting Tables									
Condensate Drainage Accessories											
Freeze Protect Kit - Heat Tape	KGAHT0101CFP	●	●	●	●	●	●	●	●	●	●
CPVC to PVC Drain Adapters - 1/2” CPVC to 3/4” PVC	KGAAD0110PVC	●	●	●	●	●	●	●	●	●	●
Horizontal Trap Grommet - Direct Vent	KGACK0101HCK	All DV Horizontal									
Condensate Neutralizer Kit	P908–0001	●	●	●	●	●	●	●	●	●	●
External Trap Kit	KGAET0201ETK	●	●	●	●	●	●	●	●	●	●
Ductwork Adapter Accessories											
Furnace Base Kit for Combustible Floors	KGASB0201ALL	●	●	●	●	●	●	●	●	●	●
Coil Adapter Kits – No Offset	KGADA0101ALL	●	●	●	●	●	●	●	●	●	●
Coil Adapter Kits – Single Offset	KGADA0201ALL	●	●	●	●	●	●	●	●	●	●
Coil Adapter Kits – Double Offset	KGADA0301ALL	●	●	●	●	●	●	●	●	●	●
Return Air Base (Upflow Applications) 14.0–in. wide	KGARP0301B14	●	●								
Return Air Base (Upflow Applications) 17.5–in. wide	KGARP0301B17			●	●	●					
Return Air Base (Upflow Applications) 21.0–in. wide	KGARP0301B21						●	●	●		
Return Air Base (Upflow Applications) 24.5–in. wide	KGARP0301B24									●	●
IAQ Device Duct Adapters 20.0–in. IAQ to 16 in. Side Return	KGAAD0101MEC	20”x25” IAQ Devices									
IAQ Device Duct Adapters 24.0–in. IAQ to 16 in. Side Return	KGAAD0201MEC	24”x25” IAQ Devices									
Gas Conversion Accessories											
Mobile Home Kit	KGAMH0601KIT	●	●	●	●	●	●	●	●	●	
Gas Conversion Kit - Nat to LP	KGANP50011SP	●	●	●	●	●	●	●	●	●	●
Gas Conversion Kit - LP to Nat	KGAPN42011SP	●	●	●	●	●	●	●	●	●	●
Gas Orifice Kit - #42 (Nat Gas)	LH32DB207	●	●	●	●	●	●	●	●	●	●
Gas Orifice Kit - #43 (Nat Gas)	LH32DB202	●	●	●	●	●	●	●	●	●	●
Gas Orifice Kit - #44 (Nat Gas)	LH32DB200	●	●	●	●	●	●	●	●	●	●
Gas Orifice Kit - #45 (Nat Gas)	LH32DB205	●	●	●	●	●	●	●	●	●	●
Gas Orifice Kit - #46 (Nat Gas)	LH32DB208	●	●	●	●	●	●	●	●	●	●
Gas Orifice Kit - #47 (Nat Gas)	LH32DB078	●	●	●	●	●	●	●	●	●	●
Gas Orifice Kit - #48 (Nat Gas)	LH32DB076	●	●	●	●	●	●	●	●	●	●
Gas Orifice Kit - #54 (LP)	LH32DB203	●	●	●	●	●	●	●	●	●	●
Gas Orifice Kit - #55 (LP)	LH32DB201	●	●	●	●	●	●	●	●	●	●
Gas Orifice Kit - #56 (LP)	LH32DB206	●	●	●	●	●	●	●	●	●	●
Gas Orifice Kit - 1.25mm (LP)	LH32DB209	●	●	●	●	●	●	●	●	●	●
Gas Orifice Kit - 1.30mm (LP)	LH32DB210	●	●	●	●	●	●	●	●	●	●
Control Accessories											
Twinning Kit	KGATW0701HSI		●		●	●	●	●	●	●	
IAQ Accessories											
Filter Rack – Side Return for 1” Filters	KGAFR0801SRE	●	●	●	●	●	●	●	●	●	●
Filter Rack – Bottom Return for 1” Filters – 14.2” wide	KGBFR0401B14	●	●	●	●	●	●	●	●	●	●
Filter Rack – Bottom Return for 1” Filters – 17.5” wide	KGBFR0501B17	●	●	●	●	●	●	●	●	●	●
Filter Rack – Bottom Return for 1” Filters – 21.0” wide	KGBFR0601B21	●	●	●	●	●	●	●	●	●	●
Filter Rack – Bottom Return for 1” Filters – 24.5” wide	KGBFR0701B24	●	●	●	●	●	●	●	●	●	●
Filter Pack (6 pack) – Washable - 16x25x1	KGAWF1306UFR	●	●	●	●	●	●	●	●	●	●
Filter Pack (6 pack) – Washable - 24x25x1	KGAWF1506UFR	●	●	●	●	●	●	●	●	●	●
EZ-Flex Filter - 16” (406 mm)	EXPXXFIL0016	Use with EZXCAB–1016									
EZ-Flex Filter - 20” (508 mm)	EXPXXFIL0020	Use with EZXCAB–1020									
EZ-Flex Filter - 24” (610 mm)	EXPXXFIL0024	Use with EZXCAB–1024									
EZ-Flex Filter with End Caps - 16” (406 mm)	EXPXXUNV0016	Use with EZXCAB–1016									
EZ-Flex Filter with End Caps - 20” (508 mm)	EXPXXUNV0020	Use with EZXCAB–1020									
EZ-Flex Filter with End Caps - 24” (610 mm)	EXPXXUNV0024	Use with EZXCAB–1024									
Cartridge Media Filter - 16” (406 mm)	FILXXCAR0016	Use with FILCABXL–1016									
Cartridge Media Filter - 20” (508 mm)	FILXXCAR0020	Use with FILCABXL–1020									
Cartridge Media Filter - 24” (610 mm)	FILXXCAR0024	Use with FILCABXL–1024									
EZ Flex Cabinet Side or Bottom Return 4” Filters – 16”	EZXCABCC0016	●	●	●	●	●					
EZ Flex Cabinet Side or Bottom Return 4” Filters – 20”	EZXCABCC0020	●	●	●	●	●	●	●	●		
EZ Flex Cabinet Side or Bottom Return 4” Filters – 24”	FILCABXL0024									●	●

● = Used with the model furnace

915SA

AIR DELIVERY - CFM (BOTTOM RETURN WITH FILTER)

UNIT SIZE	RETURN-AIR CONNECTION	SPEED TAPS [2]	EXTERNAL STATIC PRESSURE (IN. W.C.) [6]									
			0.1	0.2	0.3	0.4	0.5	0.6	0.7	0.8	0.9	1.0
030040	SIDE/BOTTOM	Black	1100	1055	1010	960	**905**	**850**	**795**	**740**	**685**	**620**
		Yellow	955	915	875	830	790	740	695	645	590	**530**
		Blue	820	795	765	730	695	655	615	570	515	**460**
		Red	730	710	680	655	625	595	555	515	465	**400**
036040	SIDE/BOTTOM	Black	1245	1195	1150	1100	1050	**1000**	**945**	**890**	**830**	**775**
		Yellow	1165	1120	1075	1030	980	925	870	815	760	710
		Orange	1045	1015	965	925	885	840	790	740	695	640
		Blue	1000	960	930	890	850	810	765	715	665	615
		Red	735	725	700	680	650	625	590	555	515	**470**
030060	SIDE/BOTTOM	Black	1340	1295	1245	1190	1130	1065	1005	**895**	**815**	**725**
		Yellow	1035	1010	980	945	910	865	795	730	665	605
		Blue	845	825	810	785	755	710	670	625	570	515
		Red [5]	770	750	730	710	675	640	600	560	510	**455**
042060	SIDE/BOTTOM	Black	1665	1615	1550	1485	1420	1345	1270	1190	1105	**985**
		Yellow	1340	1320	1295	1260	1215	1165	1110	1045	925	850
		Orange	1050	1045	1035	1015	995	960	915	845	785	725
		Blue	985	980	975	950	930	900	845	795	740	690
		Red [5]	735	720	700	675	650	620	595	560	**520**	**480**
048080	SIDE/BOTTOM	Black	1870	1810	1740	1670	1600	1525	1440	**1355**	**1270**	**1180**
		Yellow	1525	1495	1460	1415	1365	1305	1240	1170	1090	990
		Orange	1375	1355	1330	1300	1260	1210	1155	1090	1025	940
		Blue	1045	1040	1030	1010	985	960	920	875	825	745
		Red [5]	880	865	850	835	810	785	750	715	665	605
060080	BOTTOM or TWO-SIDES [3,4]	Black	2360	2250	**2160**	**2065**	**1970**	**1880**	**1785**	**1685**	**1580**	**1455**
		Yellow	2100	2030	1960	1885	1805	1720	1635	1545	1440	1305
		Orange	1840	1810	1765	1725	1665	1590	1515	1430	1335	1240
		Blue	1705	1685	1660	1615	1570	1510	1445	1370	1280	1135
		Red	1425	1410	1385	1365	1335	1290	1245	1190	1120	1050
042100	SIDE/BOTTOM	Black	1750	1705	1660	1605	1545	1475	1405	1305	1220	1140
		Blue	1550	1510	1470	1430	1380	1320	1245	1170	1095	1015
		Yellow [5]	1290	1255	1220	1180	1130	1075	1020	960	885	800
		Red [5]	1085	1045	1010	960	915	865	805	740	665	595
060100	BOTTOM or TWO-SIDES [3,4]	Black	2415	2330	**2245**	**2155**	**2065**	**1965**	**1865**	**1760**	**1645**	**1530**
		Yellow	2130	2075	2010	1945	1865	1785	1695	1600	1490	1375
		Orange	1830	1815	1785	1740	1685	1625	1550	1470	1370	1255
		Blue	1690	1680	1655	1620	1580	1530	1465	1385	1295	1185
		Red	1415	1405	1390	1370	1345	1305	1260	1200	1125	1050
060120	BOTTOM or TWO-SIDES [3,4]	Black	2440	2360	**2295**	**2215**	**2105**	**1975**	**1815**	**1710**	**1575**	**1405**
		Blue	2300	2245	2185	2090	2005	1855	1745	1635	1505	**1370**
		Yellow	1805	1780	1750	1705	1650	1595	1515	1430	1330	1230
		Orange [5]	1560	1550	1535	1505	1470	1420	1360	1285	1205	1130
		Red [5]	1390	1385	1370	1345	1320	1285	1230	1175	1105	1035
060140	BOTTOM or TWO-SIDES [3,4]	Black	**2410**	**2325**	**2230**	**2135**	**2035**	**1930**	**1820**	**1700**	**1575**	**1445**
		Blue	2250	2175	2100	2020	1930	1825	1715	1600	1485	**1370**
		Yellow [5]	1740	1725	1700	1660	1610	1550	1470	1390	1295	1190
		Orange [5]	1500	1495	1485	1465	1435	1390	1335	1265	1185	1090
		Red [5]	1350	1345	1335	1315	1290	1255	1210	1150	1080	995

NOTE:

1. A filter is required for each return–air inlet. Airflow performance includes a 3/4–in. (19 mm) washable filter media such as contained in a factory–authorized accessory filter rack. See accessory list. To determine airflow performance without this filter, assume an additional 0.1 in. w.c.. available external static pressure.
2. Blower speed taps are not always in the same order. Factory default blower connections are as follows:
   a. Heating airflow – BLUE (also used for Continuous Fan)
   b. Cooling airflow – BLACK (enabled when the Y terminal is energized)
   ADJUST THE BLOWER SPEED TAPS AS NECESSARY FOR THE PROPER AIR TEMPERATURE RISE FOR EACH INSTALLATION.
3. Airflows over 1800 CFM require bottom return, two–side return, or bottom and side return. A minimum filter size of 20" x 25" (508 x 635 mm) is required.
4. For upflow applications, air entering from one side into both the side of the furnace and a return air base counts as a side and bottom return.
5. Highlighted areas indicate that this airflow range is beyond the range allowed for heating. **THESE AIRFLOW RANGES MAY ONLY BE USED FOR COOLING.**
6. All airflows that are shown in **BOLD** exceed 0.58 watts per CFM at the given external static pressure.

MAXIMUM EQUIVALENT VENT LENGTH - FT. (M)

Table 1 – Maximum Equivalent Vent Length - Ft. (M)
0 to 4500 Ft. (0 to 1370 M) Altitude

NOTE: Maximum Equivalent Vent Length (MEVL) includes standard and concentric vent termination and does NOT include elbows. Use Table 2 - Deductions from Maximum Equivalent Vent Length to determine allowable vent length for each application.

Altitude FT (M)	Unit Size BTU/Hr	DIRECT VENT (2-PIPE) AND NON-DIRECT VENT (1-PIPE)									
		Vent Pipe Diameter (in.) [1]									
		1-1/2		2		2-1/2		3		4	
0 to 2000 (0 to 610)	40,000 [3]	50	(15.2)	210	(64.0)	250	(76.2)	NA [2]		NA	
	60,000	30	(9.1)	135	(41.1)	235	(71.6)	265	(80.8)	NA	
	80,000	20	(6.1)	70	(21.3)	175	(53.3)	235	(71.6)	265	(80.8)
	100,000	NA		25	(7.6)	110	(33.5)	235	(71.6)	265	(80.8)
	120,000	NA		NA		15	(4.6)	100	(30.5)	250	(76.2)
	140,000 [4]	NA		NA		10	(3.0)	90	(27.4)	210	(64.0)
2001 to 3000 (610 to 914)	40,000	45	(13.7)	198	(60.4)	232	(70.7)	NA		NA	
	60,000	27	(8.2)	127	(38.7)	222	(67.7)	250	(76.2)	NA	
	80,000	17	(5.2)	64	(19.5)	165	(50.3)	222	(67.7)	249	(75.9)
	100,000	NA		22	(6.7)	104	(31.7)	223	(68.0)	250	(76.2)
	120,000	NA		NA		11	(3.4)	93	(28.3)	237	(72.2)
	140,000 [4]	NA		NA		NA		80	(24.4)	185	(56.4)
3001 to 4000 (914 to 1219)	40,000	39	(11.9)	184	(56.1)	214	(65.2)	NA		NA	
	60,000	23	(7.0)	119	(36.3)	210	(64.0)	235	(71.6)	NA	
	80,000	15	(4.6)	59	(18.0)	155	(47.2)	210	(64.0)	232	(70.7)
	100,000	NA		19	(5.8)	98	(29.9)	211	(64.3)	236	(71.9)
	120,000	NA		NA		8	(2.4)	86	(26.2)	224	(68.3)
	140,000 [4]	NA		NA		NA		79	(24.1)	158	(48.2)
4001 to 4500 (1219 to 1370)	40,000	36	(11.0)	177	(53.9)	205	(62.5)	NA		NA	
	60,000	21	(6.4)	115	(35.1)	204	(62.2)	228	(69.5)	NA	
	80,000	14	(4.3)	56	(17.1)	150	(45.7)	202	(61.6)	224	(68.3)
	100,000	NA		17	(5.2)	94	(28.7)	205	(62.5)	229	(69.8)
	120,000	NA		NA		NA		83	(25.3)	217	(66.1)
	140,000 [4]	NA		NA		NA		69	(21.0)	146	(44.5)

NOTES: See notes at end of venting tables.
See Table 3 for altitudes over 4500 ft. (1370 M)

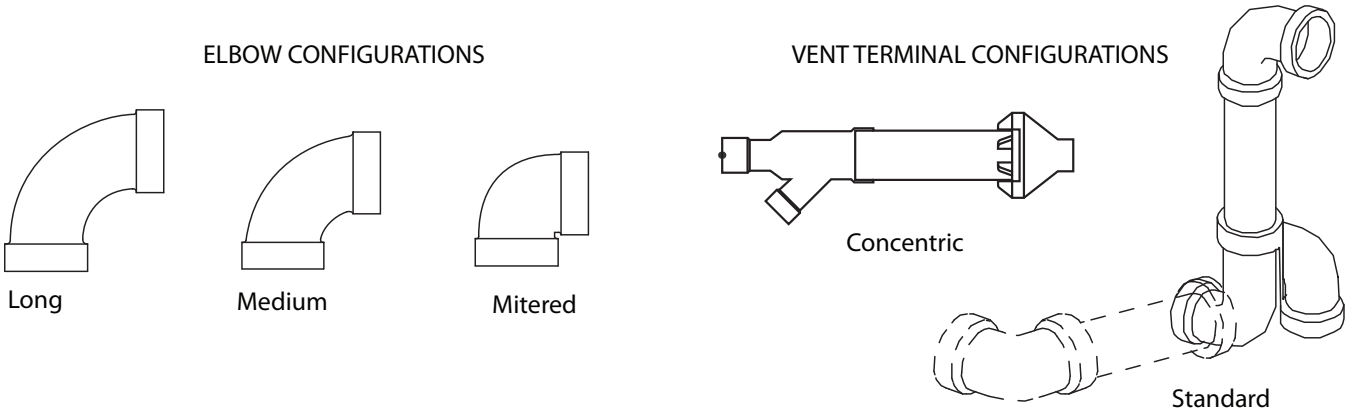

Table 2 – Deductions from Maximum Equivalent Vent Length - Ft. (M)

Pipe Diameter (in):	1-1/2		2		2-1/2		3		4	
Mitered 90º Elbow	8	(2.4)	8	(2.4)	8	(2.4)	8	(2.4)	8	(2.4)
Medium Radius 90º Elbow	5	(1.5)	5	(1.5)	5	(1.5)	5	(1.5)	5	(1.5)
Long Radius 90º Elbow	3	(0.9)	3	(0.9)	3	(0.9)	3	(0.9)	3	(0.9)
Mitered 45º Elbow	4	(1.2)	4	(1.2)	4	(1.2)	4	(1.2)	4	(1.2)
Medium Radius 45º Elbow	2.5	(0.8)	2.5	(0.8)	2.5	(0.8)	2.5	(0.8)	2.5	(0.8)
Long Radius 45º Elbow	1.5	(0.5)	1.5	(0.5)	1.5	(0.5)	1.5	(0.5)	1.5	(0.5)
Tee	16	(4.9)	16	(4.9)	16	(4.9)	16	(4.9)	16	(4.9)
Concentric Vent Termination	NA		0	(0.0)	NA		0	(0.0)	NA	
Standard Vent Termination	0	(0.0)	0	(0.0)	0	(0.0)	0	(0.0)	0	(0.0)

Venting System Length Calculations

The Total Equivalent Vent Length (TEVL) for **EACH** combustion air or vent pipe equals the length of the venting system, plus the equivalent length of elbows used in the venting system from Table 2.

Standard vent terminations or factory accessory concentric vent terminations count for zero deduction.

See vent system manufacturer's data for equivalent lengths of flexible vent pipe or other termination systems. **DO NOT ASSUME** that one foot of flexible vent pipe equals one foot of straight PVC/ABS DWV vent pipe.

Compare the Total Equivalent Vent Length to the Maximum Equivalent Vent Lengths in Tables 1 and 3.

Example 1

A direct-vent 60,000 Btuh furnace installed at 2100 ft. (640 M). Venting system includes, **FOR EACH PIPE**, 100 feet (30 M) of vent pipe, 95 feet (28 M) of combustion air inlet pipe, (3) 90° long radius elbows, (2) 45° long radius elbows and a factory accessory concentric vent kit.

Can this application use 2-in. (50 mm ND) PVC/ABS DWV vent piping?

Measure the required linear length of air inlet and vent pipe; insert the longest of the two here:					100 ft	Use length of the longer of the vent or air inlet piping system
Add equiv length of (3) 90º long-radius elbows (use the highest number of elbows for either the vent or inlet pipe)	3	x	3 ft	=	9 ft.	From Table 2
Add equiv length of (2) 45º long-radius elbows (use the highest number of elbows for either the vent or inlet pipe)	2	x	1.5 ft	=	3 ft.	From Table 2
Add equiv length of vent termination					0 ft.	From Table 2
Add correction for flexible vent pipe, if any					0 ft.	From Vent Manufacturer's instructions; zero for PVC/ABS DWV
Total Equivalent Vent Length (TEVL)					112 ft.	Add all of the above lines
Maximum Equivalent Vent Length (MEVL)					127 ft.	For 2" pipe from Table 1
Is TEVL less than MEVL?					**YES**	**Therefore, 2" pipe may be used**

Example 2

A direct-vent 60,000 Btuh furnace installed at 2100 ft. (640 M) Venting system includes, **FOR EACH PIPE**, 100 feet (30 M) of vent pipe, 95 feet (28 M) of combustion air inlet pipe, (3) 90° long radius elbows, and a polypropylene concentric vent kit. Also includes 20 feet (6 M) of flexible polypropylene vent pipe, included within the 100 feet (30 M) of vent pipe.

Assume that one meter of flexible 60 mm or 80 mm polypropylene pipe equals 2.0 Meters of PVC/ABS pipe. **VERIFY FROM VENT MANUFACTURER'S INSTRUCTIONS.**

Can this application use 60 mm (O.D.) polypropylene vent piping? If not what size piping can be used?

Measure the required linear length of air inlet and vent pipe; insert the longest of the two here:					100 ft	Use length of the longer of the vent or air inlet piping system
Add equiv length of (3) 90º long-radius elbows (use the highest number of elbows for either the vent or inlet pipe)	3	x	3 ft	=	9 ft.	From Vent Manufacturer's instructions
Add equiv length of (2) 45º long-radius elbows (use the highest number of elbows for either the vent or inlet pipe)	0	x		=	0 ft.	From Vent Manufacturer's instructions
Add equiv length of vent termination	9 M	x	3 ft/M	=	18 ft.	From Vent Manufacturer's instructions
Add correction for flexible vent pipe, if any	1.8	x	20 ft	=	36 ft.	From Vent Manufacturer's instructions
Total Equivalent Vent Length (TEVL)					163 ft.	Add all of the above lines
Maximum Equivalent Vent Length (MEVL)					127 ft.	For 2" pipe from Table 1
Is TEVL less than MEVL?					**NO**	**Therefore, 60mm pipe may NOT be used; try 80 mm**
Maximum Equivalent Vent Length (MEVL)					250 ft.	For 3" pipe from Table 1
Is TEVL less than MEVL?					**YES**	**Therefore, 80 mm pipe may be used**

MAXIMUM EQUIVALENT VENT LENGTH - FT. (M) (CONTINUED)

Table 3 – Maximum Equivalent Vent Length - Ft. (M)
4501 to 10,000 Ft. (0 to 1370 M) Altitude

NOTE: Maximum Equivalent Vent Length (MEVL) includes standard and concentric vent termination and does NOT include elbows. Use Table 2 - Deductions from Maximum Equivalent Vent Length to determine allowable vent length for each application.

Altitude FT (M) [5]	Unit Size	DIRECT VENT (2-PIPE) AND SINGLE-PIPE									
		Vent Pipe Diameter (in.) [1]									
		1-1/2		2		2-1/2		3		4	
4501 to 5000 (1370 to 1524)	40,000	33	(10.1)	171	(52.1)	196	(59.7)	NA [2]		NA	
	60,000	20	(6.1)	111	(33.8)	198	(60.4)	221	(67.4)	NA	
	80,000	13	(4.0)	54	(16.5)	146	(44.5)	195	(59.4)	216	(65.8)
	100,000	NA		16	(4.9)	91	(27.7)	200	(61.0)	222	(67.7)
	120,000	NA		NA		NA		80	(24.4)	211	(64.3)
	140,000 [4]	NA		NA		NA		60	(18.3)	134	(40.8)
5001 to 6000 (1524 to 1829)	40,000	27	(8.2)	158	(48.2)	179	(54.6)	NA		NA	
	60,000	16	(4.9)	103	(31.4)	186	(56.7)	207	(63.1)	NA	
	80,000	11	(3.4)	49	(14.9)	137	(41.8)	183	(55.8)	200	(61.0)
	100,000	NA		12	(3.7)	85	(25.9)	188	(57.3)	208	(63.4)
	120,000	NA		NA		NA		74	(22.6)	199	(60.7)
	140,000 [4]	NA		NA		NA		50	(15.2)	109	(33.2)
6001 to 7000 (1829 to 2134)	40,000	21	(6.4)	145	(44.2)	162	(49.4)	NA		NA	
	60,000	13	(4.0)	96	(29.3)	174	(53.0)	194	(59.1)	NA	
	80,000	NA		44	(13.4)	120	(36.6)	171	(52.1)	185	(56.4)
	100,000	NA		10	(3.0)	79	(24.1)	178	(54.3)	195	(59.4)
	120,000	NA		NA		NA		68	(20.7)	187	(57.0)
	140,000 [4]	NA		NA		NA		41	(12.5)	87	(26.5)
7001 to 8000 (2134 to 2438)	40,000	15	(4.6)	133	(40.5)	146	(44.5)	NA		NA	
	60,000	10	(3.0)	89	(27.1)	163	(49.7)	181	(55.2)	NA	
	80,000	NA		40	(12.2)	120	(36.6)	159	(48.5)	170	(51.8)
	100,000	NA		NA		73	(22.3)	167	(50.9)	182	(55.5)
	120,000	NA		NA		NA		62	(18.9)	175	(53.3)
	140,000 [4]	NA		NA		NA		32	(9.8)	63	(19.2)
8001 to 9000 (2438 to 2743)	40,000	10	(3.0)	121	(36.9)	130	(39.6)	NA		NA	
	60,000	7	(2.1)	82	(25.0)	152	(46.3)	168	(51.2)	NA	
	80,000	NA		35	(10.7)	111	(33.8)	148	(45.1)	156	(47.5)
	100,000	NA		NA		67	(20.4)	157	(47.9)	170	(51.8)
	120,000	NA		NA		NA		56	(17.1)	164	(50.0)
	140,000 [4]	NA		NA		NA		23	(7.0)	42	(12.8)
9001 to 10,000 (2743 to 3048)	40,000	5	(1.5)	110	(33.5)	115	(35.1)	NA		NA	
	60,000	NA		76	(23.2)	142	(43.3)	156	(47.5)	NA	
	80,000	NA		31	(9.4)	103	(31.4)	137	(41.8)	142	(43.3)
	100,000	NA		NA		62	(18.9)	147	(44.8)	157	(47.9)
	120,000	NA		NA		NA		51	(15.5)	153	(46.6)
	140,000 [4]	NA		NA		NA		16	(4.9)	20	(6.1)

NOTES:
1. Use only the vent pipe sizes shown for each furnace. It is NOT necessary to choose the smallest diameter pipe possible for venting.
2. NA – Not allowed. Pressure switch will not close, or flame disturbance may result.
3. Total equivalent vent lengths under 10' for 40,000 BTUH furnaces from 0 to 2000 ft. (0 to 610 M) above sea level require use of an outlet choke plate . **Failure to use an outlet choke when required may result in flame disturbance or flame sense lockout.**
4. Not all furnace families include 140,000 BTUH input models.
5. Vent sizing for Canadian installations over 4500 ft (1370 M) above sea level are subject to acceptance by local authorities having jurisdiction.
6. Size both the combustion air and vent pipe independently, then use the larger size for both pipes.
7. Assume the two 45° elbows equal one 90° elbow. Wide radius elbows are desirable and may be required in some cases.
8. Elbow and pipe sections within the furnace casing and at the vent termination should not be included in vent length or elbow count.
9. The minimum pipe length is 5 ft. (1.5 M) linear feet (meters) for all applications.
10. Use 3–in. (76 mm) diameter vent termination kit for installations requiring 4–in. (102 mm) diameter pipe.

MAXIMUM ALLOWABLE EXPOSED VENT LENGTHS INSULATION TABLE - FT. (M)

Maximum Length of Uninsulated and Insulated Vent Pipe-Ft (M)																	
Single Stage Furnace Input	Winter Design Temp ° F (° C)	Pipe Length in Ft. & M	No Insulation					3/8-in. (9.5 mm) Insulation					1/2-in. (12.7 mm) Insulation				
			Pipe Diameter-inches (mm)					Pipe Diameter-inches (mm)					Pipe Diameter-inches (mm)				
			1 1/2	2	2 1/2	3	4	1 1/2	2	2 1/2	3	4	1 1/2	2	2 1/2	3	4
			(38)	(51)	(64)	(76)	(102)	(38)	(51)	(64)	(76)	(102)	(38)	(51)	(64)	(76)	(102)
40000	20 (-10)	Ft.	48	42	42	N/A	N/A	50	122	111	N/A	N/A	50	144	130	N/A	N/A
		M	14.6	12.8	12.8	N/A	N/A	15.2	37.2	33.8	N/A	N/A	15.2	43.9	39.6	N/A	N/A
	0 (-20)	Ft.	25	19	17	N/A	N/A	50	75	66	N/A	N/A	50	90	79	N/A	N/A
		M	7.6	5.8	5.2	N/A	N/A	15.2	22.9	20.1	N/A	N/A	15.2	27.4	24.1	N/A	N/A
	-20 (-30)	Ft.	14	7	5	N/A	N/A	50	52	45	N/A	N/A	50	64	55	N/A	N/A
		M	4.3	2.1	1.5	N/A	N/A	15.2	15.8	13.7	N/A	N/A	15.2	19.5	16.8	N/A	N/A
	-40 (-40)	Ft.	7	0	0	N/A	N/A	50	38	31	N/A	N/A	50	48	40	N/A	N/A
		M	2.1	0.0	0.0	N/A	N/A	15.2	11.6	9.4	N/A	N/A	15.2	14.6	12.2	N/A	N/A
60000	20 (-10)	Ft.	30	61	61	54	N/A	30	135	163	142	N/A	30	135	191	166	N/A
		M	9.1	18.6	18.6	16.5	N/A	9.1	41.1	49.7	43.3	N/A	9.1	41.1	58.2	50.6	N/A
	0 (-20)	Ft.	30	31	30	23	N/A	30	113	100	85	N/A	30	135	120	101	N/A
		M	9.1	9.4	9.1	7.0	N/A	9.1	34.4	30.5	25.9	N/A	9.1	41.1	36.6	30.8	N/A
	-20 (-30)	Ft.	24	17	15	7	N/A	30	81	70	57	N/A	30	98	85	70	N/A
		M	7.3	5.2	4.6	2.1	N/A	9.1	24.7	21.3	17.4	N/A	9.1	29.9	25.9	21.3	N/A
	-40 (-40)	Ft.	15	8	5	0	N/A	30	61	52	40	N/A	30	75	64	51	N/A
		M	4.6	2.4	1.5	0.0	N/A	9.1	18.6	15.8	12.2	N/A	9.1	22.9	19.5	15.5	N/A
80000	20 (-10)	Ft.	20	70	78	70	60	20	70	175	183	154	20	70	175	215	181
		M	6.1	21.3	23.8	21.3	18.3	6.1	21.3	53.3	55.8	46.9	6.1	21.3	53.3	65.5	55.2
	0 (-20)	Ft.	20	42	41	33	21	20	70	132	111	89	20	70	157	133	107
		M	6.1	12.8	12.5	10.1	6.4	6.1	21.3	40.2	33.8	27.1	6.1	21.3	47.9	40.5	32.6
	-20 (-30)	Ft.	20	25	23	14	1	20	70	94	77	57	20	70	113	94	71
		M	6.1	7.6	7.0	4.3	0.3	6.1	21.3	28.7	23.5	17.4	6.1	21.3	34.4	28.7	21.6
	-40 (-40)	Ft.	20	14	12	3	0	20	70	71	56	38	20	70	86	70	50
		M	6.1	4.3	3.7	0.9	0.0	6.1	21.3	21.6	17.1	11.6	6.1	21.3	26.2	21.3	15.2
100000	20 (-10)	Ft.	N/A	25	99	89	78	N/A	25	110	233	265	N/A	25	110	235	229
		M	N/A	7.6	30.2	27.1	23.8	N/A	7.6	33.5	71.0	80.8	N/A	7.6	33.5	71.6	69.8
	0 (-20)	Ft.	N/A	25	55	46	33	N/A	25	110	145	117	N/A	25	110	173	140
		M	N/A	7.6	16.8	14.0	10.1	N/A	7.6	33.5	44.2	35.7	N/A	7.6	33.5	52.7	42.7
	-20 (-30)	Ft.	N/A	25	34	24	11	N/A	25	110	103	79	N/A	25	110	124	97
		M	N/A	7.6	10.4	7.3	3.4	N/A	7.6	33.5	31.4	24.1	N/A	7.6	33.5	37.8	29.6
	-40 (-40)	Ft.	N/A	23	20	11	0	N/A	25	95	77	55	N/A	25	110	94	70
		M	N/A	7.0	6.1	3.4	0.0	N/A	7.6	29.0	23.5	16.8	N/A	7.6	33.5	28.7	21.3
120000	20 (-10)	Ft.	N/A	N/A	15	99	86	N/A	N/A	15	100	219	N/A	N/A	15	100	250
		M	N/A	N/A	4.6	30.2	26.2	N/A	N/A	4.6	30.5	66.8	N/A	N/A	4.6	30.5	76.2
	0 (-20)	Ft.	N/A	N/A	15	51	38	N/A	N/A	15	100	130	N/A	N/A	15	100	156
		M	N/A	N/A	4.6	15.5	11.6	N/A	N/A	4.6	30.5	39.6	N/A	N/A	4.6	30.5	47.5
	-20 (-30)	Ft.	N/A	N/A	15	28	14	N/A	N/A	15	100	88	N/A	N/A	15	100	108
		M	N/A	N/A	4.6	8.5	4.3	N/A	N/A	4.6	30.5	26.8	N/A	N/A	4.6	30.5	32.9
	-40 (-40)	Ft.	N/A	N/A	15	14	0	N/A	N/A	15	85	62	N/A	N/A	15	100	79
		M	N/A	N/A	4.6	4.3	0.0	N/A	N/A	4.6	25.9	18.9	N/A	N/A	4.6	30.5	24.1
140000	20 (-10)	Ft.	N/A	N/A	10	90	99	N/A	N/A	10	90	210	N/A	N/A	10	90	210
		M	N/A	N/A	3.0	27.4	30.2	N/A	N/A	3.0	27.4	64.0	N/A	N/A	3.0	27.4	64.0
	0 (-20)	Ft.	N/A	N/A	10	61	47	N/A	N/A	10	90	153	N/A	N/A	10	90	183
		M	N/A	N/A	3.0	18.6	14.3	N/A	N/A	3.0	27.4	46.6	N/A	N/A	3.0	27.4	55.8
	-20 (-30)	Ft.	N/A	N/A	10	35	21	N/A	N/A	10	90	104	N/A	N/A	10	90	128
		M	N/A	N/A	3.0	10.7	6.4	N/A	N/A	3.0	27.4	31.7	N/A	N/A	3.0	27.4	39.0
	-40 (-40)	Ft.	N/A	N/A	10	20	NA	N/A	N/A	10	90	75	N/A	N/A	10	90	94
		M	N/A	N/A	3.0	6.1	NA	N/A	N/A	3.0	27.4	22.9	N/A	N/A	3.0	27.4	28.7

*Not all families have these models.

RETURN AIR TEMPERATURE

This furnace is designed for continuous return-air minimum temperature of 60°F (15°C) db or intermittent operation down to 55°F (13°C) db such as when used with a night setback thermometer. Return-air temperature must not exceed 80°F (27°C) db. Failure to follow these return air limits may affect reliability of heat exchangers, motors and controls.

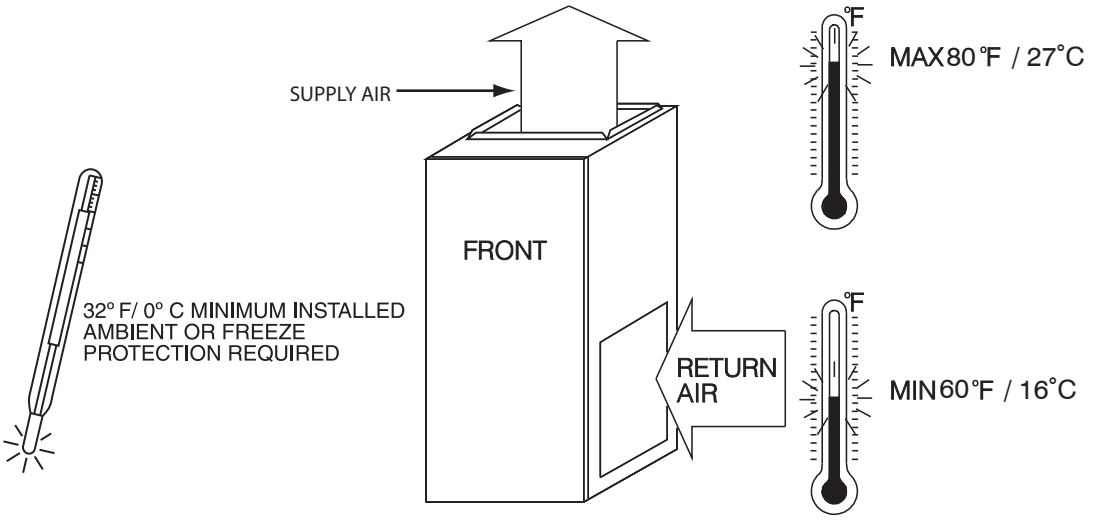

A10490

MINIMUM CLEARANCES TO COMBUSTIBLE MATERIALS

POSITION	CLEARANCE
Rear	0 (0 mm)
Front (Combustion air openings in furnace and in structure)	1 in. (25 mm)
Required for service**	24 in. (610 mm)*
All Sides of Supply Plenum**	1 in. (25 mm)
Sides	0 (0 mm)
Vent	0 (0 mm)
Top of Furnace	1 in. (25 mm)

* Recommended
**Consult your local building codes

COMBUSTION-AIR PIPE FOR NON-DIRECT (1-PIPE) VENT APPLICATION

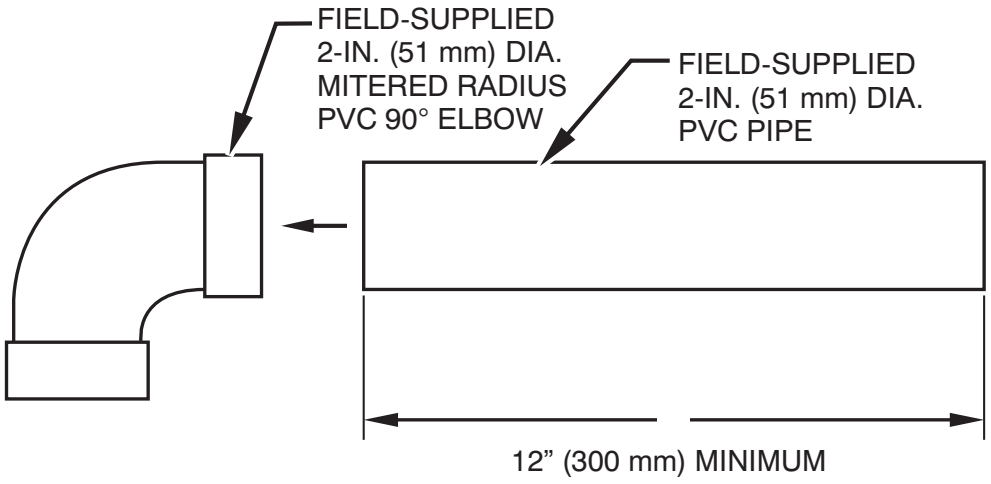

A12376

NOTE: See Installation Instructions for specific venting configurations.

915SA

DOWNFLOW SUBBASE

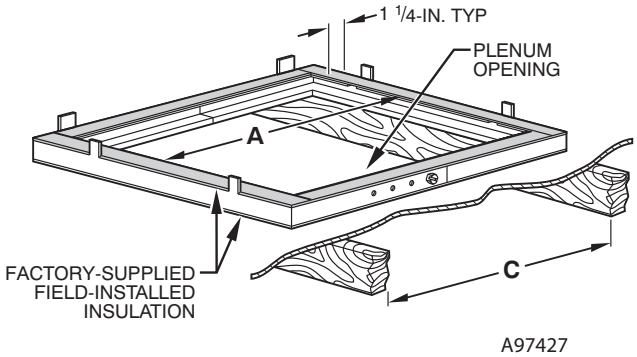

Assembled

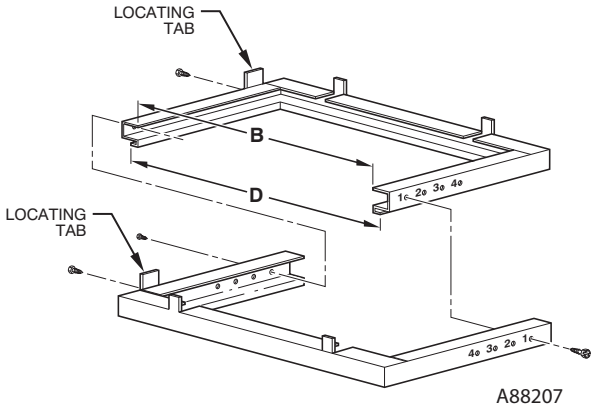

Disassembled

DIMENSIONS (IN. / MM)						
FURNACE CASING WIDTH	FURNACE IN DOWNFLOW APPLICATION	PLENUM OPENING*		FLOOR OPENING		HOLE NO. FOR WIDTH ADJUSTMENT
		A	B	C	D	
14–3/16 (360)	Furnace with or without Cased Coil Assembly or Coil Box	11–3/16 (322)	19 (483)	13–7/16 (341)	20–5/8 (600)	4
17–1/2 (445)	Furnace with or without Cased Coil Assembly or Coil Box	15–1/8 (384)	19 (483)	16–3/4 (426)	20–5/8 (600)	3
21 (533)	Furnace with or without Cased Coil Assembly or Coil Box	18–5/8 (396)	19 (483)	20–1/4 (514)	20–5/8 (600)	2
24–1/2 (622)	Furnace with or without Cased Coil Assembly or Coil Box	22–1/8 (562)	19 (483)	23–3/4 (603)	20–5/8 (600)	1

*The plenum should be constructed 1/4–in. (6 mm) smaller in width and depth than the plenum dimensions shown above.

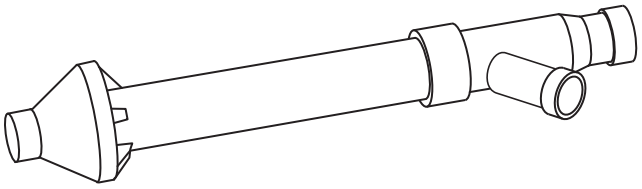

Concentric Vent Kit

A93086

A concentric vent kit allows vent and combustion-air pipes to terminate through a single exit in a roof or side wall. One pipe runs inside the other allowing venting through the inner pipe and combustion air to be drawn in through the outer pipe.

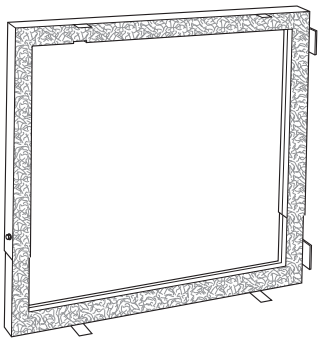

Downflow Subbase

A88202

One base fits all furnace sizes. The base is designed to be installed between the furnace and a combustible floor when no coil box is used or when a coil box other than a Carrier cased coil is used. It is CSA design certified for use with Carrier branded furnaces when installed in downflow applications.

MEDIA FILTER CABINET

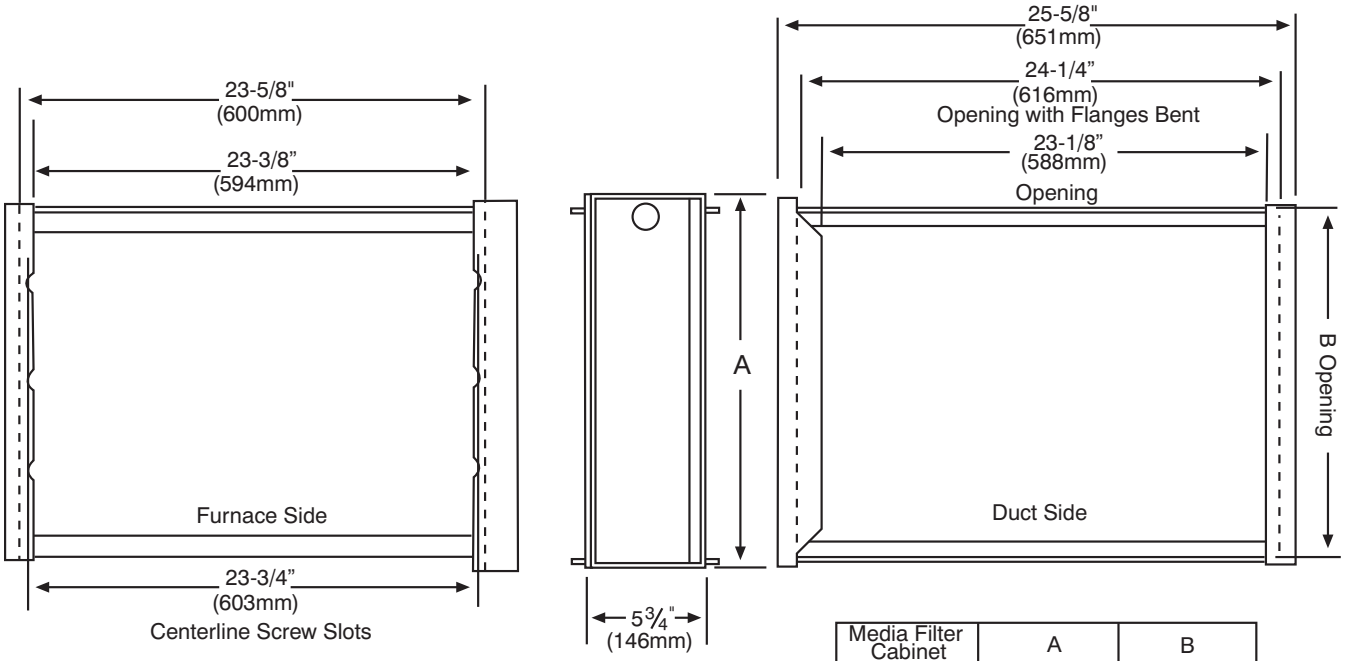

Media Filter Cabinet	A	B
16" (406mm)	17" (432mm)	16" (406mm)
20" (508mm)	21" (533mm)	20" (508mm)
24" (610mm)	25" (635mm)	24" (610mm)

NOTE: Media cabinet is matched to the bottom opening on furnace. May also be used for side return.

A12428

915SA

TYPICAL WIRING SCHEMATIC

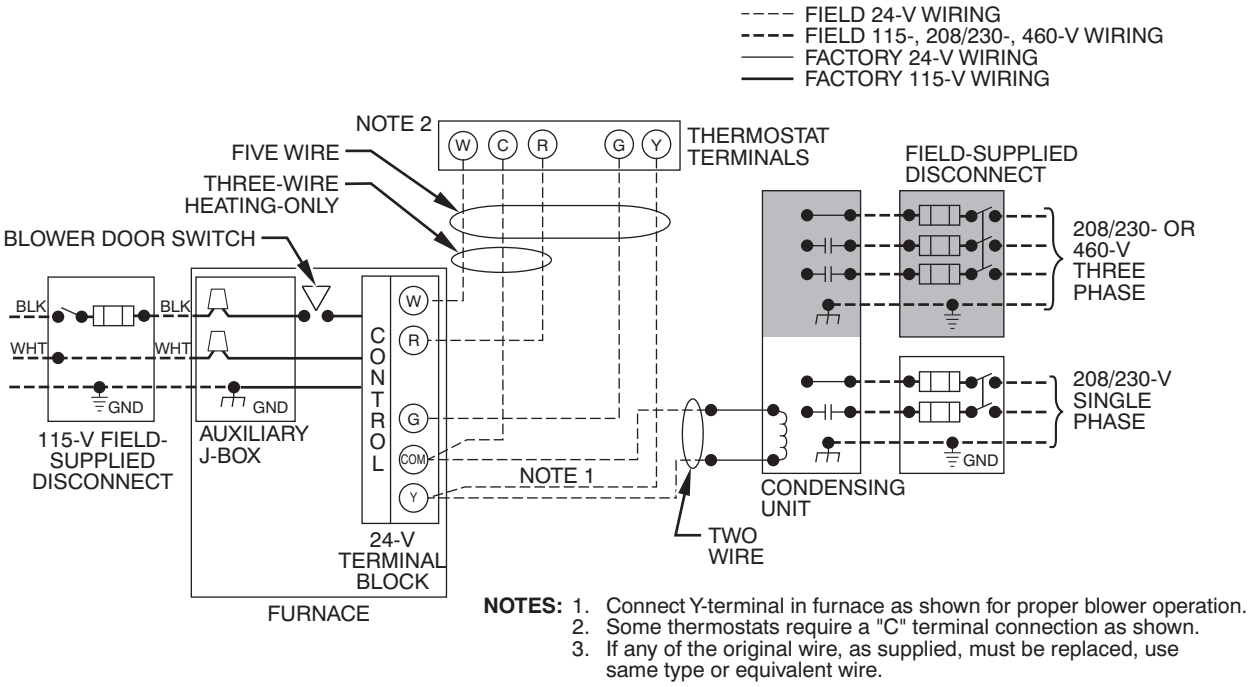

NOTES: 1. Connect Y-terminal in furnace as shown for proper blower operation.
2. Some thermostats require a "C" terminal connection as shown.
3. If any of the original wire, as supplied, must be replaced, use same type or equivalent wire.

A11387

DIMENSIONAL DRAWING

NOTES:
1. Doors may vary by model.
2. Minimum return-air openings at furnace, based on metal duct. If flex duct is used, see flex duct manufacturer's recommendations for equivalent diameters.
   a. For 800 CFM-16-in. (406 mm) round or 14 1/2 x 12-in. (368 x 305 mm) rectangle.
   b. For 1200 CFM-20-in. (508 mm) round or 14 1/2 x 19 1/2-in. (368 x 495 mm) rectangle.
   c. For 1600 CFM-22-in. (559 mm) round or 14 1/2 x 22 1/16-in. (368 x 560mm) rectangle.
   d. Return air above 1800 CFM at 0.5 in. w.c. ESP on 24.5" casing, requires one of the following configurations: 2 sides, 1 side and a bottom or bottom only. See Air Delivery table in this document for specific use to allow for sufficient airflow to the furnace.
3. Vent and Combustion air pipes through blower compartment must use accessory "Vent Kit - Through the Cabinet". See accessory list for current part number.

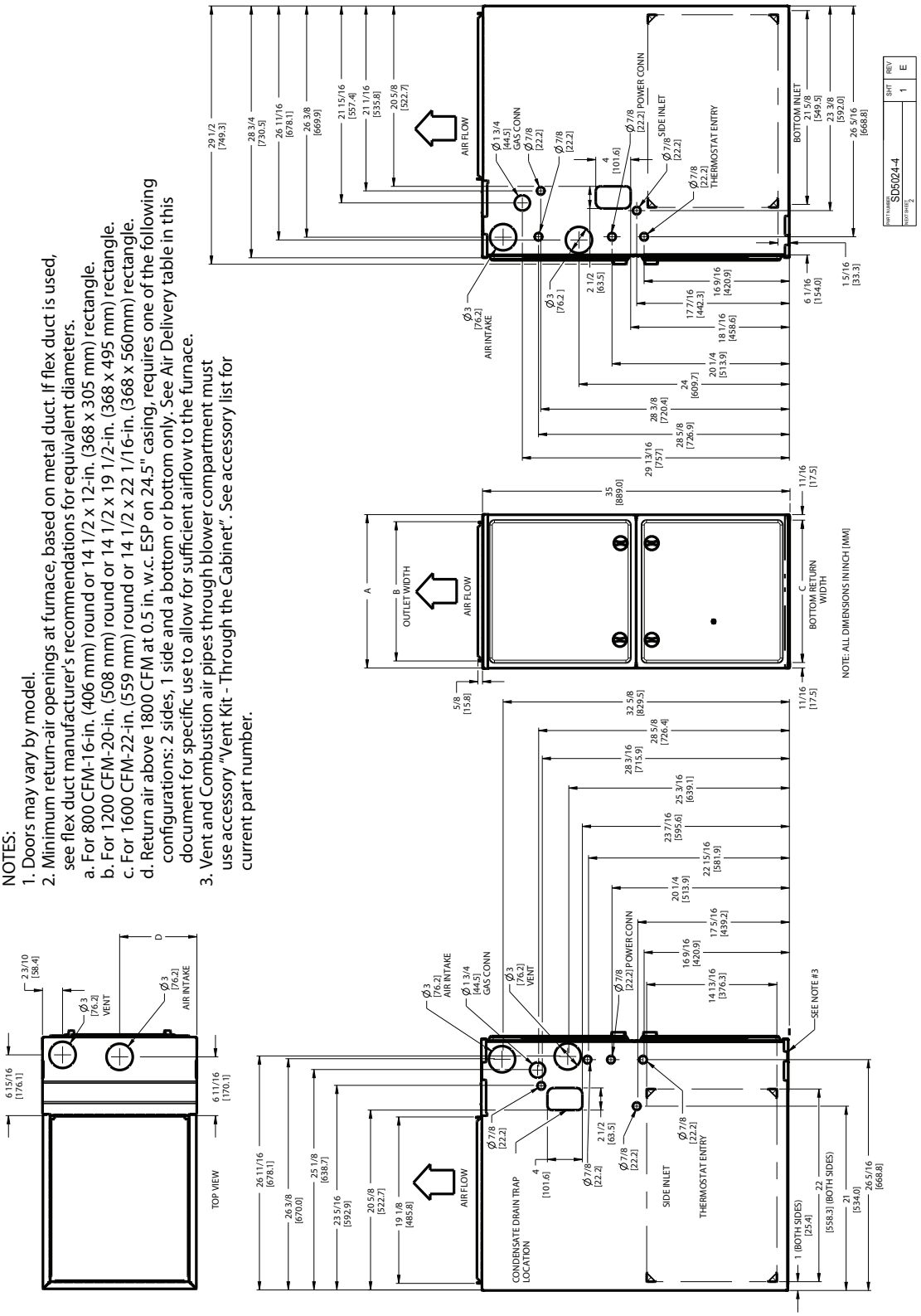

A12267

915SA FURNACE SIZE	A CABINET WIDTH	B OUTLET WIDTH	C BOTTOM INLET WIDTH	D AIR INTAKE	SHIP WT. LB (KG)
30040	14-3/16 (361)	12-1/2 (319)	12-9/16 (322)	7-1/8 (181)	123.0 (55.9)
30060					127.0 (57.7)
36040	17-1/2 (445)	15-7/8 (403)	16 (406)	8-3/4 (222)	134.0 (60.9)
42060					144.0 (65.4)
48080					154.0 (70.0)
60080	21 (533)	19-3/8 (492)	19-1/2 (495)	10-1/2 (267)	161.5 (73.4)
42100					168.5 (76.6)
60100					168.5 (76.6)
60120	24-1/2 (622)	22-7/8 (581)	23 (584)	12-1/4 (311)	186.0 (84.5)
60140					190.0 (86.4)

GUIDE SPECIFICATIONS

General

System Description

Furnish a _____ 4-way multipoise gas-fired condensing furnace for use with natural gas or propane (factory-authorized conversion kit required for propane).

Quality Assurance

Unit will be designed, tested and constructed to the current ANSI Z 21.47/CSA 2.3 design standard for gas-fired central furnaces.

Unit will be third party certified by CSA to the current ANSI Z 21.47/CSA 2.3 design standard for gas-fired central furnaces. Unit will carry the CSA Blue Star® and Blue Flame® labels. Unit efficiency testing will be performed per the current DOE test procedure as listed in the Federal Register.

Unit will be certified for capacity and efficiency and listed in the latest AHRI Consumer's Directory of Certified Efficiency Ratings.

Unit will carry the current Federal Trade Commission Energy Guide efficiency label.

Delivery, Storage, and Handling

Unit will be shipped as single package only and is stored and handled per unit manufacturer's recommendations.

Warranty (for inclusion by specifying engineer)

U.S. and Canada only. Warranty certificate available upon request.

Equipment

Blower Wheel and PSC Blower Motor

Galvanized blower wheel shall be centrifugal type, statically and dynamically balanced. Blower motor of PSC type shall be permanently lubricated with sleeve bearings, of _____hp, and have multiple speeds from 500-1150 RPM operating only when 115-VAC motor inputs are provided. Blower motor shall be direct drive and soft mounted to the blower housing to reduce vibration transmission.

Filters

Furnace shall have reusable-type filters. Filter shall be _____ in. (mm) X _____ in. (mm). An accessory highly efficient Media Filter is available as an option. _____ Media Filter.

Casing

Casing shall be of .030 in. thickness minimum, pre-painted galvanized steel.

Draft Inducer Motor

Draft inducer motor shall be single-speed PSC design.

Primary Heat Exchangers

Primary heat exchangers shall be 3-Pass corrosion-resistant aluminized steel of fold-and-crimp sectional design and applied operating under negative pressure.

Secondary Heat Exchangers

Secondary heat exchangers shall be of a stainless steel flow-through of fin-and-tube design and applied operating under negative pressure.

Controls

Controls shall include a micro-processor-based integrated electronic control board with at least 16 service troubleshooting codes displayed via diagnostic flashing LED light on the control, a self-test feature that checks all major functions of the furnace, and a replaceable automotive-type circuit protection fuse. Multiple operational settings available, including blower speeds for heating and cooling. Continuous fan speed is the same as the selected heating speed.

Operating Characteristics

Heating capacity shall be _____ Btuh input; _____ Btuh output capacity.

Fuel Gas Efficiency shall be _____AFUE.

Air delivery shall be _____ cfm minimum at 0.50 in. W.C. external static pressure.

Dimensions shall be: depth_____in. (mm); width _____in. (mm); height_____in. (mm) (casing only). Height shall be_____in. (mm) with A/C coil and _____in. (mm) overall with plenum.

Electrical Requirements

Electrical supply shall be 115 volts, 60 Hz, single-phase (nominal). Minimum wire size shall be _____AWG; maximum fuse size of HACR-type designated circuit breaker shall be _____ amps.

Special Features

Refer to section of the product data identifying accessories and descriptions for specific features and available enhancements.

©2012 Bryant Heating & Cooling Systems ● 7310 W. Morris St. ● Indianapolis, IN 46231 Edition Date: 10/12 **Catalog No. PDS915SA−03**

Manufacturer reserves the right to discontinue, or change at any time, specifications or designs without notice and without incurring obligations. Replaces: PDS915SA−02