915SA
LEGACY LINE SINGLE-STAGE
4-WAY MULTIPOISE
CONDENSING GAS FURNACE, SERIES A AND B

bryant®

Product Data

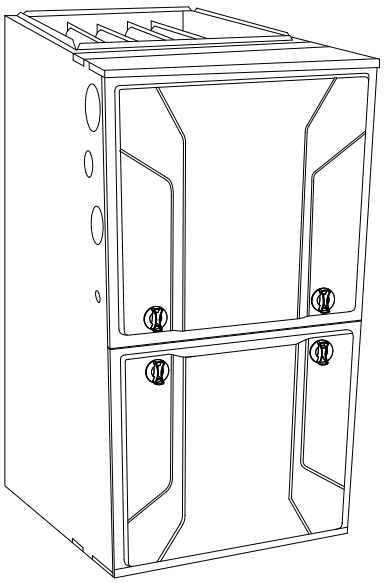

A11264

The 915S Multipoise Condensing Gas Furnace is part of the Legacy Line product offering. Sporting a PSC blower motor and an Annual Fuel Utilization Efficiency (AFUE) of 95.5%, this single-stage gas furnace provides efficient comfort for homeowners. This Legacy Line Gas Furnace also features 4-way multipoise installation flexibility, and is available in eleven model sizes. All sizes except the 26,000 BTUH model can be vented for direct vent/two-pipe, ventilated combustion air, or single-pipe applications. The 26,000 BTUH model can use the same 2-pipe venting system using outside air for combustion, but is not considered direct-vent. A Bryant® Air Conditioner or Heat Pump can be used to form a complete system. All units meet California Air Quality Management District emission requirements. These furnaces are approved for Manufactured Housing (Mobile Home) applications. All sizes are design certified in Canada.

STANDARD FEATURES

- 4-way multipoise design for upflow, downflow or horizontal installation.
- Optional through-the-cabinet downflow venting.
- Installation flexibility with a 360-degree rotating elbow.
- Ideal condensing furnace height 35” cabinet: short enough for taller coils, but still allows enough room for service.
- Silicon Nitride Perfect Light™ Hot Surface Igniter.
- Aluminized-steel primary heat exchanger.
- Stainless-steel condensing secondary heat exchanger.
- High-quality corrosion-resistant prepainted steel cabinet with hemmed edges for safety.
- Factory-configured ready for upflow applications.
- Direct-vent/sealed combustion, single-pipe venting or ventilated combustion air.
- PSC blower motor, single-speed inducer motor, and single-stage gas valve.
- Self-diagnostics
- Approved for Twinning applications (30060 through 60120 sizes, only).
- Propane convertible (See accessory list).
- Approved for Manufactured Housing/Mobile Home applications (except 26,000 and 140,000 Btuh input) with MH accessory kit.
- Convenient Air Purifier and Humidifier electrical connections.
- Residential installations may be eligible for consumer financing through the Retail Credit Program.
- Certified to leak 2% or less of nominal air conditioning CFM delivered when pressurized to 1-inch water column with all present air inlets, air outlets, and condensate drain port(s) are sealed.

LEGACY LINE

Certified System ISO 9001 QMI-SAI Global

AHRI CERTIFIED™ www.ahridirectory.org

Use of the AHRI Certified ™ Mark indicates a manufacturer’s participation in the program. For verification of certification for individual products, go to www.ahridirectory.org.

DESIGN CERTIFIED®

CERTIFIED®

SAP ORDERING NO.	CASING DIMENSIONS (IN.)			RATED HEATING OUTPUT†	AFUE		ENERGY STAR®	HEATING AIRFLOW		COOLING CFM @ 0.5 ESP (in. W.C.)	MOTOR HP SPEED TAPS
	H	D	W	(BTUH)	UPFLOW/ HORIZONTAL	DOWNFLOW		CFM‡	HEATING ESP (in. W.C.)		
915SA24026S14	35	29.5	14.2	25,000	95.5%	95.0%	None	675	0.10	440-775	1/4 - 4
915SA30040S14	35	29.5	14.2	39,000	95.5%	95.0%	None	820	0.10	625-905	1/2 - 4
915SA36040S17	35	29.5	17.5	39,000	95.5%	95.0%	None	1000	0.10	650-1050	1/2 - 5
915SA30060S14	35	29.5	14.2	58,000	95.5%	95.0%	None	840	0.12	675-1130	1/2 - 4
915SA42060S17	35	29.5	17.5	58,000	95.5%	95.0%	None	980	0.12	650-1420	1/2 - 5
915SA48080S17	35	29.5	17.5	78,000	95.5%	95.0%	None	1040	0.15	810-1600	3/4 - 5
915SA60080S21	35	29.5	21.0	78,000	95.5%	95.0%	None	1695	0.15	1335-1970	1 - 5
915SA42100S21	35	29.5	21.0	97,000	95.5%	95.0%	None	1510	0.20	915–1545	1/2 - 4
915SA60100S21	35	29.5	21.0	97,000	95.5%	95.0%	None	1680	0.20	1345–2065	1 - 5
915SA60120S24	35	29.5	24.5	117,000	95.5%	95.0%	None	2245	0.20	1320-2105	1 - 5
915SA60140S24	35	29.5	24.5	135,000	95.5%	94.4%	None	2175	0.20	1290–2035	1 - 5

† Capacity in accordance with DOE test procedures. Ratings are position dependent. See rating plate.
‡ Heating CFM at factory default blower motor heating tap settings.
ESP – External Static Pressure

FEATURES AND BENEFITS

HYBRID HEAT® Dual Fuel system — This system can provide more control over your monthly energy bills by automatically selecting the most economical method of heating. With HYBRID HEAT, our system automatically switches between the gas furnace and the single-stage electric heat pump as outside temperatures change to maintain greater efficiency and comfort than with any traditional single-source heating system. The heat pump also delivers high-efficiency cooling in the summer.

Power Heat™ Igniter — Bryant's unique SiN igniter is not only physically robust but it is also electrically robust. It is capable of running at line voltage and does not require complex voltage regulators as do other brands. This unique feature further enhances the gas furnace reliability and continues Bryant's tradition of technology leadership and innovation in providing a reliable and durable product.

Reliable Heat Exchanger Design — The aluminized steel, clam shell primary heat exchanger was re-engineered to achieve greater efficiency out of a smaller size. The first two passes of the heat exchanger are based on the current 80% product, a design with more than ten years of field-proven performance and success. These innovations, paired with the continuation of a crimped, no-weld seam create an efficient, robust design for this essential component.

The condensing heat exchanger, a stainless steel fin and tube design, is positioned in the furnace to extract additional heat. Stainless steel coupling box componentry between heat exchangers has exceptional corrosion resistance in both natural gas and propane applications.

4-Way Multipoise Design — One model for all applications – there is no need to stock special downflow or horizontal models when one unit will do it all. The new heat exchanger design allows these units to achieve the certified AFUE in all positions.

Direct or Single-pipe Venting, or Optional Ventilated Combustion Air — All sizes except the 26,000 BTUH model can be vented for direct vent/two-pipe, ventilated combustion air, or single-pipe applications. The 26,000 BTUH model can use the same 2-pipe venting system using outside air for combustion, but is not considered direct-vent. This provides added flexibility to meet diverse installation needs.

Sealed Combustion System — This furnace brings in combustion air from outside the furnace, which results in especially quiet operation. By sealing the entire combustion vestibule, the entire furnace can be made quieter, not just the sound of the burners.

Monoport Burners — The burners are specially designed and finely tuned for smooth, quiet combustion and economical operation.

Bottom Closure — Factory-installed for side return; easily removable for bottom return. The multi-use bottom closure can also serve for roll-out protection in horizontal applications, and act as the bottom closure for the optional return air base accessory.

Blower Access Panel Switch — Automatically shuts off 115-v power to furnace whenever blower access panel is opened.

Quality Registration — Our furnaces are engineered and manufactured under an ISO 9001 registered quality system.

Certifications — This furnace is CSA (AGA and CGA) design certified for use with natural and propane gases. The furnace is factory-shipped for use with natural gas. A CSA listed gas conversion kit is required to convert furnace for use with propane gas. The efficiency is AHRI efficiency rating certified. This furnace meets California Air Quality Management District emission requirements.

SPECIFICATIONS

The furnace should be sized to provide 100 percent of the design heating load requirement plus any margin that occurs because of furnace model size capacity increments. None of the furnace model sizes can be used if the heating load is 12,000 BTUH or lower. Use Air Conditioning Contractors of America (Manual J and S); American Society of Heating, Refrigerating, and Air-Conditioning Engineers; or other approved engineering method to calculate heating load estimates and select the furnace. Excessive oversizing of the furnace may cause the furnace and/or vent to fail prematurely, customer discomfort and/or vent freezing.

Failure to follow these guidelines is considered faulty installation and/or misapplication of the furnace; and resulting failure, damage, or repairs may impact warranty coverage.

Heating Capacity and Efficiency			**24026**	**30040**	**36040**	**30060**	**42060**	**48080**	**60080**	**42100**	**60100**	**60120**	**60140**
Input	High Heat	(BTUH)	26,000	40,000	40,000	60,000	60,000	80,000	80,000	100,000	100,000	120,000	140,000
Output	High Heat	(BTUH)	25,000	39,000	39,000	58,000	58,000	78,000	78,000	97,000	97,000	117,000	135,000
Certified Temperature Rise Range ºF (ºC)		High Heat	25 - 55 (14 - 31)	40 - 70 (22 - 39)	35 - 65 (19 - 36)	40 - 70 (22 - 39)	40 - 70 (22 - 39)	40 - 70 (22 - 39)	40 - 70 (22 - 39)	40 - 70 (22 - 39)	40 - 70 (22 - 39)	40 - 70 (22 - 39)	45 - 75 (25 - 42)
Airflow Capacity and Blower Data			**24026**	**30040**	**36040**	**30060**	**42060**	**48080**	**60080**	**42100**	**60100**	**60120**	**60140**
Rated External Static Pressure (in. W.C.)		Heating	0.10	0.10	0.10	0.12	0.12	0.15	0.15	0.20	0.20	0.20	0.20
		Cooling	0.5	0.5	0.5	0.5	0.5	0.5	0.5	0.5	0.5	0.5	0.5
Airflow Delivery @ Rated ESP (CFM)		High Heat	675	820	1000	840	980	1040	1695	1510	1680	2245	2175
		Cooling	775	905	1050	1130	1420	1600	1970	1545	2065	2105	2035
Cooling Capacity (tons)		400 CFM/ton	1.5	2	2.5	2.5	3.5	4	5	4	5	5	5
		350 CFM/ton	2	2.5	3	3	4	4.5	5.5	4.5	6	6	6
Direct-Drive Motor Type			Permanent Split Capacitor (PSC)										
Direct-Drive Motor HP			0.25	0.5	0.5	0.5	0.5	0.75	1	0.5	1	1	1
Motor Full Load Amps			2.8	6.2	6.8	6.2	6.8	7.9	13.8	6.5	13.8	14.1	14.1
RPM Range			500 -1150										
Speed Selections			4	4	5	4	5	5	5	4	5	5	5
Blower Wheel Dia x Width		in.	11 x 7	11 x 7	11 x 8	11 x 7	11 x 8	11 x 8	11 x 10	11 x 10	11 x 10	11 x 11	11 x 11
Air Filtration System			Field Supplied										
Filter Used for Certified Watt Data*			KGAWF**06UFR										
Electrical Data			**24026**	**30040**	**36040**	**30060**	**42060**	**48080**	**60080**	**42100**	**60100**	**60120**	**60140**
Input Voltage		Volts-Hertz-Phase	115-60-1										
Operating Voltage Range		Min-Max	104-127										
Maximum Input Amps		Amps	3.6	6.8	8.3	7.0	8.4	9.6	14.5	7.6	14.6	14.9	14.9
Unit Ampacity		Amps	5.4	9.5	11.4	9.7	11.5	13.0	19.1	10.4	19.2	19.6	19.6
Minimum Wire Size		AWG	14	14	14	14	14	14	12	14	12	12	12
Maximum Wire Length @ Minimum Wire Size		Feet	68	39	32	38	32	28	30	35	29	29	29
		(M)	(20.7)	(11.9)	(9.8)	(11.6)	(9.8)	(8.5)	(9.1)	(10.7)	(8.8)	(8.8)	(8.8)
Maximum Fuse/Ckt Bkr (Time-Delay Type Recom-mended)		Amps	15	15	15	15	15	15	20	15	20	20	20
Transformer Capacity (24vac output)			40 VA										
External Control Power Available		Heating	27.9 VA										
		Cooling	34.6 VA										
Controls			**24026**	**30040**	**36040**	**30060**	**42060**	**48080**	**60080**	**42100**	**60100**	**60120**	**60140**
Gas Connection Size			1/2" - NPT										
Burners (Monoport)			2	2	2	3	3	4	4	5	5	6	7
Gas Valve (Redundant)		Manufacturer	White Rogers										
Minimum Inlet Gas pressure (in. W.C.)			4.5										
Maximum Inlet Gas pressure (in. W.C.)			13.6										
Ignition Device			Silicon Nitride										
Limit Control			220	165	180	165	180	170	200	180	180	160	155
Heating Blower Control (Heating Off-Delay)			Adjustable: 90, 120, 150, 180 seconds										
Cooling Blower Control (Time Delay Relay)			90 seconds										
Communication System			*none*										
Thermostat Connections			Com 24V, R, W, G, Y										
Accessory Connections			EAC (115vac); HUM (24vac)										

* See Accessory List for part numbers available.

MODEL NUMBER NOMENCLATURE

Example of a Model Number

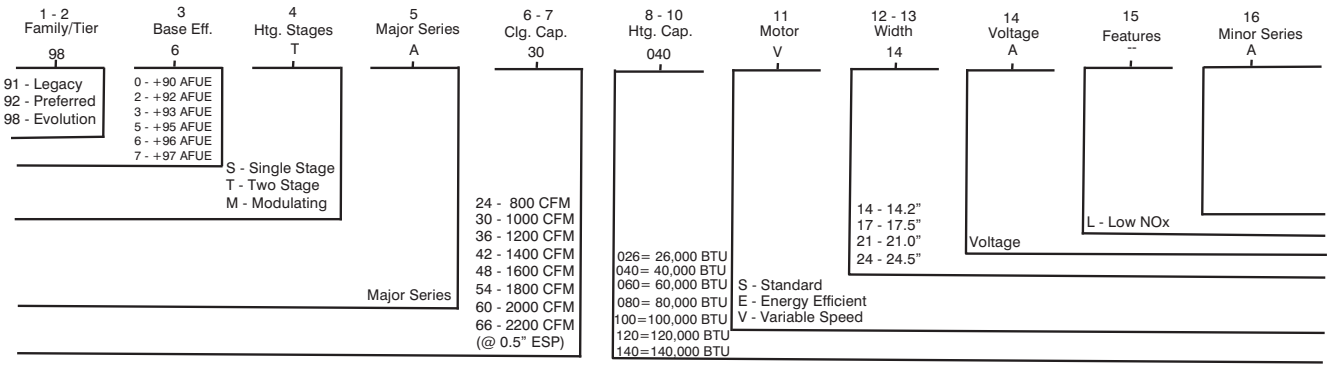

Not all familes have these models.

A150611

915SA

FURNACE COMPONENTS

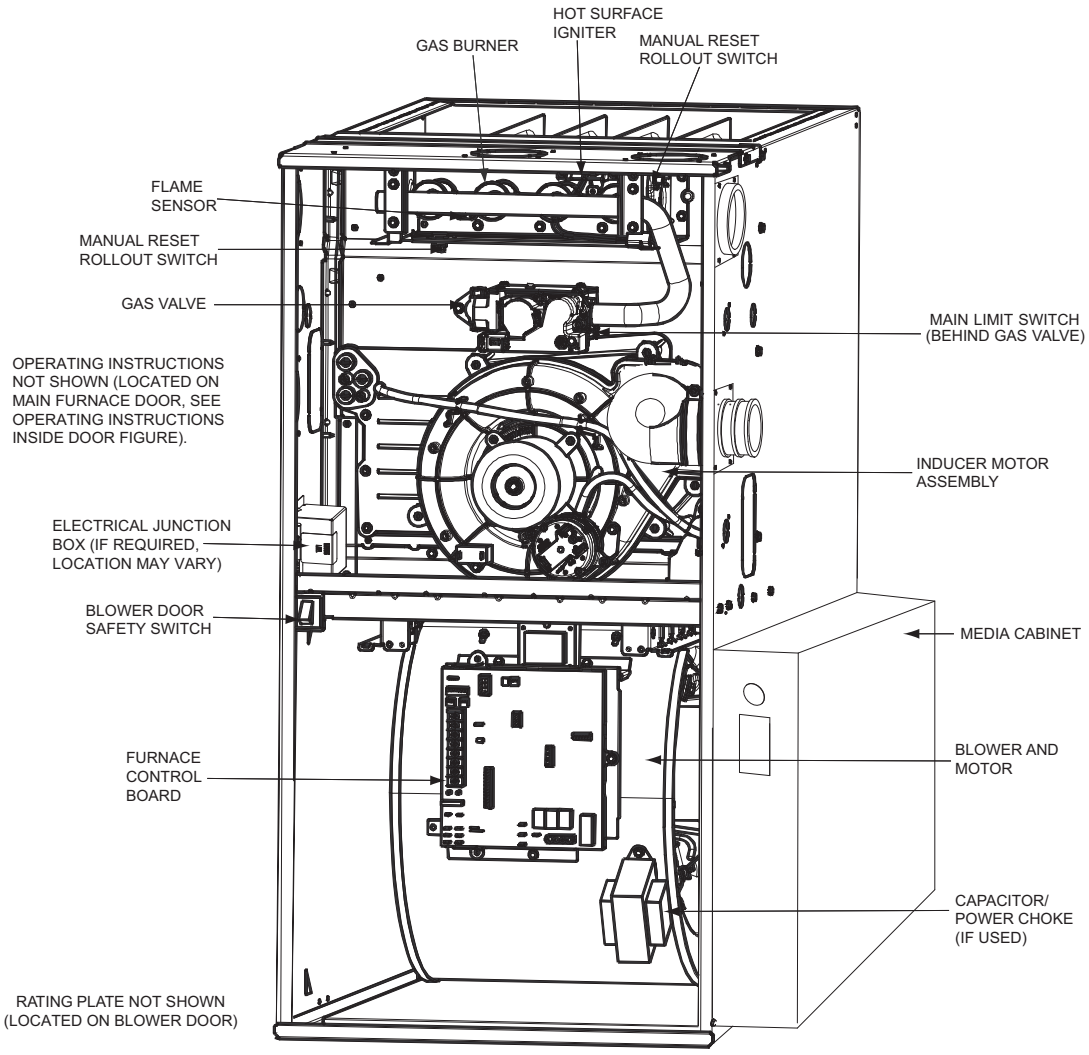

REPRESENTATIVE DRAWING ONLY, SOME MODELS MAY VARY IN APPEARANCE.

A11408

ACCESSORIES

DESCRIPTION	PART NUMBER	24026	30040	30060	36040	42060	48080	60080	42100	60100	60120	60140
Venting Accessories												
Vent Kit - Through the Cabinet	KGADC0101BVC	●	●	●	●	●	●	●	●	●	●	●
Vent Terminal - Concentric - 2” (51 mm)	KGAVT0701CVT	See Venting Tables										
Vent Terminal - Concentric - 3” (76 mm)	KGAVT0801CVT											
Vent Terminal Bracket - 2” (51 mm)	KGAVT0101BRA											
Vent Terminal Bracket - 3” (76 mm)	KGAVT0201BRA											
Vent Kit – Rubber Coupling	KGAAC0101RVC	See Venting Tables										
Condensate Drainage Accessories												
Freeze Protect Kit – Trap Heater	KGAHT0201CFP	●	●	●	●	●	●	●	●	●	●	●
CPVC to PVC Drain Adapters - 1/2” CPVC to 3/4” PVC	KGAAD0110PVC	●	●	●	●	●	●	●	●	●	●	●
Horizontal Trap Grommet - Direct Vent	KGACK0101HCK	All 2–Pipe Horizontal										
Condensate Neutralizer Kit	P908–0001	●	●	●	●	●	●	●	●	●	●	●
External Trap Kit	KGAET0201ETK	●	●	●	●	●	●	●	●	●	●	●
Ductwork Adapter Accessories												
Furnace Base Kit for Combustible Floors	KGASB0201ALL	●	●	●	●	●	●	●	●	●	●	●
Coil Adapter Kits – No Offset	KGADA0101ALL	●	●	●	●	●	●	●	●	●	●	●
Coil Adapter Kits – Single Offset	KGADA0201ALL	●	●	●	●	●	●	●	●	●	●	●
Coil Adapter Kits – Double Offset	KGADA0301ALL	●	●	●	●	●	●	●	●	●	●	●
Return Air Base (Upflow Applications) 14.0–in. wide	KGARP0301B14	●	●	●								
Return Air Base (Upflow Applications) 17.5–in. wide	KGARP0301B17				●	●	●					
Return Air Base (Upflow Applications) 21.0–in. wide	KGARP0301B21							●	●	●		
Return Air Base (Upflow Applications) 24.5–in. wide	KGARP0301B24										●	●
IAQ Device Duct Adapters 20.0–in. IAQ to 16 in. Side Return	KGAAD0101MEC	20”x25” IAQ Devices										
IAQ Device Duct Adapters 24.0–in. IAQ to 16 in. Side Return	KGAAD0201MEC	24”x25” IAQ Devices										
Gas Conversion Accessories												
Mobile Home Kit	KGBMH0601KIT		●	●	●	●	●	●	●	●	●	
Gas Conversion Kit - Nat to LP	KGBNP54011SP	●										
Gas Conversion Kit - LP to Nat	KGBPN46011SP	●										
Gas Conversion Kit - Nat to LP	KGBNP50011SP		●	●	●	●	●	●	●	●	●	●
Gas Conversion Kit - LP to Nat	KGBPN42011SP		●	●	●	●	●	●	●	●	●	●
Gas Orifice Kit - #42 (Nat Gas)	LH32DB207	●	●	●	●	●	●	●	●	●	●	●
Gas Orifice Kit - #43 (Nat Gas)	LH32DB202	●	●	●	●	●	●	●	●	●	●	●
Gas Orifice Kit - #44 (Nat Gas)	LH32DB200	●	●	●	●	●	●	●	●	●	●	●
Gas Orifice Kit - #45 (Nat Gas)	LH32DB205		●	●	●	●	●	●	●	●	●	●
Gas Orifice Kit - #46 (Nat Gas)	LH32DB208		●	●	●	●	●	●	●	●	●	●
Gas Orifice Kit - #47 (Nat Gas)	LH32DB078		●	●	●	●	●	●	●	●	●	●
Gas Orifice Kit - #48 (Nat Gas)	LH32DB076		●	●	●	●	●	●	●	●	●	●
Gas Orifice Kit - #54 (LP)	LH32DB203		●	●	●	●	●	●	●	●	●	●
Gas Orifice Kit - #55 (LP)	LH32DB201		●	●	●	●	●	●	●	●	●	●
Gas Orifice Kit - #56 (LP)	LH32DB206		●	●	●	●	●	●	●	●	●	●
Gas Orifice Kit - 1.25mm (LP)	LH32DB209	●	●	●	●	●	●	●	●	●	●	●
Gas Orifice Kit - 1.30mm (LP)	LH32DB210		●	●	●	●	●	●	●	●	●	●
Control Accessories												
Twinning Kit	KGATW0701HSI			●		●	●	●	●	●	●	
IAQ Accessories												
Filter Rack – Side Return for 1” Filters	KGAFR0201ALL	●	●	●	●	●	●	●	●	●	●	●
Filter Rack – Bottom Return for 1” Filters – 14.2” wide	KGBFR0401B14	●	●	●		●	●		●	●		●
Filter Rack – Bottom Return for 1” Filters – 17.5” wide	KGBFR0501B17		●	●	●	●	●		●	●		●
Filter Rack – Bottom Return for 1” Filters – 21.0” wide	KGBFR0601B21		●	●		●	●	●	●	●		●
Filter Rack – Bottom Return for 1” Filters – 24.5” wide	KGBFR0701B24		●	●		●	●		●	●	●	●
Filter Pack (6 pack) – Washable - 16x25x1	KGAWF1306UFR	●	●	●	●	●	●	●	●	●	●	●
Filter Pack (6 pack) – Washable - 24x25x1	KGAWF1506UFR	●	●	●	●	●	●	●	●	●	●	●
EZ-Flex Filter - 16” (406 mm)	EXPXXFIL0016	Use with EZXCAB–1016										
EZ-Flex Filter - 20” (508 mm)	EXPXXFIL0020	Use with EZXCAB–1020										
EZ-Flex Filter - 24” (610 mm)	EXPXXFIL0024	Use with EZXCAB–1024										
EZ-Flex Filter with End Caps - 16” (406 mm)	EXPXXUNV0016	Use with EZXCAB–1016										
EZ-Flex Filter with End Caps - 20” (508 mm)	EXPXXUNV0020	Use with EZXCAB–1020										
EZ-Flex Filter with End Caps - 24” (610 mm)	EXPXXUNV0024	Use with EZXCAB–1024										
Cartridge Media Filter - 16” (406 mm)	FILXXCAR0016	Use with FILCABXL–1016										
Cartridge Media Filter - 20” (508 mm)	FILXXCAR0020	Use with FILCABXL–1020										
Cartridge Media Filter - 24” (610 mm)	FILXXCAR0024	Use with FILCABXL–1024										
EZ Flex Cabinet Side or Bottom Return 4” Filters – 16”	EZXCABCC0016	●	●	●	●	●	●					
EZ Flex Cabinet Side or Bottom Return 4” Filters – 20”	EZXCABCC0020							●	●	●		
EZ Flex Cabinet Side or Bottom Return 4” Filters – 24”	FILCABXL0024										●	●

● = Used with the model furnace

915SA

AIR DELIVERY - CFM (BOTTOM RETURN WITH FILTER)

UNIT SIZE	RETURN-AIR CONNECTION	SPEED TAPS [2]	EXTERNAL STATIC PRESSURE (IN. W.C.) [6]									
			0.1	0.2	0.3	0.4	0.5	0.6	0.7	0.8	0.9	1.0
024026	SIDE/BOTTOM	Black	1000	945	895	835	775	705	635	560	**485**	**395**
		Yellow	750	695	640	575	515	455	390	**315**	**250**	- [7]
		Blue	675	620	560	500	440	380	310	**245**	- [7]	- [7]
		Red [5]	500	440	375	315	245	- [7]	- [7]	- [7]	- [7]	- [7]
030040	SIDE OR BOTTOM	Black	1100	1055	1010	960	**905**	**850**	**795**	**740**	**685**	**620**
		Yellow	955	915	875	830	790	740	695	645	590	**530**
		Blue	820	795	765	730	695	655	615	570	515	**460**
		Red	730	710	680	655	625	595	555	515	465	**400**
036040	SIDE OR BOTTOM	Black	1245	1195	1150	1100	1050	**1000**	**945**	**890**	**830**	**775**
		Yellow	1165	1120	1075	1030	980	925	870	815	760	710
		Orange	1045	1015	965	925	885	840	790	740	695	640
		Blue	1000	960	930	890	850	810	765	715	665	615
		Red	735	725	700	680	650	625	590	555	515	**470**
030060	SIDE OR BOTTOM	Black	1340	1295	1245	1190	1130	1065	1005	**895**	**815**	**725**
		Yellow	1035	1010	980	945	910	865	795	730	665	605
		Blue	845	825	810	785	755	710	670	625	570	515
		Red [5]	770	750	730	710	675	640	600	560	510	**455**
042060	SIDE OR BOTTOM	Black	1665	1615	1550	1485	1420	1345	1270	1190	1105	**985**
		Yellow	1340	1320	1295	1260	1215	1165	1110	1045	925	850
		Orange	1050	1045	1035	1015	995	960	915	845	785	725
		Blue	985	980	975	950	930	900	845	795	740	690
		Red [5]	735	720	700	675	650	620	595	560	**520**	**480**
048080	SIDE OR BOTTOM	Black	1870	1810	1740	1670	1600	1525	1440	**1355**	**1270**	**1180**
		Yellow	1525	1495	1460	1415	1365	1305	1240	1170	1090	990
		Orange	1375	1355	1330	1300	1260	1210	1155	1090	1025	940
		Blue	1045	1040	1030	1010	985	960	920	875	825	745
		Red [5]	880	865	850	835	810	785	750	715	665	605
060080	BOTTOM or TWO-SIDES [3,4]	Black	2360	2250	**2160**	**2065**	**1970**	**1880**	**1785**	**1685**	**1580**	**1455**
		Yellow	2100	2030	1960	1885	1805	1720	1635	1545	1440	1305
		Orange	1840	1810	1765	1725	1665	1590	1515	1430	1335	1240
		Blue	1705	1685	1660	1615	1570	1510	1445	1370	1280	1135
		Red	1425	1410	1385	1365	1335	1290	1245	1190	1120	1050
042100	SIDE OR BOTTOM	Black	1750	1705	1660	1605	1545	1475	1405	1305	1220	1140
		Blue	1550	1510	1470	1430	1380	1320	1245	1170	1095	1015
		Yellow [5]	1290	1255	1220	1180	1130	1075	1020	960	885	800
		Red [5]	1085	1045	1010	960	915	865	805	740	665	595
060100	BOTTOM or TWO-SIDES [3,4]	Black	2415	2330	**2245**	**2155**	**2065**	**1965**	**1865**	**1760**	**1645**	**1530**
		Yellow	2130	2075	2010	1945	1865	1785	1695	1600	1490	1375
		Orange	1830	1815	1785	1740	1685	1625	1550	1470	1370	1255
		Blue	1690	1680	1655	1620	1580	1530	1465	1385	1295	1185
		Red	1415	1405	1390	1370	1345	1305	1260	1200	1125	1050
060120	BOTTOM or TWO-SIDES [3,4]	Black	2440	2360	**2295**	**2215**	**2105**	**1975**	**1815**	**1710**	**1575**	**1405**
		Blue	2300	2245	2185	2090	2005	1855	1745	1635	1505	**1370**
		Yellow	1805	1780	1750	1705	1650	1595	1515	1430	1330	1230
		Orange [5]	1560	1550	1535	1505	1470	1420	1360	1285	1205	1130
		Red [5]	1390	1385	1370	1345	1320	1285	1230	1175	1105	1035
060140	BOTTOM or TWO-SIDES [3,4]	Black	**2410**	**2325**	**2230**	**2135**	**2035**	**1930**	**1820**	**1700**	**1575**	**1445**
		Blue	2250	2175	2100	2020	1930	1825	1715	1600	1485	**1370**
		Yellow [5]	1740	1725	1700	1660	1610	1550	1470	1390	1295	1190
		Orange [5]	1500	1495	1485	1465	1435	1390	1335	1265	1185	1090
		Red [5]	1350	1345	1335	1315	1290	1255	1210	1150	1080	995

NOTE:

1. A filter is required for each return–air inlet. Airflow performance includes a 3/4–in. (19 mm) washable filter media such as contained in a factory–authorized accessory filter rack. See accessory list. To determine airflow performance without this filter, assume an additional 0.1 in. w.c.. available external static pressure.
2. Blower speed taps are not always in the same order. Factory default blower connections are as follows:
   a. Heating airflow – BLUE (also used for Continuous Fan)
   b. Cooling airflow – BLACK (enabled when the Y terminal is energized)
   ADJUST THE BLOWER SPEED TAPS AS NECESSARY FOR THE PROPER AIR TEMPERATURE RISE FOR EACH INSTALLATION.
3. Airflows over 1800 CFM require bottom return, two–side return, or bottom and side return. A minimum filter size of 20" x 25" (508 x 635 mm) is required.
4. For upflow applications, air entering from one side into both the side of the furnace and a return air base counts as a side and bottom return.
5. Highlighted areas indicate that this airflow range is below the range allowed for heating. **THESE AIRFLOW RANGES MAY ONLY BE USED FOR COOLING.**
6. All airflows that are shown in **BOLD** exceed 0.58 watts per CFM at the given external static pressure.
7. The "–" entry indicates an unstable operating condition.

MAXIMUM ALLOWABLE EXPOSED VENT LENGTHS IN UNCONDITIONED SPACE - FT.

Winter Design Temp °F	Unit Size	26,000* BTUH					
		0" Insulation		3/8" Insulation		1/2" Insulation	
	Pipe Dia. In.	1½	2	1½	2	1½	2
	20	20	20	50	45	60	50
	0	5	5	25	20	30	25
	-20			15	10	20	15
	-40			10	5	15	10

Winter Design Temp °F	Unit Size	40,000* BTUH									60,000 BTUH											
		Uninsulated			3/8-in. Insulation			1/2-in. Insulation			Uninsulated				3/8-in. Insulation				1/2-in. Insulation			
	Pipe Dia. in.	1 ½	2	2 ½	1 ½	2	2 ½	1 ½	2	2 ½	1 ½	2	2 ½	3	1 ½	2	2 ½	3	1 ½	2	2 ½	3
	20	20	20	20	20	50	45	20	60	50	20	30	30	25	20	75	65	60	20	85	75	65
	0	10	5	5	20	25	20	20	30	25	15	15	10	10	20	40	30	25	20	45	40	30
	-20	5			20	15	10	20	20	15	10	5			20	25	20	15	20	30	25	20
	-40				15	10	5	15	15	10	5				20	15	15	10	20	20	15	10

Winter Design Temp °F	Unit Size	80,000 BTUH														
		Uninsulated					3/8-in. Insulation					1/2-in. Insulation				
	Pipe Dia. in.	1 ½	2	2 ½	3	4	1 ½	2	2 ½	3	4	1 ½	2	2 ½	3	4
	20	15	40	40	35	30	15	50	90	75	65	15	50	70	70	70
	0	15	20	15	10	5	15	50	45	35	30	15	50	50	40	35
	-20	15	10	5			15	35	30	20	15	15	40	30	25	15
	-40	10	5				15	25	20	15	5	15	30	25	20	10

Winter Design Temp °F	Unit Size	100,000 BTUH											
		Uninsulated				3/8-in. Insulation				1/2-in. Insulation			
	Pipe Dia. in.	2	2 ½	3	4	2	2 ½	3	4	2	2 ½	3	4
	20	20	50	40	35	20	80	95	80	20	80	105	90
	0	20	20	15	10	20	55	45	35	20	65	55	45
	-20	15	10	5		20	35	30	20	20	45	35	25
	-40	10	5			20	25	20	10	20	30	25	15

Winter Design Temp °F	Unit Size	120,000 BTUH									140,000 BTUH								
		Uninsulated			3/8-in. Insulation			1/2-in. Insulation			Uninsulated			3/8-in. Insulation			1/2-in. Insulation		
	Pipe Dia. in.	2 ½	3	4	2 ½	3	4	2 ½	3	4	2 ½	3	4	2 ½	3	4	2 ½	3	4
	20	10	50	40	10	75	95	10	75	105	5	55	50	5	65	105	5	65	125
	0	10	20	15	10	55	45	10	65	50	5	25	15	5	65	50	5	65	60
	-20	10	10		10	35	25	10	45	30	5	10	5	5	45	30	5	50	40
	-40	10	5		10	25	15	10	30	20	5	5		5	30	20	5	35	25

MAXIMUM ALLOWABLE EXPOSED VENT LENGTHS IN UNCONDITIONED SPACE - METERS

	Unit Size	26,000* BTUH					
		0" Insulation		3/8" Insulation		1/2" Insulation	
	Pipe Dia. mm	38	51	38	51	38	51
Winter Design Temp °C	-7	6.1	6.1	15.2	13.7	18.3	15.2
	-18	1.5	1.5	7.6	6.1	9.1	7.6
	-29			4.6	3.0	6.1	4.6
	-40			3.0	1.5	4.6	3.0

	Unit Size	40,000* BTUH									60,000 BTUH											
		Uninsulated			3/8-in. Insulation			1/2-in. Insulation			Uninsulated				3/8-in. Insulation				1/2-in. Insulation			
	Pipe Dia. mm	38	51	64	38	51	64	38	51	64	38	51	64	76	38	51	64	76	38	51	64	76
Winter Design Temp °C	-7	6.1	6.1	6.1	6.1	15.2	13.7	6.1	18.3	15.2	6.1	9.1	9.1	7.6	6.1	22.9	19.8	18.3	6.1	25.9	22.9	19.8
	-18	3.0	1.5	1.5	6.1	7.6	6.1	6.1	9.1	7.6	4.6	4.6	3.0	3.0	6.1	12.2	9.1	7.6	6.1	13.7	12.2	9.1
	-29	1.5			6.1	4.6	3.0	6.1	6.1	4.6	3.0	1.5			6.1	7.6	6.1	4.6	6.1	9.1	7.6	6.1
	-40				4.6	3.0	1.5	4.6	4.6	3.0	1.5				6.1	4.6	4.6	3.0	6.1	6.1	4.6	3.0

	Unit Size	80,000 BTUH														
		Uninsulated					3/8-in. Insulation					1/2-in. Insulation				
	Pipe Dia. mm	38	51	64	76	102	38	51	64	76	102	38	51	64	76	102
Winter Design Temp °C	-7	4.6	12.2	12.2	10.7	9.1	4.6	15.2	27.4	22.9	19.8	4.6	15.2	21.3	21.3	21.3
	-18	4.6	6.1	4.6	3.0	1.5	4.6	15.2	13.7	10.7	9.1	4.6	15.2	15.2	12.2	10.7
	-29	4.6	3.0	1.5			4.6	10.7	9.1	6.1	4.6	4.6	12.2	9.1	7.6	4.6
	-40	3.0	1.5				4.6	7.6	6.1	4.6	1.5	4.6	9.1	7.6	6.1	3.0

	Unit Size	100,000 BTUH											
		Uninsulated				3/8-in. Insulation				1/2-in. Insulation			
	Pipe Dia. mm	51	64	76	102	51	64	76	102	51	64	76	102
Winter Design Temp °C	-7	6.1	15.2	12.2	10.7	6.1	24.4	28.9	24.4	6.1	24.4	32.0	27.4
	-18	6.1	6.1	4.6	3.0	6.1	16.8	13.7	10.7	6.1	19.8	16.7	13.7
	-29	4.6	3.0	1.5		6.1	10.7	9.1	6.1	6.1	13.7	10.7	7.6
	-40	3.0	1.5			6.1	7.6	6.1	3.0	6.1	9.1	7.6	4.6

	Unit Size	120,000 BTUH									140,000 BTUH								
		Uninsulated			3/8-in. Insulation			1/2-in. Insulation			Uninsulated			3/8-in. Insulation			1/2-in. Insulation		
	Pipe Dia. mm	64	76	102	64	76	102	64	76	102	64	76	102	64	76	102	64	76	102
Winter Design Temp °C	-7	3.0	15.2	12.2	3.0	22.9	28.9	3.0	22.9	32.0	1.5	16.7	15.2	1.5	19.8	32.0	1.5	19.8	38.1
	-18	3.0	6.1	4.6	3.0	16.8	13.7	3.0	19.8	15.2	1.5	7.6	4.6	1.5	19.8	15.2	1.5	19.8	18.3
	-29	3.0	3.0		3.0	10.7	7.6	3.0	13.7	9.1	1.5	3.0	1.5	1.5	13.7	9.1	1.5	15.2	12.2
	-40	3.0	1.5		3.0	7.6	4.6	3.0	9.1	6.1	1.5	1.5		1.5	9.1	6.1	1.5	35	7.6

MAXIMUM EQUIVALENT VENT LENGTHS

Table 1 – Maximum Equivalent Vent Length - Ft.

NOTE: Maximum Equivalent Vent Length (MEVL) includes standard and concentric vent termination and does NOT include elbows. Use Table 2 - Deductions from Maximum Equivalent Vent Length to determine allowable vent length for each application.

Unit Size		26,000 [2]		40,000 [1]			60,000 [2]				80,000					100,000				120,000			140,000		
Altitude (feet)	Pipe Dia. (in)	1 ½	2	1 ½	2	2 ½	1 ½	2	2 ½	3	1 ½	2	2 ½	3	4	2	2 ½	3	4	2 ½	3	4	2 ½	3	4
	0 – 2000	70	200	40	155	185	20	100	175	200	15	55	130	175	200	20	80	175	200	10	75	185	5	65	155
	2001 – 3000	65	190	35	150	175		95	165	185	10	49	125	165	185	15	75	165	185		70	175	N/A	60	140
	3001 – 4000	60	175	30	135	160	16	90	155	175			115	155	175			155	175	5	65	165			120
	4001 – 4500	55	160	25	130	155	15	85	150	170		44	110	150	165	10	70		170	N/A	60	160		50	110
	4501 – 5000				125	145		80	145	165				145	160		65	150	165					45	100
	5001 – 6000	50	145	20	120	130		75	140	155		41	100	135	150			140	155			155		35	80
	6001 – 7000	45	135	15	110	120	13	70	130	145	N/A	38	90	125	140		60	135	145		50	140		30	65
	7001 – 8000	40	120	10	100	110	10	65	120	135		36		120	125	N/A	55	125	135		46	130		25	45
	8001 – 9000	35	110		90	95	5	60	115	125		33	80	110	115		50	115	125		43	120		15	30
	9001 – 10000	30	95	5	80	85	N/A	55	105	115		30	75	100	105		45	100	115		39	115		10	15

Maximum Equivalent Vent Length – Meters

Unit Size		26,000 [2]		40,000 [1]			60,000 [2]				80,000					100,000				120,000			140,000		
Altitude (meters)	Pipe Dia. (mm)	38	51	38	51	64	38	51	64	76	38	51	64	76	102	51	64	76	102	64	76	102	64	76	102
	0 – 610	21.3	60.9	12.1	47.2	56.3	6.0	30.4	53.3	60.9	4.5	16.7	39.6	53.3	60.9	6.0	24.3	53.3	60.9	3.0	22.8	56.3	1.5	19.8	47.2
	611 – 914	19.8	57.9	10.6	45.7	53.3		28.9	50.2	56.3	3.0	14.9	38.1	50.2	56.3	4.5	22.8	50.2	56.3		21.3	53.3	NA	18.2	42.6
	915 – 1219	18.2	53.3	9.1	41.1	48.7	4.8	27.4	47.2	53.3			35.0	47.2	53.3			47.2	53.3	1.5	19.8	50.2			36.5
	1220 – 1370	16.7	48.7	7.6	39.6	47.2	4.5	25.9	45.7	51.8		13.4	33.5	45.7	50.2	3.0	21.3		51.8	NA	18.2	48.7		15.2	33.5
	1371 – 1524				38.1	44.1		24.3	44.1	50.2				44.1	48.7		19.8	45.7	50.2					13.7	30.4
	1525 – 1829	15.2	44.1	6.0	36.5	39.6		22.8	42.6	47.2		12.4	30.4	41.1	45.7			42.6	47.2			47.2		10.6	24.3
	1830 – 2134	13.7	41.1	4.5	33.5	36.5	3.9	21.3	39.6	44.1	NA	11.5	27.4	38.1	42.6		18.2	41.1	44.1		15.2	42.6		9.1	19.8
	2135 – 2438	12.1	36.5	3.0	30.4	33.5	3.0	19.8	36.5	41.1		10.9		36.5	38.1	NA	16.7	38.1	41.1		14.0	39.6		7.6	13.7
	2439 – 2743	10.6	33.5		27.4	28.9	1.5	18.2	35.0	38.1		10.0	24.3	33.5	35.0		15.2	35.0	38.1		13.1	36.5		4.5	9.1
	2744 – 3048	9.1	28.9	1.5	24.3	25.9	NA	16.7	32.0	35.0		9.1	22.8	30.4	32.0		13.7	30.4	35.0		11.8	35.0		3.0	4.5

NOTES:

1. Inducer Outlet Restrictor disk (P/N 337683–401; 1.25–in. (32 mm) Dia.) shipped in the loose parts bag or available through Replacement Components required under 10–ft. (3 M) TEVL in all orientations. Required for installations from 0 – 2000 (0 to 610 M) above sea level. Failure to use an outlet restrictor may result in flame disturbances or flame sense lock–out.
2. Inducer Outlet Restrictor disk (P/N 337683–401; 1.25–in. (32 mm) Dia.) shipped in the loose parts bag or available through Replacement Components required for no greater than 5–ft. (1.5 M) TEVL in downflow and horizontal orientations only. Required for installations from 0 – 2000 (0 to 610 M) above sea level.

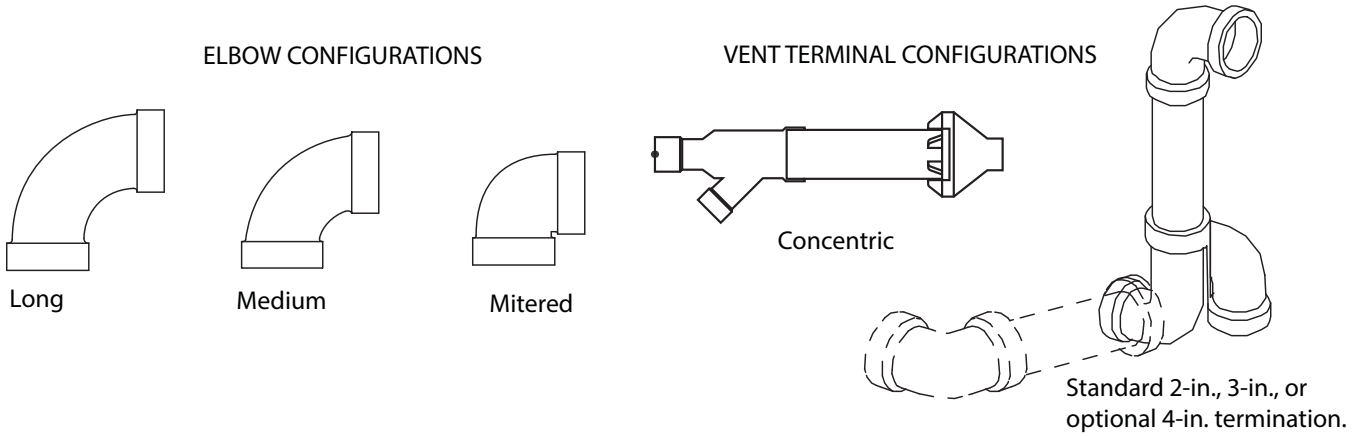

A13110

Table 2 – Deductions from Maximum Equivalent Vent Length - Ft. (M)

Pipe Diameter (in):	1-1/2		2		2-1/2		3		4	
Mitered 90° Elbow	8	(2.4)	8	(2.4)	8	(2.4)	8	(2.4)	8	(2.4)
Medium Radius 90° Elbow	5	(1.5)	5	(1.5)	5	(1.5)	5	(1.5)	5	(1.5)
Long Radius 90° Elbow	3	(0.9)	3	(0.9)	3	(0.9)	3	(0.9)	3	(0.9)
Mitered 45° Elbow	4	(1.2)	4	(1.2)	4	(1.2)	4	(1.2)	4	(1.2)
Medium Radius 45° Elbow	2.5	(0.8)	2.5	(0.8)	2.5	(0.8)	2.5	(0.8)	2.5	(0.8)
Long Radius 45° Elbow	1.5	(0.5)	1.5	(0.5)	1.5	(0.5)	1.5	(0.5)	1.5	(0.5)
Tee	16	(4.9)	16	(4.9)	16	(4.9)	16	(4.9)	16	(4.9)

NOTES:

1. Use only the smallest diameter pipe possible for venting. Over–sizing may cause flame disturbance or excessive vent terminal icing or freeze–up.
2. NA – Not allowed. Pressure switch will not close, or flame disturbance may result.
3. Vent sizing for Canadian installations over 4500 ft. (1370 M) above sea level are subject to acceptance by the local authorities having jurisdiction.
4. Size both the combustion air and vent pipe independently, then use the larger size for both pipes.
5. Assume the two 45° elbows equal one 90° elbow. Wide radius elbows are desirable and may be required in some cases.
6. Elbow and pipe sections within the furnace casing and at the vent termination should not be included in vent length or elbow count.
7. The minimum pipe length is 5 ft. (2 M) linear feet (meters) for all applications.
8. Use 3–in. (76 mm) diameter vent termination kit for installations requiring 4–in. (102 mm) diameter pipe.

Venting System Length Calculations

The Total Equivalent Vent Length (TEVL) for **EACH** combustion air or vent pipe equals the length of the venting system, plus the equivalent length of elbows used in the venting system from Table 2.

Standard vent terminations or factory accessory concentric vent terminations count for zero deduction.

See vent system manufacturer's data for equivalent lengths of flexible vent pipe or other termination systems. **DO NOT ASSUME** that one foot of flexible vent pipe equals one foot of straight PVC/ABS DWV vent pipe.

Compare the Total Equivalent Vent Length to the Maximum Equivalent Vent Lengths in Table 1.

Example 1

A direct-vent 60,000 BTUH furnace installed at 2100 ft. (640M). Venting system includes **FOR EACH PIPE:**
70 feet (22 M) of vent pipe, 65 feet (20 M) of combustion air inlet pipe, (3) 90º long-radius elbows, (2) 45º long-radius elbows, and a factory accessory concentric vent kit.

Can this application use 2" (50 mm ND) PVC/ABS DWV vent piping?

Measure the required linear length of air inlet and vent pipe; insert the longest of the two here					70 ft. (22 M)	Use length of the longer of the vent or air inlet piping system
Add equiv length of (3) 90º long-radius elbows (use the highest number of elbows for either the vent or inlet pipe)	3	x	3 ft. (0.9 M)	=	9 ft. (2.7 M)	From Table 2
Add equiv length of (2) 45º long-radius elbows (use the highest number of elbows for either the vent or inlet pipe)	2	x	1.5 ft. (0.5 M)	=	3 ft. (0.9 M)	From Table 2
Add equiv length of factory concentric vent term					0 ft.	From Table 2
Add correction for flexible vent pipe, if any					0 ft.	From Vent Manufacturer's instructions; zero for PVC/ABS DWV
Total Equivalent Vent Length (TEVL)					82 ft. (25 M)	Add all of the above lines
Maximum Equivalent Vent Length (MEVL)					95 ft. (29 M)	For 2" pipe from Table 1
Is TEVL less than MEVL?					**YES**	**Therefore, 2" pipe MAY be used**

Example 2

A direct-vent 60,000 BTUH furnace installed at 2100 ft. (640M). Venting system includes **FOR EACH PIPE:**
100 feet (30 M) of vent pipe, 95 feet (29 M) of combustion air inlet pipe, (3) 90º long-radius elbows, and a polypropylene concentric vent kit. Also includes 20 feet (6.1 M) of flexible polypropylene vent pipe, included within the 100 feet (30 M) of vent pipe.

VERIFY FROM POLYPROPYLENE VENT MANUFACTURER'S INSTRUCTIONS for the multiplier correction for flexible vent pipe.

Can this application use 60mm o.d. (2") polypropylene vent piping? If not, what size piping can be used?

Measure the required linear length of **RIGID** air inlet and vent pipe; insert the longest of the two here: 100 ft. Of rigid pipe – 20 ft. Of flexible pipe				=	80 ft. (24 M)	Use length of the longer of the vent or air inlet piping system
Add equiv length of (3) 90º long-radius elbows (use the highest number of elbows for either the vent or inlet pipe)	3	x	5 ft. (1.5 M)	=	15 ft. (4.6 M)	Example from polypropylene vent manufacturer's instructions, Verify from vent manufacturer's instructions.
Add equiv length of 45º long-radius elbows (use the highest number of elbows for either the vent or inlet pipe)	0	x		=	0 ft. (0 M)	
Add equiv length of factory concentric vent term	9	x	3.3 ft (0.9 M)	=	30 ft. (9 M)	
Add correction for flexible vent pipe, if any	2*	x	20 ft. (6.1 M)	=	36 ft. (11 M)	
* VERIFY FROM VENT MANUFACTURER'S INSTRUCTIONS; For example only, assume 1 meter of flexible 60mm (2") or 80mm (3") polypropylene pipe equals 2.0 meters (6.5 ft.) of PVC/ABS pipe.						
Total Equivalent Vent Length (TEVL)					165 ft. (50 M)	Add all of the above lines
Maximum Equivalent Vent Length (MEVL)					95 ft. (29 M)	For 2" pipe from Table 1
Is TEVL less than MEVL?					**NO**	**Therefore, 60mm (2") pipe may NOT be used; try 80mm (3")**
Maximum Equivalent Vent Length (MEVL)					185 ft. (57 M)	For 3" pipe from Table 1
Is TEVL less than MEVL?					**YES**	**Therefore, 80mm (3") pipe MAY be used**

RETURN AIR TEMPERATURE

This furnace is designed for continuous return-air minimum temperature of 60°F (15°C) db or intermittent operation down to 55°F (13°C) db such as when used with a night setback thermometer. Return-air temperature must not exceed 80°F (27°C) db. Failure to follow these return air limits may affect reliability of heat exchangers, motors and controls.

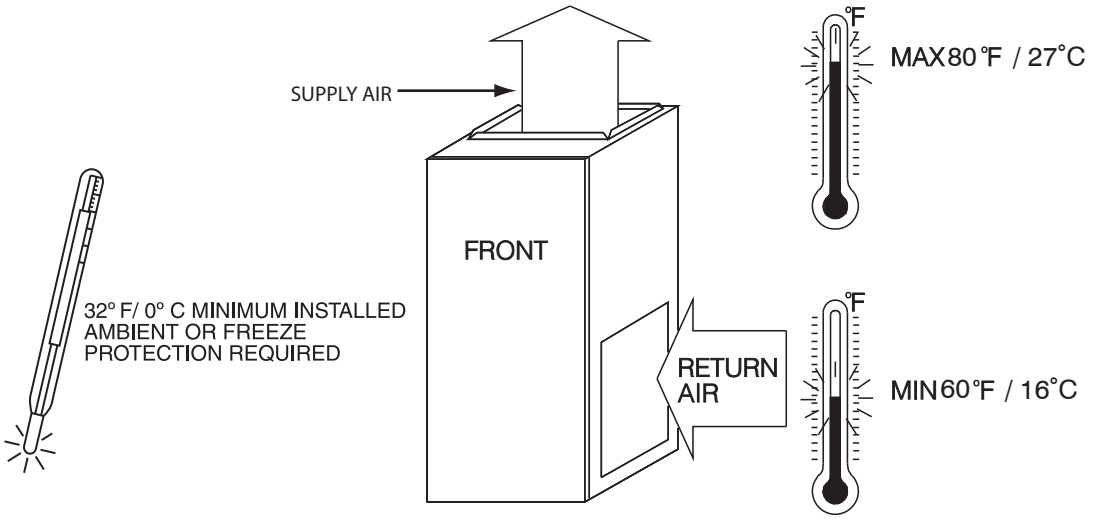

A10490

MINIMUM CLEARANCES TO COMBUSTIBLE MATERIALS

POSITION	CLEARANCE
Rear	0 (0 mm)
Front (Combustion air openings in furnace and in structure)	1 in. (25 mm)
Required for service**	24 in. (610 mm)*
All Sides of Supply Plenum**	1 in. (25 mm)
Sides	0 (0 mm)
Vent	0 (0 mm)
Top of Furnace	1 in. (25 mm)

* Recommended
**Consult your local building codes

COMBUSTION-AIR PIPE FOR NON-DIRECT (1-PIPE) VENT APPLICATION

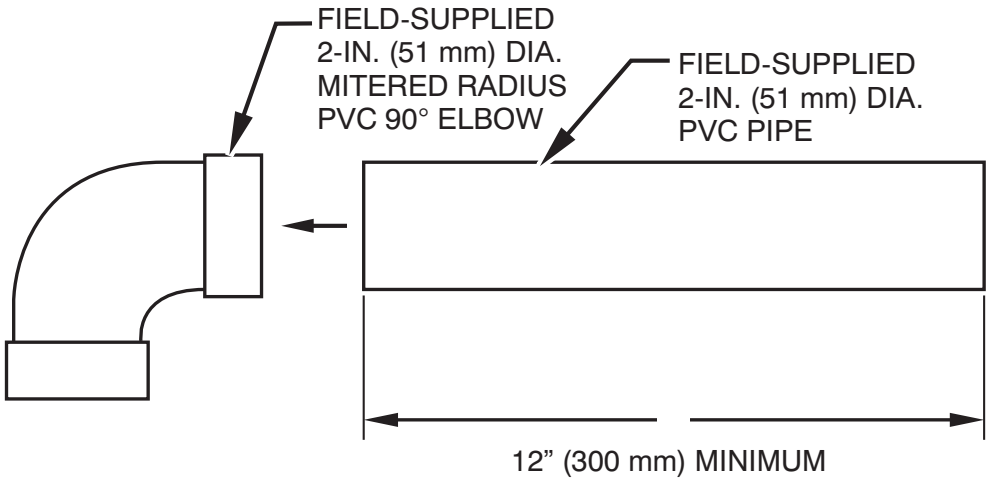

A12376

NOTE: See Installation Instructions for specific venting configurations.

915SA

DOWNFLOW SUBBASE

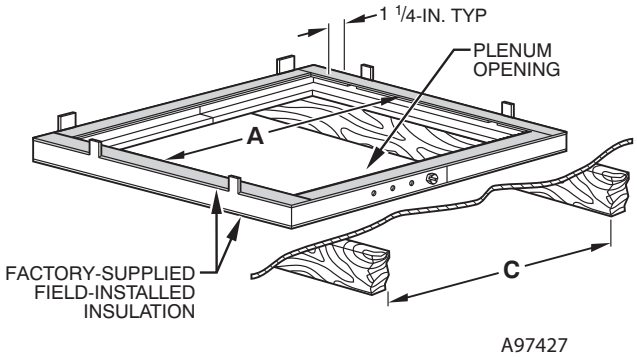

Assembled

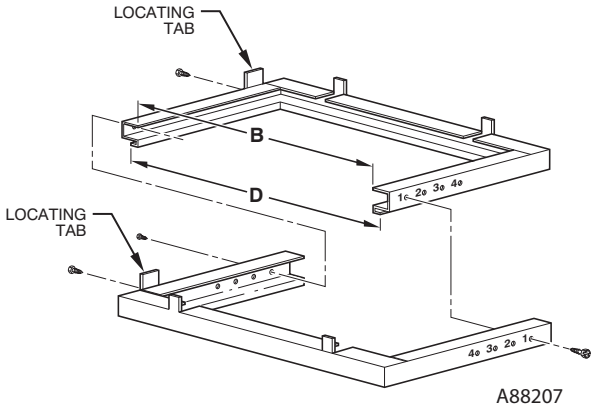

Disassembled

915SA

DIMENSIONS (IN. / MM)						
FURNACE CASING WIDTH	FURNACE IN DOWNFLOW APPLICATION	PLENUM OPENING*		FLOOR OPENING		HOLE NO. FOR WIDTH ADJUSTMENT
		A	B	C	D	
14–3/16 (360)	Furnace with or without Cased Coil Assembly or Coil Box	11–3/16 (322)	19 (483)	13–7/16 (341)	20–5/8 (600)	4
17–1/2 (445)	Furnace with or without Cased Coil Assembly or Coil Box	15–1/8 (384)	19 (483)	16–3/4 (426)	20–5/8 (600)	3
21 (533)	Furnace with or without Cased Coil Assembly or Coil Box	18–5/8 (396)	19 (483)	20–1/4 (514)	20–5/8 (600)	2
24–1/2 (622)	Furnace with or without Cased Coil Assembly or Coil Box	22–1/8 (562)	19 (483)	23–3/4 (603)	20–5/8 (600)	1

*The plenum should be constructed 1/4–in. (6 mm) smaller in width and depth than the plenum dimensions shown above.

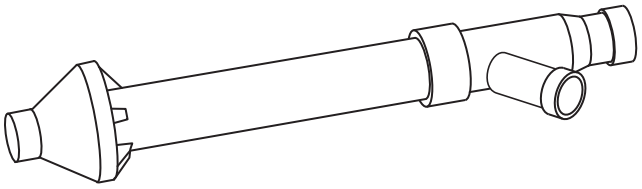

Concentric Vent Kit

A93086

A concentric vent kit allows vent and combustion-air pipes to terminate through a single exit in a roof or side wall. One pipe runs inside the other allowing venting through the inner pipe and combustion air to be drawn in through the outer pipe.

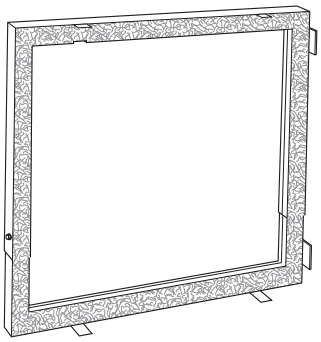

Downflow Subbase

A88202

One base fits all furnace sizes. The base is designed to be installed between the furnace and a combustible floor when no coil box is used or when a coil box other than a Bryant cased coil is used. It is CSA design certified for use with Bryant branded furnaces when installed in downflow applications.

MEDIA FILTER CABINET

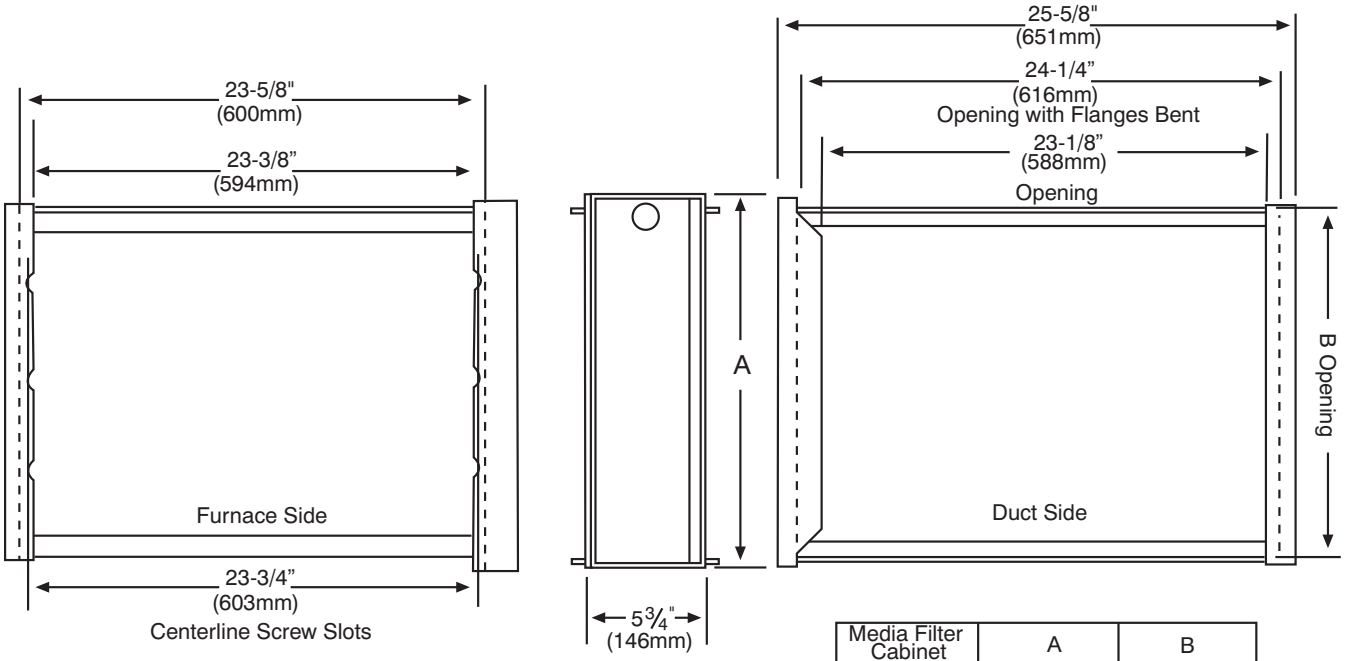

Media Filter Cabinet	A	B
16" (406mm)	17" (432mm)	16" (406mm)
20" (508mm)	21" (533mm)	20" (508mm)
24" (610mm)	25" (635mm)	24" (610mm)

NOTE: Media cabinet is matched to the bottom opening on furnace. May also be used for side return.

A12428

915SA

TYPICAL WIRING SCHEMATIC

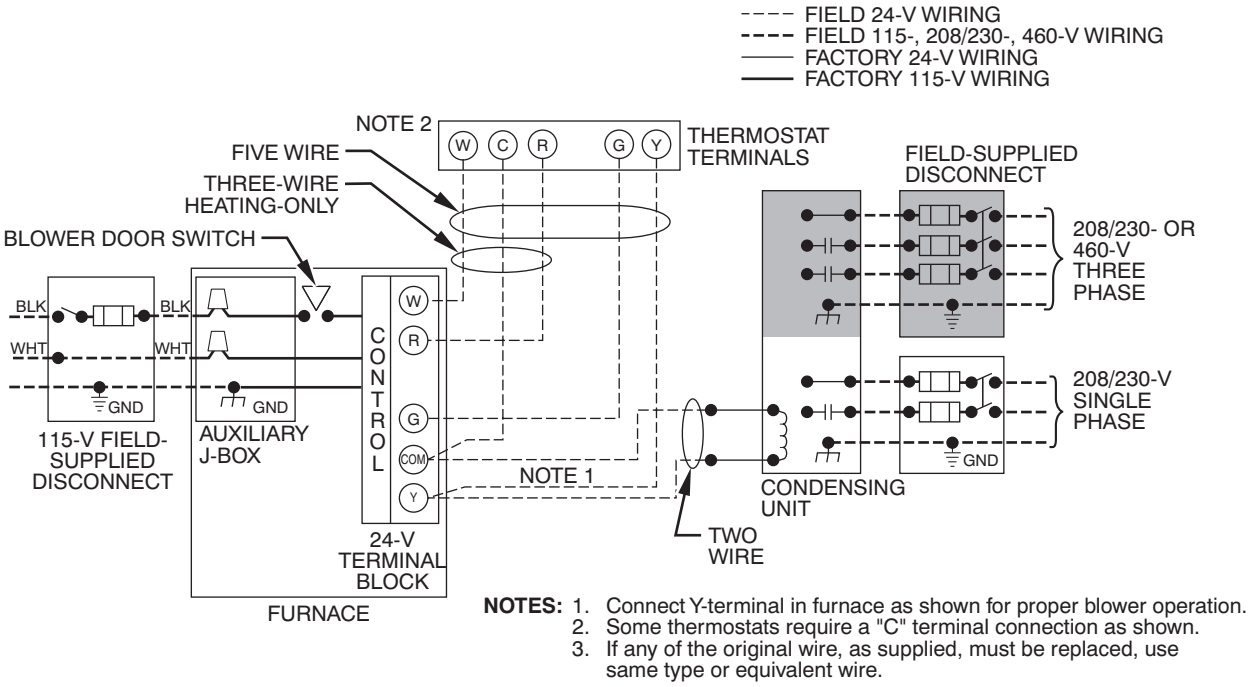

NOTES: 1. Connect Y-terminal in furnace as shown for proper blower operation.
2. Some thermostats require a "C" terminal connection as shown.
3. If any of the original wire, as supplied, must be replaced, use same type or equivalent wire.

A11387

DIMENSIONAL DRAWING

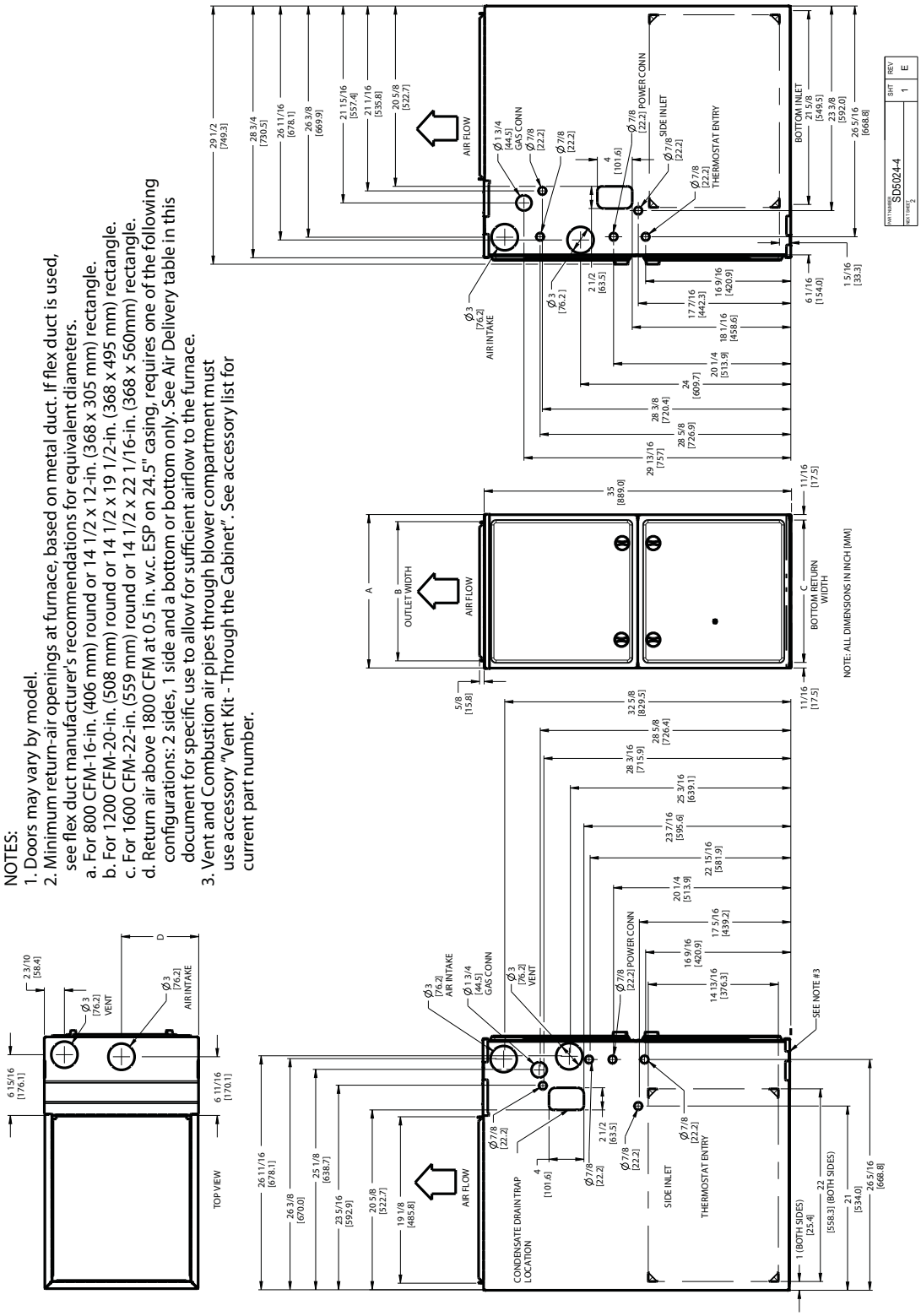

915SA FURNACE SIZE	A CABINET WIDTH	B OUTLET WIDTH	C BOTTOM INLET WIDTH	D AIR INTAKE	SHIP WT. LB (KG)
24026	14-3/16 (361)	12-1/2 (319)	12-9/16 (322)	7-1/8 (181)	118.0 (53.5)
30040	14-3/16 (361)	12-1/2 (319)	12-9/16 (322)	7-1/8 (181)	123.0 (55.9)
30060					127.0 (57.7)
36040	17-1/2 (445)	15-7/8 (403)	16 (406)	8-3/4 (222)	134.0 (60.9)
42060					144.0 (65.4)
48080					154.0 (70.0)
60080	21 (533)	19-3/8 (492)	19-1/2 (495)	10-1/2 (267)	161.5 (73.4)
42100					168.5 (76.6)
60100					168.5 (76.6)
60120	24-1/2 (622)	22-7/8 (581)	23 (584)	12-1/4 (311)	186.0 (84.5)
60140					190.0 (86.4)

GUIDE SPECIFICATIONS

General

System Description

Furnish a _____ 4-way multipoise gas-fired condensing furnace for use with natural gas or propane (factory-authorized conversion kit required for propane).

Quality Assurance

Unit will be designed, tested and constructed to the current ANSI Z 21.47/CSA 2.3 design standard for gas-fired central furnaces.

Unit will be third party certified by CSA to the current ANSI Z 21.47/CSA 2.3 design standard for gas-fired central furnaces. Unit will carry the CSA Blue Star® and Blue Flame® labels. Unit efficiency testing will be performed per the current DOE test procedure as listed in the Federal Register.

Unit will be certified for capacity and efficiency and listed in the latest AHRI Consumer's Directory of Certified Efficiency Ratings.

Unit will carry the current Federal Trade Commission Energy Guide efficiency label.

Delivery, Storage, and Handling

Unit will be shipped as single package only and is stored and handled per unit manufacturer's recommendations.

Warranty (for inclusion by specifying engineer)

U.S. and Canada only. Warranty certificate available upon request.

Equipment

Blower Wheel and PSC Blower Motor

Galvanized blower wheel shall be centrifugal type, statically and dynamically balanced. Blower motor of PSC type shall be permanently lubricated with sleeve bearings, of _____hp, and have multiple speeds from 500-1150 RPM operating only when 115-VAC motor inputs are provided. Blower motor shall be direct drive and soft mounted to the blower housing to reduce vibration transmission.

Filters

Furnace shall have reusable-type filters. Filter shall be _____ in. (mm) X _____ in. (mm). An accessory highly efficient Media Filter is available as an option. _____ Media Filter.

Casing

Casing shall be of .030 in. thickness minimum, pre-painted steel.

Draft Inducer Motor

Draft inducer motor shall be single-speed PSC design.

Primary Heat Exchangers

Primary heat exchangers shall be 3-Pass corrosion-resistant aluminized steel of fold-and-crimp sectional design and applied operating under negative pressure.

Secondary Heat Exchangers

Secondary heat exchangers shall be of a stainless steel flow-through of fin-and-tube design and applied operating under negative pressure.

Controls

Controls shall include a micro-processor-based integrated electronic control board with at least 16 service troubleshooting codes displayed via diagnostic flashing LED light on the control, a self-test feature that checks all major functions of the furnace, and a replaceable automotive-type circuit protection fuse. Multiple operational settings available, including blower speeds for heating and cooling. Continuous fan speed is the same as the selected heating speed.

Operating Characteristics

Heating capacity shall be _____ Btuh input; _____ Btuh output capacity.

Fuel Gas Efficiency shall be _____AFUE.

Air delivery shall be _____ cfm minimum at 0.50 in. W.C. external static pressure.

Dimensions shall be: depth_____in. (mm); width _____in. (mm); height_____in. (mm) (casing only). Height shall be_____in. (mm) with A/C coil and _____in. (mm) overall with plenum.

Electrical Requirements

Electrical supply shall be 115 volts, 60 Hz, single-phase (nominal). Minimum wire size shall be _____AWG; maximum fuse size of HACR-type designated circuit breaker shall be _____ amps.

Special Features

Refer to section of the product data identifying accessories and descriptions for specific features and available enhancements.

©2017 Bryant Heating & Cooling Systems ● 7310 W. Morris St. ● Indianapolis, IN 46231 Edition Date: 02/17 **Catalog No. PDS915SA−09**

Manufacturer reserves the right to discontinue, or change at any time, specifications or designs without notice and without incurring obligations. Replaces: PDS915SA−08