Q5H9V
QuietComfort® 19 Variable Speed Heat Pump with R-454B Refrigerant and SmartSense™
2 to 5 Nominal Tons

PRODUCT DATA

The Q5H9V is another breakthrough product providing up to 10 HSPF2 heating efficiency and up to 19 SEER2 cooling efficiency. The variable speed capacity control results in strong heating capacity as the outdoor temperature drops resulting in less reliance on auxiliary heat. Lower speed operation is available when needed in cooling for enhanced comfort and dehumidification.

This product has been designed and manufactured to meet Energy Star® criteria for energy efficiency when matched with appropriate coil components. It is also certified as a variable capacity system with native control, in accordance with the Controls Verification Procedure (CVP). The product is designated as Demand Response ready DR-ready: OpenADR 2.0 as defined in AHRI Standard 1380. Refer to the AHRI directory (www.ahridirectory.org) for the most up-to-date ratings information.

Industry leading Features / Benefits

Energy Efficiency
- Up to 19 SEER2, 14 EER2, 10 HSPF2
- Indoor air quality accessories available

Sound
- Sound level as low as 57 dBA in low speed

Comfort
- Variable speed compressor with capacity range from 25-100%
- System supports Thermidistat or standard 2-stage thermostat controls.

Reliability
- Non-ozone depleting, low global warming potential R-454B refrigerant
- USB-enabled firmware updates
- High pressure switch
- Suction and discharge pressure transducer
- Electronic expansion valve (EXV) for optimum heating performance
- Filter drier (field installed)
- Internal compressor stator heat standard
- Balanced refrigeration system for maximum reliability
- When pairing with a SmartSense-enabled Ion Gray Smart Thermostat, unlock additional features such as additional speeds and OTA (over the air) firmware updates

Durability
Protection Package:
- Solid, durable sheet metal construction
- Baked-on, complete outer coverage, powder coat paint

Applications
- Heating mode operation down to -10°F (-23.3°C) outdoor ambient temperature.
- Cooling mode operation up to 125°F (51.7°C) outdoor ambient temperature.
- Long-line - up to 250 feet (76.2 m) total equivalent length, up to 200 feet (60.7 m) outdoor above indoor, or up to 80 ft. (24.4 m) indoor above outdoor (See Long Line Guide for more information.)
- Low ambient cooling down to 32°F (0°C) with no additional kits required.

MODEL NUMBER NOMENCLATURE

Q	5	H	9	V	24	A	K	A	A	A
Brand **Q** = ICP Commercial	**Refrigerant** **5**= R-454B	**Type** **H** = HP	**SEER2** **9**= 19 SEER2	**OD Design Type** **V** = Variable Speed	**Nominal Capacity** **24** = 2 Tons **36** = 3 Tons **48** = 4 Tons **60** = 5 Tons	**Feature** A = Standard	**Voltage** K = 208--230-60-1	**Special Feature** A = Standard	**Region** A = Standard HP	**Major Series** A = Initial

Use of the AHRI Certified TM Mark indicates a manufacturer's participation in the program For verification of certification for individual products, go to www.ahridirectory.org.

This product has been designed and manufactured to meet Energy Star® criteria for energy efficiency when matched with appropriate coil components. However, proper refrigerant charge and proper air flow are critical to achieve rated capacity and efficiency. Installation of this product should follow all manufacturing refrigerant charging and air flow instructions. **Failure to confirm proper charge and air flow may reduce energy efficiency and shorten equipment life.**

CATALOG ORDERING NUMBERS

Size	Model Number
24	Q5H9V24AKAAA
36	Q5H9V36AKAAA
48	Q5H9V48AKAAA
60	Q5H9V60AKAAA

STANDARD FEATURES

FEATURES	Unit Size			
	24	**36**	**48**	**60**
R-454B Refrigerant	X	X	X	X
Variable Speed Rotary Compressor	X	X	X	X
Air-Cooled Variable Frequency Drive	X	X	X	X
Factory Provided, Field-Installed Filter Drier	X	X	X	X
Front-Seating Service Valves	X	X	X	X
In-unit Pressure and Temperature Protection	X	X	X	X
Suction and Discharge Pressure Transducers	X	X	X	X
High Pressure Switch	X	X	X	X
Compressor Stator Heat	X	X	X	X
Sound Blanket	X	X	X	X
Outdoor Air Temperature Sensor	X	X	X	X
Long Line Capability	X	X	X	X

X = Standard

AHRI RATINGS

NOTE: Ratings contained in this document are subject to change at any time.

For AHRI ratings certificates, please refer to the AHRI directory www.ahridirectory.org
Additional ratings and system combinations can be accessed via the Ratings Database here: ICP Commercial Ratings

PHYSICAL DATA

UNIT SIZE	24	36	48	60
COMPRESSOR TYPE	Variable Speed Rotary			
REFRIGERANT	R-454B			
Charge lb* (kg)	10 (4.54)	11.9 (5.40)	12.7 (5.76)	13.2 5.99)
Outdoor Htg Exp. Device	EXV	EXV	EXV	EXV
COND FAN	Forward Swept Propeller Type, Direct Drive			
Air Discharge	Vertical			
Maximum Air Qty (CFM)	5000	5000	5000	5000
Motor HP	1/3	1/3	1/3	1/3
Motor RPM	200-800	200-800	200-800	200-800
COND COIL				
Face Area (sq ft.)	22.6	25.1	30.1	30.1
Fins per In.	20	20	20	20
Rows	2	2	2	2
Circuits	9	8	12	12
VALVE CONNECT. (In. ID)				
Vapor	3/4	7/8	7/8	7/8
Liquid	3/8			
REFRIGERANT TUBES† (In. OD)				
Rated Vapor†	3/4	7/8	1-1/8	1 - 1/8
Max Rated Liquid Line‡	3/8			

*.For 15 ft. lineset
†.Units are rated with 25 ft (7.6 m) of lineset length. See Vapor Line Sizing and Cooling Capacity Loss table when using other sizes and lengths of lineset.
‡.See Liquid Line Sizing For Cooling Only Systems with R-454B Refrigerant tables.
Note: See unit Installation Instruction for proper installation.

ELECTRICAL DATA

UNIT SIZE	V-PH	OPER VOLTS*		COMPR		FAN	MCA	MAX FUSE† or CKT BRK AMPS	SCCR
		MAX	MIN	MRC	RLA	FLA			
24	208-230-1	253	197	15	11.0	0.88	15.9	25	5kA rms
36				15	11.5	0.88	18.1	25	5kA rms
48				30	16.7	0.88	25.1	30	5kA rms
60				30	20.1	0.88	33.1	40	5kA rms

*. Permissible limits of the voltage range at which the unit will operate satisfactorily
†. Time-Delay fuse.
FLA - Full Load Amps, **MCA**-Minimum Circuit Amps, **MRC** - Maximum Rated Current, **RLA**-Rated Load Amps
SCCR - Short-Circuit Current Rating
NOTE: Control circuit is 24-V on all units and requires external power source. Copper wire must be used from service disconnect to unit.
All motors/compressors contain internal overload protection.

⚠ NOTICE

If national or local codes require a GFCI protective device, the use of an HF type GFCI device is **required**.
A GFCI device not meeting HF requirements may result in excessive nuisance tripping and equipment shutdown.

REFRIGERANT PIPING LENGTH LIMITATIONS

Maximum Line Lengths:

The maximum allowable equivalent length for Heat Pumps varies depending on the vertical separation. See the tables below for allowable lengths depending on whether the outdoor unit is on the same level, above or below the outdoor unit.

Maximum Line Lengths for Heat Pump Applications

	MAXIMUM ACTUAL LENGTH* ft (m)	MAXIMUM EQUIVALENT LENGTH† ft (m)	MAXIMUM VERTICAL SEPARATION ft (m)
Units on equal level	200 (61.0)	250 (76.2)	N/A
Outdoor unit ABOVE indoor unit	200 (61.0)	250 (76.2)	200 (61.0)
Outdoor unit BELOW indoor unit	200 (61.0)	250 (76.2)	80 (24.4)

*. Maximum actual length not to exceed 200 ft (61 m)
†. Equivalent length accounts for losses due to elbows or fitting. See the Long Line Guideline for details.

LONG LINE APPLICATIONS

An application is considered Long Line when the refrigerant level in the system requires the use of accessories to maintain acceptable refrigerant management for systems reliability. **Q**5H9V Heat Pumps do not require any additional accessories for Long Line applications. Defining a system as long line depends on the liquid line diameter, actual length of the tubing, and vertical separation between the indoor and outdoor units.

For heat pump systems, the chart below shows when an application is considered Long Line.

Refrigerant Long Line Description ft (m)

Liquid Line Size	Units On Same Level ft (m)	Outdoor Above Indoor ft (m)	Outdoor Below Indoor ft (m)
3/8	80 (24.4)	80 (24.4)	20 (6.1) vertical or 80 (24.4) total

NOTE: See Long Line Guideline for details

COOLING CAPACITY LOSS TABLE

Nominal Size (Btuh)	Line OD (in)	Cooling Capacity Loss (%) Equivalent Length (ft)										
		25	50	75	80	100	125	150	175	200	225	250
24000	5/8	0.7	2.1	3.5	3.8	4.8	6.1	7.3	8.4	9.5	10.6	11.7
	3/4	0.0	0.7	1.4	1.6	2.2	2.8	3.5	4.1	4.7	5.3	5.9
36000	5/8	1.8	4.1	6.3	6.8	8.4	10.4	12.2	13.9	15.5	17.0	18.5
	3/4	0.4	1.4	2.4	2.6	3.5	4.5	5.5	6.4	7.3	8.2	9.0
	7/8	0.0	0.6	1.2	1.3	1.9	2.5	3.1	3.8	4.4	5.0	5.5
48000	3/4	1.2	2.6	3.9	4.2	5.3	6.8	8.2	9.5	10.8	12.0	13.2
	7/8	0.5	1.2	1.9	2.0	2.6	3.5	4.4	5.2	6.1	6.9	7.7
	1 1/8	0.0	0.2	0.4	0.4	–	–	–	–	–	–	–
60000	3/4	1.7	3.9	5.8	6.2	7.7	9.5	11.1	12.7	14.2	15.6	17.0
	7/8	0.7	1.9	3.1	3.3	4.2	5.3	6.4	7.4	8.3	9.3	10.2
	1 1/8	0.0	0.5	1.0	1.1	1.5	2.0	2.5	2.9	3.4	3.8	4.3

Rated size Line OD and Rated Total Equivalent Length are in **BOLD**.

– = Applications in this range are disallowed

ACCESSORIES

KIT NUMBER	KIT NAME	24	36	48	60
NASA001TD	TIME DELAY KIT	X	X	X	X
NASA00106SS	SNOW STAND	X	X	X	X
NASA00201SF	SUPPORT FEET	X	X	X	X
NASA00101PC	EMI CHOKE KIT	X	X	X	X
NASA00201PC	EMI CHOKE KIT	X	X	X	X

X = Accessory

ACCESSORY USAGE GUIDELINE

ACCESSORY	REQUIRED FOR LOW-AMBIENT COOLING APPLICATIONS (Below 55°F/12.8°C)	REQUIRED FOR LONG LINE APPLICATIONS	REQUIRED FOR SEA COAST APPLICATIONS (Within 2 miles/3.22 km)
Compressor Stator Heat	Standard	No	No
Evaporator Freeze Protection	Standard	No	No
Low-Ambient Control	Standard	No	No
Support Feet	Recommended	No	Recommended
Winter Start Control	Standard	No	No

Accessory Description and Usage

EMI Choke

In some applications, electromagnetic interference may disrupt the power line communications (PLC) between the outdoor unit and the indoor unit or thermostat. In those cases, the EMI Choke Kit is designed to filter out the interference and allow PLC communication to resume unimpeded.

Usage Guideline:

Suggested in the following applications:

– Any application where "Lost PLC Communication" faults are a regular occurrence.

Snow Stand

Coated wire rack which supports unit 18 in. (457.2 mm) above mounting pad to allow for drainage from unit base.

Usage Guideline:

Suggested in the following applications:

– Unit installations in heavy snowfall areas.
– Unit installations in snow drift locations.
– Unit installations in areas of prolonged subfreezing temperatures.
– All commercial installations.

Support Feet

Four or five stick-on plastic feet that raise the unit 4 in. (101.6 mm) above the mounting pad. This allows sand, dirt, and other debris to be flushed from the unit base, minimizing corrosion.

Usage Guideline:

Suggested in the following applications:

Coastal installations.

Windy areas or where debris is normally circulating.

Rooftop installations.

For improved sound ratings.

SOUND POWER LEVEL

Unit Size	Typical Octave Band Spectrum (dB, without tone adjustment)	Min Cooling	Nominal* Cooling	Min Heating	Nominal* Heating
24	Speed	1260	3480	1320	3480
	125	58.0	65.3	57.4	64.7
	250	56.1	70.1	57.3	68.8
	500	60.5	64.2	56.5	63.2
	1000	44.5	58.7	48.2	57.8
	2000	47.8	56.1	48.8	56.1
	4000	44.3	58.4	45.9	59.3
	8000	48.2	50.7	49.7	51.3
	Sound Rating (dBA)	58	67	57	67
36	Speed	1320	4980	1260	4980
	125	56.4	66.2	57.7	68.4
	250	54.7	63.1	54.3	61.9
	500	53.5	69.6	54.7	68.7
	1000	49.8	65.3	50.8	59.5
	2000	56.7	58.8	53.9	57.2
	4000	41.6	63.0	47.9	63.2
	8000	46.4	52.8	49.7	52.5
	Sound Rating (dBA)	59	71	59	69
48	Speed	1500	3840	1380	3840
	125	57.7	67.4	59.4	62.7
	250	61.9	67.7	58.7	68.0
	500	61.9	67.3	59.7	64.8
	1000	59.8	66.7	60.6	64.9
	2000	54.9	59.9	55.2	62.8
	4000	48.1	62.6	50.5	62.8
	8000	54.2	57.2	51.7	57.6
	Sound Rating (dBA)	64	71	64	70
60	Speed	1500	4440	1500	4440
	125	57.2	67.1	59.4	63.3
	250	64.4	72.6	61.2	69.2
	500	51.0	69.1	58.1	62.5
	1000	53.6	67.5	57.8	62.0
	2000	55.3	62.2	54.8	63.3
	4000	43.5	63.1	49.3	63.6
	8000	51.7	58.4	52.2	57.5
	Sound Rating (dBA)	61	73	62	70

*. Nominal condition data taken from maximum speed operation at 95°F in cooling and 47°F in heating
NOTE: Tested in compliance with AHRI 270-2015 but not listed with AHRI.

CHARGING SUBCOOLING

UNIT SIZE	NOMINAL SUBCOOLING*	REQUIRED SUBCOOLING _F (_C)
24	8	Subcooling recommendation displayed on 5x7 LED screen on PCM when in Cooling Check Charge mode must be followed
36	9	
48	9	
60	13	

*. Nominal subcooling targets for use as reference or in specific applications with 25 ft. (7.6 m) lineset, 95°F outdoor ambient, and 80°F/67°F indoor DB/WB.

DIMENSIONS

UNIT	SERIES	ELECTRICAL CHARACTERISTICS				A		B		C		D		E		F		G		H		I		J		K		OPERATING WEIGHT		SHIPPING WEIGHT		SHIPPING LENGTH / WIDTH (Sq.)		SHIPPING HEIGHT	
						INCH	MM	INCH	MM	INCH	MM	INCH	MM	INCH	MM	INCH	MM	INCH	MM	INCH	MM	INCH	MM	INCH	MM	INCH	MM	Lbs	Kgs	Lbs	Kgs	INCH	MM	INCH	MM
Q5H9V24**AAA	A	Y	N	N	N	35	889.0	37	939.9	3/4	19.1	6 9/16	166.1	28 7/16	722.3	9 1/8	231.3	1 1/8	28.2	3 13/16	97.4	16 3/4	425.5	17	431.8	18 1/4	463.6	234	106.1	262	118.8	38	965.0	40 13/16	1036.6
Q5H9V36**AAA	A	Y	N	N	N	35	889.0	40 3/8	1026.3	7/8	22.2	6 9/16	166.1	28 7/16	722.3	9 1/8	231.3	1 1/8	28.2	3 13/16	97.4	16 1/2	419.1	16 1/4	412.8	19 1/4	489.0	252	114.3	280	127.0	38	965.0	44 3/16	1123.0
Q5H9V48**AAA	A	Y	N	N	N	35	889.0	47 3/16	1199.0	7/8	22.2	6 9/16	166.1	28 7/16	722.3	9 1/8	231.3	1 1/8	28.2	3 13/16	97.4	16 1/2	419.1	16	406.4	20	508.0	319	144.7	348	157.9	38	965.0	51	1295.7
Q5H9V60**AAA	A	Y	N	N	N	35	889.0	47 3/16	1199.0	7/8	22.2	6 9/16	166.1	28 7/16	722.3	9 1/8	231.3	1 1/8	28.2	3 13/16	97.4	16 1/2	419.1	16	406.4	20	508.0	319	144.7	348	157.9	38	965.0	51	1295.7
		208-230-1-60	208/230-3-60	460-3-60	575-3-60	Y=YES N=NO																													

NOTES:

1. CENTER OF GRAVITY .

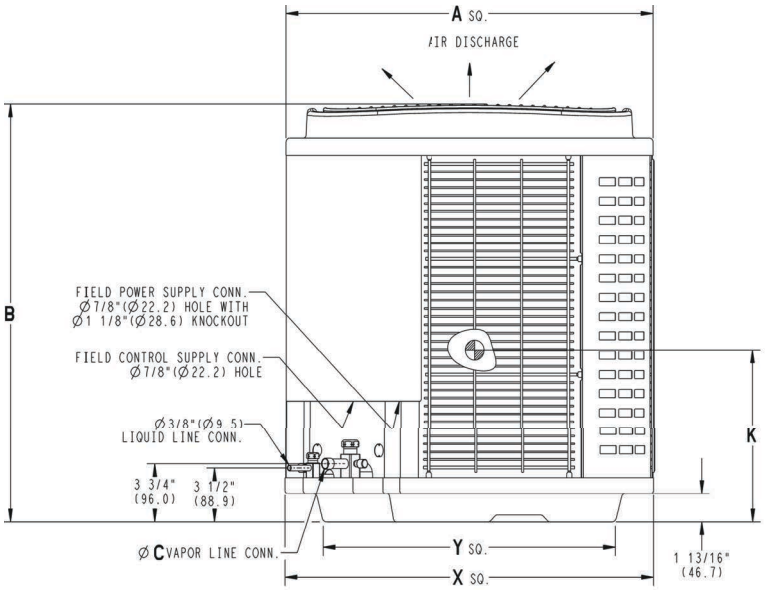

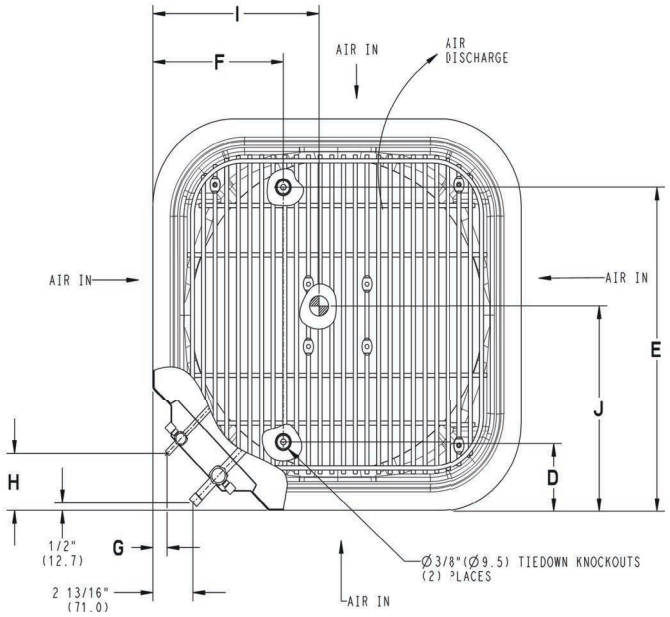

UNIT SIZE	"X" MINIMUM GROUND MOUNTING PAD APPLICATION DIMENSIONS		"Y" MINIMUM ROOF-TOP MOUNTING PAD APPLICATION DIMENSIONS	
-	23 1/8	587.3	17 7/8	454.6
-	25 3/4	654.0	20 7/16	518.5
-	31 3/16	792.5	22 15/16	583.2
24,36,48,60	35	889.0	26 3/4	679.7

NOTE: ALL DIMENSIONS IN INCH (MM)

U.S. ECCN: Not Subject to Regulation (N.S.R.)

SD6114-4 Q5H9V REV. -

Manufacturer reserves the right to change, at any time, specifications and designs without notice and without obligations.

CLEARANCES

Clearances (various examples)

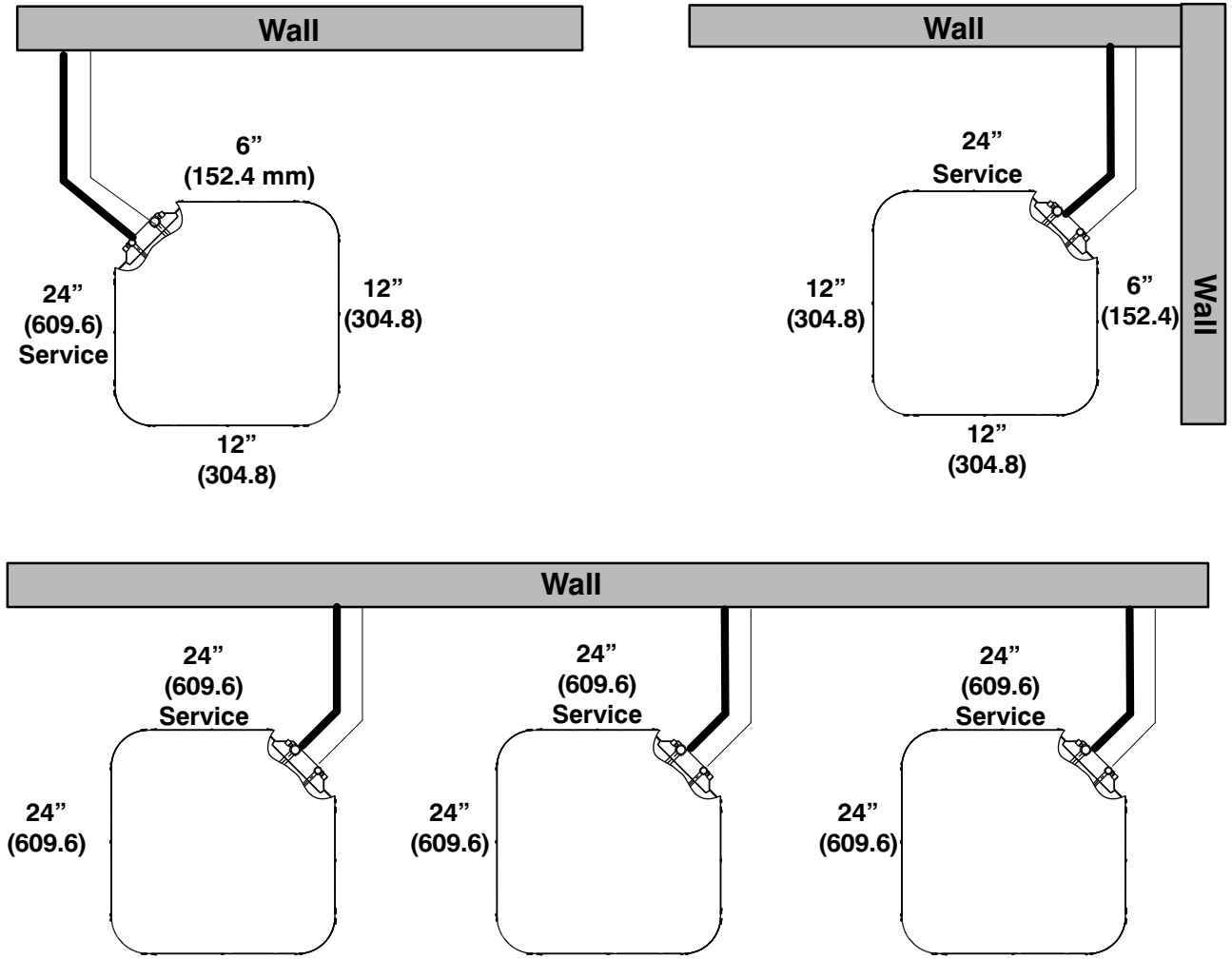

Note: Numbers in ( ) = mm

IMPORTANT: When installing multiple units in an alcove, roof well, or partially enclosed area, ensure there is adequate ventilation to prevent re-circulation of discharge air.

A07833

Manufacturer reserves the right to change, at any time, specifications and designs without notice and without obligations.

BALANCE POINT WORKSHEET

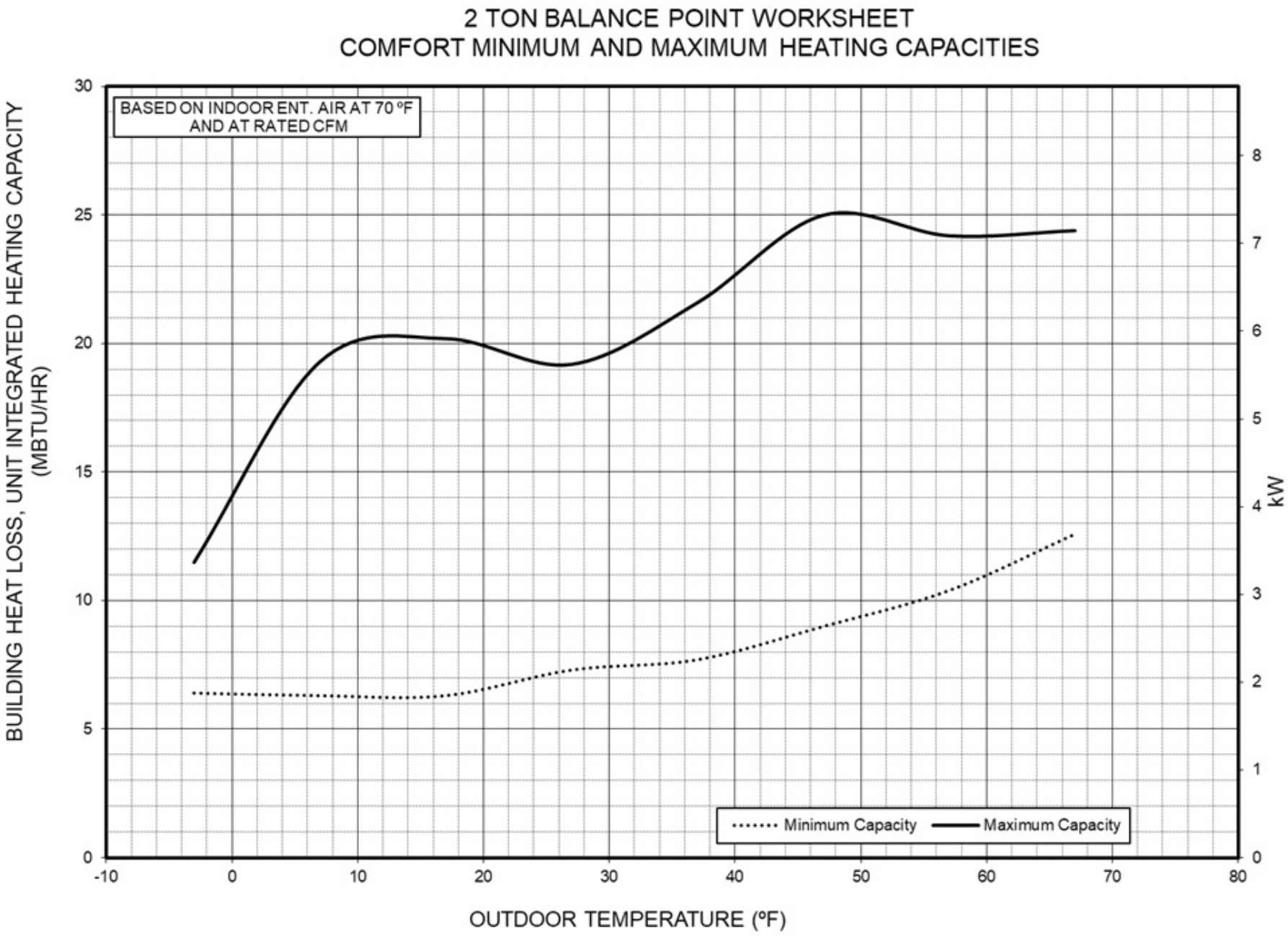

3 TON BALANCE POINT WORKSHEET
COMFORT MINIMUM AND MAXIMUM HEATING CAPACITIES

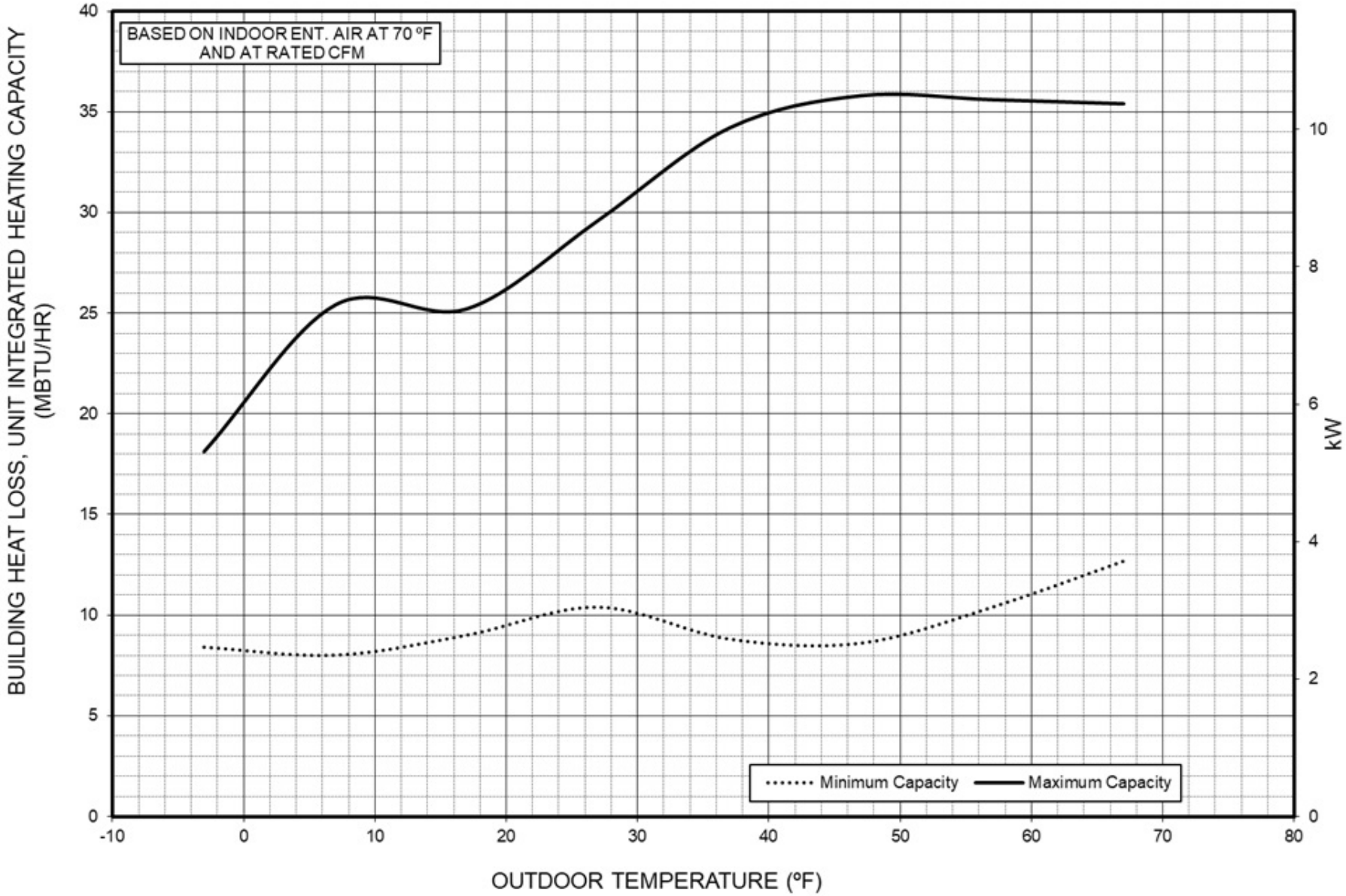

BALANCE POINT WORKSHEET - Continued

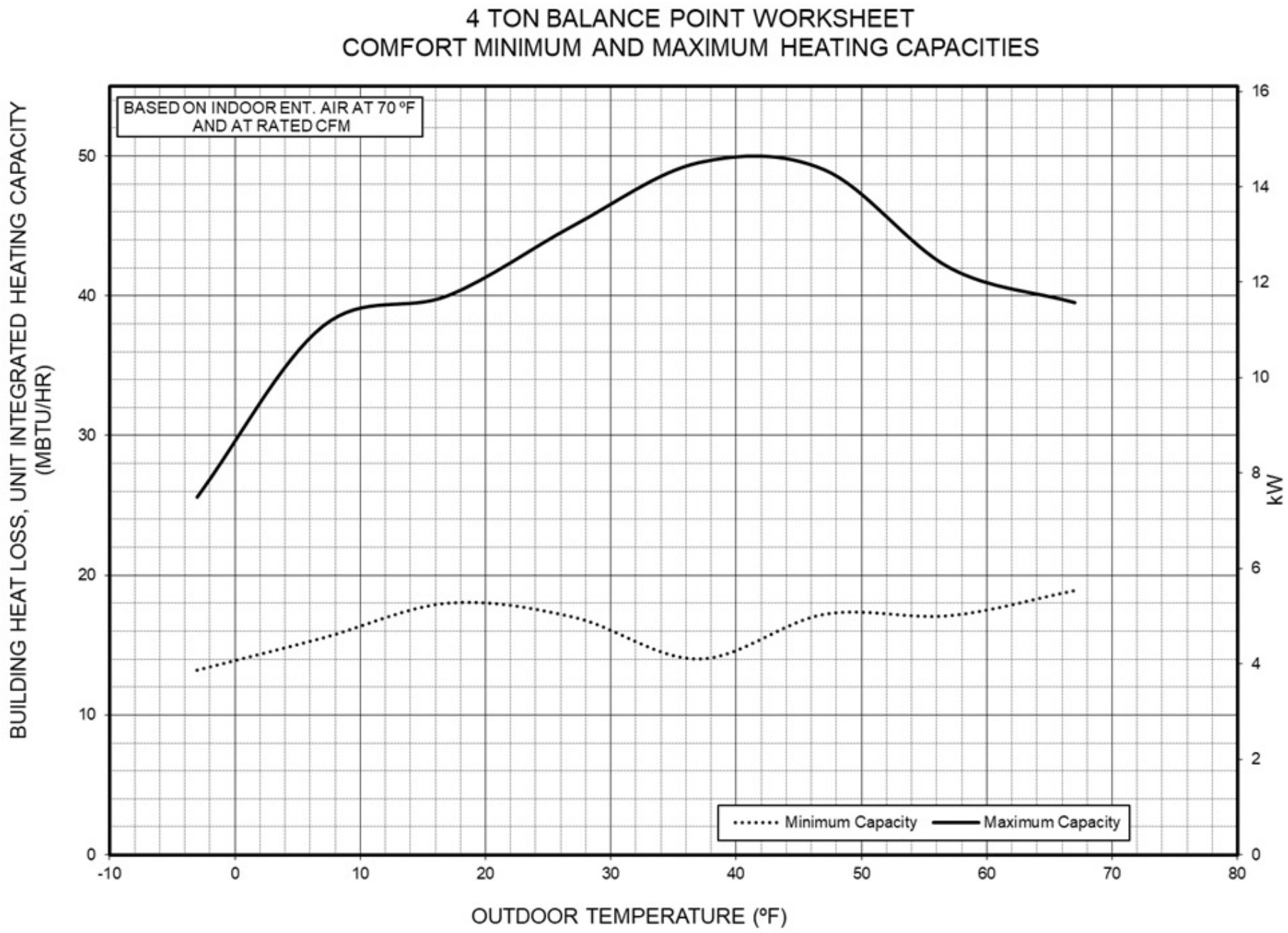

BALANCE POINT WORKSHEET - Continued

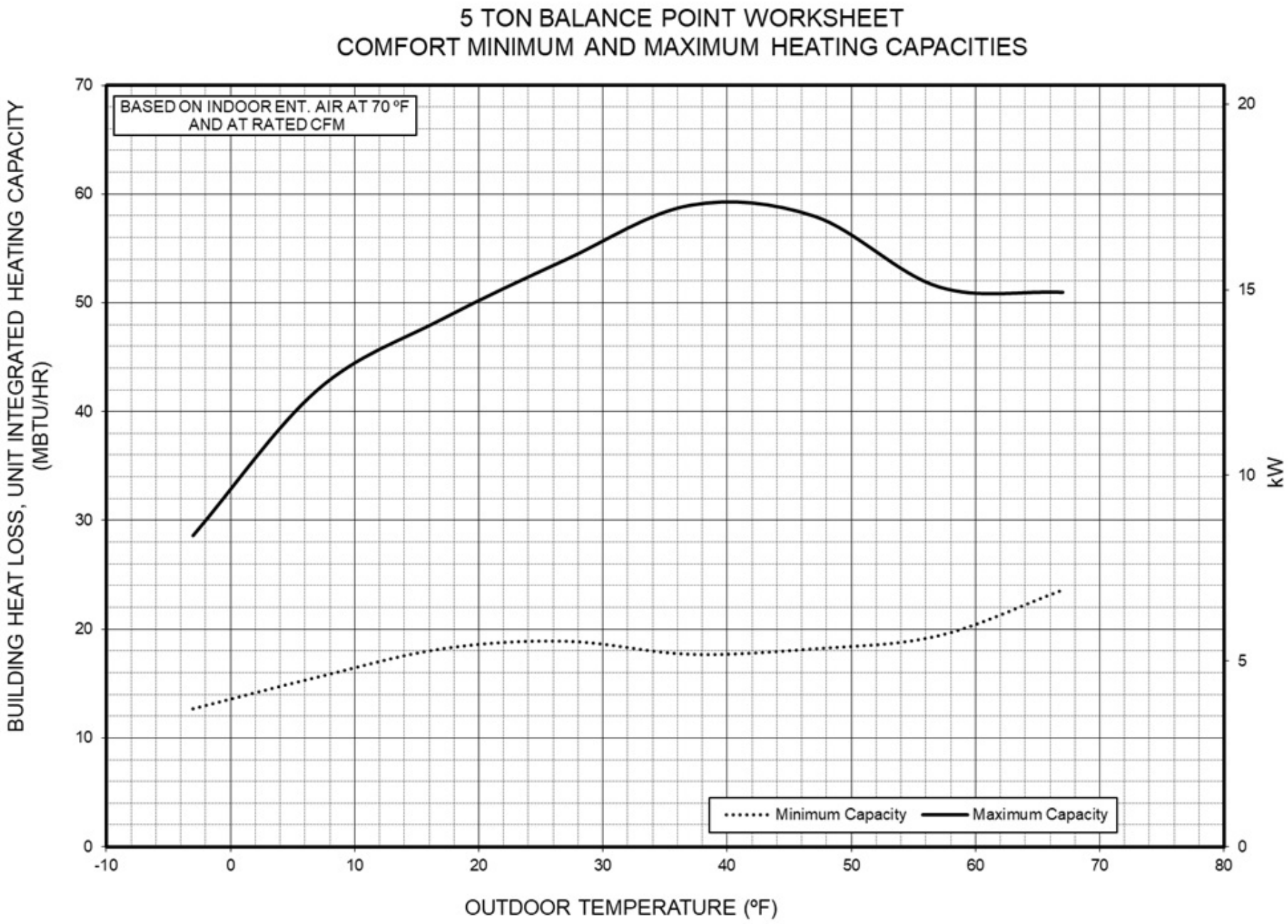

Detailed Cooling Capacities# - Comfort + Dehumidify Mode

EVAPORATOR AIR °F (°C)		CONDENSER ENTERING AIR TEMPERATURES °F (°C)																											
		65.0 (18.3)				75.0 (23.9)				85.0 (29.4)				95.0 (35.0)				105.0 (40.6)				115.0 (46.1)				125.0 (51.7)			
EDB	EWB	ID SCFM	Capacity MBtuh†		Total Sys. KW**	ID SCFM	Capacity MBtuh†		Total Sys. KW**	ID SCFM	Capacity MBtuh†		Total Sys. KW**	ID SCFM	Capacity MBtuh†		Total Sys. KW**	ID SCFM	Capacity MBtuh†		Total Sys. KW**	ID SCFM	Capacity MBtuh†		Total Sys. KW**	ID SCFM	Capacity MBtuh†		Total Sys. KW**
			Total	Sens‡			Total	Sens‡			Total	Sens‡			Total	Sens‡			Total	Sens‡			Total	Sens‡			Total	Sens‡	
Q5H9V24 Maximum Demand																													
75 (23.9)	72.0 (22.2)	805	27.6	11	1.01	805	27.4	11	1.31	805	27.8	10.9	1.56	805	27	10.4	1.69	805	26	9.9	2	805	25	9.7	2.31	805	23.4	9.7	2.63
	67.0 (19.4)		25	14.9	1.04		24.8	14.9	1.33		25	14.8	1.56		24.2	14.1	1.69		23.4	13.7	2		22.4	13.6	2.3		21	13.9	2.61
	63.0 (17.2)		23	18	1.06		22.8	17.9	1.33		23	17.8	1.56		22.2	17.1	1.69		21.4	16.7	1.99		20.6	16.6	2.29		19.4	17.1	2.6
	57.0 (13.9)		21.4	21.4	1.08		21.2	21.2	1.34		21.2	21	1.56		20.8	19.9	1.7		20.2	19	2		19.6	18.6	2.28		18.7	18.7	2.59
80 (26.7)	72.0 (22.2)	805	27.4	14.9	1.01	805	27.2	14.9	1.3	805	27.6	14.8	1.56	805	26.8	14.2	1.68	805	26	13.8	2	805	24.8	13.7	2.3	805	23.4	13.9	2.64
	67.0 (19.4)		24.8	18.7	1.04		24.6	18.8	1.32		25	18.6	1.57		24.2	17.9	1.7		23.4	17.5	2.01		22.4	17.5	2.3		21	18	2.61
	63.0 (17.2)		23.2	21.6	1.06		23	21.6	1.33		23.2	21.4	1.57		22.4	20.8	1.69		21.8	20.2	2		21.2	19.4	2.28		20	20	2.6
	57.0 (13.9)		22.8	22.6	1.07		22.4	22.4	1.33		22.8	22.4	1.57		22.2	21.2	1.69		21.6	20.4	2		21	20	2.29		20	20	2.6
Q5H9V24 Median Demand																													
75 (23.9)	72.0 (22.2)	644	22.6	9.1	0.65	644	21.4	8.8	0.82	644	21.2	8.5	1.01	644	20.8	8.2	1.14	644	20.4	7.9	1.37	644	19.9	7.8	1.68	644	19.7	8.2	2.09
	67.0 (19.4)		20.4	12.3	0.69		19.4	11.9	0.85		19.1	11.6	1.02		18.8	11.3	1.16		18.3	11	1.38		17.8	11	1.68		17.7	11.7	2.08
	63.0 (17.2)		18.8	14.7	0.71		17.8	14.4	0.86		17.6	14.1	1.04		17.2	13.7	1.16		16.8	13.4	1.38		16.4	13.5	1.68		16.3	14.3	2.07
	57.0 (13.9)		17.4	17.3	0.74		16.6	16.6	0.88		16.4	16.2	1.04		16.2	15.5	1.17		15.9	15	1.38		15.6	14.9	1.67		15.6	15.6	2.06
80 (26.7)	72.0 (22.2)	644	22.4	12.3	0.65	644	21.4	12	0.82	644	21.2	11.7	1.01	644	20.8	11.3	1.14	644	20.4	11.1	1.38	644	19.8	11.1	1.68	644	19.7	11.7	2.1
	67.0 (19.4)		20.4	15.4	0.69		19.3	15.1	0.85		19	14.8	1.02		18.7	14.4	1.16		18.3	14.1	1.38		17.8	14.2	1.68		17.7	15.1	2.08
	63.0 (17.2)		18.9	17.8	0.71		18	17.4	0.86		17.7	17	1.03		17.5	16.5	1.17		17.3	15.7	1.38		17	15.5	1.68		16.8	16.8	2.08
	57.0 (13.9)		18.5	18.5	0.72		17.7	17.7	0.87		17.5	17.3	1.03		17.3	16.6	1.16		17.1	16.1	1.38		16.8	16	1.68		16.8	16.8	2.08
Q5H9V24 Minimum Demand																													
75 (23.9)	72.0 (22.2)	644	20.2	8.2	0.54	644	18.8	7.8	0.67	644	17.8	7.3	0.79	644	17.9	7.2	0.95	644	17.5	7	1.14	644	17.5	7	1.45	644	18.2	7.7	1.92
	67.0 (19.4)		18.2	11.4	0.57		16.9	11	0.7		16	10.4	0.81		16	10.3	0.96		15.7	10.1	1.15		15.6	10.2	1.44		16.4	11.1	1.92
	63.0 (17.2)		16.8	13.8	0.6		15.6	13.4	0.72		14.7	12.8	0.82		14.8	12.6	0.97		14.5	12.4	1.16		14.4	12.7	1.45		15.1	13.7	1.91
	57.0 (13.9)		15.8	15.8	0.62		14.9	14.9	0.73		14.2	14	0.83		14.3	13.7	0.97		14	13.2	1.15		14.1	13.4	1.45		14.6	14.6	1.9
80 (26.7)	72.0 (22.2)	644	20	11.4	0.53	644	18.7	11	0.67	644	17.7	10.5	0.79	644	17.8	10.3	0.95	644	17.4	10.1	1.14	644	17.4	10.3	1.45	644	18.1	11.2	1.91
	67.0 (19.4)		18.1	14.5	0.57		16.9	14.1	0.7		16	13.5	0.81		16	13.3	0.96		15.7	13.1	1.15		15.7	13.4	1.45		16.4	14.5	1.92
	63.0 (17.2)		17	16.7	0.59		16.1	15.7	0.71		15.3	15	0.82		15.3	14.7	0.96		15.1	14.2	1.15		15.1	14.4	1.45		15.7	15.7	1.91
	57.0 (13.9)		16.9	16.8	0.6		15.9	15.9	0.71		15.2	15	0.81		15.3	14.7	0.96		15.1	14.2	1.15		15.1	14.4	1.45		15.7	15.7	1.91

Manufacturer reserves the right to change, at any time, specifications and designs without notice and without obligations.

Detailed Cooling Capacities# - Comfort + Dehumidify Mode (Continued)

EVAPORATOR AIR °F (°C)		CONDENSER ENTERING AIR TEMPERATURES °F (°C)																											
		65.0 (18.3)				75.0 (23.9)				85.0 (29.4)				95.0 (35.0)				105.0 (40.6)				115.0 (46.1)				125.0 (51.7)			
EDB	EWB	ID SCFM	Capacity MBtuh†		Total Sys. KW**	ID SCFM	Capacity MBtuh†		Total Sys. KW**	ID SCFM	Capacity MBtuh†		Total Sys. KW**	ID SCFM	Capacity MBtuh†		Total Sys. KW**	ID SCFM	Capacity MBtuh†		Total Sys. KW**	ID SCFM	Capacity MBtuh†		Total Sys. KW**	ID SCFM	Capacity MBtuh†		Total Sys. KW**
			Total	Sens‡			Total	Sens‡			Total	Sens‡			Total	Sens‡			Total	Sens‡			Total	Sens‡			Total	Sens‡	
Q5H9V36 Maximum Demand																													
75 (23.9)	72.0 (22.2)	1225	30.2	12.8	1.37	1225	36.2	14.8	2.23	1225	40	16.2	2.56	1225	39	15.6	2.79	1225	37	14.9	3.08	1225	35	14.2	3.51	1225	30	12.1	3.75
	67.0 (19.4)		27.4	18.5	1.38		32.8	20.6	2.2		36.4	22	2.56		35	21.4	2.76		33.4	20.8	3.06		32	20	3.48		27.2	18	3.72
	63.0 (17.2)		25.4	23	1.38		30.4	25.2	2.18		33.6	26.6	2.55		32.4	26.2	2.76		30.8	25.4	3.04		29.6	24.6	3.45		25.2	22.6	3.67
	57.0 (13.9)		24.6	24.6	1.39		28.8	28.8	2.17		31.2	31.2	2.53		30.4	30.4	2.74		29.2	29.2	3.02		28.2	27.8	3.42		24.8	24	3.68
80 (26.7)	72.0 (22.2)	1225	30	18.4	1.36	1225	36	20.6	2.23	1225	40	22	2.56	1225	38.5	21.6	2.76	1225	37	20.8	3.09	1225	35.2	20	3.5	1225	30	18	3.77
	67.0 (19.4)		27.4	24	1.38		32.8	26.4	2.2		36.2	27.8	2.55		34.8	27.6	2.81		33.4	26.6	3.06		32	26	3.48		27.2	23.8	3.72
	63.0 (17.2)		26.2	26.2	1.38		30.8	30.6	2.18		33.8	32.2	2.54		32.8	31.6	2.76		31.4	30.8	3.05		30.2	29.8	3.45		26.6	25.6	3.72
	57.0 (13.9)		26.2	26.2	1.38		30.6	30.6	2.19		33.2	33.2	2.54		32.4	32.4	2.76		31.2	31.2	3.05		30.2	29.8	3.46		26.6	25.6	3.72
Q5H9V36 Median Demand																													
75 (23.9)	72.0 (22.2)	950	28.2	11.9	1.07	950	29.8	12.4	1.46	950	30.8	12.7	1.61	950	27.8	11.5	1.63	950	26.4	11	1.84	950	25.2	10.4	2.14	950	22.4	9.4	2.53
	67.0 (19.4)		25.6	16.5	1.09		27	17.1	1.46		27.8	17.4	1.62		25	16.3	1.62		23.8	15.7	1.84		22.6	15.2	2.12		20.2	14.1	2.51
	63.0 (17.2)		23.8	20.2	1.1		25	20.8	1.46		25.8	21	1.63		23.2	19.9	1.63		22	19.4	1.83		21	18.8	2.12		18.9	17.6	2.51
	57.0 (13.9)		22.6	22.6	1.11		23.6	23.6	1.46		24.2	24.2	1.63		22.2	22.2	1.63		21.4	21.2	1.84		20.4	20.2	2.11		18.7	18.1	2.51
80 (26.7)	72.0 (22.2)	950	28	16.5	1.06	950	29.6	17.1	1.46	950	30.6	17.4	1.6	950	27.6	16.3	1.62	950	26.4	15.8	1.85	950	25	15.2	2.14	950	22.4	14.2	2.55
	67.0 (19.4)		25.6	21	1.09		27	21.6	1.46		27.8	22	1.62		25	21	1.62		23.8	20.4	1.83		22.8	19.8	2.14		20.4	18.6	2.52
	63.0 (17.2)		24.2	24.2	1.1		25.4	25	1.46		26	25.4	1.62		23.8	23.8	1.63		22.8	22.8	1.83		22	21.6	2.13		20.2	19.5	2.54
	57.0 (13.9)		24	24	1.1		25.2	25.2	1.47		25.8	25.8	1.62		23.8	23.8	1.63		22.8	22.8	1.84		22	21.6	2.13		20.2	19.5	2.54
Q5H9V36 Minimum Demand																													
75 (23.9)	72.0 (22.2)	950	27.4	11.6	1.01	950	26.4	11.2	1.19	950	25.4	10.8	1.34	950	22	9.5	1.22	950	20.8	9.1	1.39	950	19.7	8.6	1.63	950	18.4	8.1	2.09
	67.0 (19.4)		24.8	16.2	1.03		24	15.8	1.2		23	15.5	1.34		19.8	14.2	1.23		18.7	13.8	1.39		17.7	13.3	1.63		16.6	12.8	2.09
	63.0 (17.2)		23	19.8	1.04		22.2	19.5	1.21		21.4	19.1	1.35		18.5	17.7	1.24		17.5	17.1	1.39		16.6	16.4	1.62		15.9	14.5	2.08
	57.0 (13.9)		22	22	1.06		21.4	21.4	1.22		20.8	20.8	1.35		18.3	18.3	1.24		17.4	17.4	1.39		16.6	16.4	1.63		15.8	15.3	2.08
80 (26.7)	72.0 (22.2)	950	27.2	16.2	1.01	950	26.4	15.8	1.19	950	25.4	15.5	1.35	950	22	14.3	1.23	950	20.6	13.8	1.38	950	19.5	13.4	1.62	950	18.3	12.8	2.09
	67.0 (19.4)		24.8	20.6	1.03		24	20.4	1.2		23	20.2	1.34		20	18.7	1.23		18.9	18.2	1.39		18	17.5	1.63		17.1	16.2	2.09
	63.0 (17.2)		23.4	23.4	1.04		23	22.6	1.21		22.2	22.2	1.35		19.6	19.6	1.23		18.7	18.7	1.39		17.9	17.7	1.63		17	16.4	2.08
	57.0 (13.9)		23.4	23.4	1.04		22.8	22.8	1.21		22.2	22.2	1.35		19.6	19.6	1.23		18.7	18.7	1.39		17.9	17.6	1.63		17	16.4	2.08

Detailed Cooling Capacities# - Comfort + Dehumidify Mode (Continued)

EVAPORATOR AIR °F (°C)		CONDENSER ENTERING AIR TEMPERATURES °F (°C)																											
		65.0 (18.3)				75.0 (23.9)				85.0 (29.4)				95.0 (35.0)				105.0 (40.6)				115.0 (46.1)				125.0 (51.7)			
EDB	EWB	ID SCFM	Capacity MBtuh†		Total Sys. KW**	ID SCFM	Capacity MBtuh†		Total Sys. KW**	ID SCFM	Capacity MBtuh†		Total Sys. KW**	ID SCFM	Capacity MBtuh†		Total Sys. KW**	ID SCFM	Capacity MBtuh†		Total Sys. KW**	ID SCFM	Capacity MBtuh†		Total Sys. KW**	ID SCFM	Capacity MBtuh†		Total Sys. KW**
			Total	Sens‡			Total	Sens‡			Total	Sens‡			Total	Sens‡			Total	Sens‡			Total	Sens‡			Total	Sens‡	
Q5H9V48 Maximum Demand																													
75 (23.9)	72.0 (22.2)	1400	47.5	19.3	2.49	1400	50.5	20.2	2.52	1400	55	22	3.36	1400	52.5	21.2	3.82	1400	50	20.6	4.4	1400	49	20.2	5.16	1400	42	17.7	5.17
	67.0 (19.4)		43	26.2	2.44		46	27.2	2.54		49.5	28.8	3.33		47.5	28	3.8		45	27.6	4.34		44	27.4	5.12		37.6	25.2	5.07
	63.0 (17.2)		39.5	31.6	2.39		42	32.6	2.51		46	34.2	3.34		43.5	33.4	3.74		41.5	33	4.29		40.5	33	5.05		34.6	31.2	5
	57.0 (13.9)		36.8	36.8	2.38		38.5	38.5	2.5		42	41	3.32		40	39	3.7		38.5	38.5	4.27		37.4	37.4	4.96		33.2	33.2	4.97
80 (26.7)	72.0 (22.2)	1400	47	26.2	2.47	1400	50.5	27.2	2.53	1400	55	28.8	3.37	1400	52.5	28.2	3.83	1400	50	27.6	4.41	1400	48.5	27.4	5.17	1400	41.5	25.4	5.12
	67.0 (19.4)		43	33	2.45		45.5	34	2.52		49.5	35.6	3.34		47	34.8	3.73		45	34.6	4.34		43.5	34.6	5.07		37.6	32.8	5.07
	63.0 (17.2)		40	38	2.41		42.5	39.5	2.52		46	41	3.33		44	40.5	3.77		42	40	4.32		40.5	40	5.01		35.8	35.8	5.04
	57.0 (13.9)		39	39	2.39		41	41	2.51		44	44	3.31		42.5	42.5	3.75		41	41	4.32		40	40	5.03		35.6	35.6	5.01
Q5H9V48 Median Demand																													
75 (23.9)	72.0 (22.2)	1120	36.6	15.2	1.43	1120	37.6	15.3	1.48	1120	38	15.6	1.86	1120	38.5	15.8	2.39	1120	37.8	15.8	2.93	1120	37.8	15.9	3.65	1120	36.4	15.5	4.22
	67.0 (19.4)		33	20.8	1.43		33.8	21	1.5		34.4	21.2	1.89		34.6	21.4	2.38		34	21.4	2.91		34	21.8	3.6		32.8	21.8	4.17
	63.0 (17.2)		30.6	25.2	1.44		31.2	25.4	1.52		31.8	25.6	1.91		31.8	25.8	2.37		31.4	26	2.9		31.4	26.4	3.58		30.2	26.6	4.13
	57.0 (13.9)		28.6	28.6	1.44		29.2	29.2	1.54		29.6	29.6	1.92		29.6	29.6	2.37		29.2	29.2	2.88		29.4	29.4	3.55		28.8	28.8	4.11
80 (26.7)	72.0 (22.2)	1120	36.4	20.8	1.42	1120	37.4	21	1.48	1120	38	21.2	1.86	1120	38	21.4	2.36	1120	37.6	21.6	2.93	1120	37.6	22	3.64	1120	36.4	21.8	4.24
	67.0 (19.4)		33	26.4	1.43		33.8	26.6	1.51		34.4	26.8	1.89		34.4	27	2.37		34	27.2	2.92		34	27.8	3.61		32.8	27.8	4.18
	63.0 (17.2)		30.8	30.4	1.43		31.6	30.6	1.53		32	31	1.9		32.2	31.2	2.38		31.6	31.4	2.9		31.6	31.6	3.57		30.8	30.8	4.15
	57.0 (13.9)		30.4	30.4	1.43		31	31	1.52		31.6	31.6	1.91		31.6	31.6	2.38		31.2	31.2	2.9		31.4	31.4	3.58		30.8	30.8	4.15
Q5H9V48 Minimum Demand																													
75 (23.9)	72.0 (22.2)	1120	31.4	13.3	1.1	1120	30.6	12.9	1.12	1120	29.2	12.3	1.35	1120	31.6	13.3	1.85	1120	31.4	13.4	2.34	1120	32.8	14.1	3.08	1120	34.4	14.8	3.95
	67.0 (19.4)		28.4	18.9	1.12		27.6	18.5	1.15		26.2	17.9	1.36		28.4	18.9	1.86		28.2	19.1	2.33		29.6	20	3.06		31	21	3.91
	63.0 (17.2)		26.4	23.2	1.14		25.6	22.8	1.18		24.2	22.2	1.37		26.2	23.2	1.87		26	23.6	2.33		27.2	24.6	3.03		28.6	25.8	3.89
	57.0 (13.9)		25.2	25.2	1.14		24.6	24.6	1.18		23.6	23.6	1.38		25.2	25.2	1.88		25	25	2.33		26.2	26.2	3.03		27.4	27.4	3.86
80 (26.7)	72.0 (22.2)	1120	31.4	19	1.1	1120	30.6	18.6	1.13	1120	29	18	1.34	1120	31.4	19	1.85	1120	31.2	19.2	2.33	1120	32.8	20.2	3.09	1120	34.2	21	3.95
	67.0 (19.4)		28.4	24.4	1.12		27.6	24	1.15		26.2	23.4	1.36		28.4	24.4	1.86		28.2	24.8	2.33		29.6	25.8	3.06		31	27	3.92
	63.0 (17.2)		27.2	26.8	1.12		26.8	25	1.16		25.4	25.4	1.37		27.2	26.8	1.87		27.2	26.2	2.33		28.6	27.2	3.06		29.8	28.4	3.88
	57.0 (13.9)		27	27	1.13		26.4	26.4	1.17		25.4	25.4	1.38		27	27	1.87		26.8	26.8	2.33		28	28	3.05		29.2	29.2	3.87

Manufacturer reserves the right to change, at any time, specifications and designs without notice and without obligations.

Detailed Cooling Capacities# - Comfort + Dehumidify Mode (Continued)

EVAPORATOR AIR °F (°C)		CONDENSER ENTERING AIR TEMPERATURES °F (°C)																											
		65.0 (18.3)				75.0 (23.9)				85.0 (29.4)				95.0 (35.0)				105.0 (40.6)				115.0 (46.1)				125.0 (51.7)			
EDB	EWB	ID SCFM	Capacity MBtuh†		Total Sys. KW**	ID SCFM	Capacity MBtuh†		Total Sys. KW**	ID SCFM	Capacity MBtuh†		Total Sys. KW**	ID SCFM	Capacity MBtuh†		Total Sys. KW**	ID SCFM	Capacity MBtuh†		Total Sys. KW**	ID SCFM	Capacity MBtuh†		Total Sys. KW**	ID SCFM	Capacity MBtuh†		Total Sys. KW**
			Total	Sens‡			Total	Sens‡			Total	Sens‡			Total	Sens‡			Total	Sens‡			Total	Sens‡			Total	Sens‡	
Q5H9V60 Maximum Demand																													
75 (23.9)	72.0 (22.2)	1750	59	23.4	3.67	1750	63.5	24.8	3.44	1750	66	25.8	4.13	1750	63	25	4.63	1750	60	24	5.27	1750	52	20.8	5.32	1750	39.5	16.1	4.79
	67.0 (19.4)		53.5	32	3.55		57	33	3.38		59.5	34.2	4.08		57	33.6	4.57		54	32.6	5.17		46.5	29.2	5.25		35.6	24	4.73
	63.0 (17.2)		49.5	38.5	3.47		52.5	39.5	3.36		55	41	4.06		52.5	40	4.53		50	39	5.13		42.5	35.6	5.13		33	30.2	4.67
	57.0 (13.9)		46	46	3.39		48.5	47.5	3.35		50.5	47	4.01		48	48	4.45		46	46	5.04		40.5	40	5.1		32.4	31.4	4.66
80 (26.7)	72.0 (22.2)	1750	59	31.8	3.69	1750	63	33.2	3.42	1750	66	34.2	4.14	1750	63	33.6	4.64	1750	60	32.6	5.29	1750	51	29.2	5.29	1750	39.5	24.2	4.82
	67.0 (19.4)		53.5	40.5	3.56		57	41.5	3.4		59.5	42.5	4.09		58	43	4.67		54	41	5.19		46	37.4	5.19		35.6	31.8	4.72
	63.0 (17.2)		50	46.5	3.49		53	48	3.37		55	49	4.05		53	48.5	4.55		50.5	47.5	5.16		43.5	43	5.18		34.8	33.8	4.7
	57.0 (13.9)		49	48.5	3.47		51.5	50.5	3.37		53	52.5	4.03		51.5	51	4.53		49.5	49	5.13		43.5	43	5.19		34.8	33.8	4.72
Q5H9V60 Median Demand																													
75 (23.9)	72.0 (22.2)	1400	48.5	19.5	2.32	1400	48.5	19.4	2.3	1400	48.5	19.3	2.65	1400	46.5	18.9	2.87	1400	45.5	18.6	3.48	1400	40.5	16.6	3.76	1400	34.8	14.3	3.92
	67.0 (19.4)		44	26.4	2.27		44	26.2	2.28		43.5	26.2	2.6		42	25.8	2.86		41	25.6	3.45		36.4	23.6	3.71		31.2	20.8	3.85
	63.0 (17.2)		40.5	31.8	2.23		40.5	31.6	2.26		40.5	31.6	2.6		39	31.2	2.87		38	31	3.44		33.6	28.8	3.68		29	25.8	3.84
	57.0 (13.9)		37.6	37.4	2.21		37.6	37	2.25		37.4	36.8	2.56		36.4	36	2.85		35.6	35.6	3.42		32.2	31.8	3.68		28.2	27.4	3.81
80 (26.7)	72.0 (22.2)	1400	48	26.4	2.3	1400	48.5	26.2	2.3	1400	48	26.2	2.63	1400	46.5	25.8	2.88	1400	45.5	25.6	3.49	1400	40	23.6	3.73	1400	34.6	20.8	3.91
	67.0 (19.4)		43.5	33.2	2.25		44	33	2.29		43.5	33	2.6		42	32.8	2.86		41	32.6	3.46		36.4	30.2	3.72		31.2	27.2	3.85
	63.0 (17.2)		41	38.5	2.25		41	38	2.28		40.5	38	2.58		39	37.8	2.84		38.5	37.6	3.46		34.6	33.6	3.7		30.2	29.4	3.83
	57.0 (13.9)		40	39.5	2.23		40	39.5	2.26		40	39.5	2.59		38.5	38.5	2.84		38	38	3.44		34.4	34.2	3.7		30.2	29.2	3.84
Q5H9V60 Minimum Demand																													
75 (23.9)	72.0 (22.2)	1400	42.5	17.4	1.8	1400	41	16.6	1.96	1400	40	16.4	1.88	1400	39	16.1	2.25	1400	38	16	2.77	1400	35.4	14.9	3.21	1400	32	13.4	3.56
	67.0 (19.4)		38.5	24.4	1.78		37	23.4	1.93		36	23.2	1.89		35	23.2	2.25		34.4	23	2.77		31.8	21.8	3.18		28.8	19.9	3.53
	63.0 (17.2)		35.8	29.8	1.78		34.2	28.8	1.91		33.4	28.6	1.9		32.4	28.4	2.26		31.8	28.4	2.77		29.4	27	3.15		26.8	24.8	3.52
	57.0 (13.9)		34	33.6	1.78		32.8	32.2	1.91		32	31.4	1.9		31.2	31	2.25		30.8	30.6	2.77		28.8	28.6	3.16		26.4	25.6	3.5
80 (26.7)	72.0 (22.2)	1400	42.5	24.4	1.8	1400	40.5	23.4	1.95	1400	39.5	23.2	1.86	1400	38.5	23.2	2.23	1400	38	23	2.78	1400	35.2	21.8	3.21	1400	31.8	20	3.57
	67.0 (19.4)		38.5	31	1.79		37	30.2	1.93		36	30	1.89		35	30	2.25		34.4	29.8	2.77		31.8	28.4	3.17		29	26.2	3.55
	63.0 (17.2)		36.6	34.6	1.79		35.2	33.8	1.93		34.2	33.6	1.89		33.4	33.2	2.25		33	32.8	2.78		30.8	30.6	3.17		28.4	27.4	3.54
	57.0 (13.9)		36.2	36	1.79		34.8	34.2	1.91		34.2	33.6	1.9		33.4	33.2	2.25		33	32.8	2.78		30.8	30.6	3.17		28.2	27.4	3.52

Detailed cooling capacities are based on indoor and outdoor unit at the same elevation per AHRI standard 210/240-2008. If additional tubing length and/or indoor unit is located above outdoor unit, a slight variation in capacity may occur

† Total and sensible capacities are net capacities. Blower motor heat has been subtracted.

‡ Sensible capacities shown are based on 80°F (27°C) entering air at the indoor coil. For sensible capacities at other than 80°F (27°C), deduct 835 Btuh (245 kW) per 1000 CFM (480 L/S) of indoor coil air for each degree below 80°F (27°C), or add 835 Btuh (245 kW) per 1000 CFM (480 L/S) of indoor coil air per degree above 80°F (27°C).

** System kw is total of indoor and outdoor unit kilowatts.

NOTE: When the required data falls between the published data, interpolation may be performed. Extrapolation is not an acceptable practice.

EDB — Entering Dry Bulb

EWB — Entering Wet Bulb

Manufacturer reserves the right to change, at any time, specifications and designs without notice and without obligations.

Detailed Cooling Capacities# - Cooling Efficiency Mode

EVAPORATOR AIR °F (°C)		CONDENSER ENTERING AIR TEMPERATURES °F (°C)																											
		65.0 (18.3)				75.0 (23.9)				85.0 (29.4)				95.0 (35.0)				105.0 (40.6)				115.0 (46.1)				125.0 (51.7)			
EDB	EWB	ID SCFM	Capacity MBtuh†		Total Sys. KW**	ID SCFM	Capacity MBtuh†		Total Sys. KW**	ID SCFM	Capacity MBtuh†		Total Sys. KW**	ID SCFM	Capacity MBtuh†		Total Sys. KW**	ID SCFM	Capacity MBtuh†		Total Sys. KW**	ID SCFM	Capacity MBtuh†		Total Sys. KW**	ID SCFM	Capacity MBtuh†		Total Sys. KW**
			Total	Sens‡			Total	Sens‡			Total	Sens‡			Total	Sens‡			Total	Sens‡			Total	Sens‡			Total	Sens‡	
Q5H9V24 Maximum Demand																													
75 (23.9)	72.0 (22.2)	805	26.4	11.6	1.18	805	27.2	11.5	1.38	805	28	11.2	1.59	805	26.8	10.3	1.7	805	25.6	9.8	1.97	805	24	9.4	2.28	805	23.4	9.7	2.63
	67.0 (19.4)		24	15.7	1.22		24.6	15.6	1.4		25.2	15.1	1.59		24.2	14.1	1.71		23	13.6	1.98		22	13.2	2.28		21	13.9	2.61
	63.0 (17.2)		22.2	19	1.24		22.8	18.8	1.41		23.2	18.1	1.59		22.2	17.1	1.71		21.2	16.6	1.98		20.2	16.2	2.26		19.4	17.1	2.6
	57.0 (13.9)		20.6	20.6	1.26		21	21	1.41		21.4	21.4	1.59		20.8	19.8	1.72		19.9	18.9	1.97		19.2	18.1	2.26		18.7	18.7	2.59
80 (26.7)	72.0 (22.2)	805	26.4	15.7	1.18	805	27.2	15.6	1.38	805	27.8	15.1	1.58	805	26.8	14.2	1.71	805	25.6	13.7	1.98	805	24.4	13.3	2.28	805	23.4	13.9	2.64
	67.0 (19.4)		24	19.8	1.22		24.6	19.6	1.4		25.2	19	1.59		24.2	17.9	1.7		23	17.4	1.98		22	17	2.28		21	18	2.61
	63.0 (17.2)		22.4	22.4	1.24		22.8	22.6	1.4		23.4	22	1.59		22.4	20.6	1.71		21.4	20	1.97		20.8	18.9	2.27		20	20	2.6
	57.0 (13.9)		21.8	21.8	1.24		22.4	22.4	1.41		22.8	22.8	1.59		22.2	21.2	1.72		21.4	20.2	1.99		20.6	19.4	2.27		20	20	2.6
Q5H9V24 Median Demand																													
75 (23.9)	72.0 (22.2)	644	17.5	8	0.53	644	17.4	7.6	0.64	644	17.1	7.2	0.75	644	17.1	6.9	0.91	644	16.5	6.6	1.08	644	15.5	6.3	1.31	644	14.7	6.5	1.55
	67.0 (19.4)		15.7	11.3	0.58		15.6	10.9	0.67		15.3	10.3	0.77		15.3	10	0.92		14.7	9.7	1.08		13.9	9.4	1.32		13.1	9.9	1.54
	63.0 (17.2)		14.5	13.9	0.61		14.4	13.5	0.69		14.1	12.8	0.78		14.1	12.3	0.94		13.6	12	1.09		12.9	11.7	1.33		12.3	11.9	1.55
	57.0 (13.9)		13.9	13.9	0.62		13.9	13.9	0.7		13.7	13.7	0.79		13.7	13.1	0.94		13.3	12.6	1.09		12.7	12	1.33		12.2	12.2	1.55
80 (26.7)	72.0 (22.2)	644	17.4	11.3	0.53	644	17.3	11	0.64	644	17	10.4	0.75	644	17	10	0.91	644	16.4	9.8	1.08	644	15.5	9.5	1.32	644	14.6	10	1.55
	67.0 (19.4)		15.7	14.6	0.57		15.6	14.2	0.66		15.3	13.5	0.77		15.3	13	0.92		14.8	12.7	1.09		14	12.4	1.33		13.3	13.1	1.55
	63.0 (17.2)		15.2	15.2	0.59		14.9	14.9	0.68		14.7	14.7	0.77		14.8	14.1	0.93		14.3	13.6	1.08		13.7	12.9	1.32		13.2	13.2	1.55
	57.0 (13.9)		14.9	14.9	0.59		14.9	14.9	0.68		14.7	14.7	0.77		14.7	14.1	0.93		14.3	13.6	1.09		13.7	12.9	1.32		13.2	13.2	1.56
Q5H9V24 Minimum Demand																													
75 (23.9)	72.0 (22.2)	644	12.3	6	0.36	644	11.8	5.7	0.41	644	11.3	5.2	0.48	644	12	5.2	0.63	644	11.6	5.1	0.76	644	10.9	4.9	0.95	644	10.1	5	1.1
	67.0 (19.4)		11	9.3	0.39		10.6	8.9	0.44		10.1	8.3	0.5		10.7	8.3	0.64		10.4	8.1	0.77		9.7	7.9	0.95		9.1	8.3	1.12
	63.0 (17.2)		10.5	10.3	0.41		10.2	9.6	0.45		9.7	9.6	0.51		10.2	9.8	0.65		9.9	9.4	0.77		9.4	8.9	0.96		8.9	8.9	1.12
	57.0 (13.9)		10.3	10.3	0.41		10.1	10.1	0.45		9.6	9.6	0.51		10.2	9.8	0.65		9.9	9.4	0.77		9.4	8.8	0.96		8.9	8.9	1.12
80 (26.7)	72.0 (22.2)	644	12.2	9.4	0.35	644	11.8	9	0.41	644	11.2	8.4	0.48	644	11.9	8.4	0.62	644	11.5	8.2	0.75	644	10.8	8	0.94	644	10.1	8.4	1.11
	67.0 (19.4)		11.2	11.2	0.38		11	10.9	0.43		10.5	10.2	0.49		11.1	10.2	0.63		10.8	10.2	0.77		10.2	9.6	0.95		9.7	9.7	1.11
	63.0 (17.2)		11.1	11.1	0.38		10.9	10.9	0.43		10.5	10.4	0.49		11	10.6	0.63		10.8	10.2	0.77		10.2	9.6	0.95		9.7	9.7	1.11
	57.0 (13.9)		11.1	11.1	0.38		10.9	10.9	0.43		10.4	10.4	0.49		11	10.6	0.64		10.7	10.2	0.76		10.2	9.6	0.95		9.7	9.7	1.12

Manufacturer reserves the right to change, at any time, specifications and designs without notice and without obligations.

Detailed Cooling Capacities# - Cooling Efficiency Mode (Continued)

EVAPORATOR AIR °F (°C)		CONDENSER ENTERING AIR TEMPERATURES °F (°C)																											
		65.0 (18.3)				75.0 (23.9)				85.0 (29.4)				95.0 (35.0)				105.0 (40.6)				115.0 (46.1)				125.0 (51.7)			
EDB	EWB	ID SCFM	Capacity MBtuh†		Total Sys. KW**	ID SCFM	Capacity MBtuh†		Total Sys. KW**	ID SCFM	Capacity MBtuh†		Total Sys. KW**	ID SCFM	Capacity MBtuh†		Total Sys. KW**	ID SCFM	Capacity MBtuh†		Total Sys. KW**	ID SCFM	Capacity MBtuh†		Total Sys. KW**	ID SCFM	Capacity MBtuh†		Total Sys. KW**
			Total	Sens‡			Total	Sens‡			Total	Sens‡			Total	Sens‡			Total	Sens‡			Total	Sens‡			Total	Sens‡	
Q5H9V36 Maximum Demand																													
75 (23.9)	72.0 (22.2)	1225	29.4	11.9	1.42	1225	35.2	14.1	2.25	1225	39	15.7	2.56	1225	38.5	15.5	2.83	1225	37	15	3.14	1225	36	14.3	3.61	1225	30	12.1	3.75
	67.0 (19.4)		26.6	17.2	1.43		32	19.6	2.23		35.4	21.4	2.55		34.6	21.4	2.8		33.4	21	3.12		32.2	20.2	3.58		27.2	18	3.72
	63.0 (17.2)		24.8	21.4	1.44		29.6	23.8	2.2		32.8	25.8	2.55		32	26	2.8		31	25.6	3.11		29.8	24.8	3.55		25.2	22.6	3.67
	57.0 (13.9)		24	23.8	1.45		28	27.8	2.19		30.4	30.4	2.53		30	30	2.78		29.2	29.2	3.08		28.4	28	3.52		24.8	24	3.68
80 (26.7)	72.0 (22.2)	1225	29.2	17.2	1.41	1225	35	19.5	2.25	1225	39	21.4	2.57	1225	38	21.4	2.8	1225	37	21	3.15	1225	35.6	20.2	3.63	1225	30	18	3.77
	67.0 (19.4)		26.6	22.4	1.43		31.8	25	2.22		35.4	27	2.56		34.8	27.6	2.81		33.4	26.8	3.12		32.2	26.2	3.58		27.2	23.8	3.72
	63.0 (17.2)		25.6	25.4	1.44		30	29	2.21		33	31.2	2.55		32.4	31.4	2.8		31.8	30	3.12		30.8	28.8	3.56		26.6	25.6	3.72
	57.0 (13.9)		25.6	25.2	1.44		29.8	29.6	2.21		32.4	32.4	2.54		32	32	2.79		31.2	31.2	3.1		30.4	30	3.56		26.6	25.6	3.72
Q5H9V36 Median Demand																													
75 (23.9)	72.0 (22.2)	950	18.8	8.1	0.59	950	20.4	8.8	0.84	950	21.4	9.3	1	950	21.6	9.4	1.21	950	20.6	9	1.4	950	20.2	8.8	1.73	950	17.6	7.8	2
	67.0 (19.4)		17	12.4	0.63		18.5	13.1	0.87		19.4	13.8	1.03		19.4	14.1	1.22		18.4	13.8	1.39		18.2	13.6	1.73		15.8	12.5	1.99
	63.0 (17.2)		15.9	15.4	0.64		17.2	16.4	0.88		18	17.1	1.04		18	17.5	1.22		17.4	16.1	1.4		17.3	16.1	1.74		15.2	14.3	1.99
	57.0 (13.9)		15.8	15.7	0.65		17	17	0.88		17.8	17.8	1.05		17.8	17.8	1.23		17.2	17.2	1.4		17.1	16.9	1.74		15.1	14.7	1.99
80 (26.7)	72.0 (22.2)	950	18.7	12.4	0.59	950	20.4	13.2	0.85	950	21.4	13.8	1	950	21.4	14.1	1.2	950	20.4	13.8	1.39	950	20.2	13.6	1.74	950	17.4	12.5	2
	67.0 (19.4)		17.2	16.3	0.62		18.6	17.3	0.86		19.5	18.1	1.03		19.5	18.5	1.22		18.7	18.2	1.4		18.5	17.9	1.74		16.4	15.4	2
	63.0 (17.2)		17	16.8	0.62		18.3	18.2	0.87		19.1	19.1	1.03		19.2	19.2	1.22		18.5	18.5	1.4		18.4	18.2	1.74		16.3	15.8	1.99
	57.0 (13.9)		17	16.8	0.63		18.3	18.2	0.87		19.1	19.1	1.03		19.2	19.2	1.22		18.5	18.5	1.4		18.4	18.2	1.74		16.3	15.8	1.99
Q5H9V36 Minimum Demand																													
75 (23.9)	72.0 (22.2)	950	12.5	6	0.38	950	12	6	0.47	950	11.4	5.9	0.55	950	11.9	6.2	0.68	950	11.6	6.1	0.81	950	12.2	6.2	1.1	950	11.1	5.7	1.38
	67.0 (19.4)		11.3	10.1	0.41		10.8	10.1	0.49		10.4	10.1	0.57		10.8	10.5	0.69		10.5	10.4	0.83		11	10.6	1.11		10.1	9.4	1.38
	63.0 (17.2)		11.1	11	0.42		10.7	10.7	0.49		10.3	10.3	0.57		10.7	10.7	0.69		10.5	10.5	0.83		10.9	10.7	1.11		10.1	9.8	1.38
	57.0 (13.9)		11.1	11	0.42		10.7	10.7	0.49		10.3	10.3	0.57		10.7	10.7	0.69		10.5	10.5	0.83		10.9	10.8	1.11		10.1	9.8	1.38
80 (26.7)	72.0 (22.2)	950	12.4	10.2	0.38	950	11.9	10.2	0.46	950	11.4	10.3	0.55	950	11.9	10.7	0.68	950	11.6	10.7	0.81	950	12.2	10.8	1.1	950	11.1	10.2	1.38
	67.0 (19.4)		12	11.9	0.39		11.6	11.6	0.47		11.2	11.2	0.55		11.6	11.6	0.68		11.4	11.4	0.81		11.9	11.8	1.1		11	10.6	1.38
	63.0 (17.2)		12	11.9	0.39		11.6	11.6	0.47		11.2	11.2	0.56		11.6	11.6	0.68		11.4	11.4	0.81		11.9	11.8	1.1		11	10.6	1.38
	57.0 (13.9)		12	11.9	0.39		11.6	11.6	0.47		11.2	11.2	0.56		11.6	11.6	0.68		11.4	11.4	0.82		11.9	11.8	1.1		11	10.6	1.38

Manufacturer reserves the right to change, at any time, specifications and designs without notice and without obligations.

Detailed Cooling Capacities# - Cooling Efficiency Mode (Continued)

EVAPORATOR AIR °F (°C)		CONDENSER ENTERING AIR TEMPERATURES °F (°C)																											
		65.0 (18.3)				75.0 (23.9)				85.0 (29.4)				95.0 (35.0)				105.0 (40.6)				115.0 (46.1)				125.0 (51.7)			
EDB	EWB	ID SCFM	Capacity MBtuh†		Total Sys. KW**	ID SCFM	Capacity MBtuh†		Total Sys. KW**	ID SCFM	Capacity MBtuh†		Total Sys. KW**	ID SCFM	Capacity MBtuh†		Total Sys. KW**	ID SCFM	Capacity MBtuh†		Total Sys. KW**	ID SCFM	Capacity MBtuh†		Total Sys. KW**	ID SCFM	Capacity MBtuh†		Total Sys. KW**
			Total	Sens‡			Total	Sens‡			Total	Sens‡			Total	Sens‡			Total	Sens‡			Total	Sens‡			Total	Sens‡	
Q5H9V48 Maximum Demand																													
75 (23.9)	72.0 (22.2)	1400	48	18.5	2.48	1400	51	19.4	2.52	1400	55	21.4	3.33	1400	52	21	3.74	1400	49.5	20.8	4.29	1400	48	20.4	5.03	1400	42	17.7	5.17
	67.0 (19.4)		43.5	25.2	2.44		46	26	2.52		49.5	28	3.3		47	27.8	3.71		45	27.8	4.27		43.5	27.8	4.99		37.6	25.2	5.07
	63.0 (17.2)		40	30.4	2.39		42.5	31.2	2.52		46	33.4	3.31		43.5	33.4	3.69		41	33.4	4.18		40	33.6	4.93		34.6	31.2	5
	57.0 (13.9)		37	36	2.36		39	37.4	2.51		41.5	40	3.25		40	39	3.65		38	38	4.15		37.2	37.2	4.87		33.2	33.2	4.97
80 (26.7)	72.0 (22.2)	1400	47.5	25.2	2.46	1400	50.5	26	2.51	1400	55	28.2	3.34	1400	52	28	3.75	1400	49.5	28	4.3	1400	48	28	5.05	1400	41.5	25.4	5.12
	67.0 (19.4)		43	31.8	2.42		46	32.6	2.52		49.5	34.8	3.31		47	34.8	3.73		44.5	35	4.23		43.5	35.2	5		37.6	32.8	5.07
	63.0 (17.2)		40.5	36.8	2.41		42.5	37.6	2.51		46	40	3.3		43.5	40	3.68		41.5	40.5	4.2		40.5	40.5	4.95		35.8	35.8	5.04
	57.0 (13.9)		39.5	38.5	2.39		41.5	40	2.52		44	43	3.28		42	42	3.66		40.5	40.5	4.19		39.5	39.5	4.9		35.6	35.6	5.01
Q5H9V48 Median Demand																													
75 (23.9)	72.0 (22.2)	1120	33.6	13.4	1.2	1120	34.4	13.6	1.28	1120	35	14.1	1.64	1120	32.8	13.8	1.92	1120	33.2	14.4	2.47	1120	31.8	14.1	2.94	1120	29.4	12.9	3.36
	67.0 (19.4)		30.4	18.8	1.22		31	18.9	1.31		31.6	19.5	1.67		29.6	19.4	1.94		30	20.2	2.47		28.8	20.2	2.94		26.4	19.1	3.33
	63.0 (17.2)		28	23	1.22		28.6	23.2	1.34		29.2	23.8	1.69		27.4	23.8	1.95		27.6	24.6	2.46		26.4	24.8	2.91		24.4	23.8	3.31
	57.0 (13.9)		26.6	26	1.23		27.2	26.2	1.35		27.6	27	1.71		26	26	1.95		26.2	26.2	2.45		25.4	25.4	2.91		24	24	3.31
80 (26.7)	72.0 (22.2)	1120	33.4	18.8	1.2	1120	34.2	19	1.28	1120	35	19.6	1.65	1120	32.8	19.5	1.93	1120	33	20.2	2.46	1120	31.8	20.2	2.96	1120	29.2	19.2	3.35
	67.0 (19.4)		30.4	24.2	1.22		31	24.2	1.31		31.6	25	1.68		29.6	25	1.94		29.8	26	2.46		28.8	26	2.94		26.4	25.2	3.32
	63.0 (17.2)		28.8	27	1.22		29.2	28	1.34		29.8	28.2	1.69		28.4	26.8	1.95		28.4	28.4	2.46		27.4	27.4	2.93		25.8	25.8	3.32
	57.0 (13.9)		28.4	27.6	1.22		29	28	1.33		29.4	28.8	1.69		27.8	27.8	1.94		28	28	2.45		27.2	27.2	2.92		25.8	25.8	3.32
Q5H9V48 Minimum Demand																													
75 (23.9)	72.0 (22.2)	1120	26.2	10.9	0.82	1120	25.4	10.5	0.88	1120	23.8	10.2	1.06	1120	22.2	10	1.27	1120	24.8	11.3	1.79	1120	23.6	11.1	2.16	1120	23.2	10.8	2.69
	67.0 (19.4)		23.6	16.3	0.85		22.8	15.9	0.92		21.4	15.6	1.09		19.9	15.6	1.29		22.2	17.1	1.8		21.2	17.1	2.16		20.8	16.9	2.68
	63.0 (17.2)		22	20.2	0.87		21.2	19.8	0.94		20	18.8	1.1		18.7	18.7	1.3		20.8	20.8	1.82		20	20	2.17		19.8	19.8	2.68
	57.0 (13.9)		21.6	21	0.87		21	20.2	0.94		19.9	19.5	1.1		18.7	18.7	1.31		20.6	20.6	1.82		19.8	19.8	2.17		19.6	19.6	2.67
80 (26.7)	72.0 (22.2)	1120	26	16.3	0.81	1120	25.2	15.9	0.88	1120	23.6	15.7	1.06	1120	22	15.7	1.26	1120	24.6	17.2	1.79	1120	23.6	17.1	2.17	1120	23	17	2.68
	67.0 (19.4)		23.8	21.4	0.85		23	21	0.92		21.6	20.6	1.08		20.4	19.3	1.28		22.4	22.4	1.81		21.4	21.4	2.16		21.6	20.4	2.69
	63.0 (17.2)		23.2	22.6	0.85		22.6	21.8	0.92		21.4	21	1.08		20.2	20.2	1.29		22.2	22.2	1.81		21.4	21.4	2.17		21.2	21.2	2.68
	57.0 (13.9)		23.2	22.6	0.85		22.6	21.6	0.92		21.4	21	1.08		20.2	20.2	1.29		22.2	22.2	1.82		21.4	21.4	2.17		21.2	21.2	2.68

Manufacturer reserves the right to change, at any time, specifications and designs without notice and without obligations.

Detailed Cooling Capacities# - Cooling Efficiency Mode (Continued)

EVAPORATOR AIR °F (°C)		CONDENSER ENTERING AIR TEMPERATURES °F (°C)																											
		65.0 (18.3)				75.0 (23.9)				85.0 (29.4)				95.0 (35.0)				105.0 (40.6)				115.0 (46.1)				125.0 (51.7)			
EDB	EWB	ID SCFM	Capacity MBtuh†		Total Sys. KW**	ID SCFM	Capacity MBtuh†		Total Sys. KW**	ID SCFM	Capacity MBtuh†		Total Sys. KW**	ID SCFM	Capacity MBtuh†		Total Sys. KW**	ID SCFM	Capacity MBtuh†		Total Sys. KW**	ID SCFM	Capacity MBtuh†		Total Sys. KW**	ID SCFM	Capacity MBtuh†		Total Sys. KW**
			Total	Sens‡			Total	Sens‡			Total	Sens‡			Total	Sens‡			Total	Sens‡			Total	Sens‡			Total	Sens‡	
Q5H9V60 Maximum Demand																													
75 (23.9)	72.0 (22.2)	1750	59.5	25.6	3.61	1750	65	27	3.66	1750	68	27.6	4.47	1750	64.5	26	4.89	1750	61	24.2	5.38	1750	52	20.6	5.24	1750	39.5	16.1	4.78
	67.0 (19.4)		54	34.8	3.49		58.5	36	3.61		61	36.4	4.39		58.5	34.8	4.84		55	32.8	5.29		46.5	29	5.17		35.4	24	4.69
	63.0 (17.2)		50	42	3.41		54	43	3.59		56.5	43.5	4.39		54	41.5	4.8		50.5	39.5	5.21		43	35.4	5.12		33	30	4.67
	57.0 (13.9)		46.5	46.5	3.34		49.5	49.5	3.56		52	50	4.33		49.5	49.5	4.74		47	46.5	5.16		40.5	40	5.02		32.4	31.4	4.66
80 (26.7)	72.0 (22.2)	1750	59.5	34.6	3.62	1750	64.5	36	3.64	1750	67	36.6	4.41	1750	64.5	34.8	4.9	1750	61	33	5.4	1750	51.5	29	5.27	1750	39.5	24.2	4.81
	67.0 (19.4)		54	44	3.5		58.5	45	3.62		61	45.5	4.41		58	43	4.67		55	41.5	5.31		46.5	37.2	5.18		35.6	31.8	4.72
	63.0 (17.2)		50.5	50.5	3.43		54.5	52	3.6		56.5	52.5	4.37		54	50.5	4.79		51	48	5.23		43.5	43	5.11		34.8	33.8	4.7
	57.0 (13.9)		49.5	49.5	3.41		52.5	52.5	3.57		54.5	54.5	4.35		52.5	52.5	4.76		50	49.5	5.21		43.5	42.5	5.11		34.8	33.8	4.7
Q5H9V60 Median Demand																													
75 (23.9)	72.0 (22.2)	1400	39	17.4	1.46	1400	40	17.4	1.67	1400	40	17.1	2.03	1400	38	16.2	2.24	1400	38.5	16.2	2.82	1400	33.4	14.1	2.97	1400	27.8	12	3.08
	67.0 (19.4)		35.2	24.8	1.46		36	24.8	1.68		36.2	24.4	2.04		34.4	23.4	2.27		35	23.2	2.85		30	20.8	2.95		25	18.5	3.06
	63.0 (17.2)		32.6	30.6	1.47		33.4	30.6	1.7		33.4	30.2	2.04		31.8	29	2.28		32.2	28.6	2.82		27.8	26	2.94		23.8	21.6	3.07
	57.0 (13.9)		31.4	31.4	1.47		32	32	1.69		32.2	32.2	2.04		30.8	30.8	2.27		31.2	31	2.83		27.4	26.8	2.93		23.4	22.8	3.05
80 (26.7)	72.0 (22.2)	1400	38.5	24.8	1.45	1400	39.5	24.8	1.66	1400	40	24.4	2.03	1400	38	23.4	2.25	1400	38.5	23.2	2.84	1400	33.2	21	2.96	1400	27.8	18.6	3.1
	67.0 (19.4)		35.2	32.2	1.46		36	32	1.68		36	31.6	2.03		34.4	30.4	2.27		34.8	30.2	2.83		30.2	27.4	2.96		25.6	23.2	3.08
	63.0 (17.2)		33.6	33.6	1.47		34.6	34.6	1.69		34.6	34.6	2.03		33.2	33.2	2.28		33.4	33.2	2.83		29.4	29	2.94		25.2	24.4	3.07
	57.0 (13.9)		33.6	33.6	1.47		34.2	34.2	1.69		34.4	34.4	2.03		33	33	2.27		33.4	33.2	2.84		29.4	28.8	2.95		25.2	24.4	3.07
Q5H9V60 Minimum Demand																													
75 (23.9)	72.0 (22.2)	1400	27.2	13.1	0.83	1400	26.2	12.5	1.04	1400	25.2	12	1.17	1400	23.8	11.3	1.38	1400	26.4	12	1.89	1400	24	11	2.14	1400	21.4	9.9	2.42
	67.0 (19.4)		24.6	20.6	0.86		23.6	19.9	1.07		22.6	19.2	1.19		21.4	18.4	1.41		23.8	18.9	1.92		21.6	17.7	2.16		19.2	16.3	2.41
	63.0 (17.2)		23.4	23.4	0.88		22.8	22	1.08		21.8	21.8	1.21		20.6	20.6	1.41		22.6	22.4	1.92		20.8	20.4	2.16		18.7	18.1	2.42
	57.0 (13.9)		23.2	23.2	0.88		22.6	22.6	1.08		21.8	21.8	1.21		20.6	20.6	1.41		22.6	22.4	1.93		20.8	20.4	2.16		18.6	18.1	2.41
80 (26.7)	72.0 (22.2)	1400	27.2	20.6	0.83	1400	26	19.9	1.04	1400	25	19.3	1.16	1400	23.6	18.5	1.37	1400	26.2	19	1.89	1400	23.8	17.8	2.14	1400	21.2	16.4	2.41
	67.0 (19.4)		25.2	25.2	0.86		24.4	24.4	1.06		23.6	22.8	1.18		22.4	22.4	1.39		24.6	23.4	1.91		22.4	22	2.15		20.2	19.6	2.42
	63.0 (17.2)		25	25	0.86		24.2	24.2	1.06		23.4	23.4	1.18		22.4	22.4	1.39		24.4	24.2	1.91		22.4	22	2.15		20.2	19.6	2.42
	57.0 (13.9)		25	25	0.86		24.2	24.2	1.06		23.4	23.4	1.18		22.2	22.2	1.38		24.4	24.2	1.91		22.4	22	2.15		20.2	19.5	2.42

Detailed cooling capacities are based on indoor and outdoor unit at the same elevation per AHRI standard 210/240-2008. If additional tubing length and/or indoor unit is located above outdoor unit, a slight variation in capacity may occur

† Total and sensible capacities are net capacities. Blower motor heat has been subtracted.

‡ Sensible capacities shown are based on 80°F (27°C) entering air at the indoor coil. For sensible capacities at other than 80°F (27°C), deduct 835 Btuh (245 kW) per 1000 CFM (480 L/S) of indoor coil air for each degree below 80°F (27°C), or add 835 Btuh (245 kW) per 1000 CFM (480 L/S) of indoor coil air per degree above 80°F (27°C).

** System kw is total of indoor and outdoor unit kilowatts.

NOTE: When the required data falls between the published data, interpolation may be performed. Extrapolation is not an acceptable practice.

EDB — Entering Dry Bulb

EWB — Entering Wet Bulb

Manufacturer reserves the right to change, at any time, specifications and designs without notice and without obligations.

Heat Pump Heating Performance

INDOOR AIR °F (°C)	OUTDOOR ENTERING AIR TEMPERATURES °F (°C)																															
	-3 (-19.4)				7 (-13.9)				17 (-8.3)				27 (-2.8)				37 (2.7)				47 (8.3)				57 (13.9)				67 (19.4)			
EDB	ID SCFM	Capacity MBtuh		Total Sys. KW*	ID SCFM	Capacity MBtuh		Total Sys. KW*	ID SCFM	Capacity MBtuh		Total Sys. KW**	ID SCFM	Capacity MBtuh		Total Sys. KW*	ID SCFM	Capacity MBtuh		Total Sys. KW*	ID SCFM	Capacity MBtuh		Total Sys. KW*	ID SCFM	Capacity MBtuh		Total Sys. KW*	ID SCFM	Capacity MBtuh		Total Sys. KW*
		Total	Integ†			Total	Integ†			Total	Integ†			Total	Integ†			Total	Integ†			Total	Integ†			Total	Integ†			Total	Integ†	
Q5H9V24 Maximum Demand																																
65 (18.3)		13.8	11.7	2.11		23.2	19.7	3.33		21	17.7	2.63		24	19.9	2.31		25.2	23	2.09		25.4	25.4	1.85		24.4	24.4	1.55		24.4	24.4	1.27
70 (21.1)	805	13.5	11.5	2.08	805	22.6	19.3	3.31	805	20.2	20.2	2.19	805	23	19.2	2.29	805	23.6	21.6	2.08	805	25	25	1.89	805	24.2	24.2	1.66	805	24.4	24.4	1.35
75 (23.9)		13.2	11.2	2.08		22	18.7	3.32		20.2	17	2.62		21.4	17.9	2.27		21.2	19.4	2.09		24.4	24.4	1.9		23.8	23.8	1.7		23.6	23.6	1.43
Q5H9V24 Median Demand																																
65 (18.3)		10	8.5	1.42		12.7	10.8	1.62		11.7	9.8	1.34		13.7	11.4	1.18		13.9	12.7	0.99		13.8	13.8	0.9		15.2	15.2	0.8		16.4	16.4	0.71
70 (21.1)	645	9.7	8.3	1.41	645	12.4	10.5	1.61	645	11.6	9.8	1.33	645	13.4	11.1	1.18	645	13.4	12.3	0.98	645	13.5	13.5	0.95	645	14.9	14.9	0.86	645	16.1	16.1	0.77
75 (23.9)		9	7.7	1.4		11.7	10	1.6		11.3	9.5	1.32		12.7	10.6	1.17		12.1	11.1	0.97		13.2	13.2	1		14.6	14.6	0.91		15.8	15.8	0.82
Q5H9V24 Minimum Demand																																
65 (18.3)		8.1	6.9	1.1		7.6	6.4	1.04		7.6	6.4	0.85		8.9	7.4	0.76		8.6	7.9	0.6		9	9	0.55		10.6	10.6	0.51		12.9	12.9	0.51
70 (21.1)	645	7.5	6.4	1.09	645	7.4	6.3	1.04	645	7.4	6.3	0.86	645	8.8	7.3	0.76	645	8.4	7.7	0.64	645	9	9	0.69	645	10.4	10.4	0.56	645	12.6	12.6	0.55
75 (23.9)		5.8	4.9	1.08		7.2	6.2	1.02		7.2	6.1	0.85		8.3	6.9	0.76		8.3	7.6	0.65		8.6	8.6	0.62		10.1	10.1	0.59		12.4	12.4	0.6
Q5H9V36 Maximum Demand																																
65 (18.3)		19.8	18.6	2.21		27.8	26.8	3.18		28	27	2.79		32.8	30.8	2.95		37.6	36	3.11		36.2	36.2	2.79		38	38	2.55		36	36	2.13
70 (21.1)	1225	19.2	18.1	2.2	1225	26.6	25.4	3.17	1225	25.2	25.2	2.56	1225	31.6	29.6	2.95	1225	35.6	34.2	3.09	1225	35.8	35.8	2.68	1225	35.6	35.6	2.56	1225	35.4	35.4	2.24
75 (23.9)		18.3	17.2	2.18		24.2	23.2	3.14		24.2	23.4	2.77		29.4	27.6	2.93		32.6	31.4	3.08		30.4	30.4	2.77		33.6	33.6	2.55		34.4	34.4	2.26
Q5H9V36 Median Demand																																
65 (18.3)		12.9	12.1	1.38		15.2	14.5	1.66		15.6	15	1.47		18	16.9	1.42		18.1	17.4	1.22		18.8	18.8	1.18		19.3	19.3	1.01		20.4	20.4	0.9
70 (21.1)	950	12.5	11.8	1.38	950	14.9	14.3	1.65	950	15.3	14.7	1.46	950	17.7	16.6	1.41	950	17.8	17.1	1.22	950	18.5	18.5	1.25	950	18.9	18.9	1.07	950	20	20	0.96
75 (23.9)		11.8	11.1	1.37		14.6	14	1.65		14.8	14.3	1.45		17.2	16.1	1.41		16.9	16.2	1.21		18	18	1.25		18.6	18.6	1.14		19.7	19.7	1.03
Q5H9V36 Minimum Demand																																
65 (18.3)		9.1	8.6	1.06		8.7	8.3	0.97		9.6	9.3	0.91		11.4	10.7	0.87		9.4	9	0.63		8.8	8.8	0.68		10.6	10.6	0.52		13	13	0.52
70 (21.1)	950	8.9	8.4	1.05	950	8.4	8	1.01	950	9.3	9	0.94	950	11.1	10.4	0.91	950	9.2	8.8	0.66	950	8.6	8.6	0.72	950	10.4	10.4	0.56	950	12.7	12.7	0.56
75 (23.9)		8.5	8.1	1.04		8	7.7	1.03		9	8.7	0.97		10.8	10.1	0.94		9	8.6	0.7		8.4	8.4	0.76		10.2	10.2	0.6		12.5	12.5	0.61

Heat Pump Heating Performance (Continued)

INDOOR AIR °F (°C)	OUTDOOR ENTERING AIR TEMPERATURES °F (°C)																															
	-3 (-19.4)				7 (-13.9)				17 (-8.3)				27 (-2.8)				37 (2.7)				47 (8.3)				57 (13.9)				67 (19.4)			
EDB	ID SCFM	Capacity MBtuh		Total Sys. KW*	ID SCFM	Capacity MBtuh		Total Sys. KW*	ID SCFM	Capacity MBtuh		Total Sys. KW**	ID SCFM	Capacity MBtuh		Total Sys. KW*	ID SCFM	Capacity MBtuh		Total Sys. KW*	ID SCFM	Capacity MBtuh		Total Sys. KW*	ID SCFM	Capacity MBtuh		Total Sys. KW*	ID SCFM	Capacity MBtuh		Total Sys. KW*
		Total	Integ†			Total	Integ†			Total	Integ†			Total	Integ†			Total	Integ†			Total	Integ†			Total	Integ†			Total	Integ†	
Q5H9V48 Maximum Demand																																
65 (18.3)		27.6	26	2.87		41	38.5	4.26		40	40	3.99		50	45.5	4.34		50.5	50	4.35		50.5	50.5	3.68		42.5	42.5	3.1		40	40	2.38
70 (21.1)	1400	27	25.6	2.87	1400	40	37.8	4.28	1400	40	40	4.16	1400	49.5	45	4.45	1400	50	49.5	4.5	1400	49	49	3.86	1400	42	42	3.24	1400	39.5	39.5	2.52
75 (23.9)		26	24.6	2.86		39	36.6	4.3		39	39	4.14		48	43.5	4.45		48.5	48	4.5		48	48	3.95		41.5	41.5	3.38		39	39	2.65
Q5H9V48 Median Demand																																
65 (18.3)		18.5	17.4	1.84		24.4	23	2.28		27.4	25.6	2.33		29	26.4	2.16		26.4	26.2	1.84		25	25	1.72		25.4	25.4	1.52		25.8	25.8	1.28
70 (21.1)	1120	18.2	17.1	1.92	1120	24.2	22.6	2.38	1120	27	25.2	2.43	1120	28.6	26	2.24	1120	26.2	25.8	1.95	1120	24.6	24.6	1.81	1120	25	25	1.61	1120	25.4	25.4	1.37
75 (23.9)		17.8	16.8	1.92		23.8	22.4	2.47		26.6	24.8	2.51		28.2	25.6	2.31		25.4	25.2	1.98		23.6	23.6	1.83		24.6	24.6	1.7		25	25	1.47
Q5H9V48 Minimum Demand																																
65 (18.3)		14.3	13.5	1.43		16.7	15.7	1.53		19.6	18.3	1.59		19	17.3	1.33		14.4	14.2	0.95		17.5	17.5	1.04		17.4	17.4	0.95		19.2	19.2	0.88
70 (21.1)	1120	14.1	13.2	1.5	1120	16.5	15.5	1.61	1120	19.3	18	1.66	1120	18.7	17	1.4	1120	14.1	14	1.01	1120	17.2	17.2	1.11	1120	17.1	17.1	1.02	1120	18.9	18.9	0.96
75 (23.9)		13.8	13	1.56		16.2	15.2	1.67		19	17.7	1.74		18.4	16.7	1.47		13.8	13.7	1.07		16.9	16.9	1.18		16.8	16.8	1.09		18.6	18.6	1.03
Q5H9V60 Maximum Demand																																
65 (18.3)		31	29	3.27		45.5	42.5	4.8		49	49	5.02		60	54.5	5.26		60.5	60	5.25		59	59	4.43		52	52	3.87		53.5	53.5	3.04
70 (21.1)	1750	30.4	28.6	3.35	1750	45	42	4.88	1750	48.5	48.5	5.19	1750	59.5	54	5.45	1750	59.5	59	5.32	1750	58	58	4.59	1750	51.5	51.5	4.06	1750	51	51	3.28
75 (23.9)		30	28.2	3.33		44.5	41.5	4.98		47.5	47.5	5.35		58.5	53	5.64		57.5	57	5.3		57.5	57.5	4.79		50.5	50.5	4.18		50.5	50.5	3.44
Q5H9V60 Median Demand																																
65 (18.3)		19.2	18	1.89		26.2	24.4	2.38		30.2	28	2.53		33.4	30.2	2.46		31.8	31.6	2.22		28	28	1.93		30.2	30.2	1.78		32.8	32.8	1.59
70 (21.1)	1400	18.9	17.7	1.96	1400	25.8	24.2	2.47	1400	29.8	27.6	2.63	1400	33	29.8	2.56	1400	31.4	31.2	2.32	1400	27.6	27.6	2.03	1400	29.8	29.8	1.9	1400	32.4	32.4	1.71
75 (23.9)		18.6	17.4	2.03		25.4	23.8	2.57		29.4	27.4	2.73		32.6	29.4	2.67		31	30.8	2.42		27.2	27.2	2.13		29.4	29.4	2.02		31.8	31.8	1.81
Q5H9V60 Minimum Demand																																
65 (18.3)		13.8	12.9	1.39		16.9	15.8	1.49		19.9	18.5	1.58		21.2	19.2	1.44		18.1	18	1.15		18.6	18.6	1.14		19.8	19.8	1.05		24	24	1.05
70 (21.1)	1400	13.5	12.7	1.45	1400	16.6	15.6	1.56	1400	19.6	18.2	1.66	1400	21	18.9	1.54	1400	17.8	17.7	1.23	1400	18.2	18.2	1.22	1400	19.4	19.4	1.13	1400	23.6	23.6	1.14
75 (23.9)		13.3	12.4	1.52		16.3	15.3	1.64		19.3	18	1.74		20.6	18.6	1.61		17.5	17.3	1.3		17.9	17.9	1.3		19.1	19.1	1.21		23.2	23.2	1.23

*. The kW values include the compressor, outdoor fan motor, and indoor blower motor. The kW from supplement heaters should be added to these values to obtain total system kilowatts.
†. The Btuh heating capacity values shown are net integrated values from which the defrost effect has been subtracted. The Btuh heating from supplement heaters should be added to those values to obtain total system capacity.
EDB - Entering Dry Bulb

NOTE: When the required data falls between the published data, interpolation may be performed. Extrapolation is not an acceptable practice.
EDB — Entering Dry Bulb

Manufacturer reserves the right to change, at any time, specifications and designs without notice and without obligations.

Guide specifications
General

AIR-COOLED, SPLIT-SYSTEM HEAT PUMP
Q5H9V
2 TO 5 NOMINAL TONS

System Description

Outdoor-mounted, air-cooled, split-system heat pump unit suitable for ground or rooftop installation. Unit consists of a hermetic compressor, an air-cooled coil, forward-swept blade propeller-type condenser fan, and a control box. Unit will discharge supply air upward as shown on contract drawings. Unit will be used in a refrigeration circuit to match up to a packaged fan coil or coil unit.

Quality Assurance

- Unit will be rated in accordance with the latest edition of AHRI Standard 240.
- Unit will be certified for capacity and efficiency, and listed in the latest AHRI directory.
- Unit construction will comply with latest edition of ASHRAE and with NEC.
- Unit will be constructed in accordance with UL standards and will carry the CSA label of approval. Unit will have CSA - C/US approval.
- Unit cabinet will be capable of withstanding Federal Test Method Standard No. 141 (Method 6061) 500-hr salt spray test.
- Air-cooled condenser coils are pressure tested and the outdoor units are leak tested.
- Unit constructed in ISO9001 approved facility.

Delivery, Storage, and Handling

- Unit will be shipped as single package only and is stored and handled per unit manufacturer's recommendations.

Warranty (for inclusion by specifying engineer)

- U.S. and Canada only.

PRODUCTS

Equipment

- Factory-assembled, single-piece, air-cooled heat pump. Contained within the unit enclosure is all factory wiring, piping, controls, compressor, refrigerant charge R-454B refrigerant, and special features required prior to field start-up.

Unit Cabinet

- Unit cabinet will be constructed of galvanized steel, bonderized, and coated with a powder coat paint.

Fans

- Condenser fan will be direct-drive propeller type, forward swept blade, discharging air upward.
- Condenser fan motors will be totally enclosed, 1-phase type with class B insulation and permanently lubricated.
- Fan blades will be statically and dynamically balanced.
- Condenser fan openings will be equipped with coated steel wire safety guards.

Compressor

- Compressor will be hermetically sealed.
- Compressor will be mounted on rubber vibration isolators.
- Compressor will be covered with a sound absorbing blanket.

Condenser Coil

- Condenser coil will be air cooled.
- Coil will be constructed of aluminum fins mechanically bonded to copper or aluminum tubes which are then cleaned, dehydrated, and sealed.

Refrigeration Components

- Refrigeration circuit components will include liquid-line and vapor line front-seating shutoff valve with provisions for sweat or mechanical connections, system charge of R-454B refrigerant, POE compressor oil, accumulator, electronic expansion valve, reversing valve, and pressure equalization valve.
- Unit will be equipped with high-pressure switch, suction and discharge pressure transducers, and filter drier for R-454B refrigerant.

Operating Characteristics

- The capacity of the unit will meet or exceed _____ Btuh at a suction temperature of _____ _F (_C). The power consumption at full load will not exceed _____ kW.
- Combination of the unit and the evaporator or fan coil unit will have a total net cooling capacity of _____ Btuh or greater at conditions of _____ CFM entering air temperature at the evaporator at _____ _F (_C) wet bulb and _____ °F (°C) dry bulb, and air entering the unit at _____ °F (°C).
- The system will have a SEER2 of _____ Btuh/watt or greater at DOE conditions.

Electrical Requirements

- Nominal unit electrical characteristics will be _____ v, single phase, 60 hz. The unit will be capable of satisfactory operation within voltage limits of _____ v to _____ v.
- Unit electrical power will be single point connection.
- Control circuit will be 24v.

Special Features

- Refer to section of this literature identifying accessories and descriptions for specific features and available enhancements.

System Design Summary

1. System must be installed with factory approved R454B Indoor unit only.
2. Factory authorized dissipation control board must be installed with indoor unit.
3. Intended for outdoor installation with free air inlet and outlet. Outdoor fan external static pressure available is less than 0.01-in. wc.
4. The maximum outdoor operating ambient in cooling mode is 125_F (51.7_C).
5. Minimum outdoor operating air temperature for heating mode is –10°F (–23.3°C).
6. For reliable operation, unit must be level in all horizontal planes.
7. For interconnecting refrigerant tube lengths greater than 80 ft (23.4 m) and/or elevation differences between indoor and outdoor units greater than 20 ft (6.1 m), consult Residential Piping and Long Line Guideline and Service Manual available from equipment distributor.
8. If any refrigerant tubing is buried, provide a 6 in. (152.4 mm) vertical rise to the valve connections at the unit. Refrigerant tubing lengths up to 36 in. (914.4 mm) may be buried without further consideration. Do not bury refrigerant lines longer than 36 in. (914.4 mm).
9. Use only copper wire for electrical connection at unit. Aluminum and clad aluminum are not acceptable for the type of connector provided.
10. Do not apply capillary tube indoor coils to these units.
11. Factory-supplied filter drier must be installed.
12. If national or local codes require a GFCI protective device, the use of an HF type GFCI device is **required**. A GFCI device not meeting HF requirements may result in excessive nuisance tripping and equipment shutdown.

© 2026 Carrier. All rights reserved.

Manufacturer reserves the right to change, at any time, specifications and designs without notice and without obligations.