25VNA
Infinity™ Variable Speed Heat Pump
with Greenspeed™ Intelligence
2 to 5 Nominal Tons

Carrier
turn to the experts

Installation Instructions

NOTE: Read the entire instruction manual before starting the installation.

Information in these installation instructions pertains only to 25VNA series units.

SAFETY CONSIDERATIONS

Improper installation, adjustment, alteration, service, maintenance, or use can cause explosion, fire, electrical shock, or other conditions which may cause death, personal injury, or property damage. Consult a qualified installer, service agency, or your distributor or branch for information or assistance. The qualified installer or agency must use factory-authorized kits or accessories when modifying this product. Refer to the individual instructions packaged with the kits or accessories when installing.

Follow all safety codes. Wear safety glasses, protective clothing, and work gloves. Use quenching cloth for brazing operations. Have fire extinguisher available. Read these instructions thoroughly and follow all warnings or cautions included in literature and attached to the unit. Consult local building codes and current editions of the National Electrical Code (NEC) NFPA 70. In Canada, refer to current editions of the Canadian electrical code CSA 22.1.

Recognize safety information. This is the safety-alert symbol ⚠ When you see this symbol on the unit and in instructions or manuals, be alert to the potential for personal injury. Understand these signal words; DANGER, WARNING, and CAUTION. These words are used with the safety-alert symbol. DANGER identifies the most serious hazards which **will** result in severe personal injury or death. WARNING signifies hazards which **could** result in personal injury or death. CAUTION is used to identify unsafe practices which **would** result in minor personal injury or product and property damage. NOTE is used to highlight suggestions which **will** result in enhanced installation, reliability, or operation.

⚠ CAUTION

CUT HAZARD

Failure to follow this caution may result in personal injury.

Sheet metal parts may have sharp edges or burrs. Use care and wear appropriate protective clothing and gloves when handling parts.

Indoor Thermostat Control Options

Model	Infinity Control
25VNA	Yes*

* Requires model SYSTXCCUID01–V or SYSTXCCUIZ01–V or newer.

⚠ WARNING

ELECTRICAL SHOCK HAZARD

Failure to follow this warning could result in personal injury or death.

Before installing, modifying, or servicing system, main electrical disconnect switch must be in the OFF position. There may be more than 1 disconnect switch. Lock out and tag switch with a suitable warning label.

⚠ WARNING

ELECTRICAL HAZARD - HIGH VOLTAGE!

Failure to follow this warning could result in personal injury or death.

Electrical components may hold charge. DO NOT remove control box cover for 2 minutes after power has been removed from unit.

PRIOR TO TOUCHING ELECTRICAL COMPONENTS:

Verify zero (0)voltage at inverter connections shown on inverter cover.

⚠ WARNING

UNIT OPERATION AND SAFETY HAZARD

Failure to follow this warning could result in personal injury or equipment damage.

Puron® refrigerant systems operate at higher pressures than standard R-22 systems. Do not use R-22 service equipment or components on Puron® refrigerant equipment.

Installation Instructions

In some cases noise in the living area has been traced to gas pulsations from improper installation of equipment.

1. Locate unit away from windows, patios, decks, etc. where unit operation sound may disturb customer.
2. Ensure that vapor and liquid tube diameters are appropriate for unit capacity.
3. Run refrigerant tubes as directly as possible by avoiding unnecessary turns and bends.
4. Leave some slack between structure and unit to absorb vibration.
5. When passing refrigerant tubes through the wall, seal opening with RTV or other pliable silicon-based caulk (see Fig. 1).
6. Avoid direct tubing contact with water pipes, duct work, floor joists, wall studs, floors, and walls.
7. Do not suspend refrigerant tubing from joists and studs with a rigid wire or strap which comes in direct contact with tubing (see Fig. 1).
8. Ensure that tubing insulation is pliable and completely surrounds vapor tube.
9. When necessary, use hanger straps which are 1 in. wide and conform to shape of tubing insulation. (See Fig. 1.)
10. Isolate hanger straps from insulation by using metal sleeves bent to conform to shape of insulation.

⚠ CAUTION

EQUIPMENT DAMAGE HAZARD

Failure to follow this caution may result in equipment damage.

If proper lineset routing techniques are not followed, variable speed systems can be susceptible to lineset transmitted noise inside the dwelling and, in extreme cases, tubing breakage.

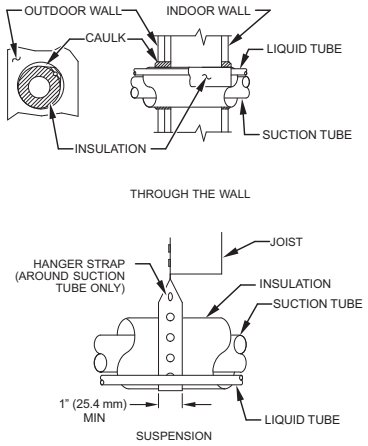

Fig. 1 - Connecting Tubing Installation

The outdoor unit contains the correct amount of refrigerant charge for operation with AHRI rated and factory-approved smallest indoor unit when connected by 15 ft (4.57 m) of field-supplied or factory accessory tubing.

Adjust refrigerant charge by adding or removing the charge to/from the unit depending on lineset length and indoor unit. Adjust by 0.6 oz/ft of actual lineset length. The user interface (UI) calculates required charge adjustment and total system charge required. For proper unit operation, check refrigerant charge using charging information in the Check Charge section of this instruction.

IMPORTANT: Liquid-line size is 3/8-in. OD for all 25VNA applications including long line applications.

IMPORTANT: Always install the factory-supplied liquid-line filter drier. Obtain replacement filter driers from your distributor or branch.

IMPORTANT: Always install the factory-supplied muffler (part #LM10KK003) on the vapor line as described in the *Factory Supplied Muffler Installation* section of these instructions. Obtain replacement mufflers from you distributor or branch.

Specifications for this unit in residential new construction market require the outdoor unit, indoor unit (including metering device), refrigerant tubing sets, and filter drier, and muffler listed in pre-sale literature. There can be no deviation. Consult the Service Manual – Air Conditioners and Heat Pumps Using Puron® Refrigerant to obtain required unit changes for specific applications and for R-22 retrofit.

Check Equipment and Job Site

Unpack Unit

Move to final location. Remove carton taking care not to damage unit.

Inspect Equipment

File claim with shipping company prior to installation if shipment is damaged or incomplete. Locate unit rating plate on unit corner panel. It contains information needed to properly install unit. Check rating plate to be sure unit matches job specifications.

Install on a Solid, Level Mounting Pad

If conditions or local codes require the unit be attached to pad, tie down bolts should be used and fastened through knockouts provided in unit base pan. Refer to unit mounting pattern in Fig. 2 to determine base pan size and knockout hole location.

For hurricane tie downs, contact distributor for details and PE (Professional Engineer) Certification, if required.

On rooftop applications, mount on level platform or frame. Place unit above a load-bearing wall and isolate unit and tubing set from structure. Arrange supporting members to adequately support unit and minimize transmission of vibration to building. Consult local codes governing rooftop applications.

Roof mounted units exposed to winds above 5 mph may require wind baffles. Consult the Service Manual - Residential Split System Air Conditioners and Heat Pumps Using Puron® Refrigerant for wind baffle construction.

NOTE: Unit must be level to within ±2° (±3/8 in./ft,±9.5 mm/m.) per compressor manufacturer specifications.

Clearance Requirements

When installing, allow sufficient space for airflow clearance, wiring, refrigerant piping, and service. Allow 24 in. (609.6 mm) clearance to service end of unit and 48 in. (1219.2 mm) (above unit. For proper airflow, a 6-in. (152.4 mm) clearance on 1 side of unit and 12-in. (304.8 mm) on all remaining sides must be maintained. Maintain a distance of 24 in. (609.6 mm) between units. Position so water, snow, or ice from roof or eaves cannot fall directly on unit.

On rooftop applications, locate unit at least 6 in. (152.4 mm) above roof surface.

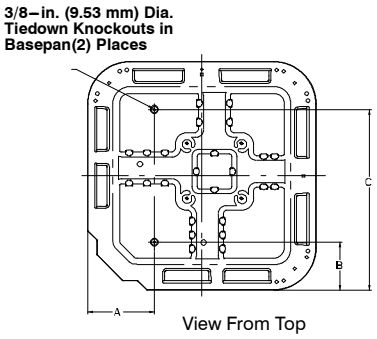

UNIT BASE PAN Dimension in. (mm)	TIEDOWN KNOCKOUT LOCATIONS in. (mm)		
	A	B	C
35 X 35 (889 X 889)	9–1/8 (231.8)	6–9/16 (166.7)	28–7/16 (722.3)

Fig. 2 - Tiedown Knockout Locations

Operating Ambient

The minimum outdoor operating ambient in cooling mode is 55°F (12.78°C) without low ambient cooling enabled, and the maximum outdoor operating ambient in cooling mode is 125°F (51.67°C).

Elevate Unit

Elevate unit per local climate and code requirements to provide clearance above estimated snowfall level and ensure adequate drainage of unit.

⚠ CAUTION

UNIT OPERATION HAZARD

Failure to follow this caution may result in equipment damage or improper operation.

Do not allow water and/or ice to build up in base pan.

⚠ CAUTION

UNIT OPERATION HAZARD

Failure to follow this caution may result in equipment damage or improper operation.

Locate the unit in such a way that it is stable in all circumstances including adverse weather conditions.

In Long-Line Applications, Install Liquid-Line Solenoid Valve (LSV)

For refrigerant piping arrangements with equivalent lengths greater than 80 ft. (24.38 m) and/or when elevation difference between indoor and outdoor unit is greater than ±20 ft. (±6.10 m), follow all requirements of the Residential Piping and Long-Line Guideline. If required by Long-Line Guideline, install LSV kit, part no. KHALS0401LLS, specifically designed for Puron® refrigerant heat pumps. LSV should be installed within 2 ft. (0.61 m) of outdoor unit with flow arrow pointing toward outdoor unit.

Make the necessary electrical connections as shown on Fig 16 and by following the Installation Instructions included with accessory kit.

IMPORTANT: Flow arrow must point toward outdoor unit.

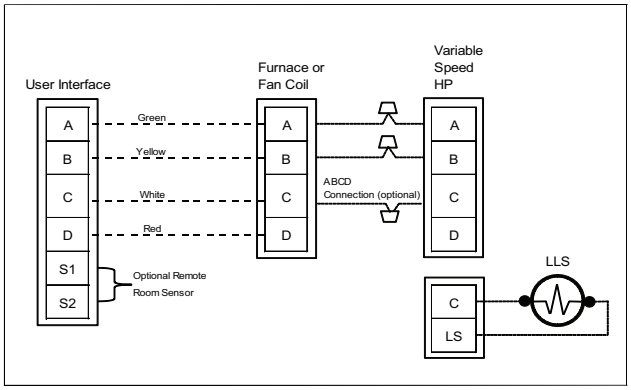

Fig. 3 - Liquid Line Solenoid Electrical Connection (Required for long line applications)

Make Piping Connections

⚠ WARNING

PERSONAL INJURY AND UNIT DAMAGE HAZARD

Failure to follow this warning could result in personal injury or death.

Relieve pressure and recover all refrigerant before system repair or final unit disposal. Use all service ports and open all flow-control devices, including solenoid valves.

⚠ CAUTION

UNIT DAMAGE HAZARD

Failure to follow this caution may result in equipment damage or improper operation.

Do not leave system open to atmosphere any longer than minimum required for installation. POE oil in compressor is extremely susceptible to moisture absorption. Always keep ends of tubing sealed during installation.

⚠ CAUTION

UNIT DAMAGE HAZARD

Failure to follow this caution may result in equipment damage or improper operation.

If ANY refrigerant tubing is buried, provide a 6 in. (152.4 mm) vertical rise at service valve. Refrigerant tubing lengths up to 36 in. (914.4 mm) may be buried without further special consideration. Do not bury lines longer than 36 in. (914.4 mm).

Outdoor units may be connected to indoor section using accessory tubing package or field-supplied refrigerant grade tubing of correct size and condition. For tubing requirements beyond 80 ft. (24.38 m), substantial capacity and performance losses can occur. Following the recommendations in the Residential Piping and Long-Line Guideline will reduce these losses.

Refer to Table 1 for field tubing diameters. Refer to Table 2 for accessory requirements.

Table 1 – Refrigerant Connections and Recommended Liquid and Vapor Tube Diameters (in.)

UNIT SIZE	LIQUID		VAPOR*		
	Connection Diameter	Tube Diameter	Connection Diameter	Max (Rated) Diameter	Minimum Tube Diameter
25VNA024	3/8	3/8	7/8	7/8	5/8
25VNA036	3/8	3/8	7/8	7/8	5/8
25VNA048	3/8	3/8	7/8	1 – 1/8	3/4
25VNA060	3/8	3/8	7/8	1 – 1/8	3/4

* Units are rated with 25 ft. (7.6 m) of lineset. See Product Data sheet for performance data when using different size and length linesets.

Notes:
1. Do not apply capillary tube indoor coils to these units.
2. For Tubing Set lengths between 80 and 200 ft. (24.38 and 60.96 m) horizontal or 20 ft. (6.1 m) vertical differential, refer to the Residential Piping and Longline Guideline using Puron refrigerant.

Table 2 – Accessory Usage

ACCESSORY	REQUIRED FOR LOW – AMBIENT COOLING APPLICATIONS (Below 55°F/12.8°C)	REQUIRED FOR LONG LINE APPLICATIONS* (Over 80 ft/24.38 m)	REQUIRED FOR SEA COAST APPLICATIONS (Within 2 miles/3.22 km)	Installations with Radio Frequency Interference Concerns in the Range of 2 to 30 MHZ
Crankcase Heater	Standard	Standard	Standard	Standard
Evaporator Freeze Protection	Standard with Infinity™ Control	No	No	No
Liquid – Line Solenoid Valve	No	Yes	No	No
Low – Ambient Control	Standard with Infinity Control	No	No	No
Puron Refrigerant Balance Port Hard – ShutOff TXV	Yes†	Yes†	Yes†	Yes†
Support Feet	Recommended	No	Recommended	No
Winter Start Control	Standard with Infinity Control	Standard with Infinity Control	Standard with Infinity Control	Standard with Infinity Control
EMI Kit	No	No	No	Yes

* For tubing set lengths between 80 and 200 ft. (24.38 and 60.96 m) horizontal or 20 ft. (6.10 m) vertical differential (total equivalent length), refer to the Long Line Guideline—Air Conditioners and Heat Pumps using Puron® Refrigerant.

† Required on all indoor units. Standard on all new Puron refrigerant fan coils and furnace coils.

Standard = Standard for all new Puron refrigerant fan coils and furnace coils.

Outdoor Unit Connected to Factory-Approved Indoor Unit

Outdoor unit contains correct system refrigerant charge for operation with factory-approved, AHRI-rated indoor unit with highest sales volume when connected by 15 ft. (4.57 m) of field-supplied or factory-accessory tubing, and factory-supplied filter drier. Check refrigerant charge for maximum efficiency.

NOTE: If the indoor furnace coil width is more than the furnace casing width, refer to the indoor coil Installation Instructions for transition requirements.

Install Liquid-Line Filter Drier Indoor

Refer to Fig. 5 and install filter drier as follows:

1. Braze 5-in. (127 mm) liquid tube to the indoor coil.
2. Wrap filter drier with damp cloth.
3. Braze filter drier to above 5-in. (127 mm) liquid tube.
4. Connect and braze liquid refrigerant tube to the filter drier.

⚠ CAUTION

UNIT DAMAGE HAZARD

Failure to follow this caution may result in unit damage or improper operation.

Installation of filter drier in liquid line is required.

Factory Supplied Muffler (part # LM10KK003) Installation is Required On Every Installation:

- A muffler is required to reduce noise transmitted to indoor through the line set.
- Muffler may be installed in the vertical or the horizontal direction, maintaining at least 12 in. (304.8 mm) straight pipe length from the OD unit (See Fig 4).
- Maintain at least 12 in. (304.8 mm) to any bend from the muffler shell inlet and outlet stubs.

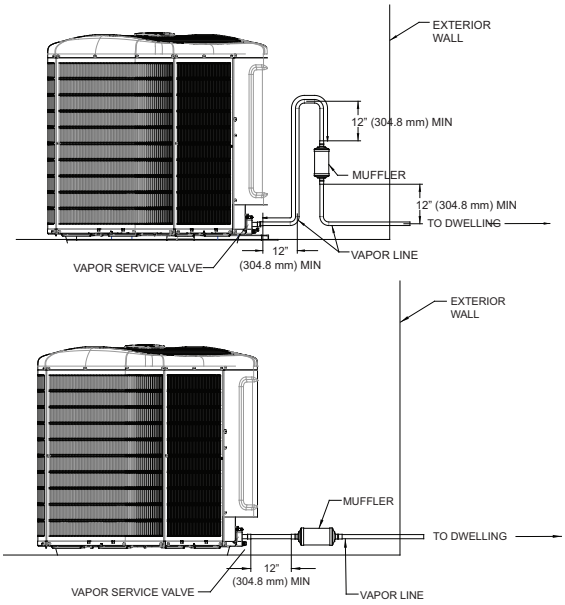

A11108

Fig. 4 - Muffler Installation

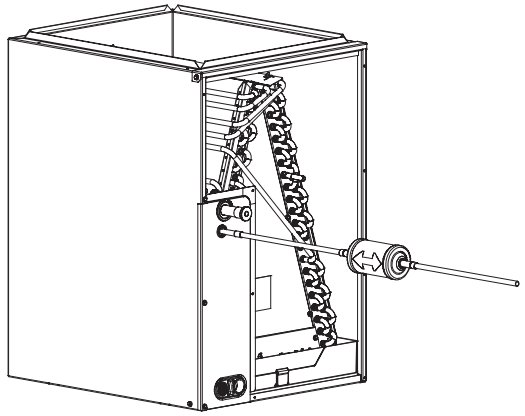

A05227

Fig. 5 - Liquid-Line Filter Drier

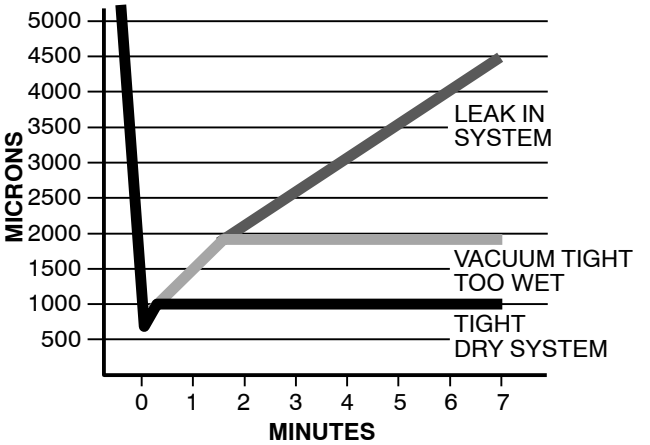

A95424

Fig. 6 - Deep Vacuum Graph

Refrigerant Tubing connection Outdoor

Connect vapor tube to fitting on outdoor unit vapor service valves (see Table 1).

NO Installation of Adapter Tube

Although it is a heat pump this unit has a standard AC liquid service valve. An EXV inside the unit serves as the heating expansion device.

Sweat Connections

⚠ CAUTION

UNIT DAMAGE HAZARD

Failure to follow this caution may result in equipment damage or improper operation.

- Use a brazing shield
- Wrap service valves with wet cloth or heat sink material.

Use refrigerant grade tubing. Service valves are closed from factory and ready for brazing. After wrapping service valve with a wet cloth, braze sweat connections using industry accepted methods and materials. Consult local code requirements. Refrigerant tubing and indoor coil are now ready for leak testing. This check should include all field and factory joints.

Evacuate Refrigerant Tubing and Indoor Coil

⚠ CAUTION

UNIT DAMAGE HAZARD

Failure to follow this caution may result in equipment damage or improper operation.

Never use the system compressor as a vacuum pump.

Refrigerant tubes and indoor coil should be evacuated using the recommended deep vacuum method of 500 microns. The alternate triple evacuation method may be used. See Service Manual for triple evacuation method. Always break a vacuum with dry nitrogen prior to opening the refrigerant system for servicing.

Deep Vacuum Method

The deep vacuum method requires a vacuum pump capable of pulling a vacuum of 500 microns and a vacuum gauge capable of accurately measuring this vacuum depth. The deep vacuum method is the most positive way of assuring a system is free of air and liquid water. (See Fig. 6)

Final Tubing Check

IMPORTANT: Check to be certain factory tubing on both indoor and outdoor unit has not shifted during shipment. Ensure tubes are not rubbing against each other or any sheet metal. Pay close attention to feeder tubes, making sure wire ties on feeder tubes are secure and tight.

Make Electrical Connections

⚠ WARNING

ELECTRICAL SHOCK HAZARD

Failure to follow this warning could result in personal injury or death.

Do not supply power to unit with compressor terminal box cover removed.

Be sure field wiring complies with local and national fire, safety, and electrical codes, and voltage to system is within limits shown on unit rating plate. Contact local power company for correction of improper voltage. See unit rating plate for recommended circuit protection device.

NOTE: Operation of unit on improper line voltage constitutes abuse and could affect unit reliability. See unit rating plate. Do not install unit in system where voltage may fluctuate above or below permissible limits.

NOTE: Use copper wire only between disconnect switch and unit.

NOTE: Install branch circuit disconnect of adequate size per NEC to handle unit starting current. Locate disconnect within sight from and readily accessible from unit, per Section 440-14 of NEC.

Route Ground and Power Wires

Remove access panel to gain access to unit wiring. Extend wires from disconnect through power wiring hole provided and into unit control box.

⚠ WARNING

ELECTRICAL SHOCK HAZARD

Failure to follow this warning could result in personal injury or death.

The unit cabinet must have an uninterrupted or unbroken ground to minimize personal injury if an electrical fault should occur. The ground may consist of electrical wire or metal conduit when installed in accordance with existing electrical codes.

Connect Ground and Power Wires

Connect ground wire to ground connection in control box for safety. Connect power wiring to contactor as shown in Fig. 7.

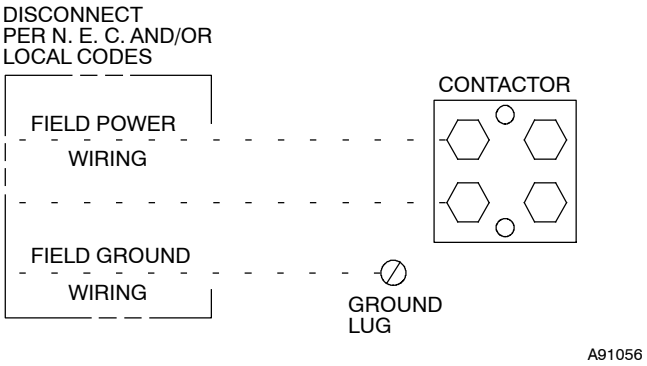

Fig. 7 - Line Power Connections

Connect Control Wiring

Connect to Infinity connections. Only two wires (AB) to Infinity capable indoor unit (furnace or fan coil) is required. Typical 4 wire (ABCD) may be connected (see Fig. 16).

General Information

Use No. 18 AWG color-coded, insulated (35°C minimum) wire for low voltage control wires.

All wiring must be NEC Class 1 and must be separated from incoming power leads.

Use furnace transformer, fan coil transformer, or accessory transformer for control power requirement of system accessories external to the OD unit. The outdoor unit has its own transformer power.

Final Wiring Check

IMPORTANT: Check factory wiring and field wire connections to ensure terminations are secured properly. Check wire routing to ensure wires are not in contact with tubing, sheet metal, etc.

Compressor Crankcase Heater

This compressor has an internal crankcase heater. Furnish power to the unit a minimum of 24 hr before starting the unit for the first time.

To furnish power to heater only, set thermostat to OFF and close electrical disconnect to outdoor unit.

Power is not required to the indoor unit or User Interface for proper operation of heater. Crankcase heater will however be intelligently energized as needed between operations when there is power to the unit. Crankcase heat will not be energized when there is no refrigerant in the system.

Airflow Setup for Infinity Control Furnace or FE Fan Coil (communicating)

This system can only be installed with Infinity indoor and user interface (UI) SYSTXCCUID01-V or SYSTXCCUIZ01-V or newer. When using an Infinity User Interface, airflow is automatically selected based on equipment size. The user has the option of selecting Comfort, Efficiency and Max airflow for Heating and/or Cooling modes. These should be selected based on balance between the homeowner's comfort and energy consumption expectations. See User Interface Installation Instructions for additional available adjustments.

Due to using a communicating control with the fan coil or the furnace, dip switch adjustments are not necessary. The outdoor unit configuration and the indoor airflows are determined by communicating control setup.

Install Accessories

There are no refrigeration circuit or electrical accessories required or available for installation within the unit. External to the unit, the same accessories such as the liquid line solenoid, support feet, snow rack, wind baffle etc., are available on other Carrier units can also be used on this line of product.

Start-Up

⚠ CAUTION

UNIT OPERATION AND SAFETY HAZARD

Failure to follow this caution may result in minor personal injury, equipment damage or improper operation.

Observe the following:

1. Do not overcharge system with refrigerant.
2. Do not operate unit in a vacuum or at negative pressure.
3. Do not disable low pressure switch
4. Dome temperatures may be hot.

⚠ CAUTION

PERSONAL INJURY HAZARD

Failure to follow this caution may result in personal injury.

Wear safety glasses, protective clothing, and gloves when handling refrigerant.

⚠ CAUTION

ENVIRONMENTAL HAZARD

Failure to follow this caution may result in environmental damage.

Federal regulations require that you do not vent refrigerant to the atmosphere. Recover during system repair or final unit disposal.

Follow these steps to properly start up the system:

1. After system is evacuated, close the disconnects to energize the ID and OD units to assess the user interface (UI), **Keep system in off mode**. Under the Advanced function menu, assess the REQUIRED CHARGE CALCULATION screen. Enter the lineset length and vapor tube diameter. The user interface (UI) will now display the required charge adjustment (see figure 8) for the lineset. Additional adjustment must be made for large indoor coils. See coil models and charge adjustments required in Table 3.
2. Add or remove the required charge adjustment for lineset length to liquid service valve. Note: If lineset is less than 15 feet, charge removal will be necessary.
3. Fully open liquid and vapor service valves.

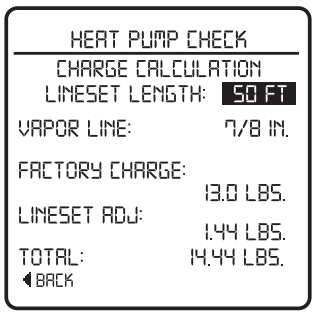

Fig. 8 - Required Charge Adjustment Calculated in UI

4. Set User Interface to operate cooling in CHARGING mode. Charging mode operates system compressor speed and fan speeds to proper conditions to check the refrigerant charge.

NOTE: Do not check charge in a mode other than CHARGING.

5. Wait for the specified stabilization time, depending on lineset length. Compare subcooling at liquid line service valve to Liquid Line Subcooling Target as shown CHARGING screen (LiqLin SC TGT) (see figure 9).

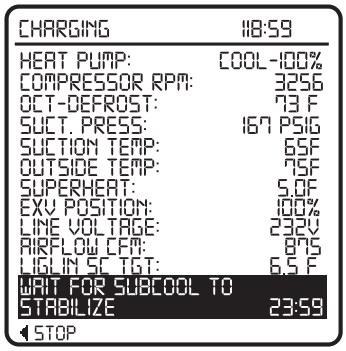

A11105

Fig. 9 - Liquid Line Subcooling Target

System Functions And Sequence Of Operation

The 25VNA models utilize an Infinity Communicating User Interface (UI). With a call for cooling, the outdoor fan and compressor are energized to run at lowest cooling demand. If this does not satisfy cooling demand, the system will ramp up in stages until it satisfies the demand. After the coping with the higher demand, the unit returns to lower capacity operation until the demand is satisfied or until an increase in demand.

When all demand is satisfied, the compressor will shut off. As the unit operates at lower capacity, system vapor (suction) pressure will be higher than it is during a standard single-stage system operation or during a higher capacity operation.

When the outdoor ambient is more the 100°F (37.8°C), the outdoor fan will continue to run for one minute after compressor shuts off. This reduces pressure differential for easier starting in the next cycle.

The conventional thermostat inputs is designed to work for emergency operation only. Inputs are LS, Y, O and C. The system will only operate at maximum capacity, heating or cooling.

The user interface (UI) displays the operation mode and fault codes as specified in the troubleshooting section. See Table 5 for codes and definitions.

NOTE: Only one code will be displayed on the outdoor unit control board (the most recent, with the highest priority). The latest codes are stored and can be access via the UI.

Crankcase Heater Operation

This unit has an internal crankcase heater that will be energized during the off cycle and is intelligently demanded by the system to prevent the compressor from being the coldest part of the system thus enhancing the reliability.

NOTE: Contactor may close intermittently without the unit starting. This is done to determine whether the control needs to energize the crankcase heater. Closing the contactor powers the inverter and allows the system check compressor temperature.

Outdoor Fan Motor Operation

The outdoor unit control (Fig. 10) energizes outdoor fan anytime compressor is operating, except for defrost and as needed during low-ambient cooling operation. The outdoor fan remains energized if a pressure switch opens or compressor scroll over temperature should occur. This OD fan is an ECM motor which operates at varying speeds depending on the ambient and the demand.

Time Delays

The unit time delays include:

- Five minute time delay to start cooling or heating operation when there is a call from the thermostat or user interface. To bypass this feature, momentarily short and release Forced Defrost pins.
- Five minute compressor re-cycle delay on return from a brown-out condition.

General Information

Infinity Controlled low ambient cooling:

This unit is capable of low ambient cooling down to 0°F (-17.8°C) with Low Ambient enabled on the Infinity Control. A low ambient kit is not required. The only accessory that may be required is wind baffles in locations which are likely to experience cross winds in excess of 5 miles an hour. This generally occurs only on roof and open area applications. The Infinity Control provides an automatic evaporator freeze thermostat. Low ambient cooling must be enabled in the User Interface setup. Fan may not begin to cycle until about 40°F (4.4°C) OAT. Fan will cycle based on coil and outdoor air temperature.

Infinity controlled low ambient mode operates as follows:

- Fan is OFF when outdoor coil temperature is too low (+ 55°F/12.7°C), the saturated suction pressure indicates a freezing indoor coil or outdoor fan has been ON for 30 minutes. (Fan is turned off to allow refrigerant system to stabilize.)

Communication and Status Function Lights

Infinity Control, Green Communications (COMM)Light

A green LED (**COMM light**) on the outdoor board (see Fig. 10) indicates successful communication with the other system products. The green LED will remain OFF until communication is established. Once a valid command is received, the green LED will turn ON continuously. If no communication is received within 2 minutes, the LED will be turned OFF until the next valid communication.

Amber Status Light

Amber colored **STATUS light** indicates operation and error status. See Table 6 for definitions.

- Two minute time delay to return to standby operation from last valid communication.
- One minute time delay of outdoor fan at termination of cooling mode when outdoor ambient is greater than or equal to 100°F (37.8°C).
- Fifteen second delay at termination of defrost before the auxiliary heat is de-energized.
- Twenty second delay at termination of defrost before the outdoor fan is energized (unless fan delay defeated).

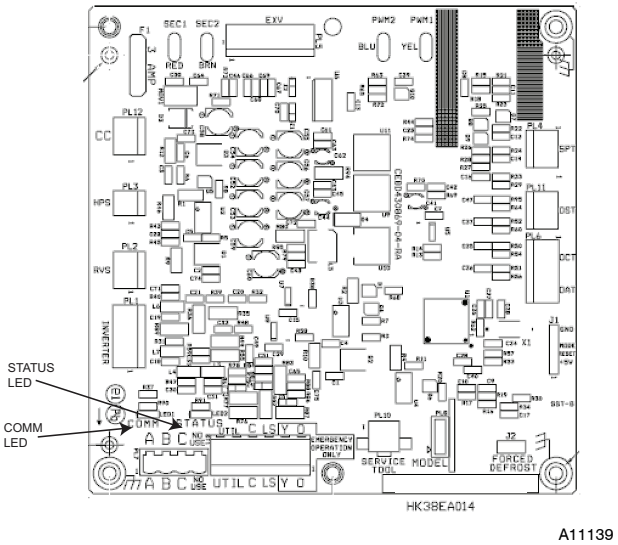

Fig. 10 – Variable Speed Control Board

- Fan is ON when outdoor coil temperature is too high (+80°F/26.7°C), the high side pressure is too high or if outdoor fan has been OFF for 30 minutes. (Fan is turned on to allow refrigerant system to stabilize)
- Low pressure indication by the suction pressure transducer is ignored for first 3 minutes during low ambient start up. After 3 minutes, if low pressure trip occurs, then outdoor fan motor is turned off for 10 minutes, with the compressor running. If pressure condition is satisfied within 10 minutes then cooling continues with the outdoor fan cycling per the coil temperature routine listed above for the remainder of the cooling cycle. If the suction pressure condition is not satisfied within 10 minutes, then the normal trip response (shut down cooling operation and generate LP trip error) will occur.

Defrost

This user interface (UI) offers 5 possible defrost interval times: 30, 60, 90, 120 minutes, or AUTO. The default is AUTO.

Defrost interval times: 30, 60, 90, and 120 minutes or AUTO are selected by the Infinity Control User Interface (dip switches are not used.)

AUTO defrost adjusts the defrost interval time based on the last defrost time as follows:

- When defrost time <3 minutes, the next defrost interval=120 minutes.
- When defrost time 3-5 minutes, the next defrost interval=90 minutes.
- When defrost time 5-7 minutes, the next defrost interval=60 minutes.
- When defrost time >7 minutes, the next defrost interval=30 minutes.

The control board accumulates compressor run time. As the accumulated run time approaches the selected defrost interval time, the control board monitors the coil temperature sensor for a defrost demand. If a defrost demand exists, a defrost cycle will be initiated at the end of the selected time interval. A defrost demand exists when the coil temperature is at or below 32°F (0°C) for 4 minutes during the interval. If the coil temperature does not reach 32°F (0°C) within the interval, the interval timer will be reset and start over.

- Upon initial power up the first defrost interval is defaulted to 30 minutes. Remaining intervals are at selected times.
- Defrost is only allowed to occur below 50°F (10°C) outdoor ambient temperature.

The defrost cycle is terminated when the coil temperature reaches 65°F (18.33°C) or 10 minutes has passed.

- When OAT is > 35°F (+1.67°C), defrost terminates if outdoor coil temperature > 50°F (+10°C).
- When OAT ≤ 35°F (+1.7°C), defrost will terminate if OCT is >45°F (+4.4°C).

At the defrost termination, the outdoor fan output (ODF) will turn on 15 seconds before the reversing valve switching.

Check Charge

Charge in CHARGING mode

Factory charge amount and desired subcooling are shown in the user interface (UI). To properly check or adjust charge, conditions must be favorable for subcooling charging in cooling mode. Favorable conditions exist when the outdoor temperature is between 65°F and 100°F (18°C and 38°C), and the indoor temperature is between 70°F and 80°F (21°C and 27°C). If the temperatures are outside of these ranges, weigh-in charge only. If confirmation is needed return and check subcooling when the temperatures are within the desired range.

Charging Procedure: Unit is factory charged for 15ft (4.57 m) of lineset. Charge is adjusted by adding or removing 0.6 oz/ft (17.74 g/m) of 3/8 liquid line above or below 15ft (4.57 m) respectively and indoor coil size. The amount for the lineset is calculated in the user interface under REQUIRED CHARGE CALCULATION screen. The lineset length and vapor line diameter must be entered correctly. The liquid line size must be 3/8" OD. If the liquid line and vapor line differ in length, use the liquid line length. Charge must be adjusted for large coils, see Table 3.

EXAMPLE:

To calculate additional charge required for a 25VNA048 with 25-ft. line set and CNPVP6024 indoor coil:

Since ID coil CNPV-6024 is listed in Table 3a, adjust by an additional 1 lb.

(25 ft. - 15 ft.) X 0.6 oz./ft. + (1 lb) x 16oz/lb = 22 oz.

A total of 22 oz of charge must be added, then fine adjust based on target subcooling listed on user interface (UI).

Table 3 – Large Coils – Charge Adjustment

25VNA	Fan Coils	Furnace Coils	Charge Adjust for ID Coil
060	FE4---006	CNP(H,V)-6124	+1 lb
048	FE4---005 FE4---006	CNP(H,V)-6124 CNP(H,V)-6024 CSPH-6012	+1 lb
036 024	FE4---005 FE4---006	CNP(H,V)-6124 CNP(H,V)-6024 CNPH-6012	+1.5 lb

NOTE: Adjust charge as indicated on systems with coils listed in Large Coil Table

Perform a final charge check only when in cooling and OD is between 65°F (18°C) and 100°F (38°C).

NOTE: UI indicates acceptable conditions if outside of this range. Do not charge if outside65°F (18°C) and 100°F (38°C) outdoor temperature.

If the range is acceptable, go the CHARGING screen in the user interface (UI). At cooling conditions, set the user interface (UI) to check the charge in cooling mode. Allow system to operate in cooling mode for the stabilization period as indicated in the user interface (UI). Once conditions are indicated as favorable and stable by the user interface (UI), check the system charge by subcooling method. Compare the subcooling taken at the liquid service valve to the subcooling target (LiqLin SC TGT) listed on the charging screen. Add refrigerant if the subcooling is low and remove charge if subcooling is high. Tolerance should be ±2°F.

If any adjustment is necessary, add or remove the charge slowly (no greater than 0.5 lb per minute) and allow system to operate for 15 minutes to stabilize before declaring a properly charged system.

The use of a commercial charge metering device (restrictor) such as **Imperial** liquid low side charger model 535-C or **Watsco** ChargeFaster model CH200 is recommended when adding refrigerant to an operating system. This prevents potential damage of liquid slugging of the compressor and allows the subcooling to stabilize quicker.

If the indoor temperature is above 80°F (26.67°C), and the outdoor temperature is in the favorable range, adjust system charge by weight based on line length and allow the indoor temperature to drop to 80°F (26.67°C) before attempting to check system charge by subcooling method as described above.

If the indoor temperature is below 70°F (21.11°C), or the outdoor temperature is not in the favorable range, adjust charge for line set length above or below 15ft (4.57 m) only. Charge level should then be appropriate for the system to achieve rated capacity. The charge level could then be checked at another time when the both indoor and outdoor temperatures are in a more favorable range. This ensures maximum efficiency and reliability.

Heating Check Chart Procedure

In heating mode, the required charging method is by weigh-in. On new installation or complete recharge, refer to the REQUIRED CHARGE CALCULATION screen in the user interface (UI) to obtain the required charge adjustment and/or total charge required.

Use the UI and Heating Check Charts (Figures 11 and 12) to check system operation during heating mode. The indoor conditions must be between 60°F (15.6°C) and 80°F (26.7°C) to check the charge. The outdoor coil must be dry and ice/frost free. Do not check for pressure agreement if the outdoor has rain, mist or snow present.

Use the Defrost CHECKOUT mode to remove ice or frost from coil, if present, prior to checking the heating pressures.

To use the Heating Check Chart, the user interface (UI) must be in CHARGING mode. These charts indicate whether a correct relationship exists between system operating pressure and air temperature entering indoor and outdoor units. If pressure and temperature do not match on chart, system refrigerant charge may not be correct. DO NOT USE CHART TO ADJUST REFRIGERANT CHARGE.

NOTE: High pressure is at vapor service valve. Add 12 psig if high pressure is taken from liquid service valve.

NOTE: When charging is necessary during heating season, charge must be weighed in accordance with unit rating plate, ±0.6 oz./ft (±17.74 g/m). of 3/8-in. liquid-line above or below 15 ft (4.57 m)., respectively.

NOTE: In heating mode, check refrigerant pressures only when user interface is in CHARGING mode and indicates stable. If charge is in doubt, remove charge and weigh-in correct calculated refrigerant charge.

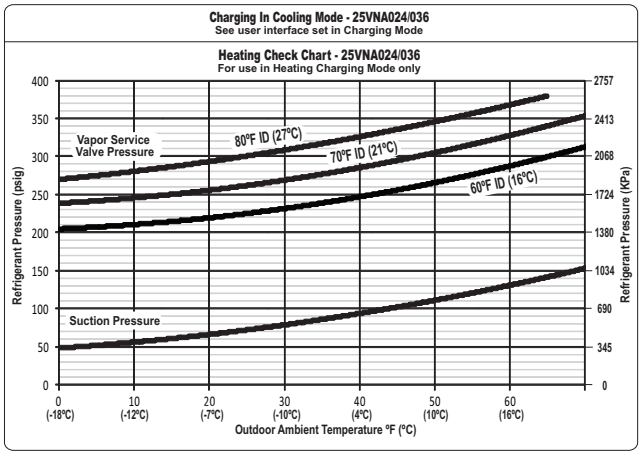

A11140

25VNA024/036 Heating Pressure check Chart (Psig)						
OD DB (°F)	Indoor Temperature (°F)					
	60		70		80	
	High	Low	High	Low	High	Low
60	324	121	360	120	407	121
50	293	99	333	100	300	102
40	277	87	307	80	360	88
30	257	69	288	65	333	69
20	242	57	281	60	320	60
10	232	50	263	47	306	50
0	218	42	253	43	288	42

Fig. 11 - Heating Pressure Check Chart 25VNA024/036

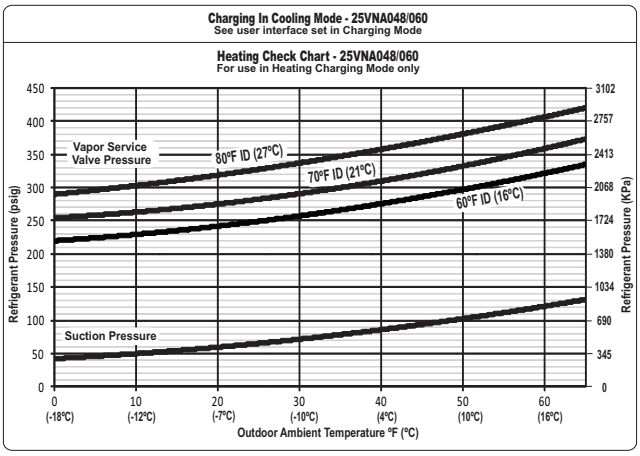

A11141

25VNA048/060 Heating Pressure check Chart (Psig)						
OD DB (°F)	Indoor Temperature (°F)					
	60		70		80	
	High	Low	High	Low	High	Low
60	324	121	360	120	407	121
50	293	99	333	100	380	102
40	277	87	307	80	360	88
30	257	69	288	65	333	69
20	242	57	281	60	320	60
10	232	50	263	47	306	50
0	218	42	253	43	288	42

Fig. 12 - Heating Pressure Check Chart 25VNA048/060

PUMPDOWN & EVACUATION:

If this system requires either a Pump Down or Evacuation for any reason, the procedures below must be followed:

Pump Down

Because this system has an EXV for the heating expansion device, conventional procedures cannot be used to "pump down" and isolate the refrigerant into the outdoor unit. The UI (User Interface) has provisions to assist in performing this function.

1. Connect gages to 25VNA liquid and vapor or suction capillary service ports to monitor operating pressures during and at completion of the procedure.
2. In the advanced menu of the UI, go to Heat Pump > Checkout > Pumpdown
3. Select mode to pump down in (COOL or HEAT), COOL mode allows refrigerant to be isolated in outdoor unit. HEAT mode allows the refrigerant to be isolated in indoor coil and lineset. Set desired time period. Default time period for the procedure is 120 minutes.
4. Select Start on UI to begin the pumpdown process. Unit will begin running in selected mode after a brief delay.
5. Close the liquid service valve.
6. The unit will run in selected mode with the low pressure protection set to indicate pumpdown is complete when the suction pressure drops below 0 psig. Compressor protections are still active to prevent damage to the compressor or inverter (high pressure, high current, high torque, scroll temperature, etc.) .
7. Once system indicates pumpdown complete or failure to complete shutdown, close vapor service valve.
8. If pumpdown does not complete due to compressor safety shutdown, a recovery system will be required to remove final quantity of refrigerant from indoor coil and line set.
9. Remove power from indoor and heat pump unit prior to servicing unit.

NOTE: A small quantity of charge remains in the OD unit that must be manually recovered if isolating refrigerant to indoor coil and lineset via HEAT mode PUMP DOWN.

Evacuation and Recovery of Refrigerant from within 25VNA

Because this system has an EXV for the heating expansion device, additional steps must be taken to open the EXV if the heat pump unit must be evacuated for service reasons. If the EXV is not open when pulling a vacuum or recovering refrigerant from the heat pump unit, extended evacuation time may be required and/or inadequate vacuum obtained. The UI (User Interface) has provisions to open the EXV for refrigerant recovery and/or evacuation.

1. Connect gages to 25VNA liquid and vapor or suction capillary service ports to monitor operating pressures during and at completion of the procedure. Attach recovery system or vacuum pump to gage set as needed for the service procedure. The service valves must be open to evacuate the unit through the line set service ports. The suction capillary service port is a direct connection to the suction port of the compressor.
2. In the advanced menu of the UI, go to HEAT PUMP > CHECKOUT > EVACUATION.
3. Set desired time period. Default time period for the procedure is 120 minutes.
4. Select START on UI to open the valve.
5. Begin evacuation or refrigerant recovery as required for the procedure after UI indicates the EXV is open. Power may be removed from heat pump after the UI indicates "READY TO EVACUATE."
6. Remove power from indoor and heat pump unit prior to servicing unit. The EXV will retain the open position.

NOTE: See service training materials for troubleshooting the EXV using EXV CHECK mode.

Major Components

Variable speed Control Board

The HP control board controls the following functions:

- Compressor speed
- Contactor operation
- Outdoor fan motor operation
- Reversing valve operation
- Defrost operation
- Low ambient cooling
- Crankcase heater operation
- Pressure switch monitoring
- Time Delays
- .Pressure Transducer
- .EXV operation control
- .Inverter communication and control

Inverter

The inverter is located inside the control box. This is an air-cooled device that communicates with the control board and drives the compressor to the demanded RPM. When the contactor closes, it powers the inverter with line voltage. The inverter changes the line voltage to 410 volts DC 3-phase, and varies the frequency to drive the compressor at the desired RPM.

NOTE: Manually closing the contactor will not cause the unit to operate. The unit must be operated with an Infinity Control. A standard thermostat will allow operation only in the emergency mode (high speed heating or cooling).

Variable Speed Compressor

This unit contains a variable speed compressor that has a wide operating range. It operates on 410vdc provided by the inverter. This compressor can only be operated by the specific inverter supplied with the unit.

⚠ CAUTION

EQUIPMENT DAMAGE HAZARD

Failure to follow this caution may result in equipment damage and/or improper operation.

Do not attempt to apply line voltage directly to the compressor. This will destroy the compressor.

Electronic Expansion Valve (EXV)

This unit uses an electronic expansion valve for refrigerant metering in the heating mode. The control board drives the EXV to its proper position based on the operating mode and conditions. The Infinity Control Service mode allows for manual opening and closing of the EXV for troubleshooting and pump down.

Field control Connections

Use the ABCD Infinity connections only. Only two wires, AB are required. See Fig. 16.

Compressor Internal Relief

This compressor is not protected by an internal pressure relief (IPR), instead, this protection is provided by the system high pressure switch and the compressor torque management through the inverter. The compressor is also protected by a scroll over-temperature protection.

Compressor Control Contactor

The contactor has a 24 volt coil. The electronic control board controls the operation of the contactor.

TROUBLESHOOTING

Systems Communication Failure

If communication with the Infinity control is lost with the User Interface (UI), the control will flash the appropriate fault code (see Table 6). Check the wiring to the User Interface and the indoor and outdoor units and power.

Model Plug

Each control board contains a model plug. The correct model plug must be installed for or the system to operate properly (see Table 4).

Table 4 – Model Plug Information

MODEL NUMBER	MODEL PLUG NUMBER	PIN RESISTANCE (K–ohms)	
		Pins 1–4	Pins 2–3
25VNA024	HK70EZ001	5.1K	11K
25VNA036	HK70EZ002	5.1K	18K
25VNA048	HK70EZ003	5.1K	24K
25VNA060	HK70EZ004	5.1K	33K

The model plug is used to identify the type and size of unit to the control.

On new units, the model and serial numbers are input into the board's memory at the factory. If a model plug is lost or missing at initial installation, the unit will operate according to the information input at the factory and the appropriate error code will flash temporarily. An RCD replacement board contains no model and serial information. If the factory control board fails, the model plug must be transferred from the original board to the replacement board for the unit to operate.

NOTE: The model plug takes priority over factory model information input at the factory. If the model plug is removed after initial power up, the unit will operate according to the last valid model plug installed, and flash the appropriate fault code temporarily.

Pressure Switch Protection

The outdoor unit is equipped with high pressure switch. If the control senses the opening of a high pressure switch, it will respond as follows:

1. De-energize the compressor contactor.
2. Keep the outdoor fan operating for 15 minutes.
3. Display the appropriate fault code (see Table 6).
4. After a 15 minute delay, if there is a call for cooling or heating and HPS is reset, the compressor contactor is energized.
5. If HPS has not closed after a 15 minute delay, the outdoor fan is turned off. If the open switch closes anytime after the 15 minute delay, then resume operation with a call for cooling or heating at a temporary reduced capacity.
6. If HPS trips 3 consecutive cycles, the unit operation is locked out for 4 hours.
7. In the event of a high-pressure switch trip or high-pressure lockout, check the refrigerant charge, outdoor fan operation, and outdoor coil (in cooling) for airflow restrictions, or indoor airflow in heating.
8. In the event of a low-pressure trip or low-pressure lockout, check the refrigerant charge and indoor airflow (cooling) and outdoor fan operation and outdoor coil in heating.

Control Fault

If the outdoor unit control board has failed, the control will flash the appropriate fault code (see Table 6). The control board should be replaced.

Brown-Out Protection

If the line voltage is less than 187v for at least 4 seconds, the compressor contactor and fan relay are de-energized. Compressor and fan operation are not allowed until voltage is a minimum of 190v. The control will flash the appropriate fault code (see Table 6).

230V Line (Power Disconnect) Detection

If there is no 230v at the compressor contactor when the indoor unit is powered with a cooling or heating demand, the appropriate fault code is displayed. Verify the disconnect is closed and 230v wiring is connected to the unit.

Inverter Voltage Sensing

The control board senses the presence or absence of 230 V through the feedback from inverter. The control continuously monitors the high voltage to the inverter. Voltage should be present anytime the compressor contactor is energized and voltage should not be present when the contactor is de-energized.

Temperature Thermistors

Thermistors are electronic devices which sense temperature. As the temperature increases, the resistance decreases. Thermistors are used to sense outdoor air (OAT), coil temperature (OCT) and the suction line thermistor (OST) located between the reversing valve and the accumulator.

Refer to Table 5 for resistance values versus temperature.

Table 5 – Resistance Values versus Temperature

TEMPERATURE	RESISTANCE (ohms)
25.0° C (77.0° F)	10.0 + / - 2.3%
0.0° C (32.0° F)	32.6 + / - 3.2%
-28.0° C (-18.4° F)	85.5 + / - 3.4%

If the outdoor air or coil thermistor should fail, the control will flash the appropriate fault code (see Table 5.)

IMPORTANT: The outdoor air thermistor, coil thermistor and suction thermistor should be factory mounted in the final locations. **Check to ensure thermistors are mounted properly (figures 13, 14 and 15).**

Thermistor Sensor Comparison

The control continuously monitors and compares the outdoor air temperature sensor and outdoor coil temperature sensor to ensure proper operating conditions. The comparison is:

- In cooling if the outdoor air sensor indicates ≥ 10°F (≥ 5.6°C) warmer than the coil sensor (or) the outdoor air sensor indicates ≥ 20°F (≥ 11°C) cooler than the coil sensor, the sensors are out of range.
- In heating if the outdoor air sensor indicates ≥ 35°F (≥ 19.4°C) warmer than the coil sensor (or) the outdoor air sensor indicates ≥ 10°F (≥ 5.6°C) cooler than the coil sensor, the sensors are out of range.

If the sensors are out of range, the control will flash the appropriate fault code as shown in Table 6.

The thermistor comparisons are not performed during low ambient cooling or defrost operation.

Failed Thermistor Default Operation

Factory defaults have been provided in the event of failure of outdoor air thermistor (OAT) and/or outdoor coil thermistor (OCT).

If the OAT sensor should fail, low ambient cooling will not be allowed and the one-minute outdoor fan off delay will not occur. Defrost will be initiated based on coil temperature and time.

If the OCT sensor should fail, low ambient cooling will not be allowed. Defrost will occur at each time interval during heating operation, but will terminate after 5 minutes.

If there is a thermistor out-of-range error, defrost will occur at each time interval during heating operation, but will terminate after 5 minutes.

Count the number of short and long flashes to determine the appropriate flash code. Table 6 gives possible causes and actions related to each error.

Outdoor Coil Thermistor

The outdoor coil thermistor is a 10Kohm resistor used for multiple system operations. It provides the coil/liquid line temperature to the heat pump board and user interface. Low ambient operation, defrost initiation, defrost termination and assistance with OAT temperature measurement of some of the functions. The sensor must be securely mounted to the tube connecting the EXV and distributor. See figure 14 for proper placement. See table 5 for proper resistances.

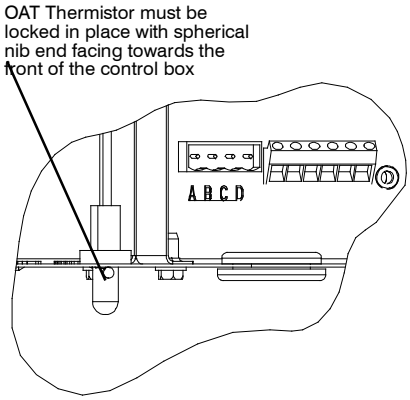

A11142

Fig. 13 - OAT Thermistor Location (Bottom of Control Box)

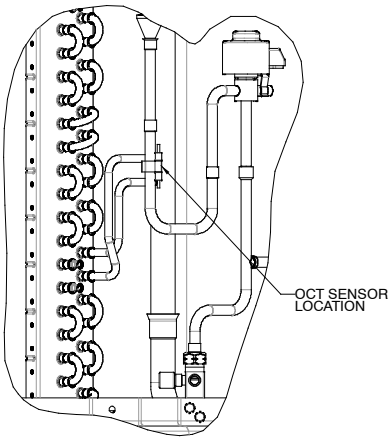

A11143

Fig. 14 - Outdoor Coil Thermistor (OCT) Attachment (On Distributor Tube)

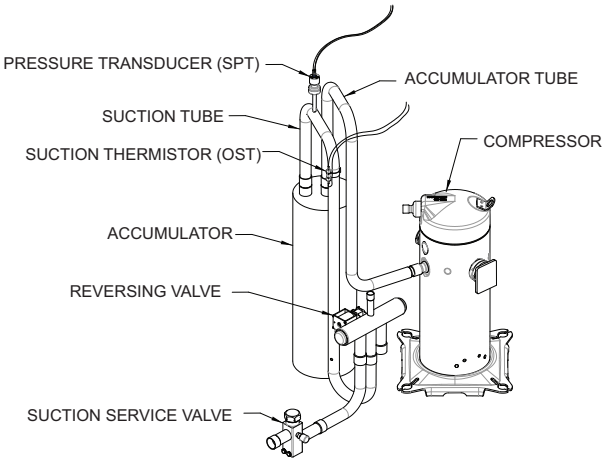

A11103

Fig. 15 - Suction Thermistor (OST) Attachment (On Suction Tube)

Suction Thermistor (OST)

Suction Thermistor is used for assisting in EXV control and must be secured on the suction tube and aligned longitudinally to the vertical surface of the tube axis (see Figure 15).

⚠ CAUTION

UNIT DAMAGE HAZARD

Failure to follow this caution may result in equipment damage or improper operation.

In order to minimize the ambient influence, make sure the thermistor curved surface hugs the pipe surface and is secured tight using the wire tie fished through the original slot insulating polymer body.

Status Codes

Table 6 shows the status codes flashed by the amber status light. Most system problems can be diagnosed by reading the status code as flashed by the amber status light on the control board.

The codes are flashed by a series of short and long flashes of the status light. The short flashes indicate the first digit in the status code, followed by long flashes indicating the second digit of the error code.

The short flash is 0.25 seconds ON and the long flash is 1.0 second ON. Time between flashes is 0.25 seconds. Time between short flash and first long flash is 1.0 second. Time between code repeating is 2.5 seconds with LED OFF.

Codes are easily read from user interface (UI)

EXAMPLE:

3 short flashes followed by 2 long flashes indicates a 32 code. Table 6 shows this to be low pressure switch open.

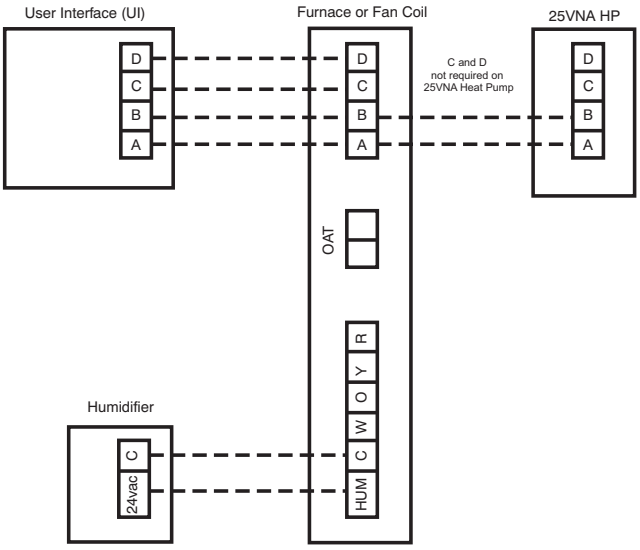

A11144

Fig. 16 - Fig. 16 - Infinity Furnace or Fan Coil Wiring with Communicating Variable speed HP

Table 6 – Troubleshooting

FAULT DESCRIPTION SENT TO UI	FLASH CODE (AMBER LED)	RESET TIME (minutes)
– –	Standby	ON, no flash
– –	Variable Capacity or Emergency Mode	1, pause
– –	Variable Speed Range Cutback	1 (2 sec ON), longer pause (1 second OFF)
Communications Loss	16	NA
Invalid Model	25	NA
High Pressure Switch Open	31	15
Low Pressure Trip	32	15
Control Fault	45	NA
Brownout	46	Revert to 5 min cycle delay
Lost Inverter Communications	48	Revert to 5 min cycle delay
230VAC Dropout–Reset Event	49	Revert to 5 min cycle delay
Outdoor Air Temp Sensor Fault	53	NA
Suction Temp Sensor Fault	54	15
Coil Temp Sensor Fault	55	NA
OAT–OCT Thermistor Out of range	56	NA
Suction Pressure Sensor Fault	57	15
OAT–OST Thermistor Out of range	58	5
Compressor Scroll Temp Out of Range	59	15
Compressor Sump Heating Active	68	2 HOURS
Inverter / Compressor Internal Fault	69	15
Compressor Motor Temp Out of Range	71	15
Suction Over Temperature	72	15
Inverter Temp Out of Range Event	75	15
Inverter Over Current	77	15
Compressor No–Pump Event	79	15
Suction Over Temp Lockout	82	4 Hours
Low Pressure Lockout for 4 hours	83	4 HOURS
High Pressure Lockout for 4 hours	84	4 HOURS
Compressor Temp Lockout	85	4 HOURS
Compressor Temp Sensor Fault	86	15
Inverter Temp Lockout	88	4 HOURS
Inverter VDC–Out Over Voltage	91	15
Inverter VDC–Out Under Voltage	92	15
230VAC Under Voltage	93	15
230VAC Over Voltage	94	15
High Current Lockout	95	2 HOURS
VDC Under Voltage Lockout	96	2 HOURS
VDC Over Voltage Lockout	97	2 HOURS
High Torque Event	98	10
High Torque Lockout	99	2 HOURS
– –	OFF	NA

FINAL CHECKS

IMPORTANT: IMPORTANT: Before leaving job, be sure to do the following:

1. Ensure that all wiring is routed away from tubing and sheet metal edges to prevent rub-through or wire pinching.
2. Ensure that all wiring and tubing is secure in unit before adding panels and covers. Securely fasten all panels and covers.
3. Tighten service valve stem caps to 1/12-turn past finger tight.
4. Leave Users Manual with owner. Explain system operation and periodic maintenance requirements outlined in manual.
5. Fill out Dealer Installation Checklist and place in customer file.

CARE AND MAINTENANCE

For continuing high performance and to minimize possible equipment failure, periodic maintenance must be performed on this equipment.

Frequency of maintenance may vary depending upon geographic areas, such as coastal applications. See Owner's Manual for information.

PURON® (R-410A) REFRIGERANT QUICK REFERENCE GUIDE

- Puron refrigerant operates at 50-70 percent higher pressures than R-22. Be sure that servicing equipment and replacement components are designed to operate with Puron refrigerant.
- Puron refrigerant cylinders are rose colored.
- Recovery cylinder service pressure rating must be 400 psig, DOT 4BA400 or DOT BW400.
- Puron refrigerant systems should be charged with liquid refrigerant. Use a commercial type metering device in the manifold hose when charging into suction line with compressor operating.
- Manifold sets should be 700 psig high side and 180 psig low side with 550 psig low-side retard.
- Use hoses with 700 psig service pressure rating.
- Leak detectors should be designed to detect HFC refrigerant.
- Puron refrigerant, as with other HFCs, is only compatible with POE oils.
- Vacuum pumps will not remove moisture from oil.
- Do not use liquid-line filter driers with rated working pressures less than 600 psig.
- Do not leave Puron refrigerant suction line filter driers in line longer than 72 hours.
- Do not install a suction-line filter drier in liquid-line.
- POE oils absorb moisture rapidly. Do not expose oil to atmosphere.
- POE oils may cause damage to certain plastics and roofing materials.
- Wrap all filter driers and service valves with wet cloth when brazing.
- A factory-approved liquid-line filter drier is required on every unit.
- Do NOT use an R-22 TXV.
- If indoor unit is equipped with an R-22 TXV or piston metering device, it must be changed to a hard-shutoff Puron refrigerant TXV.
- Never open system to atmosphere while it is under a vacuum.
- When system must be opened for service, recover refrigerant, evacuate then break vacuum with dry nitrogen and replace filter driers. Evacuate to 500 microns prior to recharging.
- Do not vent Puron refrigerant into the atmosphere.
- Do not use capillary tube coils.
- Observe all **warnings**, **cautions**, and **bold** text.
- All indoor coils must be installed with a hard-shutoff Puron refrigerant TXV metering device.

Copyright 2011 Carrier Corp. • 7310 W. Morris St. • Indianapolis, IN 46231 Printed in U.S.A. Edition Date: 04/11

Manufacturer reserves the right to change, at any time, specifications and designs without notice and without obligations.

Replaces: New