48TC*D
Nominal 15 to 25 Tons
with Puron® (R−410A) Refrigerant

Carrier
turn to the experts

Service and Maintenance Instructions

This Service and Maintenance Manual supplements the basic unit instruction manual (which addressed the mechanical installation of the unit only). Start-up procedures, checklists and operating sequences are included in this manual.

IMPORTANT: Leave a copy of this manual with owner/operator for future reference. Additional copies may be downloaded from *HVACpartners.com*.

TABLE OF CONTENTS

SAFETY CONSIDERATIONS 1
UNIT ARRANGEMENT AND ACCESS 2
SUPPLY FAN (BLOWER) SECTION 4
COOLING 6
PURON® (R-410A) REFRIGERANT 8
COOLING CHARGING CHARTS 10
CONVENIENCE OUTLETS 15
SMOKE DETECTORS 17
PROTECTIVE DEVICES 23
GAS HEATING SYSTEM 25
CONDENSER COIL SERVICE 36
PREMIERLINK™ CONTROL 37
RTU-MP CONTROL SYSTEM 45
ECONOMI$ER SYSTEMS 58
WIRING DIAGRAMS 66
PRE-START-UP 71
START-UP, GENERAL 71
START-UP, PREMIERLINK CONTROLS 73
START-UP, RTU-MP CONTROL 74
OPERATING SEQUENCES 77
FASTENER TORQUE VALUES 88
APPENDIX I. MODEL NUMBER SIGNIFICANCE . 89
APPENDIX II. PHYSICAL DATA 90
APPENDIX III. FAN PERFORMANCE 93
APPENDIX IV. WIRING DIAGRAM LIST 101
APPENDIX V. MOTORMASTER SENSOR LOCATIONS 102
UNIT START-UP CHECKLIST 103

SAFETY CONSIDERATIONS

Installation and servicing of air-conditioning equipment can be hazardous due to system pressure and electrical components. Only trained and qualified service personnel should install, repair, or service air-conditioning equipment. Untrained personnel can perform the basic maintenance functions of replacing filters. Trained service personnel should perform all other operations.

When working on air-conditioning equipment, observe precautions in the literature, tags and labels attached to the unit, and other safety precautions that may apply. Follow all safety codes. Wear safety glasses and work gloves. Use quenching cloth for unbrazing operations. Have fire extinguishers available for all brazing operations.

Follow all safety codes. Wear safety glasses and work gloves. Use quenching cloth for brazing operations. Have fire extinguisher available. Read these instructions thoroughly and follow all warnings or cautions attached to the unit. Consult local building codes and National Electrical Code (NEC) for special requirements.

Recognize safety information. This is the safety-alert symbol ⚠. When you see this symbol on the unit and in instructions or manuals, be alert to the potential for personal injury.

Copyright 2010 Carrier Corp. • 7310 W. Morris St. • Indianapolis, IN 46231
Printed in U.S.A. Edition Date: 3/10 **Catalog No: 48TC-04SM**

Manufacturer reserves the right to change, at any time, specifications and designs without notice and without obligations.
Replaces: NEW

Understand the signal words DANGER, WARNING, and CAUTION. These words are used with the safety-alert symbol. DANGER identifies the most serious hazards which **will** result in severe personal injury or death. WARNING signifies a hazard which **could** result in personal injury or death. CAUTION is used to identify unsafe practices which **may** result in minor personal injury or product and property damage. NOTE is used to highlight suggestions which **will** result in enhanced installation, reliability, or operation.

48TC

⚠ WARNING

FIRE, EXPLOSION HAZARD

Failure to follow this warning could result in personal injury, death and/or property damage.

Refer to the User's Information Manual provided with this unit for more details.

Do not store or use gasoline or other flammable vapors and liquids in the vicinity of this or any other appliance.

What to do if you smell gas:

DO NOT try to light any appliance.
DO NOT touch any electrical switch, or use any phone in your building.
IMMEDIATELY call your gas supplier from a neighbor's phone. Follow the gas supplier's instructions.
If you cannot reach your gas supplier, call the fire department.

⚠ WARNING

ELECTRICAL OPERATION HAZARD

Failure to follow this warning could result in personal injury or death.

Before performing service or maintenance operations on unit, turn off main power switch to unit. Electrical shock and rotating equipment could cause injury.

⚠ WARNING

ELECTRICAL OPERATION HAZARD

Failure to follow this warning could result in personal injury or death.

Units with convenience outlet circuits may use multiple disconnects. Check convenience outlet for power status before opening unit for service. Locate its disconnect switch, if appropriate, and open it. Tag-out this switch, if necessary.

⚠ WARNING

UNIT OPERATION AND SAFETY HAZARD

Failure to follow this warning could cause personal injury, death and/or equipment damage.

Puron® (R-410A) refrigerant systems operate at higher pressures than standard R-22 systems. Do not use R-22 service equipment or components on Puron® refrigerant equipment.

⚠ WARNING

FIRE, EXPLOSION HAZARD

Failure to follow this warning could result in personal injury or death.

Disconnect gas piping from unit when pressure testing at pressure greater than 0.5 psig. Pressures greater than 0.5 psig will cause gas valve damage resulting in hazardous condition. If gas valve is subjected to pressure greater than 0.5 psig, it *must* be replaced before use. When pressure testing field-supplied gas piping at pressures of 0.5 psig or less, a unit connected to such piping must be isolated by closing the manual gas valve(s).

⚠ CAUTION

CUT HAZARD

Failure to follow this caution may result in personal injury.

Sheet metal parts may have sharp edges or burrs. Use care and wear appropriate protective clothing, safety glasses and gloves when handling parts and servicing air conditioning units.

UNIT ARRANGEMENT AND ACCESS

General

Fig. 1 and Fig. 2 show general unit arrangement and access locations.

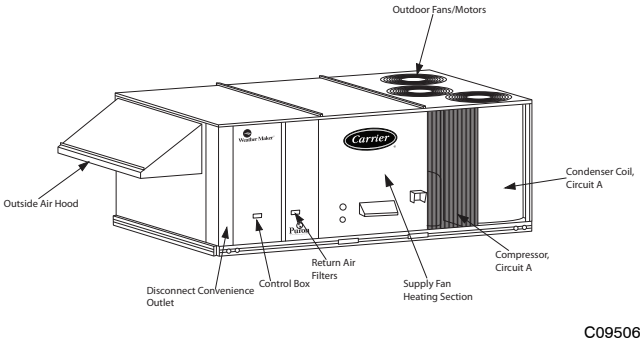

Fig. 1 - Access Panels and Components, Front

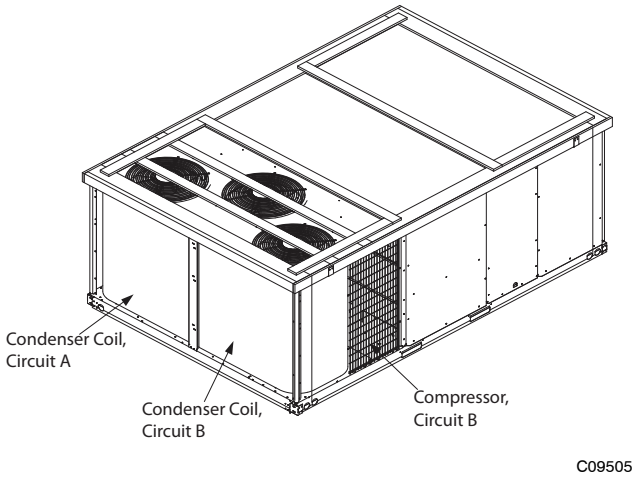

Fig. 2 - Typical Access Panel Location (Front)

Routine Maintenance

These items should be part of a routine maintenance program, to be checked every month or two, until a specific schedule for each can be identified for this installation:

Quarterly Inspection (and 30 days after initial start)

- Return air filter replacement
- Outdoor hood inlet filters cleaned
- Belt tension checked
- Belt condition checked
- Pulley alignment checked
- Fan shaft bearing locking collar tightness checked
- Condenser coil cleanliness checked
- Condensate drain checked

Seasonal Maintenance

These items should be checked at the beginning of each season (or more often if local conditions and usage patterns dictate):

Air Conditioning

- Condenser fan motor mounting bolts tightness
- Compressor mounting bolts
- Condenser fan blade positioning
- Control box cleanliness and wiring condition
- Wire terminal tightness
- Refrigerant charge level
- Evaporator coil cleaning
- Evaporator blower motor amperage

Heating

- Heat exchanger flue passageways cleanliness
- Gas burner condition
- Gas manifold pressure
- Heating temperature rise

Economizer or Outside Air Damper

- Inlet filters condition
- Check damper travel (economizer)
- Check gear and dampers for debris and dirt

Air Filters and Screens

Each unit is equipped with return air filters. If the unit has an economizer, it will also have an outside air screen. If a manual outside air damper is added, an inlet air screen will also be present.

Each of these filters and screens will need to be periodically replaced or cleaned.

Return Air Filters

Return air filters are disposable fiberglass media type. Access to the filters is through the vertical panel to the right of the control box. Filters are situated on slide out racks for easy inspection and repair. (See Fig. 1.)

To remove the filters:

1. Remove vertical filter access door.
2. Reach inside and extract the filters from the filter rack.
3. Replace these filters as required with similar replacement filters of same size.
4. Re-install filter access panel.

IMPORTANT: DO NOT OPERATE THE UNIT WITHOUT THESE FILTERS!

Outside Air Hood

Outside air hood inlet screens are permanent aluminum-mesh type filters. Check these for cleanliness. Remove the screens when cleaning is required. Clean by washing with hot low-pressure water and soft detergent and replace all screens before restarting the unit. Observe the flow direction arrows on the side of each filter frame.

Economizer and Manual Outside Air Screens

This air screen is retained by spring clips under the top edge of the hood. (See Fig. 3.)

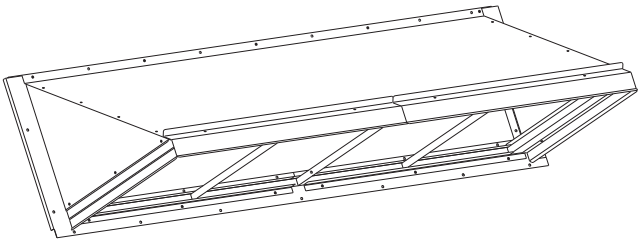

Fig. 3 - Filter Installation

To remove the filter, remove screws in horizontal filter retainers on leading edge of hood. Slide filters out.

To re-install filters, slide clean or new filters into hood side retainers. Once positioned, re-install horizontal filter retainer.

SUPPLY FAN (BLOWER) SECTION

⚠ WARNING

ELECTRICAL SHOCK HAZARD

Failure to follow this warning could cause personal injury or death.

Before performing service or maintenance operations on the fan system, shut off all unit power and tag-out the unit disconnect switch. Do not reach into the fan section with power still applied to unit.

Supply Fan Assembly

The supply fan system consists of two forward-curved centrifugal blower wheels mounted on a solid blower shaft that is supported by two greaseable pillow block concentric bearings. A fixed-pitch driven (fan) pulley is attached to the fan shaft and an adjustable-pitch driver pulley is mounted on the motor. The pulleys are connected using a "V" type belt. (See Fig. 4.)

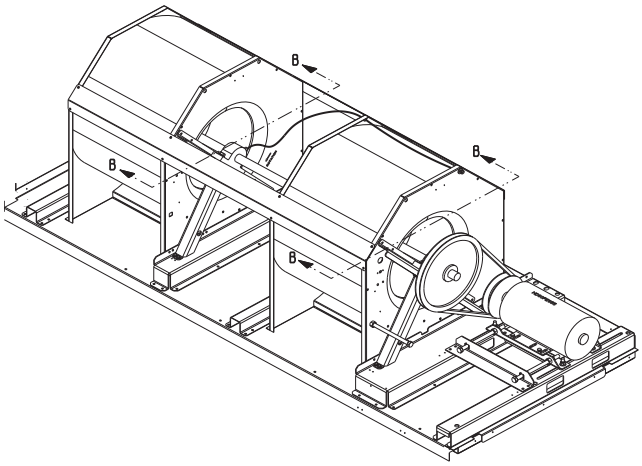

Fig. 4 - Belt Drive Motor Mounting

Belt

Check the belt condition and tension quarterly. Inspect the belt for signs of cracking, fraying or glazing along the inside surfaces. Check belt tension by using a spring-force tool (such as Browning's Part Number "Belt Tension Checker" or equivalent tool); tension should be between 5-10-lbs with 5/8-in. deflection when measured at the centerline of the belt span. This point is at the center of the belt when measuring the distance between the motor shaft and the blower shaft.

NOTE: Without the spring-tension tool, place a straight edge across the belt surface at the pulleys, then deflect the belt at mid-span using one finger to a 1/2-in. deflection.

Adjust the belt tension by loosening the four motor mounting nuts and bolts where the motor bolts to the blower rail. There are two jack bolts and nuts that are used to slide the motor plate to either increase or decrease belt tension. There are locking nuts on the jack bolts that need to be loosened at the motor plate. Turn the jack bolts clockwise or counter clockwise until the correct belt tension is achieved. Ensure the fan shaft and motor shaft are parallel prior to tightening motor plate nuts. (See Fig. 5.)

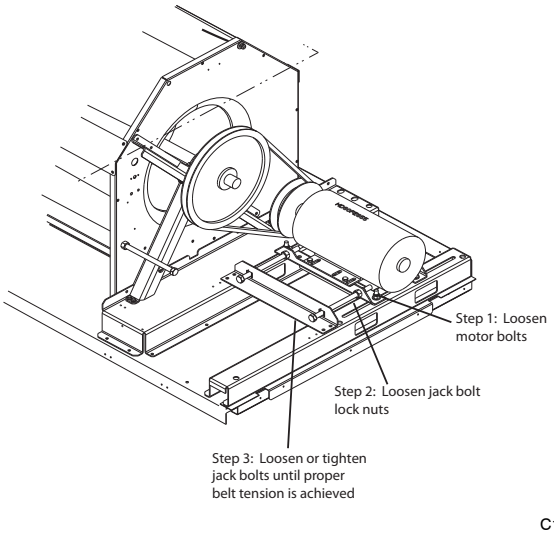

Fig. 5 - Adjusting Belt Tension

To replace the belt:

1. Use a belt with same section type or similar size. Do not substitute a "FHP" type belt. When installing the new belt, do not use a tool (screwdriver or pry-bar) to force the belt over the pulley flanges, this will stress the belt and cause a reduction in belt life.
2. Loosen the motor mounting plate front bolts and rear bolts.
3. Loosen the Jack bolt lock nuts and using the Jack bolts relieve the belt tension to allow easy removal of the belt by hand.
4. Remove the belt by gently lifting the old belt over one of the pulleys.
5. Install the new belt by gently sliding the belt over both pulleys, then using the Jack Bolts slide the motor plate away from the fan housing until proper belt tension is achieved.
6. Check the alignment of the pulleys, adjust if necessary.
7. Tighten all nuts to motor plate and Jack bolts.
8. Check the tension after a few hours of runtime and re-adjust as required.

Adjustable-Pitch Pulley on Motor

The motor pulley is an adjustable-pitch type that allows a servicer to implement changes in the fan wheel speed to match as-installed ductwork systems. The pulley consists of a fixed flange side that faces the motor (secured to the motor shaft) and a movable flange side that can be rotated around the fixed flange side that increases or reduces the pitch diameter of this driver pulley. (See Fig. 6.)

As the pitch diameter is changed by adjusting the position of the movable flange, the centerline on this pulley shifts laterally (along the motor shaft). This creates a requirement for a realignment of the pulleys after any adjustment of the movable flange. Also reset the belt tension after each realignment. The factory setting of the adjustable pulley is five (5) turns open from full closed.

Check the condition of the motor pulley for signs of wear. Glazing of the belt contact surfaces and erosion on these surfaces are signs of improper belt tension and/or belt slippage. Pulley replacement may be necessary.

To change fan speed:

1. Shut off unit power supply and install lock-out tag.
2. Loosen belt by loosening the motor adjustment bolts as described in the Belt Adjustment section above. (See Fig. 4.)
3. Loosen movable pulley flange setscrew. (See Fig. 6.)
4. Screw movable flange toward fixed flange to increase speed and away from fixed flange to decrease speed. Increasing fan speed increases load on motor. Do not exceed maximum fan speed in the Product Data or motor amperage as listed on the unit rating plate.
5. Set movable flange at nearest keyway or flat of pulley hub and tighten setscrew to torque specifications. Torque pulley set screw to 72 +/- 5 (in-lbs).

To align fan and motor pulleys:

1. Loosen fan pulley setscrews.
2. Slide fan pulley along fan shaft. Make angular alignment by loosening motor from mounting.
3. Tighten fan pulley setscrews and motor mounting bolts to torque specifications.
4. Recheck belt tension.

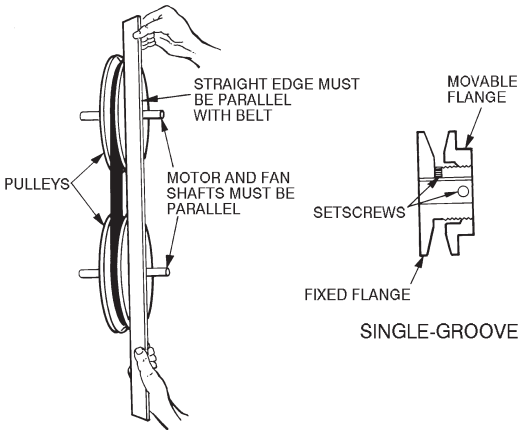

C07075

Fig. 6 - Supply-Fan Pulley Adjustment

48TC

Bearings

This fan system uses bearings featuring concentric split locking collars. The collars are tightened through a cap screw bridging the split portion of the collar. The cap screw has a Torx T25 socket head. To tighten the locking collar: Hold the locking collar tightly against the inner race of the bearing and torque the cap screw to 65-70 in-lb (7.4-7.9 Nm). (See Fig. 7.)

C08121

Fig. 7 - Tightening Locking Collar

Motor

When replacing the motor, also replace the external-tooth lock washer (star washer) under the motor mounting base; this is part of the motor grounding system. Ensure the teeth on the lock washer bite through and are in contact with the motor's painted base. Tighten motor mounting bolts to 120 +/- 12 in-lbs.

Changing Fan Wheel Speed by Changing Pulleys

The horsepower rating of the belt is primarily dictated by the pitch diameter of the smaller pulley in the drive system (typically the motor pulley in these units). Do not install a replacement motor pulley with a smaller pitch diameter than provided on the original factory pulley. Change fan wheel speed by changing the fixed sheave fan pulley (larger pitch diameter to reduce wheel speed, smaller pitch diameter to increase wheel speed) or select a new system (both pulleys and matching belt(s)).

Before changing pulleys to increase fan wheel speed, check the fan performance at the target speed and airflow rate to determine new motor loading (bhp). Use the fan performance tables or use the Packaged Rooftop Builder software program. Confirm that the motor in this unit is capable of operating at the new operating condition. Fan shaft loading increases dramatically as wheel speed is increased.

To reduce vibration, replace the motor's adjustable pitch pulley with a fixed pitch pulley (after the final airflow balance adjustment). This will reduce the amount of vibration generated by the motor/belt-drive system.

To determine variable pitch pulley diameter perform the following calculation:

1. Determine full open and full closed pulley diameter.
2. Subtract the full open diameter from the full closed diameter.
3. Divide that number by the number of pulley turns open from full closed
   This number is the change in pitch datum per turn open.

EXAMPLE
- Pulley dimensions 2.9 to 3.9 (full close to full open)
- 3.9 - 2.9 = 1
- 1 divided by 5 (turns from full close to full open)
- 0.2 change in pulley diameter per turn open
- 2.9 + 0.2 = 3.1" pulley diameter when pulley closed one turn from full open

COOLING

⚠ WARNING

UNIT OPERATION AND SAFETY HAZARD

Failure to follow this warning could cause personal injury, death and/or equipment damage.

This system uses Puron® refrigerant which has higher pressures than R-22 and other refrigerants. No other refrigerant may be used in this system. Gauge set, hoses, and recovery system must be designed to handle Puron refrigerant. If unsure about equipment, consult the equipment manufacturer.

Condenser Coil

The condenser coil is new NOVATION Heat Exchanger Technology. This is an all-aluminum construction with louvered fins over single-depth crosstubes. The crosstubes have multiple small passages through which the refrigerant passes from header to header on each end. Tubes and fins are both aluminum construction. Connection tube joints are copper. The coil may be one-row or two-row. Two-row coils are spaced apart to assist in cleaning.

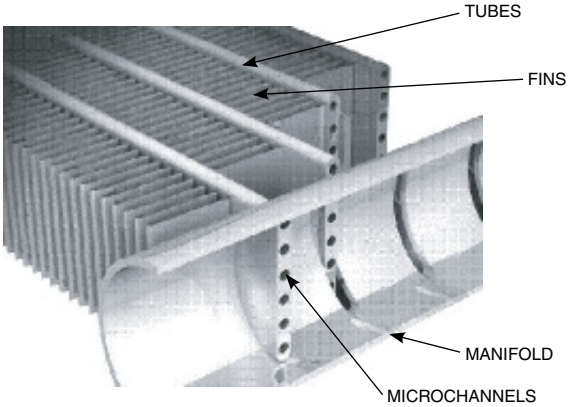

C07273

Fig. 8 - Microchannel Coils

Evaporator Coil

The evaporator coil is traditional round-tube, plate-fin technology. Tube and fin construction is of various optional materials and coatings (see Model Number Format). Coils are multiple-row. On two compressor units, the evaporator coil is a face split design, meaning the two refrigerant circuits are independent in the coil. The bottom portion of the coil will always be circuit A with the top of the coil being circuit B.

Coil Maintenance and Cleaning Recommendation

Routine cleaning of coil surfaces is essential to maintain proper operation of the unit. Elimination of contamination and removal of harmful residues will greatly increase the life of the coil and extend the life of the unit. The following maintenance and cleaning procedures are recommended as part of the routine maintenance activities to extend the life of the coil.

Remove Surface Loaded Fibers

Surface loaded fibers or dirt should be removed with a vacuum cleaner. If a vacuum cleaner is not available, a soft non-metallic bristle brush may be used. In either case, the tool should be applied in the direction of the fins. Coil surfaces can be easily damaged (fin edges can be easily bent over and damage to the coating of a protected coil) if the tool is applied across the fins.

NOTE: Use of a water stream, such as a garden hose, against a surface loaded coil will drive the fibers and dirt into the coil. This will make cleaning efforts more difficult. Surface loaded fibers must be completely removed prior to using low velocity clean water rinse.

Periodic Clean Water Rinse

A periodic clean water rinse is very beneficial for coils that are applied in coastal or industrial environments. However, it is very important that the water rinse is made with very low velocity water stream to avoid damaging the fin edges. Monthly cleaning as described is recommended.

Routine Cleaning of NOVATION Condenser Coil Surfaces

To clean the NOVATION condenser coil, chemicals are NOT to be used; only water is approved as the cleaning solution. Only clean potable water is authorized for cleaning NOVATION condensers. Carefully remove any foreign objects or debris attached to the coil face or trapped within the mounting frame and brackets. Using a high pressure water sprayer, purge any soap or industrial cleaners from hose and/or dilution tank prior to wetting the coil.

Clean condenser face by spraying the coil core steadily and uniformly from top to bottom, directing the spray straight into or toward the coil face. Do not exceed 900 psig or a 45 degree angle; nozzle must be at least 12 in. (30 cm) from the coil face. Reduce pressure and use caution to prevent damage to air centers (fins). Do not fracture the braze between air centers and refrigerant tubes. Allow water to drain from the coil core and check for refrigerant leaks prior to start-up.

NOTE: Please see the NOVATION Condenser Service section for specific information on the coil.

⚠ CAUTION

PERSONAL INJURY HAZARD

Failure to follow this caution may result in personal injury or equipment damage.

Chemical cleaning should NOT be used on the aluminum NOVATION condenser. Damage to the coil may occur. Only approved cleaning is recommended.

Routine Cleaning of Evaporator Coil Surfaces

Monthly cleaning with Totaline® environmentally sound coil cleaner is essential to extend the life of coils. This cleaner is available from Carrier Replacement parts division as part number P902-0301 for one gallon container, and part number P902-0305 for a 5 gallon container. It is recommended that all round tube coil cleaner as described below. Coil cleaning should be part of the unit's regularly scheduled maintenance procedures to ensure long life of the coil. Failure to clean the coils may result in reduced durability in the environment.

Avoid the use of

- coil brighteners
- acid cleaning prior to painting
- high pressure washers
- poor quality water for cleaning

Totaline environmentally sound coil cleaner is non-flammable, hypoallergenic, non-bacterial, and a USDA accepted biodegradable agent that will not harm coil or surrounding components such as electrical wiring, painted metal surfaces, or insulation. Use of non-recommended coil cleaners is strongly discouraged since coil and unit durability could be affected.

Totaline Environmentally Sound Coil Cleaner Application Equipment

- 2-1/2 gallon garden sprayer
- water rinse with low velocity spray nozzle

⚠ CAUTION

PERSONAL INJURY HAZARD

Failure to follow this caution may result in corrosion and damage to the unit.

Harsh chemicals, household bleach or acid or basic cleaners should not be used to clean outdoor or indoor coils of any kind. These cleaners can be very difficult to rinse out of the coil and can accelerate corrosion at the fin/tube interface where dissimilar materials are in contact. If there is dirt below the surface of the coil, use the Totaline environmentally sound coil cleaner as described above.

⚠ CAUTION

PERSONAL INJURY HAZARD

Failure to follow this caution may result in reduced unit performance.

High velocity water from a pressure washer, garden hose, or compressed air should never be used to clean a coil. The force of the water or air jet will bend the fin edges and increase airside pressure drop.

Totaline Environmentally Sound Coil Cleaner Application Instructions

1. Proper eye protection such as safety glasses, gloves and protective clothing are recommended during mixing and application.
2. Remove all surface loaded fibers and dirt with a vacuum cleaner as described above.
3. Thoroughly wet finned surfaces with clean water and a low velocity garden hose, being careful not to bend fins.
4. Mix Totaline environmentally sound coil cleaner in a 2-1/2 gallon garden sprayer according to the instructions included with the cleaner. The optimum solution temperature is 100°F (38°C).

NOTE: Do NOT USE water in excess of 130°F (54°C), as the enzymatic activity will be destroyed.

1. Thoroughly apply Totaline environmentally sound coil cleaner solution to all coil surfaces including finned area, tube sheets and coil headers.

2. Hold garden sprayer nozzle close to finned areas and apply cleaner with a vertical, up-and-down motion. Avoid spraying in horizontal pattern to minimize potential for fin damage.
3. Ensure cleaner thoroughly penetrates deep into finned areas.
4. Interior and exterior finned areas must be thoroughly cleaned.
5. Finned surfaces should remain wet with cleaning solution for 10 minutes.
6. Ensure surfaces are not allowed to dry before rinsing. Reapply cleaner as needed to ensure 10-minute saturation is achieved.
7. Thoroughly rinse all surfaces with low velocity clean water using downward rinsing motion of water spray nozzle. Protect fins from damage from the spray nozzle.

48TC

Evaporator Coil Metering Devices

The metering devices are multiple fixed-bore devices (Acutrol™) swaged into the horizontal outlet tubes from the liquid header, located at the entrance to each evaporator coil circuit path. These are non-adjustable. Service requires replacing the entire liquid header assembly.

To check for possible blockage of one or more of these metering devices, disconnect the supply fan contactor (IFC) coil, then start the compressor and observe the frosting pattern on the face of the evaporator coil. A frost pattern should develop uniformly across the face of the coil starting at each horizontal header tube. Failure to develop frost at an outlet tube can indicate a plugged or a missing orifice.

Refrigerant System Pressure Access Ports

There are two access ports in the system - on the suction tube near the compressor and on the discharge tube near the compressor. These are brass fittings with black plastic caps. The hose connection fittings are standard 1/4 SAE male flare couplings.

The brass fittings are two-piece High Flow valves, with a receptacle base brazed to the tubing and an integral spring-closed check valve core screwed into the base. (See Fig. 9.) This schrader valve is permanently assembled into the core body and cannot be serviced separately; replace the entire core body if necessary. Service tools are available from RCD (P920-0010) that allow the replacement of the schrader valve core without having to recover the entire system refrigerant charge. Apply compressor refrigerant oil to the schrader valve core's bottom O-ring. Install the fitting body with 96+/-10 in-lbs of torque; do not overtighten.

NOTE: The High Flow valve has a black plastic cap with a rubber o-ring located inside the cap. This rubber o-ring must be in place in the cap to prevent refrigerant leaks.

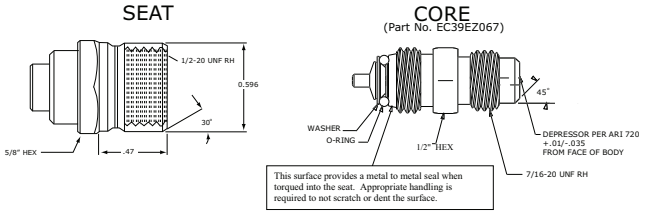

Fig. 9 - CoreMax Access Port Assembly

EXAMPLE:

Model 48TC*D28

Circuit A (from Fig. 14):

Outdoor Temperature . . . . . 85°F (29°C)

Suction Pressure . . . . . 125 psig (860 kPa)

Suction Temperature should be . . . . . 63°F (17°C)

Circuit B (from Fig. 15):

Outdoor Temperature . . . . . 85°F (29°C)

Suction Pressure . . . . . 120 psig (830 kPa)

Suction Temperature should be . . . . . 58°F (14°C)

PURON® (R-410A) REFRIGERANT

This unit is designed for use with Puron (R-410A) refrigerant. Do not use any other refrigerant in this system.

Puron (R-410A) refrigerant is provided in pink (rose) colored cylinders. These cylinders are available with and without dip tubes; cylinders with dip tubes will have a label indicating this feature. For a cylinder with a dip tube, place the cylinder in the upright position (access valve at the top) when adding liquid refrigerant for charging. For a cylinder without a dip tube, invert the cylinder (access valve on the bottom) when adding liquid refrigerant.

Because Puron (R-410A) refrigerant is a blend, it is strongly recommended that refrigerant always be removed from the cylinder as a liquid. Admit liquid refrigerant into the system in the discharge line when breaking refrigerant system vacuum while the compressor is OFF. Only add refrigerant (liquid) into the suction line while the compressor is operating. If adding refrigerant into the suction line, use a commercial metering/expansion device at the gauge manifold; remove liquid from the cylinder, pass it through the metering device at the gauge set and then pass it into the suction line as a vapor. Do not remove Puron (R-410A) refrigerant from the cylinder as a vapor.

Refrigerant Charge

Amount of refrigerant charge is listed on the unit's nameplate. Refer to Carrier GTAC2-5 Charging, Recovery, Recycling and Reclamation training manual and the following procedures.

Unit panels must be in place when unit is operating during the charging procedure. To prepare the unit for charge adjustment:

No Charge

Use standard evacuating techniques. Evacuate system down to 500 microns and let set for 10 minutes to determine if system has a refrigerant leak. If evacuation level raises to 1100 microns and stabilizes, the system has moisture in it and should be dehydrated per GTAC2-5 recommends.

If system continues to rise above 1100 microns, the system has a leak and should be pressurized and leak tested using appropriate techniques as explained in GTAC2-5. After evacuating system, weigh in the specified amount of refrigerant as listed on the unit rating plate.

Low-Charge Cooling

Using Cooling Charging Charts (Fig. 10, 11, 12, 13, 14 and 15), vary refrigerant until the conditions of the appropriate chart are met. Note the charging charts are different from the type normally used. Charts are based on charging the units to the correct superheat for the various operating conditions. Accurate pressure gauge and temperature sensing devices are required. Connect the pressure gauge to the service port on the suction line. Mount the temperature sensing device on the suction line and insulate it so that outdoor ambient temperature does not affect the reading. Indoor-air cfm must be within the normal operating range of the unit.

To Use Cooling Charging Charts

Select the appropriate unit charging chart from Fig. 10, 11, 12, 13, 14 and 15 .

- Sizes 17 - 24 contain two independent refrigerant circuits, Circuit A and Circuit B

Take the outdoor ambient temperature and read the suction pressure gauge. Refer to chart to determine what suction temperature should be. If suction temperature is high, add refrigerant. If suction temperature is low, carefully recover some of the charge. Recheck the suction pressure as charge is adjusted.

For 17-28 sizes, perform this procedure once for Circuit A (using the Circuit A chart) and once for Circuit B (using the Circuit B chart).

COOLING CHARGING CHARTS

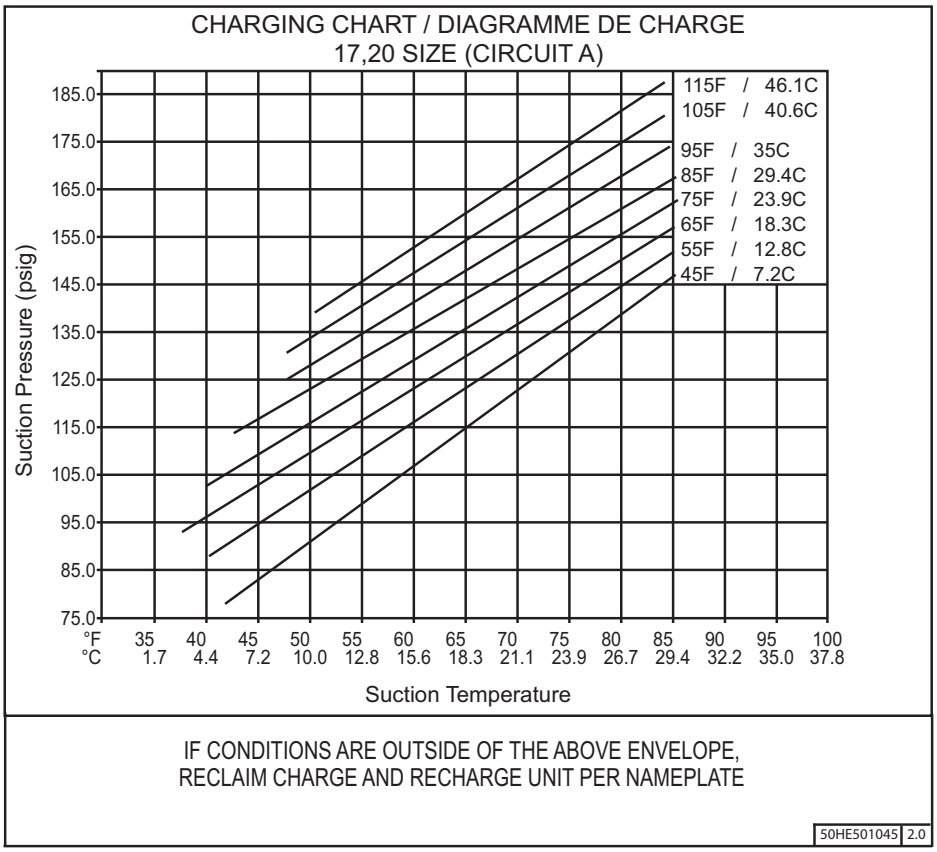

C09541

Fig. 10 - Cooling Charging Chart-D17, 20 Size (Circuit A)

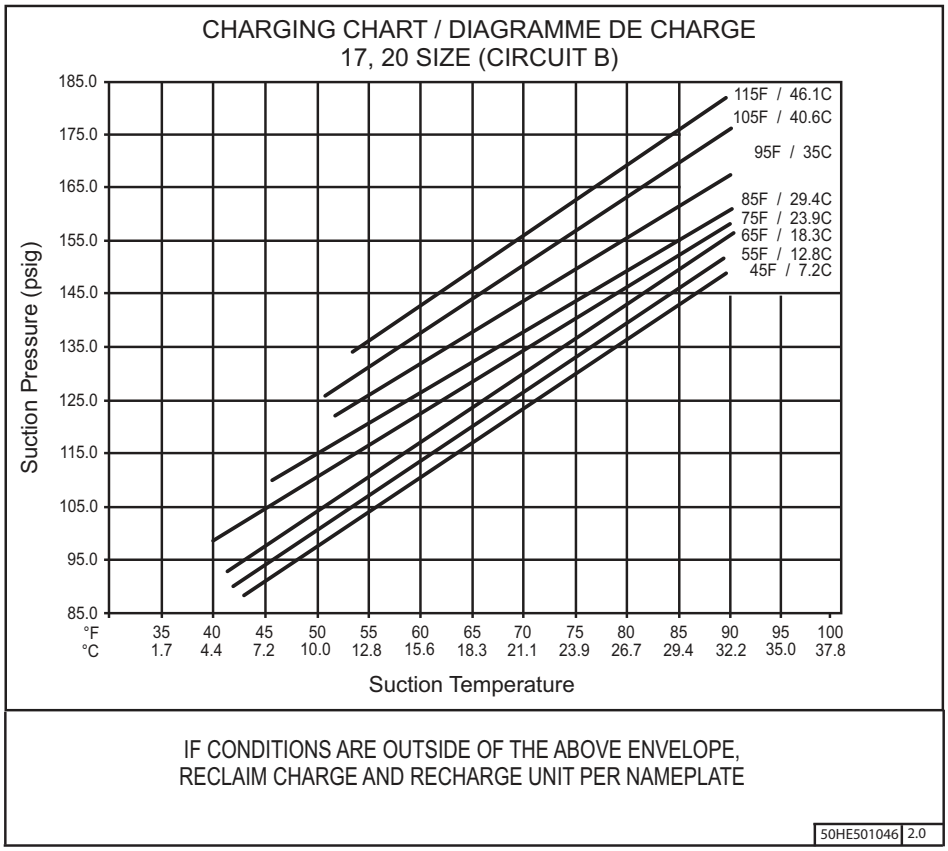

C09542

Fig. 11 - Cooling Charging Chart-D17, 20 Size (Circuit B)

COOLING CHARGING CHARTS

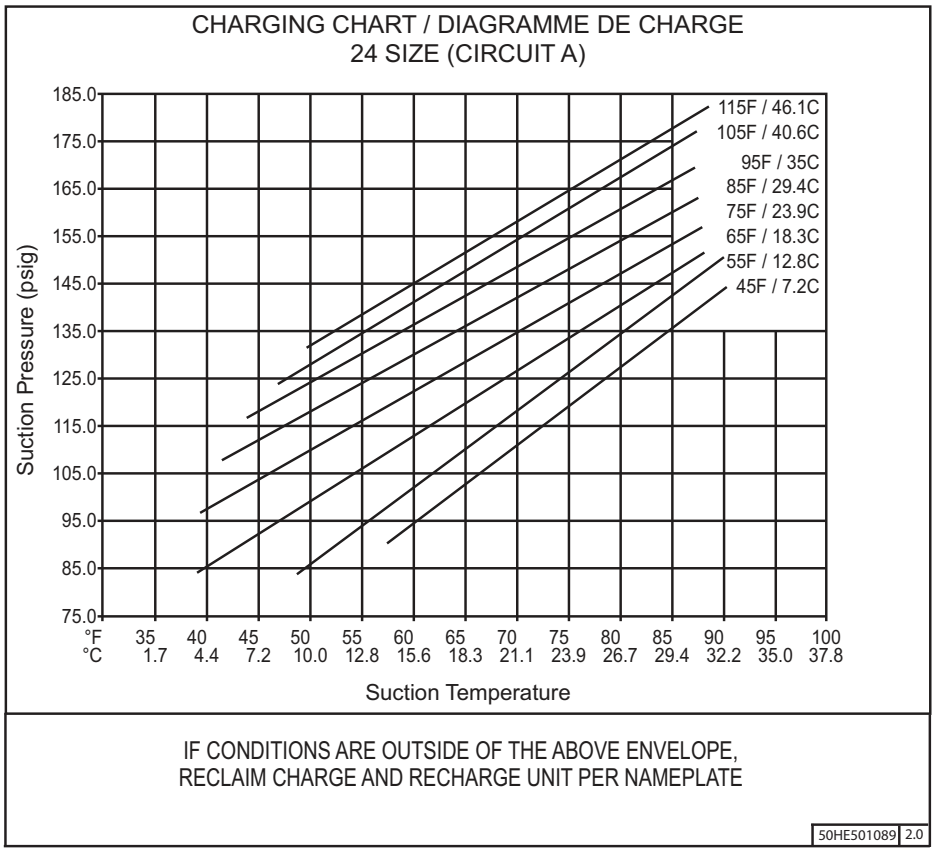

C09543

Fig. 12 - Cooling Charging Chart-D24 Size (Circuit A)

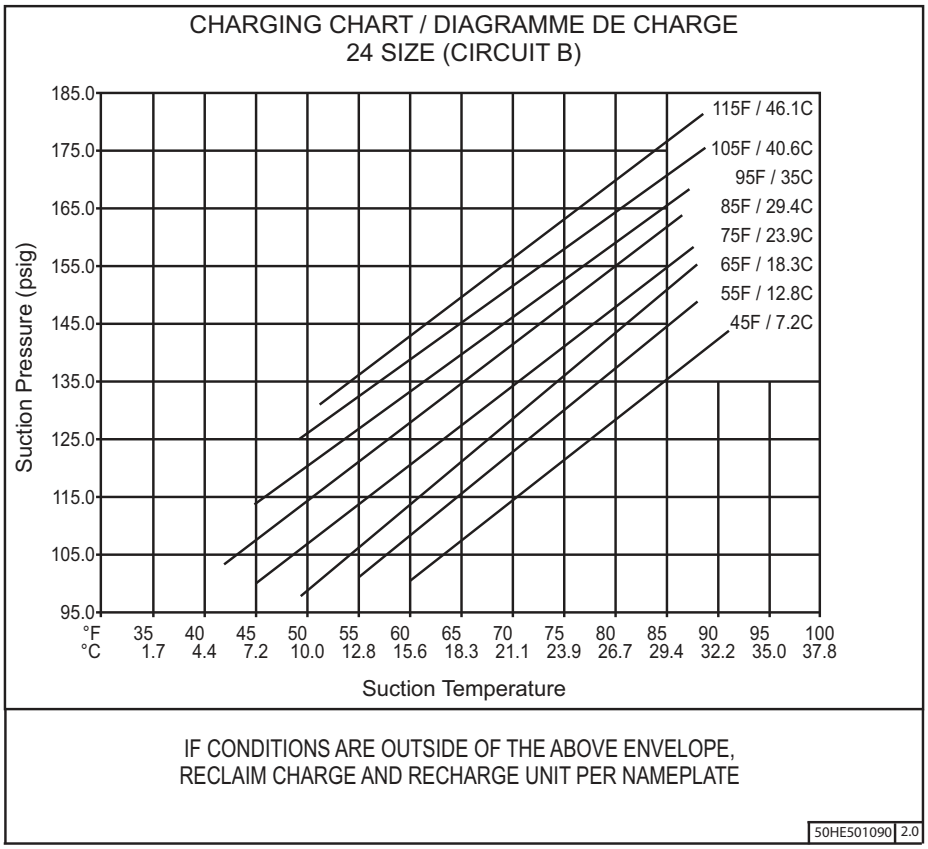

C09544

Fig. 13 - Cooling Charging Chart-D24 Size (Circuit B)

COOLING CHARGING CHARTS

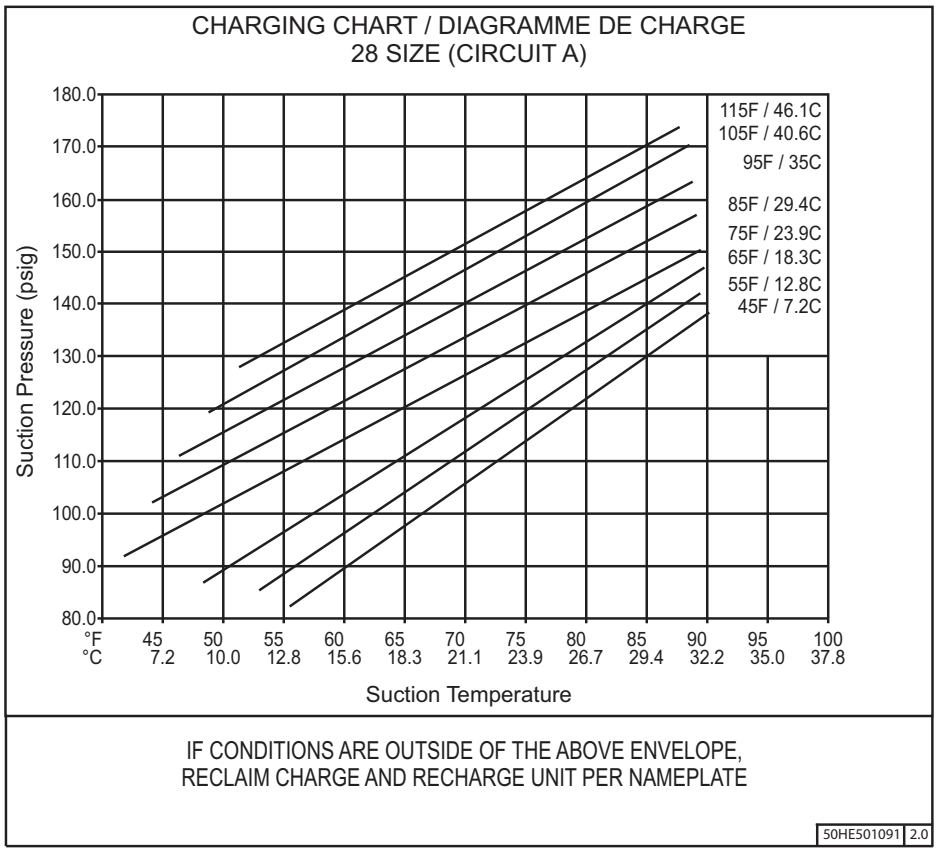

C09545

Fig. 14 - Cooling Charging Chart-D28 Size (Circuit A)

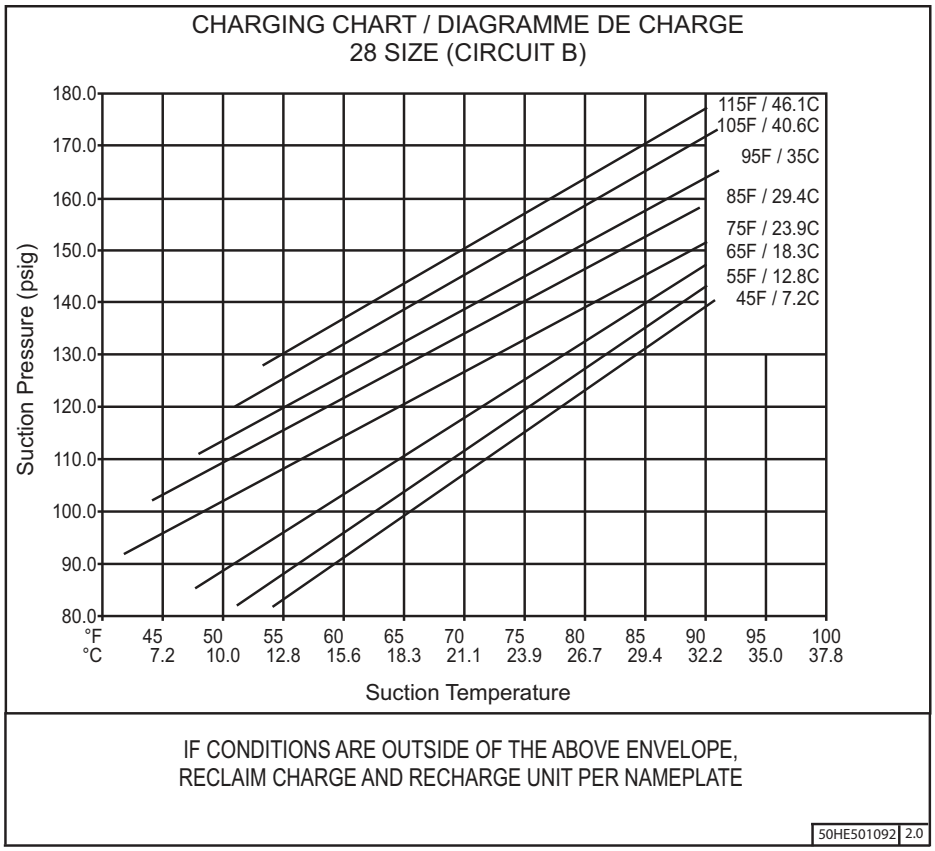

C09546

Fig. 15 - Cooling Charging Chart-D28 Size (Circuit B)

Table 1 – Cooling Service Analysis

PROBLEM	CAUSE	REMEDY
Compressor and Condenser Fan Will Not Start.	Power failure.	Call power company.
	Fuse blown or circuit breaker tripped.	Replace fuse or reset circuit breaker.
	Defective thermostat, contactor, transformer, or control relay.	Replace component.
	Insufficient line voltage.	Determine cause and correct.
	Incorrect or faulty wiring.	Check wiring diagram and rewire correctly.
	Thermostat setting too high.	Lower thermostat setting below room temperature.
Compressor Will Not Start But Condenser Fan Runs.	Faulty wiring or loose connections in compressor circuit.	Check wiring and repair or replace.
	Compressor motor burned out, seized, or internal overload open.	Determine cause. Replace compressor.
	Defective run/start capacitor, overload, start relay.	Determine cause and replace.
	One leg of three–phase power dead.	Replace fuse or reset circuit breaker. Determine cause.
Compressor Cycles (other than normally satisfying thermostat).	Refrigerant overcharge or undercharge.	Recover refrigerant, evacuate system, and recharge to nameplate.
	Defective compressor.	Replace and determine cause.
	Insufficient line voltage.	Determine cause and correct.
	Blocked condenser.	Determine cause and correct.
	Defective run/start capacitor, overload, or start relay.	Determine cause and replace.
	Defective thermostat.	Replace thermostat.
	Faulty condenser–fan motor or capacitor.	Replace.
	Restriction in refrigerant system.	Locate restriction and remove.
Compressor Operates Continuously.	Dirty air filter.	Replace filter.
	Unit undersized for load.	Decrease load or increase unit size.
	Thermostat set too low.	Reset thermostat.
	Low refrigerant charge.	Locate leak; repair and recharge.
	Leaking valves in compressor.	Replace compressor.
	Air in system.	Recover refrigerant, evacuate system, and recharge.
	Condenser coil dirty or restricted.	Clean coil or remove restriction.
Excessive Head Pressure.	Dirty air filter.	Replace filter.
	Dirty condenser coil.	Clean coil.
	Refrigerant overcharged.	Recover excess refrigerant.
	Air in system.	Recover refrigerant, evacuate system, and recharge.
	Condenser air restricted or air short–cycling.	Determine cause and correct.
Head Pressure Too Low.	Low refrigerant charge.	Check for leaks; repair and recharge.
	Compressor valves leaking.	Replace compressor.
	Restriction in liquid tube.	Remove restriction.
Excessive Suction Pressure.	High head load.	Check for source and eliminate.
	Compressor valves leaking.	Replace compressor.
	Refrigerant overcharged.	Recover excess refrigerant.
Suction Pressure Too Low.	Dirty air filter.	Replace filter.
	Low refrigerant charge.	Check for leaks; repair and recharge.
	Metering device or low side restricted.	Remove source of restriction.
	Insufficient evaporator airflow.	Increase air quantity. Check filter and replace if necessary.
	Temperature too low in conditioned area.	Reset thermostat.
	Outdoor ambient below 25° F.	Install low–ambient kit.
Evaporator Fan Will Not Shut Off.	Time off delay not finished.	Wait for 30–second off delay.
Compressor Makes Excessive Noise.	Compressor rotating in wrong direction.	Reverse the 3–phase power leads.

Compressors

Lubrication

Compressors are charged with the correct amount of oil at the factory.

⚠ CAUTION

UNIT DAMAGE HAZARD

Failure to follow this caution may result in damage to components.

The compressor is in a Puron® refrigerant system and uses a polyolester (POE) oil. This oil is extremely hygroscopic, meaning it absorbs water readily. POE oils can absorb 15 times as much water as other oils designed for HCFC and CFC refrigerants. Avoid exposure of the oil to the atmosphere.

⚠ WARNING

PERSONAL INJURY AND ENVIRONMENTAL HAZARD

Failure to follow this warning could result in personal injury or death.

Relieve pressure and recover all refrigerant before system repair or final unit disposal.

Wear safety glasses and gloves when handling refrigerants.

Keep torches and other ignition sources away from refrigerants and oils.

Replacing Compressor

The compressor used with Puron refrigerant contains a POE oil. This oil has a high affinity for moisture. Do not remove the compressor's tube plugs until ready to insert the unit suction and discharge tube ends.

1. Remove all sources of power to the unit. Install lock-out tag.
2. Recover refrigerant using environmentally friendly procedures.
3. Remove electrical wires from compressor terminal. Caution must be used when removing wires from compressor terminals. Use pliers, gloves, safety glasses and do not face directly towards the compressor terminals. Terminal blow out could occur.
4. With refrigerant completely recovered, open both sides of manifold gauge set. Refrigerant system should now be at ambient pressures.
5. Prior to applying heat and removing compressor, procure a wet quenching cloth and fire extinguisher.
6. Using torch, heat compressor discharge line and remove hot gas tube from compressor.
7. Using torch, heat compressor suction line and remove suction tube from compressor.
8. Remove system filter drier and replace with new.
9. Loosen four compressor retaining bolts and save components for installation of new compressor.
10. Using proper lifting techniques or devices, remove compressor from system.

Compressor mounting bolt torque is 65-75 in-lbs (7.3-8.5 N-m).

Compressor Rotation

On 3-phase units with scroll compressors, it is important to be certain compressor is rotating in the proper direction. To determine whether or not compressor is rotating in the proper direction:

1. Connect service gauges to suction and discharge pressure fittings.
2. Energize the compressor.
3. The suction pressure should drop and the discharge pressure should rise, as is normal on any start-up.

NOTE: If the suction pressure does not drop and the discharge pressure does not rise to normal levels:

1. Note that the evaporator fan is probably also rotating in the wrong direction.
2. Turn off power to the unit. Install lock-out tag.
3. Reverse any two of the unit power leads.
4. Reapply power to the compressor.

The suction and discharge pressure levels should now move to their normal start-up levels.

NOTE: When the compressor is rotating in the wrong direction, the unit makes an elevated level of noise and does not provide cooling.

Filter Drier

Replace whenever refrigerant system is exposed to atmosphere. Only use factory specified liquid-line filter driers with working pressures no less than 650 psig. Do not install a suction-line filter drier in liquid line. A liquid-line filter drier designed for use with Puron (R-410A) refrigerant is required on every unit.

Condenser-Fan Adjustment

1. Shut off unit power supply. Install lockout tag.
2. Remove condenser-fan assembly (grille, motor, and fan).
3. Loosen fan hub setscrews.
4. Adjust fan height as shown in Fig. 16.
5. Tighten setscrews to 84 in-lbs (9.5 N-m).
6. Replace condenser-fan assembly.

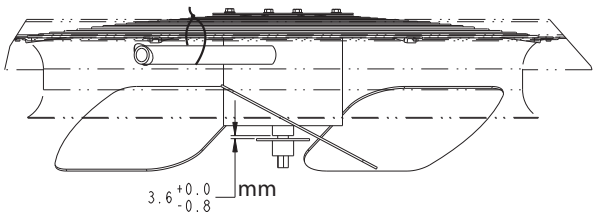

Fig. 16 - Condenser Fan Adjustment (D08-D12)

Troubleshooting Cooling System

Refer to Table 1 for additional troubleshooting topics.

CONVENIENCE OUTLETS

⚠ WARNING

ELECTRICAL OPERATION HAZARD

Failure to follow this warning could result in personal injury or death.

Units with convenience outlet circuits may use multiple disconnects. Check convenience outlet for power status before opening unit for service. Locate its disconnect switch, if appropriate, and open it. Tag-out this switch, if necessary.

Two types of convenience outlets are offered on 48TC models: Non-powered and unit-powered. Both types provide a 125-volt GFCI (ground-fault circuit-interrupter) duplex receptacle rated at 15-A behind a hinged waterproof access cover, located on the end panel of the unit. (See Fig. 17.)

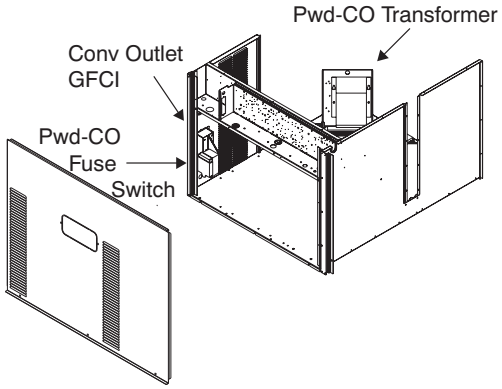

Fig. 17 - Convenience Outlet Location

Wet in Use Convenience Outlet Cover

The unit has a "wet in use" convenience outlet cover that must be installed on panel containing the convenience outlet. This cover provides protection against moisture entering the GFCI receptacle. This cover is placed in the unit control box during shipment.

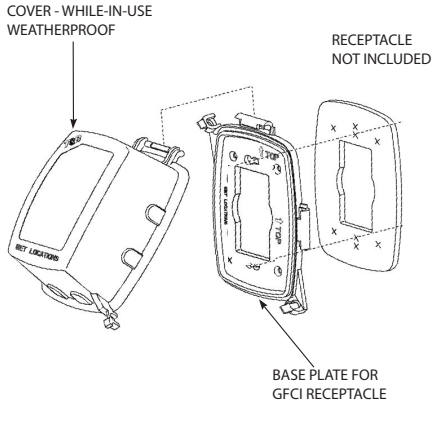

Fig. 18 - Convenience Outlet

Duty Cycle

The unit-powered convenience outlet has a duty cycle limitation. The transformer is intended to provide power on an intermittent basis for service tools, lamps, etc. It is not intended to provide 15-amps loading for continuous duty loads (such as electric heaters for overnight use). Observe a 50% limit on circuit loading above 8-amps (i.e., limit loads exceeding 8-amps to 30 minutes of operation every hour).

Non-Powered Type

This type requires the field installation of a general-purpose 125-volt 15-A circuit powered from a source elsewhere in the building. Observe national and local codes when selecting wire size, fuse or breaker requirements and disconnect switch size and location. Route 125-v power supply conductors into the bottom of the utility box containing the duplex receptacle.

Unit-Powered Type

A unit-mounted transformer is factory-installed to stepdown the main power supply voltage to the unit to 115-v at the duplex receptacle. This option also includes a manual switch with fuse, located in a utility box and mounted on a bracket behind the convenience outlet; access is through the unit's control box access panel. (See Fig. 17.)

The primary leads to the convenience outlet transformer are not factory-connected. Selection of primary power source is a customer-option. If local codes permit, the transformer primary leads can be connected at the line-side terminals on a unit-mounted non-fused disconnect or circuit-breaker switch. This will provide service power to the unit when the unit disconnect switch or circuit-breaker is open. Other connection methods will result in the convenience outlet circuit being de-energized when the unit disconnect or circuit-breaker is open. (See Fig. 19.)

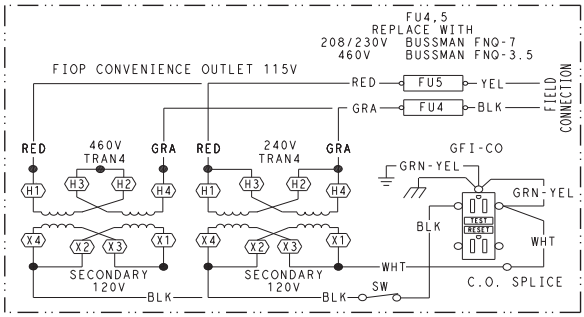

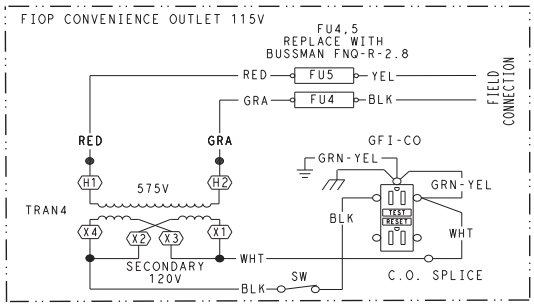

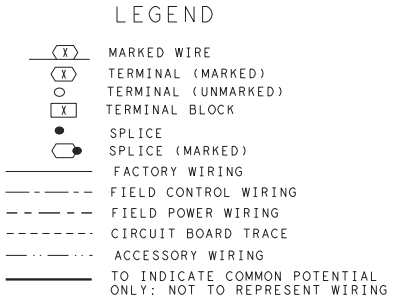

C10324

UNIT VOLTAGE	CONNECT AS	PRIMARY CONNECTIONS	TRANSFORMER TERMINALS
208, 230	240	L1: RED +YEL L2: BLU + GRA	H1 + H3 H2 + H4
460	480	L1: RED Splice BLU + YEL L2: GRA	H1 H2 + H3 H4
575	600	L1: RED L2: GRA	H1 H2

Fig. 19 - Powered Convenience Outlet Wiring

Maintenance

Periodically test the GFCI receptacle by pressing the TEST button on the face of the receptacle. This should cause the internal circuit of the receptacle to trip and open the receptacle. Check for proper grounding wires and power line phasing if the GFCI receptacle does not trip as required. Press the RESET button to clear the tripped condition.

Fuse On Powered Type

The factory fuse is a Bussman "Fusetron" T-15, non-renewable screw-in (Edison base) type plug fuse.

Using Unit-Mounted Convenience Outlets

Units with unit-mounted convenience outlet circuits will often require that two disconnects be opened to de-energize all power to the unit. Treat all units as electrically energized until the convenience outlet power is also checked and de-energization is confirmed. Observe National Electrical Code Article 210, Branch Circuits, for use of convenience outlets. Always use a volt meter to verify no voltage is present at the GFIC receptacles before working on unit.

SMOKE DETECTORS

Smoke detectors are available as factory-installed options on 48TC models. Smoke detectors may be specified for Supply Air only and/or for Return Air without or with economizer or in combination of Supply Air and Return Air. Return Air smoke detectors are arranged for vertical return configurations only. All components necessary for operation are factory-provided and mounted. The unit is factory-configured for immediate smoke detector shutdown operation. Additional wiring or modifications to unit terminal board may be necessary to complete the unit and smoke detector configuration to meet project requirements.

System

The smoke detector system consists of a four-wire controller (HT28TZ001) and one or two sensors (HT50TZ001). Its primary function is to shut down the rooftop unit in order to prevent smoke from circulating throughout the building. It is not to be used as a life saving device.

Controller

The controller includes a controller housing, a printed circuit board, and a clear plastic cover. (See Fig. 20.) The controller can be connected to one or two compatible duct smoke sensors. The clear plastic cover is secured to the housing with a single captive screw for easy access to the wiring terminals. The controller has three LEDs (Power, Trouble and Alarm) and a manual test/reset button (on the cover face).

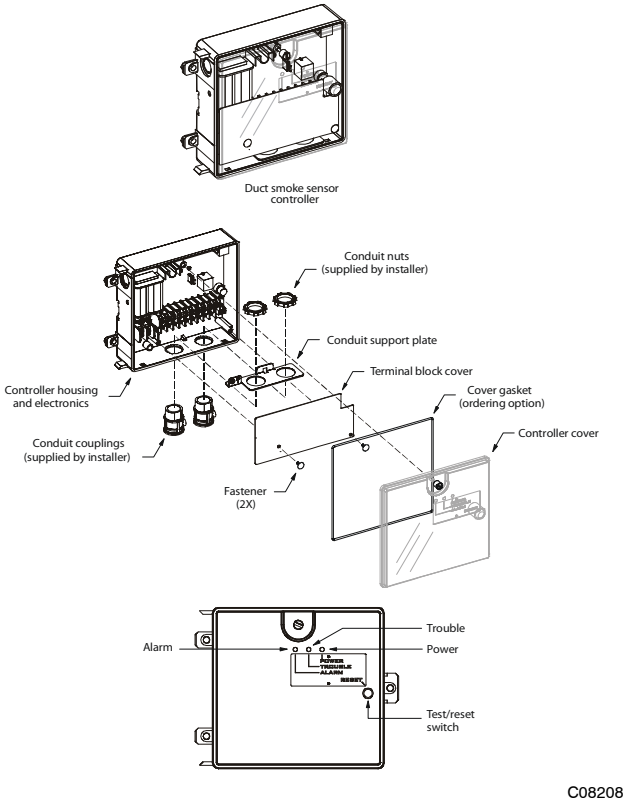

Fig. 20 - Controller Assembly

Sensor

The sensor includes a plastic housing, a printed circuit board, a clear plastic cover, a sampling tube inlet and an exhaust tube. (See Fig. 21.) The sampling tube (when used) and exhaust tube are attached during installation. The sampling tube varies in length depending on the size of the rooftop unit. The clear plastic cover permits visual inspections without having to disassemble the sensor. The cover attaches to the sensor housing using four captive screws and forms an airtight chamber around the sensing electronics. Each sensor includes a harness with an RJ45 terminal for connecting to the controller. Each sensor has four LEDs (for Power, Trouble, Alarm and Dirty) and a manual test/reset button (on the left-side of the housing).

Air is introduced to the duct smoke detector sensor's sensing chamber through a sampling tube that extends into the HVAC duct and is directed back into the ventilation system through a (shorter) exhaust tube. The difference in air pressure between the two tubes pulls the sampled air through the sensing chamber. When a sufficient amount of smoke is detected in the sensing chamber, the sensor signals an alarm state and the controller automatically takes the appropriate action to shut down fans and blowers, change over air handling systems, notify the fire alarm control panel, etc.

The sensor uses a photoelectric (light scattering principle) process called differential sensing to prevent gradual environmental changes from triggering false alarms. A rapid change in environmental conditions, such as smoke from a fire, causes the sensor to signal an alarm state, but dust and debris accumulated over time does not.

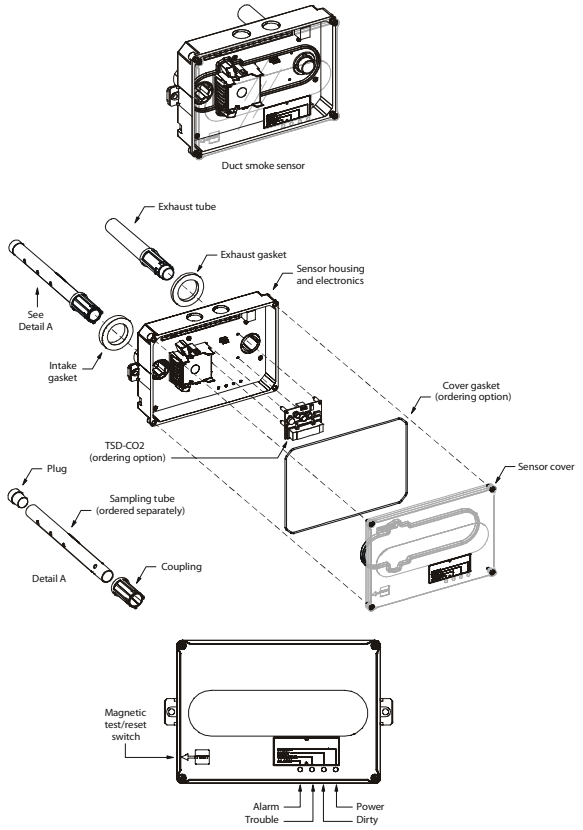

Fig. 21 - Smoke Detector Sensor

For installations using two sensors, the duct smoke detector does not differentiate which sensor signals an alarm or trouble condition.

Smoke Detector Locations

Supply Air

The Supply Air smoke detector sensor is located to the left of the unit's indoor (supply) fan. (See Fig. 22.) Access is through the fan access panel. There is no sampling tube used at this location. The sampling tube inlet extends through the side plate of the fan housing (into a high pressure area). The control module is mounted in the left side of the control box, accessed by opening the Control Box access door.

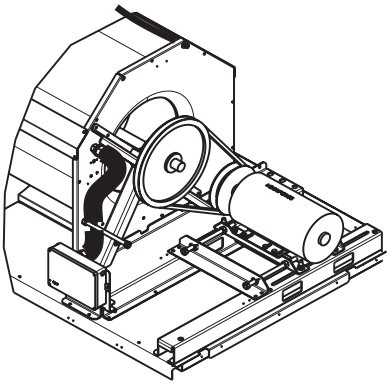

C10325

Fig. 22 - Typical Supply Air Smoke Detector Sensor Location

Return Air Without Economizer

The sampling tube is located across the return air opening on the unit basepan. (See Fig. 23.) The holes in the sampling tube face downward, into the return air stream. The sampling tube is attached to the control module bushing that extends from the control box through the partition into the return air section of the unit. The sensing tube is shipped mounted to the Indoor Blower Housing and must be relocated to the return air section of the unit. Installation requires that this sensing tube be attached to the control module bushing. See installation steps.)

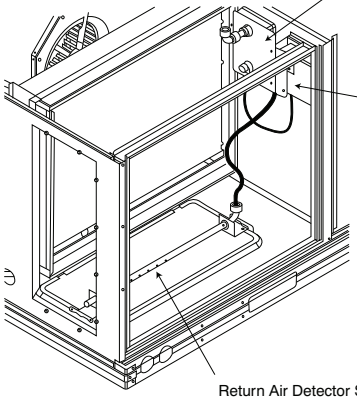

*RA detector must be moved from shipping position to operating position by installer

C07307

Fig. 23 - Typical Return Air Detector Location

Return Air With Economizer

The sampling tube is inserted through the side plates of the economizer housing, placing it across the return air opening on the unit basepan. (See Fig. 24.) The holes in the sampling tube face downward, into the return air stream. The sampling tube is connected via tubing to the return air sensor that is mounted on a bracket high on the partition between return filter and controller location. (This sensor is shipped in a flat-mounting location. Installation requires that this sensor be relocated to its operating location and the tubing to the sampling tube be connected. See installation steps.)

FIOP Smoke Detector Wiring and Response

All units: FIOP smoke detector is configured to automatically shut down all unit operations when smoke condition is detected. See Fig. 25, Smoke Detector Wiring.

Highlight A: JMP 3 is factory-cut, transferring unit control to smoke detector.

Highlight B: Smoke detector NC contact set will open on smoke alarm condition, de-energizing the ORN conductor.

Highlight C: 24-v power signal via ORN lead is removed at Smoke Detector input on LCTB; all unit operations cease immediately.

PremierLink™ and RTU-MP Controls: Unit operating functions (fan, cooling and heating) are terminated as described above. In addition:

Highlight D: On smoke alarm condition, the smoke detector NO Alarm contact will close, supplying 24-v power to GRA conductor.

Highlight E: GRA lead at Smoke Alarm input on LCTB provides 24-v signal to FIOP DDC control.

PremierLink: This signal is conveyed to PremierLink FIOP's TB1 at terminal TB1-6 (BLU lead). This signal initiates the FSD sequence by the PremierLink control. FSD status is reported to connected CCN network.

RTU-MP: The 24-v signal is conveyed to RTU-MP's J1-10 input terminal. This signal initiates the FSD sequence by the RTU-MP control. FSD status is reported to connected BAS network.

Using Remote Logic: Five conductors are provided for field use (see Highlight F) for additional annunciation functions.

Additional Application Data — Refer to Catalog No. HKRNKA-1XA for discussions on additional control features of these smoke detectors including multiple unit coordination. (See Fig. 25.)

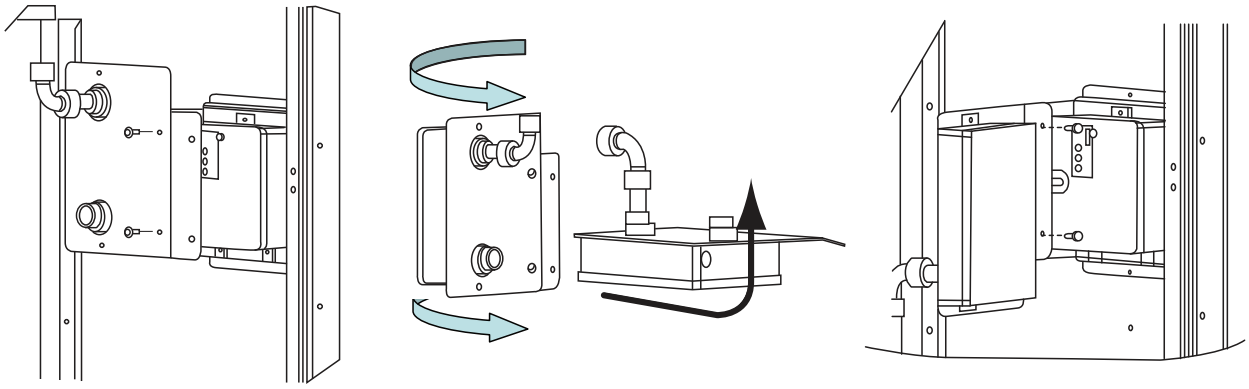

As received in the field.

The modules are side by side.

Unfasten the module containing the elbow fitting. Turn it 90° and rotate end to end to where fitting is pointing down. Notice the mounting bracket has a slight bend to it.

Attach the mounting bracket to the sensor module as shown.

C10357

Fig. 24 - Return Air Sampling Tube Location in Unit with Economizer

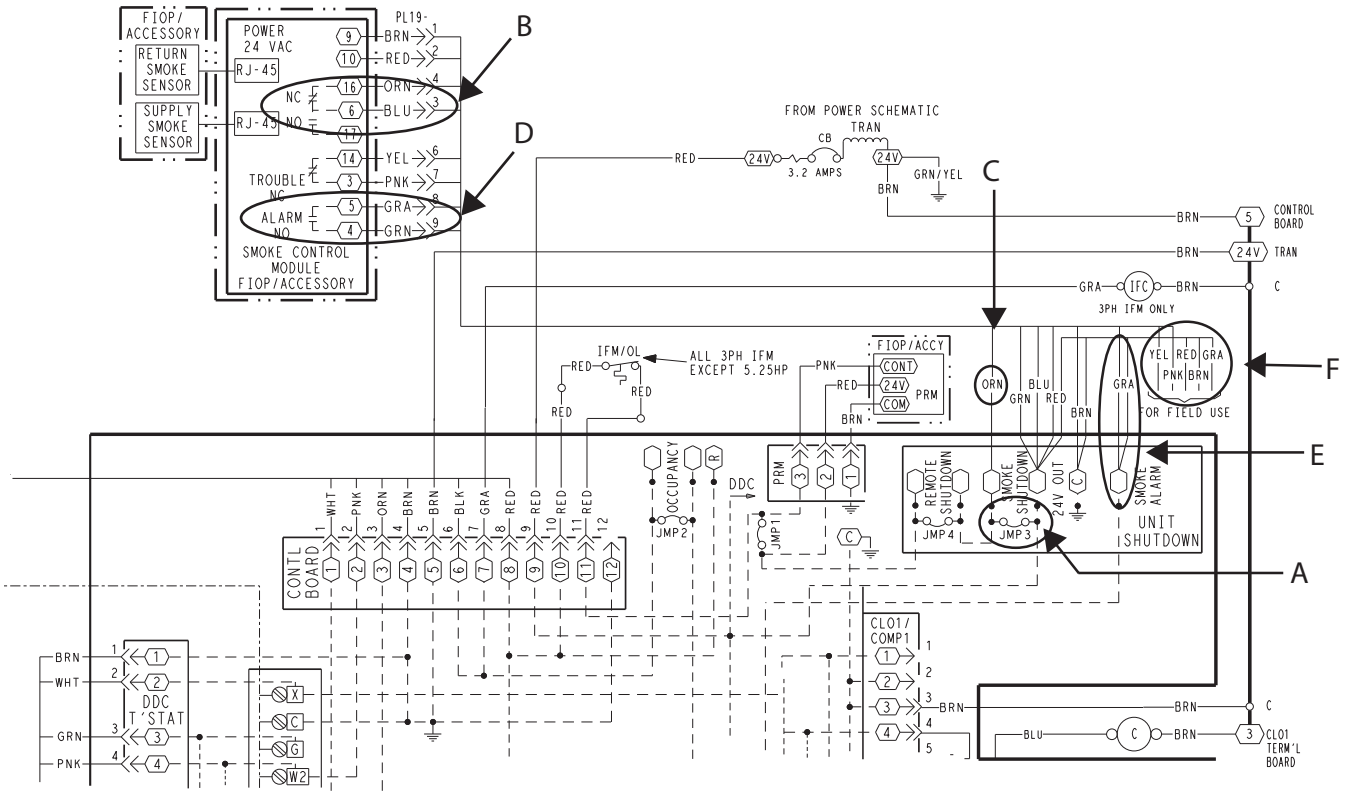

C08246

Fig. 25 - Typical Smoke Detector System Wiring

Sensor and Controller Tests

Sensor Alarm Test

The sensor alarm test checks a sensor's ability to signal an alarm state. This test requires that you use a field provided SD-MAG test magnet.

⚠ CAUTION

OPERATIONAL TEST HAZARD

Failure to follow this caution may result in personnel and authority concern.

This test places the duct detector into the alarm state. Unless part of the test, disconnect all auxiliary equipment from the controller before performing the test. If the duct detector is connected to a fire alarm system, notify the proper authorities before performing the test.

Sensor Alarm Test Procedure

1. Hold the test magnet where indicated on the side of the sensor housing for seven seconds.
2. Verify that the sensor's Alarm LED turns on.
3. Reset the sensor by holding the test magnet against the sensor housing for two seconds.
4. Verify that the sensor's Alarm LED turns off.

Controller Alarm Test

The controller alarm test checks the controller's ability to initiate and indicate an alarm state.

⚠ CAUTION

OPERATIONAL TEST HAZARD

Failure to follow this caution may result in personnel and authority concern.

This test places the duct detector into the alarm state. Disconnect all auxiliary equipment from the controller before performing the test. If the duct detector is connected to a fire alarm system, notify the proper authorities before performing the test.

Controller Alarm Test Procedure

1. Press the controller's test/reset switch for seven seconds.
2. Verify that the controller's Alarm LED turns on.
3. Reset the sensor by pressing the test/reset switch for two seconds.
4. Verify that the controller's Alarm LED turns off.

Dirty Controller Test

The dirty controller test checks the controller's ability to initiate a dirty sensor test and indicate its results.

⚠ CAUTION

OPERATIONAL TEST HAZARD

Failure to follow this caution may result in personnel and authority concern.

Pressing the controller's test/reset switch for longer than seven seconds will put the duct detector into the alarm state and activate all automatic alarm responses.

Dirty Controller Test Procedure

- Press the controller's test/reset switch for two seconds.
- Verify that the controller's Trouble LED flashes.

Dirty Sensor Test

The dirty sensor test provides an indication of the sensor's ability to compensate for gradual environmental changes. A sensor that can no longer compensate for environmental changes is considered 100% dirty and requires cleaning or replacing. You must use a field provided SD-MAG test magnet to initiate a sensor dirty test. The sensor's Dirty LED indicates the results of the dirty test as shown in Table 2.

⚠ CAUTION

OPERATIONAL TEST HAZARD

Failure to follow this caution may result in personnel and authority concern.

Holding the test magnet against the sensor housing for more than seven seconds will put the duct detector into the alarm state and activate all automatic alarm responses.

Table 2 – Dirty LED Test

FLASHES	DESCRIPTION
1	0–25% dirty. (Typical of a newly installed detector)
2	25–50% dirty
3	51–75% dirty
4	76–99% dirty

Dirty Sensor Test Procedure

1. Hold the test magnet where indicated on the side of the sensor housing for two seconds.
2. Verify that the sensor's Dirty LED flashes.

⚠ CAUTION

OPERATIONAL TEST HAZARD

Failure to follow this caution may result in personnel and authority concern.

Changing the dirty sensor test operation will put the detector into the alarm state and activate all automatic alarm responses. Before changing dirty sensor test operation, disconnect all auxiliary equipment from the controller and notify the proper authorities if connected to a fire alarm system.

Changing the Dirty Sensor Test

By default, sensor dirty test results are indicated by:

- The sensor's Dirty LED flashing.
- The controller's Trouble LED flashing.
- The controller's supervision relay contacts toggle.

The operation of a sensor's dirty test can be changed so that the controller's supervision relay is not used to indicate test results. When two detectors are connected to a controller, sensor dirty test operation on both sensors must be configured to operate in the same manner.

To Configure the Dirty Sensor Test Operation

1. Hold the test magnet where indicated on the side of the sensor housing until the sensor's Alarm LED turns on and its Dirty LED flashes twice (approximately 60 seconds).
2. Reset the sensor by removing the test magnet then holding it against the sensor housing again until the sensor's Alarm LED turns off (approximately 2 seconds).

Remote Station Test

The remote station alarm test checks a test/reset station's ability to initiate and indicate an alarm state.

⚠ CAUTION

OPERATIONAL TEST HAZARD

Failure to follow this caution may result in personnel and authority concern.

This test places the duct detector into the alarm state. Unless part of the test, disconnect all auxiliary equipment from the controller before performing the test. If the duct detector is connected to a fire alarm system, notify the proper authorities before performing the test.

SD-TRK4 Remote Alarm Test Procedure

1. Turn the key switch to the RESET/TEST position for seven seconds.
2. Verify that the test/reset station's Alarm LED turns on.
3. Reset the sensor by turning the key switch to the RESET/TEST position for two seconds.
4. Verify that the test/reset station's Alarm LED turns off.

Remote Test/Reset Station Dirty Sensor Test

The test/reset station dirty sensor test checks the test/reset station's ability to initiate a sensor dirty test and indicate the results. It must be wired to the controller as shown in Fig. 26 and configured to operate the controller's supervision relay. For more information, see "Changing the Dirty Sensor Test."

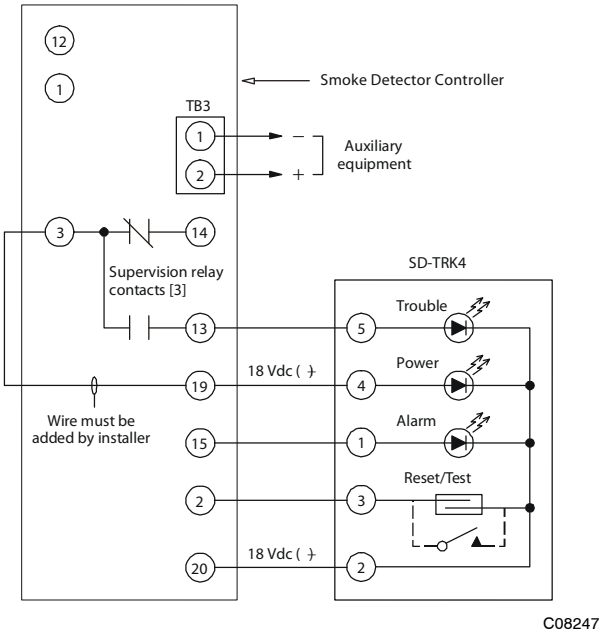

Fig. 26 - Remote Test/Reset Station Connections

⚠ CAUTION

OPERATIONAL TEST HAZARD

Failure to follow this caution may result in personnel and authority concern.

If the test/reset station's key switch is left in the RESET/TEST position for longer than seven seconds, the detector will automatically go into the alarm state and activate all automatic alarm responses.

⚠ CAUTION

OPERATIONAL TEST HAZARD

Failure to follow this caution may result in personnel and authority concern.

Holding the test magnet to the target area for longer than seven seconds will put the detector into the alarm state and activate all automatic alarm responses.

Dirty Sensor Test Using an SD-TRK4

1. Turn the key switch to the RESET/TEST position for two seconds.
2. Verify that the test/reset station's Trouble LED flashes.

Detector Cleaning

Cleaning the Smoke Detector

Clean the duct smoke sensor when the Dirty LED is flashing continuously or sooner if conditions warrant.

⚠ CAUTION

OPERATIONAL TEST HAZARD

Failure to follow this caution may result in personnel and authority concern.

If the smoke detector is connected to a fire alarm system, first notify the proper authorities that the detector is undergoing maintenance then disable the relevant circuit to avoid generating a false alarm.

1. Disconnect power from the duct detector then remove the sensor's cover. (See Fig. 27.)

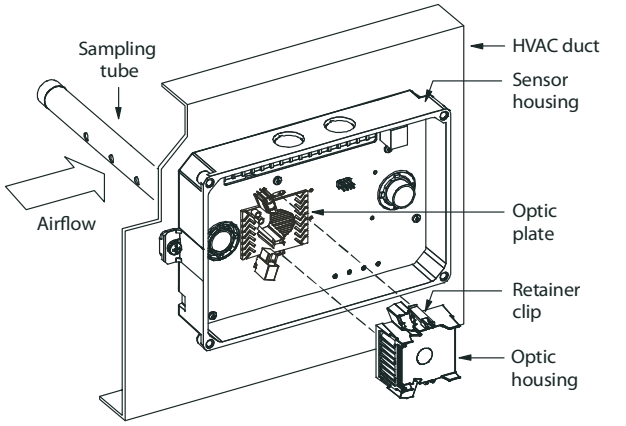

Fig. 27 - Sensor Cleaning Diagram

2. Using a vacuum cleaner, clean compressed air, or a soft bristle brush, remove loose dirt and debris from inside the sensor housing and cover.
   Use isopropyl alcohol and a lint-free cloth to remove dirt and other contaminants from the gasket on the sensor's cover.
3. Squeeze the retainer clips on both sides of the optic housing then lift the housing away from the printed circuit board.
4. Gently remove dirt and debris from around the optic plate and inside the optic housing.
5. Replace the optic housing and sensor cover.
6. Connect power to the duct detector then perform a sensor alarm test.

INDICATORS

Normal State

The smoke detector operates in the normal state in the absence of any trouble conditions and when its sensing chamber is free of smoke. In the normal state, the Power LED on both the sensor and the controller are on and all other LEDs are off.

Alarm State

The smoke detector enters the alarm state when the amount of smoke particulate in the sensor's sensing chamber exceeds the alarm threshold value. (See Table 3.) Upon entering the alarm state:

- The sensor's Alarm LED and the controller's Alarm LED turn on.
- The contacts on the controller's two auxiliary relays switch positions.
- The contacts on the controller's alarm initiation relay close.
- The controller's remote alarm LED output is activated (turned on).
- The controller's high impedance multiple fan shutdown control line is pulled to ground Trouble state.

The SuperDuct duct smoke detector enters the trouble state under the following conditions:

- A sensor's cover is removed and 20 minutes pass before it is properly secured.
- A sensor's environmental compensation limit is reached (100% dirty).
- A wiring fault between a sensor and the controller is detected.

An internal sensor fault is detected upon entering the trouble state:

- The contacts on the controller's supervisory relay switch positions. (See Fig. 28.)
- If a sensor trouble, the sensor's Trouble LED the controller's Trouble LED turn on.
- If 100% dirty, the sensor's Dirty LED turns on and the controller's Trouble LED flashes continuously.
- If a wiring fault between a sensor and the controller, the controller's Trouble LED turns on but not the sensor's.

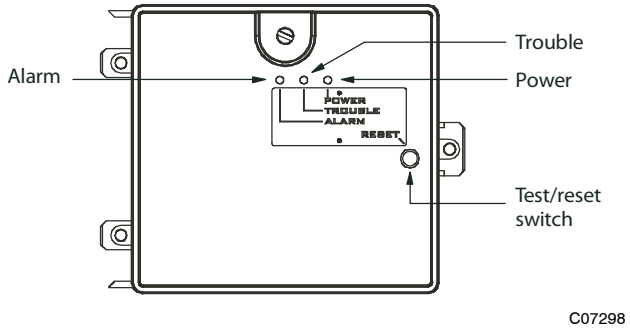

Fig. 28 - Controller Assembly

NOTE: All troubles are latched by the duct smoke detector. The trouble condition must be cleared and then the duct smoke detector must be reset in order to restore it to the normal state.

Table 3 – Detector Indicators

CONTROL OR INDICATOR	DESCRIPTION
Magnetic test/reset switch	Resets the sensor when it is in the alarm or trouble state. Activates or tests the sensor when it is in the normal state.
Alarm LED	Indicates the sensor is in the alarm state.
Trouble LED	Indicates the sensor is in the trouble state.
Dirty LED	Indicates the amount of environmental compensation used by the sensor (flashing continuously = 100%)
Power LED	Indicates the sensor is energized.

Resetting Alarm and Trouble Condition Trips:

Manual reset is required to restore smoke detector systems to Normal operation. For installations using two sensors, the duct smoke detector does not differentiate which sensor signals an alarm or trouble condition. Check each sensor for Alarm or Trouble status (indicated by LED). Clear the condition that has generated the trip at this sensor. Then reset the sensor by pressing and holding the reset button (on the side) for 2 seconds. Verify that the sensor's Alarm and Trouble LEDs are now off. At the controller, clear its Alarm or Trouble state by pressing and holding the manual reset button (on the front cover) for 2 seconds. Verify that the controller's Alarm and Trouble LEDs are now off. Replace all panels.

Troubleshooting

Controller's Trouble LED is On

1. Check the Trouble LED on each sensor connected to the controller. If a sensor's Trouble LED is on, determine the cause and make the necessary repairs.
2. Check the wiring between the sensor and the controller. If wiring is loose or missing, repair or replace as required.

Controller's Trouble LED is Flashing

1. One or both of the sensors is 100% dirty.
2. Determine which Dirty LED is flashing then clean that sensor assembly as described in the detector cleaning section.

Sensor's Trouble LED is On

1. Check the sensor's Dirty LED. If it is flashing, the sensor is dirty and must be cleaned.
2. Check the sensor's cover. If it is loose or missing, secure the cover to the sensor housing.
3. Replace sensor assembly.

Sensor's Power LED is Off

1. Check the controller's Power LED. If it is off, determine why the controller does not have power and make the necessary repairs.
2. Check the wiring between the sensor and the controller. If wiring is loose or missing, repair or replace as required.

Controller's Power LED is Off

1. Make sure the circuit supplying power to the controller is operational. If not, make sure JP2 and JP3 are set correctly on the controller before applying power.
2. Verify that power is applied to the controller's supply input terminals. If power is not present, replace or repair wiring as required.

Remote Test/Reset Station's Trouble LED Does Not Flash When Performing a Dirty Test, But the Controller's Trouble LED Does

1. Verify that the remote test/station is wired as shown in Fig. 26. Repair or replace loose or missing wiring.
2. Configure the sensor dirty test to activate the controller's supervision relay. See "Changing sensor dirty test operation."

Sensor's Trouble LED is On, But the Controller's Trouble LED is OFF

Remove JP1 on the controller.

PROTECTIVE DEVICES

Compressor Protection

Overcurrent

Each compressor has internal linebreak motor protection. Reset is automatic after compressor motor has cooled.

Overtemperature

Each compressor has an internal protector to protect it against excessively high discharge gas temperatures. Reset is automatic.

High Pressure Switch

Each system is provided with a high pressure switch mounted on the discharge line. The switch is stem-mounted and brazed into the discharge tube. Trip setting is 630 psig +/- 10 psig (4344 +/- 69 kPa) when hot. Reset is automatic at 505 psig (3482 kPa).

Low Pressure Switch

Each system is protected against a loss of charge and low evaporator coil loading condition by a low pressure switch located on the suction line near the compressor. The switch is stem-mounted. Trip setting is 54 psig +/- 5 psig (372 +/- 34 kPa). Reset is automatic at 117 +/- 5 psig (807 +/- 34 kPa).

Supply (Indoor) Fan Motor Protection

Disconnect and lockout power when servicing fan motor.

2.9 and 3.7 bhp motors are equipped with an overtemperature or protection device. The type of device depends on the motor size. (See Table 4.)

The High Static option supply fan motor is equipped with a pilot-circuit Thermik combination overtemperature/ overcurrent protection device. This device resets automatically. Do not bypass this switch to correct trouble. Determine the cause and correct it.

The Thermik device is a snap-action overtemperature protection device that is imbedded in the motor windings. The thermik can be identified by two blue wires extending out of the motor control box. It is a pilot-circuit device that is wired into the unit's 24-v control circuit. When this switch reaches its trip setpoint, it opens the 24-v control circuit and causes all unit operation to cease. This device resets automatically when the motor windings cool. Do not bypass this switch to correct trouble. Determine the cause and correct it.

The External motor overload device (used on motor with a horsepower rating of 4.7 hp or greater) is a specially-calibrated circuit breaker that is UL recognized as a motor overload controller. It is an overcurrent device. When the motor current exceeds the circuit breaker setpoint, the device opens all motor power leads and the motor shuts down. Reset requires a manual reset at the overload switch. This device (designated IFCB) is located on the side of the supply fan housing, behind the fan access panel. The Must Hold and Must Trip values are listed on the side of the External Overload Breaker.

Troubleshooting Supply Fan Motor Overload Trips

The supply fan used in 48TC units is a forward-curved centrifugal wheel. At a constant wheel speed, this wheel has a characteristic that causes the fan shaft load to DECREASE when the static pressure in the unit-duct system increases and to INCREASE when the static pressure in the unit-duct system decreases (and fan airflow rate increases). Motor overload conditions typically develop when the unit is operated with an access panel removed, with unfinished duct work, in an economizer-open mode, or a leak develops in the duct system that allows a bypass back to unit return opening.

Table 4 - Overcurrent Device Type

Motor Size (bhp)	Overload Device	Reset
1.7	Internal Linebreak	Automatic
2.4	Internal Linebreak	Automatic
2.9	Thermik	Automatic
3.7	Thermik	Automatic
4.7	External (Circuit Breaker)	Manual

Condenser Fan Motor Protection

The condenser fan motor is internally protected against overtemperature.

Control Circuit, 24-V

The control circuit is protected against overcurrent conditions by a circuit breaker mounted on control transformer TRAN. Reset is manual.

GAS HEATING SYSTEM

General

The heat exchanger system consists of a gas valve feeding multiple inshot burners off a manifold. The burners fire into matching primary tubes. The primary tubes discharge into combustion plenum where gas flow converges into secondary tubes (dimpled tubes). The secondary tubes exit into the collector box, the into the induced draft fan wheel inlet. The induced fan wheel discharges into a flue passage and flue gases exit out a flue hood on the side of the unit. The induced draft fan motor includes a Hall Effect sensor circuit that confirms adequate wheel speed via the Integrated Gas Control (IGC) board. Safety switches include a Rollout Switch (at the top of the burner compartment) and a limit switch (mounted through the side of the fan deck, over the tubes). (See Fig. 29 and 31.)

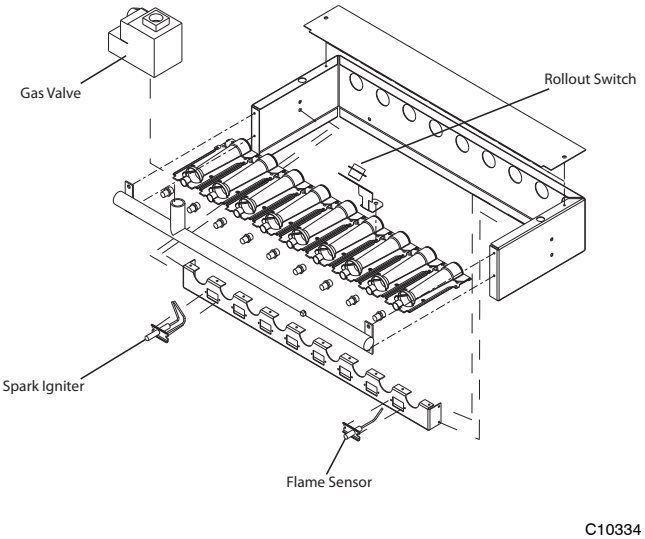

Fig. 29 - Burner Section Details

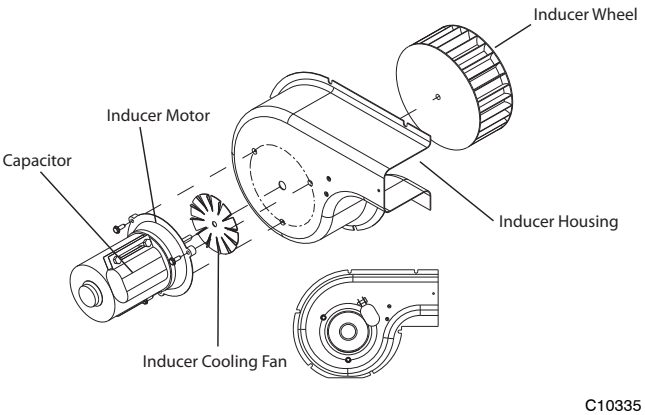

Fig. 30 - Inducer Assembly

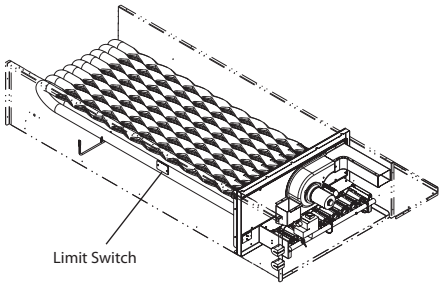

C10336

Fig. 31 - Limit Switch Location

Fuel Types and Pressures

Natural Gas

The 48TC unit is factory-equipped for use with Natural Gas fuel at elevation under 2000 ft (610 m). See section Orifice Replacement for information in modifying this unit for installation at elevations above 2000 ft (610 m).

Gas line pressure entering the unit's main gas valve must be within specified ranges. (See Table 5.) Adjust unit gas regulator valve as required or consult local gas utility.

Table 5 – Natural Gas Supply Line Pressure Ranges

UNIT MODEL	UNIT SIZE	MIN	MAX
48TC	All	4.0 in. wg (996 Pa)	13.0 in. wg (3240 Pa)

Manifold pressure is factory-adjusted for NG fuel use. Adjust as required to obtain best flame characteristic. (See Table 6.)

Table 6 – Natural Gas Manifold Pressure Ranges

UNIT MODEL	UNIT SIZE	HIGH FIRE	LOW FIRE	RANGE
48TC	All	3.5 in. wg (872 Pa)	1.7 in. wg (423 Pa)	2.0–5.0 in. wg (Hi) (498–1245 Pa)

Liquid Propane

Accessory packages are available for field-installation that will convert the 48TC unit to operate with Liquid Propane (LP) fuels. These kits include new orifice spuds, new springs for gas valves and a supply line low pressure switch. See section on Orifice Replacement for details on orifice size selections.

Fuel line pressure entering unit gas valve must remain within specified range. (See Table 7.)

Table 7 – Liquid Propane Supply Line Pressure Ranges

UNIT MODEL	UNIT SIZE	MIN	MAX
48TC	All	11.0 in. wg (2740 Pa)	13.0 in. wg (3240 Pa)

Manifold pressure for LP fuel use must be adjusted to specified range. (See Table 8.)Follow instructions in the accessory kit to make initial readjustment.

Table 8 – Liquid Propane Manifold Pressure Ranges

UNIT MODEL	UNIT SIZE	HIGH FIRE	LOW FIRE
48TC	All	10.0 in. wg (2490 Pa)	5.0 in. wg (1245 Pa)

Supply Pressure Switch

The LP conversion kit includes a supply low pressure switch. The switch contacts (from terminal C to terminal NO [Normally Open]) will open the gas valve power whenever the supply line pressure drops below the setpoint. (See Fig. 32 and 33.) The switch, HK02LB008, opens contacts on pressure "fall" at 7.2" ± 0.70" w.c. Contacts close on pressure rise above 10.2" w.c. If the low pressure remains open for 15 minutes during a call for heat, the IGC circuit will initiate a Ignition Fault (5 flashes) lockout. Reset of the low pressure switch is automatic on rise in supply line pressure. Reset of the IGC requires a recycle of unit power after the low pressure switch has closed.

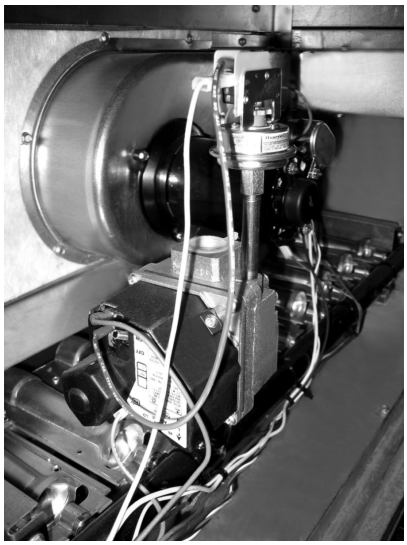

48TCDD08 only

C09396

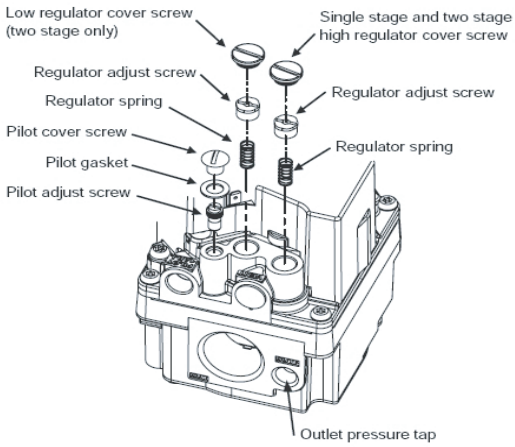

C08241

All 48TC*D except DD08

Fig. 32 - LP Low Pressure Switch (Installed)

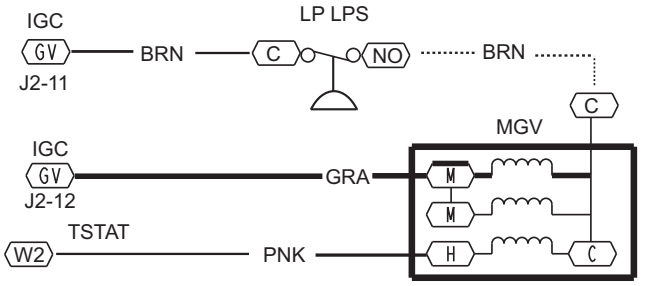

C08285

Fig. 33 - LP Supply Line Low Pressure Switch Wiring

This switch also prevents operation when the propane tank level is low which can result in gas with a high concentration of impurities, additives, and residues that have settled to the bottom of the tank. Operation under these conditions can cause harm to the heat exchanger system. Contact your fuel supplier if this condition is suspected.

Flue Gas Passageways

To inspect the flue collector box and upper areas of the heat exchanger:

1. Remove the combustion blower wheel and motor assembly according to directions in Combustion-Air Blower section. (See Fig. 34.)
2. Remove the flue cover to inspect the heat exchanger.
3. Clean all surfaces as required using a wire brush.

Combustion-Air Blower

Clean periodically to assure proper airflow and heating efficiency. Inspect blower wheel every fall and periodically during heating season. For the first heating season, inspect blower wheel bi-monthly to determine proper cleaning frequency.

To access burner section, open the heater access door below the indoor fan panel.

To inspect blower wheel, shine a flashlight into draft hood opening. If cleaning is required, remove motor and wheel as follows:

1. Remove the 7 screws that attach induced-draft motor housing to vestibule plate. (See Fig. 34.)
2. The blower wheel can be cleaned at this point. If additional cleaning is required, continue with Steps 4 and 5.
3. To remove blower from the motor shaft, remove 2 setscrews.
4. To remove motor, remove the 4 screws that hold the motor to mounting plate. Remove the motor cooling fan by removing one setscrew. Then remove nuts that hold motor to mounting plate.
5. To reinstall, reverse the procedure outlined above.

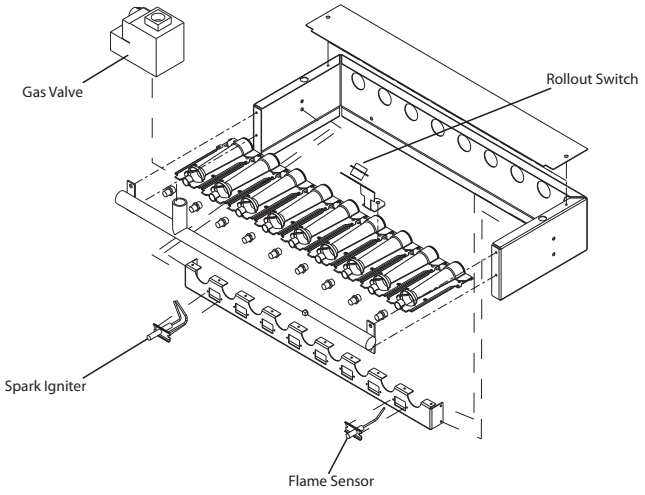

C10334

Fig. 34 - Heat Exchanger Assembly

Burners and Igniters

⚠ CAUTION

EQUIPMENT DAMAGE HAZARD

Failure to follow this caution may result in equipment damage.

When working on gas train, do not hit or plug orifice spuds.

Main Burners

To access the burner section, open the heater access door below the indoor fan panel. At the beginning of each heating season, inspect for deterioration or blockage due to corrosion or other causes. Observe the main burner flames and adjust, if necessary. Flames should be conical in shape and enter the heat exchanger tubes with minor impingement on sheet metal flame components.

Orifice Projection

Refer to Fig. 35 for maximum projection dimension for orifice face to manifold tube.

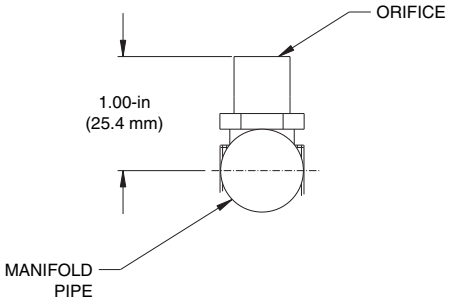

C08211

Fig. 35 - Orifice Projection

Removal and Replacement of Gas Train

See Fig. 29, 34, and 36.

1. Shut off gas at the manual shut off located on the gas supply line, then turn off gas valve switch located on gas valve (ON/OFF).
2. Shut off power to unit and install lockout tag.
3. Disconnect gas piping at unit gas valve.
4. Remove wires connected to gas valve. Mark each wire.

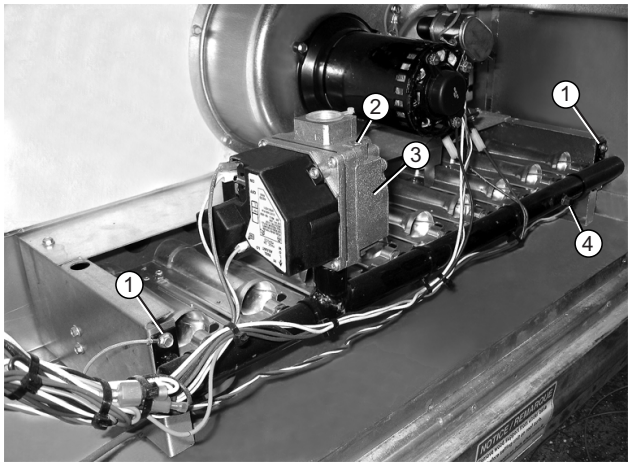

C09395

Item No.	Description
1	Gas Manifold Mounting Screws (qty 2)
2	Gas Valve Inlet Plug
3	Propane Conversion Label (apply label where indicated)
4	Gas Manifold Pressure Tap

Fig. 36 - Burner Tray Details

5. Remove igniter wires and sensor wires at the Integrated Gas Unit Controller (IGC). (See Fig. 37.)
6. Remove the 2 screws that attach the burner rack to the vestibule plate. (See Fig. 34.)
7. Slide the burner tray out of the unit. (See Fig. 36.)
8. To reinstall, reverse the procedure outlined above.

Cleaning and Adjustment

1. Remove burner rack from unit as described in Removal and Replacement of Gas Train section, above.
2. Inspect burners; if dirty, remove burners from rack. (Mark each burner to identify its position before removing from the rack.)
3. Use a soft brush to clean burners and cross-over port as required.
4. Adjust spark gap. The gap should be 0.12-0.14" (3.06-3.60 mm) and spaced 0.18" (4.60 mm) from the end of the burner. (See Fig. 38.)
5. If factory orifice has been removed, check that each orifice is tight at its threads into the manifold pipe and that orifice projection does not exceed maximum valve. (See Fig. 35).
6. Reinstall burners on rack in the same locations as factory-installed. (The outside crossover flame regions of the outermost burners are pinched off to prevent excessive gas flow from the side of the burner assembly. If the pinched crossovers are installed between two burners, the flame will not ignite properly.)

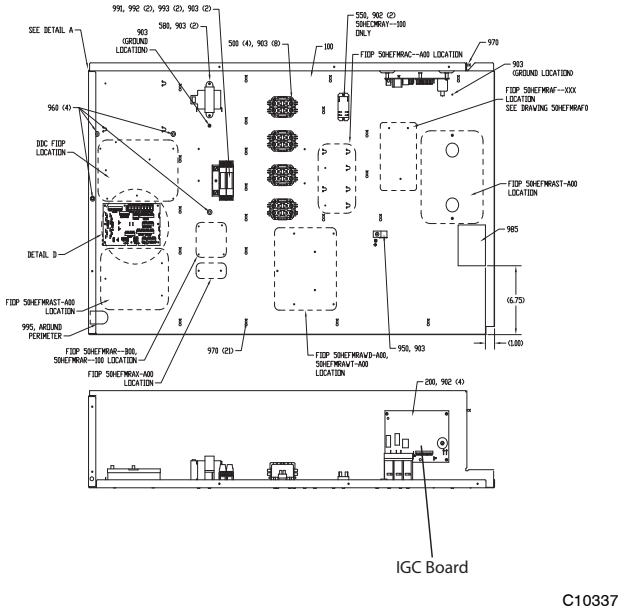

Fig. 37 - Unit Control Box/IGC Location

7. Reinstall burner rack as described in Removal and Replacement of Gas Train section.

Gas Valve

All unit sizes are equipped with 2-stage gas valves. See Fig. 39 for locations of adjustment screws and features on the gas valves.

To adjust gas valve pressure settings:

IMPORTANT: Leak check (using a mixture of soapy water or leak detection fluid) all gas connections including the main service connection, gas valve, gas spuds, and manifold pipe plug. All leaks must be repaired before firing unit.

Check Unit Operation and Make Necessary Adjustments

NOTE: Gas supply pressure at gas valve inlet must be within specified ranges for fuel type and unit size. (See Table 5, 6, 7, and 8.)

1. Shut off electrical power supplies to unit and install lockout tag.
2. Shut off manual gas shut off valve located on gas supply line.
3. Remove manifold pressure tap plug from manifold and connect pressure gauge or manometer. (See Fig. 36.)
4. Turn on electrical supply.
5. Open manual shut off valve, then turn on unit main gas valve.
6. Set room thermostat to call for heat. Verify high-stage heat operation before attempting to adjust manifold pressure.
7. When main burners ignite, check all fittings, manifold, and orifices for leaks.
8. Adjust high-stage pressure to specified setting by turning the plastic adjustment screw clockwise to increase pressure, counter-clockwise to decrease pressure.
9. Set room thermostat to call for low-stage heat. Adjust low-stage pressure to specified setting.
10. Replace regulator cover screw(s) when finished.
11. With burner access panel removed, observe unit heating operation in both high stage and low stage operation. Observe burner flames to see if they are blue in appearance, and that the flames are approximately the same for each burner.
12. Turn off unit, close manual gas shut off valve, remove pressure manometer and replace the 1/8 in. pipe fitting on the gas manifold. (See Fig. 36.)

Limit Switch

Remove blower access panel. Limit switch is located on the fan deck. (See Fig. 31.)

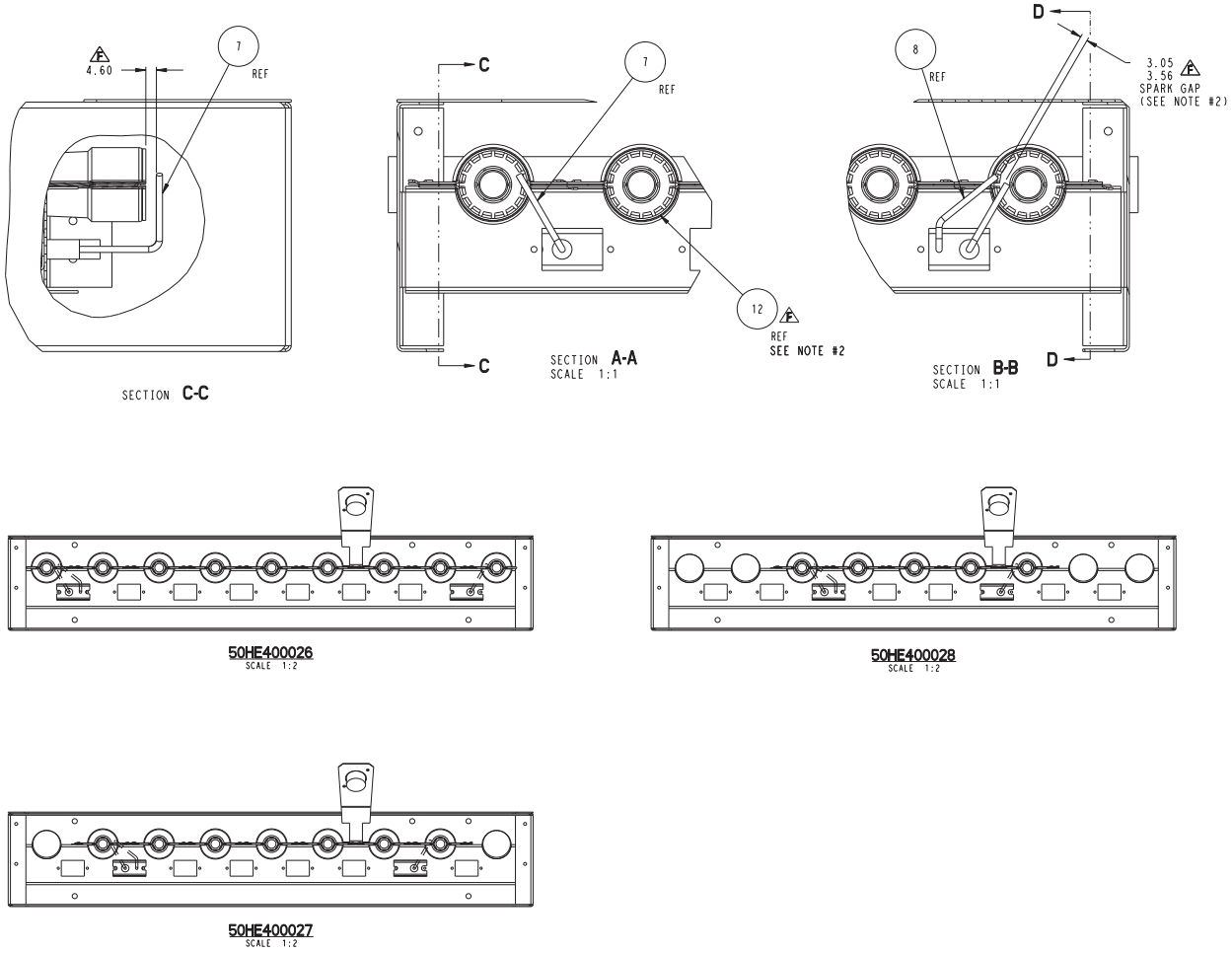

C10338

Fig. 38 - Spark Adjustment (08-14)

Burner Ignition

Unit is equipped with a direct spark ignition 100% lockout system. Integrated Gas Unit Controller (IGC) is located in the control box. (See Fig. 37.) The IGC contains a self-diagnostic LED (light-emitting diode). A single LED (see Fig. 41) on the IGC provides a visual display of operational or sequential problems when the power supply is uninterrupted. When a break in power occurs, the IGC will be reset (resulting in a loss of fault history) and the indoor (evaporator) fan ON/OFF times will be reset. The LED error code can be observed through the viewport. During servicing refer to the label on the control box cover or Table 9 for an explanation of LED error code descriptions.

If lockout occurs, unit may be reset by interrupting power supply to unit for at least 5 seconds.

Table 9 – LED Error Code Description*

LED INDICATION	ERROR CODE DESCRIPTION
ON	Normal Operation
OFF	Hardware Failure
2 Flashes	Limit Switch Fault
3 Flashes	Flame Sense Fault
4 Flashes	4 Consecutive Limit Switch Faults
5 Flashes	Ignition Lockout Fault
6 Flashes	Induced – Draft Motor Fault
7 Flashes	Rollout Switch Fault
8 Flashes	Internal Control Fault
9 Flashes	Software Lockout

LEGEND

LED – Light Emitting Diode

* A 3 – second pause exists between LED error code flashes. If more than one error code exists, all applicable codes will be displayed in numerical sequence.

IMPORTANT: Refer to Troubleshooting Tables 13 and 14 for additional information.

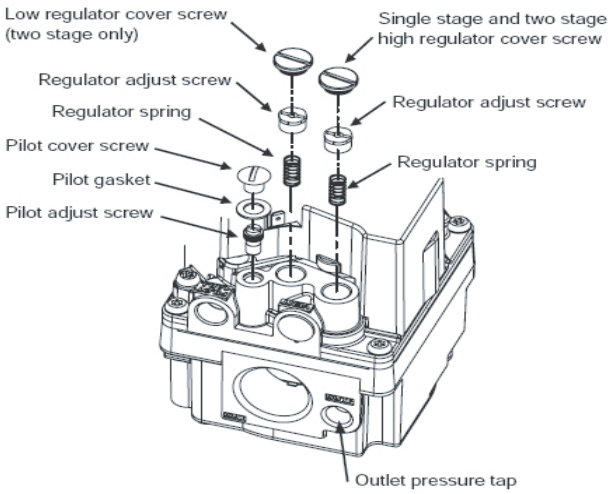

C08241

Fig. 39 - Gas Valve

Orifice Replacement

This unit uses orifice type LH32RFnnn (where nnn indicates orifice reference size). When replacing unit orifices, order the necessary parts via Carrier RCD. See Table 11 for available orifice sizes. See Table 12 for orifice sizes for Natural Gas and LP fuel usage at various elevations above sea level. Never drill or plug orifices for operation.

Check that each replacement orifice is tight at its threads into the manifold pipe and that orifice projection does not exceed maximum value. (See Fig. 35.)

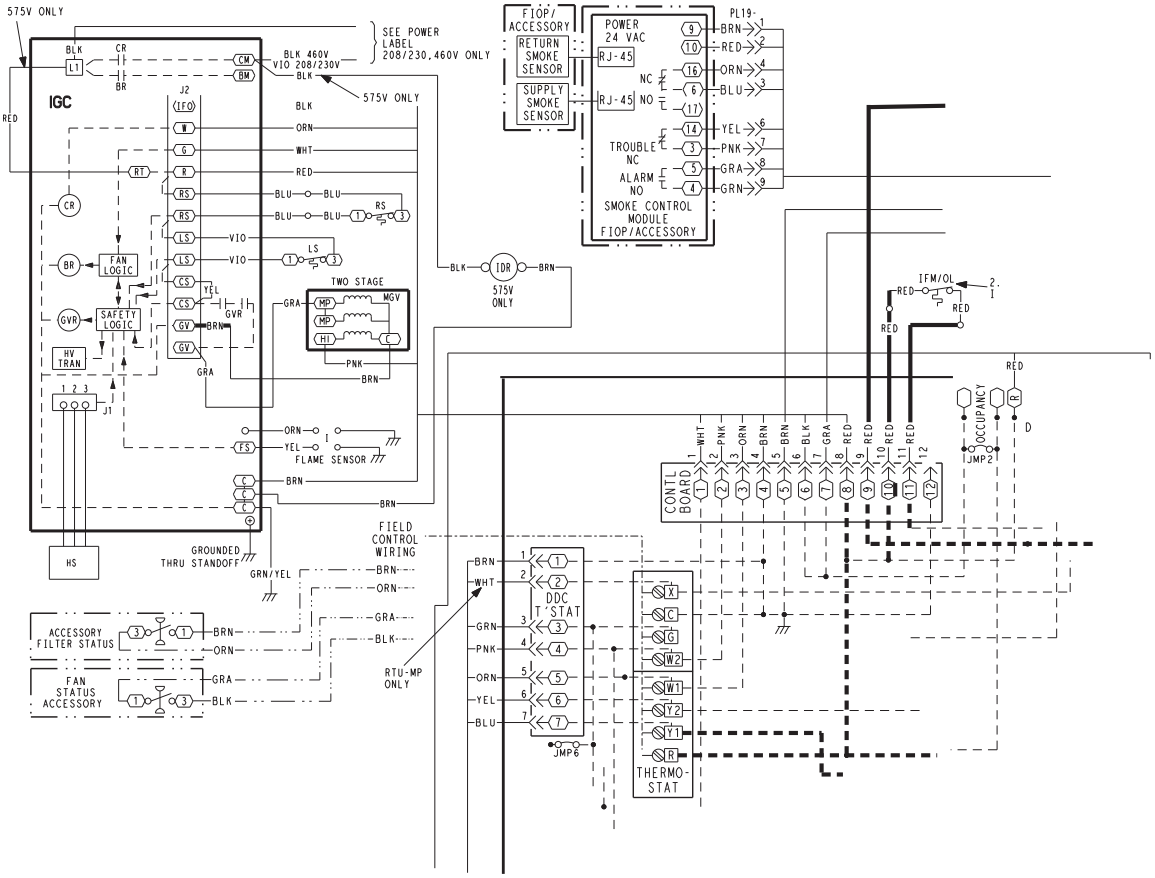

C10339

Fig. 40 - Typical IGC Wiring Diagram

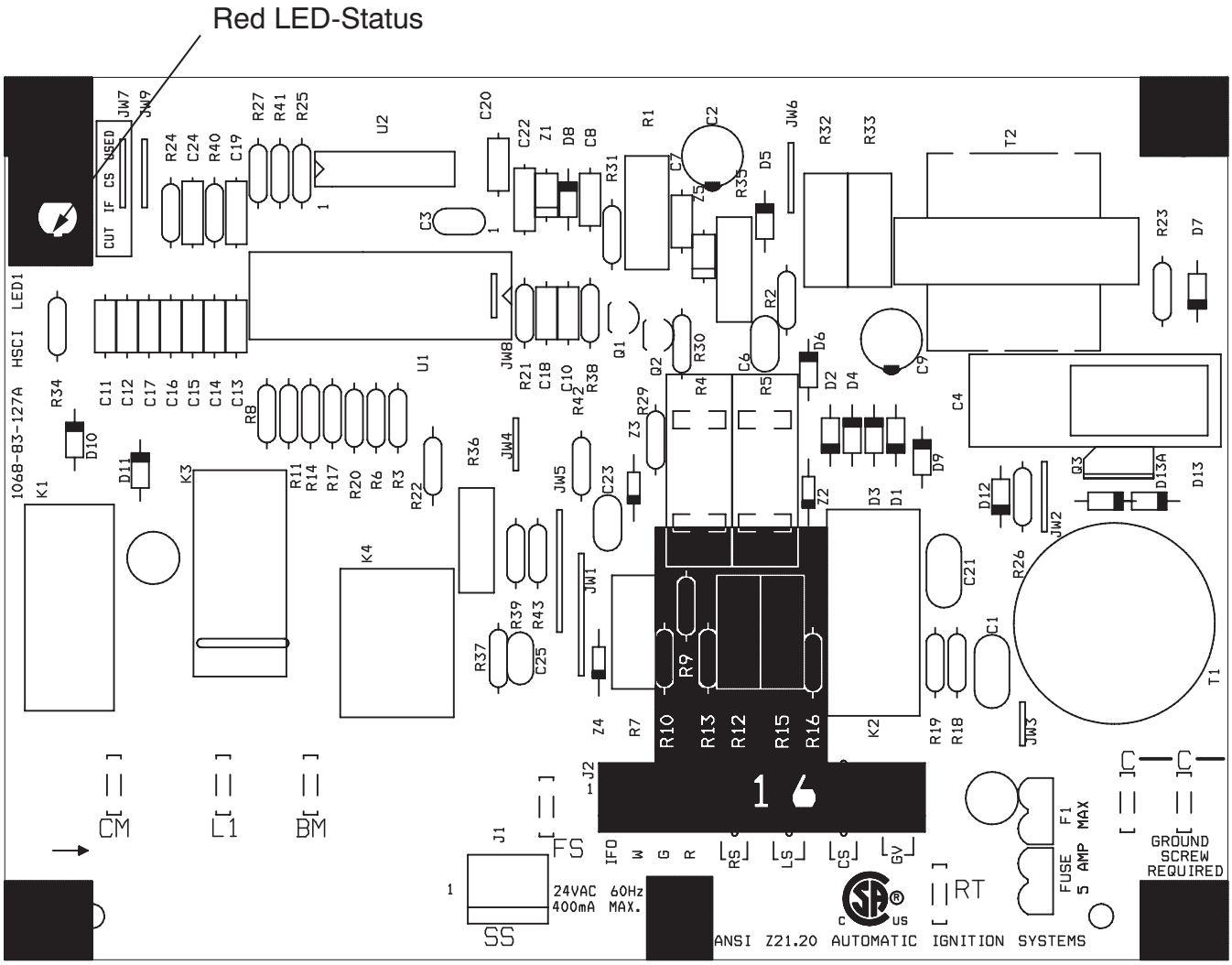

C08452

Fig. 41 - Integrated Gas Control (IGC) Board

Table 10 – IGC Connections

TERMINAL LABEL	POINT DESCRIPTION	SENSOR LOCATION	TYPE OF I/O	CONNECTION PIN NUMBER
INPUTS				
RT, C	Input power from TRAN 1	control box	24 VAC	—
SS	Speed sensor	gas section	analog input	J1, 1-3
FS, T1	Flame sensor	gas section	switch input	—
W	Heat stage 1	LCTB	24 VAC	J2, 2
RS	Rollout switch	gas section	switch input	J2, 5-6
LS	Limit switch	fan section	switch input	J2, 7-8
CS	Centrifugal switch (not used)	—	switch input	J2, 9-10
OUTPUTS				
L1, CM	Induced draft combustion motor	gas section	line VAC	
IFO	Indoor fan	control box	relay	J2, 1
GV	Gas valve (heat stage 1)	gas section	relay	J2, 11-12

Table 11 – Orifice Sizes

ORIFICE DRILL SIZE	CARRIER PART NUMBER	DRILL DIA. (in.)
#30	LH32RF129	0.1285
1/8	LH32RF125	0.1250
#31	LH32RF120	0.1200
#32	LH32RF116	0.1160
#33	LH32RF113	0.1130
#34	LH32RF111	0.1110
#35	LH32RF110	0.1100
#36	LH32RF105	0.1065
#37	LH32RF104	0.1040
#38	LH32RF102	0.1015
#39	LH32RF103	0.0995
#40	LH32RF098	0.0980
#41	LH32RF096	0.0960
#42	LH32RF094	0.0935
#43	LH32RF089	0.0890
#44	LH32RF086	0.0860
#45	LH32RF082	0.0820
#46	LH32RF080	0.0810
#47	LH32RF079	0.0785
#48	LH32RF076	0.0760
#49	LH32RF073	0.0730
#50	LH32RF070	0.0700
#51	LH32RF067	0.0670
#52	LH32RF065	0.0635
#53	LH32RF060	0.0595
#54	LH32RF055	0.0550
#55	LH32RF052	0.0520
#56	LH32RF047	0.0465
#57	LH32RF043	0.0430
#58	LH32RF042	0.0420

Table 12 - Altitude Compensation* (08-14)

NATURAL GAS		NOMINAL HEAT INPUT					
ELEVATION		220k BTUH		310k BTUH		400k BTUH	
Feet	Meters	Orifice Size	Input (btu/hr)	Orifice Size	Input (btu/hr)	Orifice Size	Input (btu/hr)
0 – 2000	0 – 610	30	220,000	30	310,000	30	400,000
2000	610	30	202,400	30	285,200	30	368,000
3000	914	31[1]	193,600	31[1]	272,800	31[1]	352,000
4000	1219	31[1]	184,800	31[1]	260,400	31[1]	336,000
5000	1524	31[1]	176,000	31[1]	248,000	31[1]	320,000
6000	1829	31[1]	167,200	31[1]	235,600	31[1]	304,000
7000	2134	32[1]	158,400	32[1]	223,200	32[1]	288,000
8000	2438	32[1]	149,600	32[1]	210,800	32[1]	272,000
9000	2743	34[1]	140,800	34[1]	198,400	34[1]	256,000
10000	3048	35[2]	132,000	35[2]	186,000	35[2]	240,000
11000	3353	37[2]	123,200	37[2]	173,600	37[2]	224,000
12000	3658	37[2]	114,400	37[2]	161,200	37[2]	208,000
13000	3962	39[2]	105,600	39[2]	148,800	39[2]	192,000
14000	4267	39[2]	96,800	39[2]	136,400	39[2]	176,000

PROPANE GAS		NOMINAL HEAT INPUT					
ELEVATION		220k BTUH		310k BTUH		400k BTUH	
Feet	Meters	Orifice Size	Input (btu/hr)	Orifice Size	Input (btu/hr)	Orifice Size	Input (btu/hr)
0 – 2000	0 – 610	48[5]	220,000	48[5]	310,000	48[5]	400,000
2000	610	49[3]	202,400	49[3]	285,200	49[3]	368,000
3000	914	49[3]	193,600	49[3]	272,800	49[3]	352,000
4000	1219	49[3]	184,800	49[3]	260,400	49[3]	336,000
5000	1524	50[3]	176,000	50[3]	248,000	50[3]	320,000
6000	1829	50[3]	167,200	50[3]	235,600	50[3]	304,000
7000	2134	50[3]	158,400	50[3]	223,200	50[3]	288,000
8000	2438	51[3]	149,600	51[3]	210,800	51[3]	272,000
9000	2743	51[3]	140,800	51[3]	198,400	51[3]	256,000
10000	3048	52[4]	132,000	52[4]	186,000	52[4]	240,000
11000	3353	52[4]	123,200	52[4]	173,600	52[4]	224,000
12000	3658	53[4]	114,400	53[4]	161,200	53[4]	208,000
13000	3962	53[4]	105,600	53[4]	148,800	53[4]	192,000
14000	4267	53[4]	96,800	53[4]	136,400	53[4]	176,000

* As the height above sea level increases, there is less oxygen per cubic ft. of air. Therefore, heat input rate should be reduced at higher altitudes.

KIT NO.:

XX[1] = CRNGELEV001A00
XX[2] = CRNGELEV002A00
XX[3] = CRLPELEV005A00
XX[4] = CRLPELEV006A00
XX[5] = CRLPKIT9001A00

Minimum Heating Entering Air Temperature

When operating on first stage heating, the minimum temperature of air entering the dimpled heat exchanger is 50°F continuous and 45°F intermittent for standard heat exchangers and 40°F continuous and 35°F intermittent for stainless steel heat exchangers. To operate at lower return or mixed air temperatures, a field-supplied outdoor-air thermostat must be used to initiate both stages of heat when the temperature is below the minimum required temperature to ensure full fire operation. Wire the outdoor-air thermostat OALT (part no. HH22AG106) in series with the second stage gas valve. (See Fig. 42.) Set the outdoor-air thermostat at 35°F for stainless steel heat exchangers or 45°F for standard heat exchangers. This temperature setting will bring on the second stage of heat whenever the ambient temperature is below the thermostat setpoint. Indoor comfort may be compromised when heating is initiated using low entering air temperatures with insufficient heating temperature rise.

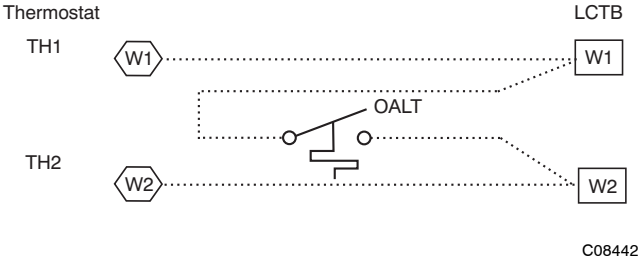

Fig. 42 - OATL Connections

Troubleshooting Heating System

Refer to Table 13 and 14 for additional troubleshooting topics.

48TC

Table 13 – Heating Service Analysis

PROBLEM	CAUSE	REMEDY
Burners Will Not Ignite.	Misaligned spark electrodes.	Check flame ignition and sensor electrode positioning. Adjust as needed.
	No gas at main burners.	Check gas line for air, purge as necessary. After purging gas line of air, allow gas to dissipate for at least 5 minutes before attempting to relight unit.
		Check gas valve.
	Water in gas line.	Drain water and install drip leg to trap water.
	No power to furnace.	Check power supply, fuses, wiring, and circuit breaker.
	No 24 v power supply to control circuit.	Check transformer. Transformers with internal overcurrent protection require a cool down period before resetting.
	Miswired or loose connections.	Check all wiring and wire nut connections.
	Burned–out heat anticipator in thermostat.	Replace thermostat.
	Broken thermostat wires.	Run continuity check. Replace wires, if necessary.
Inadequate Heating.	Dirty air filter.	Clean or replace filter as necessary.
	Gas input to unit too low.	Check gas pressure at manifold. Clock gas meter for input. If too low, increase manifold pressure, or replace with correct orifices.
	Unit undersized for application.	Replace with proper unit or add additional unit.
	Restricted airflow.	Clean filter, replace filter, or remove any restrictions.
	Blower speed too low.	Use high speed tap, increase fan speed, or install optional blower, as suitable for individual units.
	Limit switch cycles main burners.	Check rotation of blower, thermostat heat anticipator settings, and temperature rise of unit. Adjust as needed.
	Too much outdoor air.	Adjust minimum position.
		Check economizer operation.
Poor Flame Characteristics.	Incomplete combustion (lack of combustion air) results in: Aldehyde odors, CO, sooting flame, or floating flame.	Check all screws around flue outlets and burner compartment. Tighten as necessary.
		Cracked heat exchanger.
		Overfired unit — reduce input, change orifices, or adjust gas line or manifold pressure.
		Check vent for restriction. Clean as necessary.
		Check orifice to burner alignment.
Burners Will Not Turn Off.	Unit is locked into Heating mode for a one minute minimum.	Wait until mandatory one–minute time period has elapsed or reset power to unit.

Table 14 – IGC Board LED Alarm Codes

LED FLASH CODE	DESCRIPTION	ACTION TAKEN BY CONTROL	RESET METHOD	PROBABLE CAUSE
On	Normal Operation	—	—	—
Off	Hardware Failure	No gas heating.	—	Loss of power to the IGC. Check 5 amp fuse on IGC, power to unit, 24V circuit breaker, transformer, and wiring to the IGC.
2 Flashes	Limit Switch Fault	Gas valve and igniter Off. Indoor fan and inducer On.	Limit switch closed, or heat call (W) Off.	High temperature limit switch is open. Check the operation of the indoor (evaporator) fan motor. Ensure that the supply-air temperature rise is within the range on the unit nameplate. Check wiring and limit switch operation. Check/clean return air filters. Check burner assembly manifold pressure to ensure proper firing rate.
3 Flashes	Flame Sense Fault	Indoor fan and inducer On.	Flame sense normal. Power reset for LED reset.	The IGC sensed a flame when the gas valve should be closed. The minimum flame sensing microamps is 0.5 ma. Check wiring, flame sensor, and gas valve operation.
4 Flashes	Four Consecutive Limit Switch Fault	No gas heating.	Heat call (W) Off. Power reset for LED reset.	4 consecutive limit switch faults within a single call for heat. See Limit Switch Fault.
5 Flashes	Ignition Fault	No gas heating.	Heat call (W) Off. Power reset for LED reset.	Unit unsuccessfully attempted ignition for 15 minutes. Check igniter and flame sensor electrode spacing, gaps, etc. Check flame sense and igniter wiring. Check gas valve operation and gas supply.
6 Flashes	Induced Draft Motor Fault	If heat off: no gas heating. If heat on: gas valve Off and inducer On.	Inducer sense normal, or heat call (W) Off.	Inducer sense On when heat call Off, or inducer sense Off when heat call On. Check wiring, voltage, and operation of IGC motor. Check speed sensor wiring to IGC. Check to ensure Hall Effect wires are not rubbing against cabinet sheet metal.
7 Flashes	Rollout Switch Lockout	Gas valve and igniter Off. Indoor fan and inducer On.	Power reset.	Rollout switch has opened. Check gas valve operation. Check induced-draft blower wheel is properly secured to motor shaft.
8 Flashes	Internal Control Lockout	No gas heating.	Power reset.	IGC has sensed internal hardware or software error. If fault is not cleared by resetting 24 v power, replace the IGC. Check gas valve connections to IGC terminals. BRN lead must be on Pin 11. Check that W1, W2 and Com are correctly connected to the gas valve terminals.
9 Flashes	Temporary Software Lockout	No gas heating.	1 hour auto reset, or power reset.	Electrical interference is disrupting the IGC software.

LEGEND
IGC – Integrated Gas Unit Control
LED – Light–Emitting Diode
NOTES:
1. There is a 3–second pause between alarm code displays.
2. If more than one alarm code exists, all applicable alarm codes will be displayed in numerical sequence.
3. Alarm codes on the IGC will be lost if power to the unit is interrupted.

CONDENSER COIL SERVICE

Condenser Coil

The condenser coil is new NOVATION Heat Exchanger Technology. This is an all-aluminum construction with louvered fins over single-depth crosstubes. The crosstubes have multiple small passages through which the refrigerant passes from header to header on each end. Tubes and fins are both aluminum construction. Connection tube joints are copper. The coil may be one-row or two-row. Two-row coils are spaced apart to assist in cleaning.

Repairing NOVATION Condenser Tube Leaks

RCD offers service repair kit Part Number 50TJ660007 for repairing tube leaks in the NOVATION coil crosstubes. This kit includes approved braze materials (aluminum flux core braze rods), a heat shield, a stainless steel brush, replacement fin segments, adhesive for replacing fin segments, and instructions specific to the NOVATION aluminum coil. See EPIC for instruction sheet 99TA526379.

The repair procedure requires the use of Butane or MAPP gas and torch (must be supplied by servicer) instead of conventional oxyacetylene fuel and torch. While the flame temperature for Butane/MAPP is lower than that of oxyacetylene (and thus provides more flexibility when working on aluminum), the flame temperature is still higher than the melting temperature of aluminum, so user caution is required. Follow instructions carefully. Use the heat shield.

Replacing NOVATION Condenser Coil

The service replacement coil is preformed and is equipped with transition joints with copper stub tubes. When brazing the connection joints to the unit tubing, use a wet cloth around the aluminum tube at the transition joint. Avoid applying torch flame directly onto the aluminum tubing.

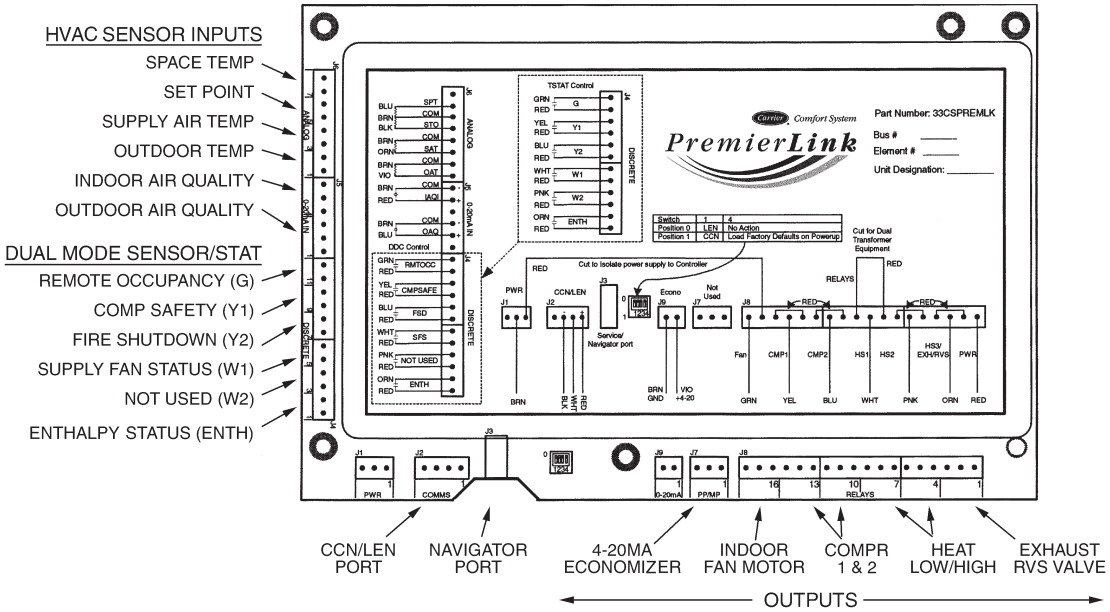

Fig. 43 - PremierLink™ Controller

PREMIERLINK™ CONTROL

The PremierLink controller (see Fig. 43) is compatible with Carrier Comfort Network® (CCN) devices. This control is designed to allow users the access and ability to change factory-defined settings, thus expanding the function of the standard unit control board. CCN service access tools include System Pilot (TM), Touch Pilot (TM) and Service Tool. (Standard tier display tools Navigator™ and Scrolling Marquee are not suitable for use with latest PremierLink controller (Version 2.x).)

The PremierLink control is factory-mounted in the 48TC unit's main control box to the left of the LCTB. Factory wiring is completed through harnesses connected to the LCTB thermostat. Field connections are made at a 16-pole terminal block (TB1) located on the bottom shelf of the unit control box in front of the PremierLink controller The factory-installed PremierLink control includes the supply-air temperature (SAT) sensor. The outdoor air temperature (OAT) sensor is included in the FIOP/accessory EconoMi$er 2 package.

Refer to Fig. 43 for PremierLink connection locations.

NOTE: Refer to the Rooftop PremierLink Installation, Start-Up, and Configuration Instructions (Form 33CS-58SI) for complete PremierLink configuration, operating sequences and troubleshooting information. Have a copy of this manual available at unit start-up.

The PremierLink controller requires the use of a Carrier electronic thermostat or a CCN connection for time broadcast to initiate its internal timeclock. This is necessary for broadcast of time of day functions (occupied/unoccupied).

NOTE: PremierLink controller is shipped in Sensor mode. To be used with a thermostat, the PremierLink controller must be configured to Thermostat mode. Refer to PremierLink Configuration instructions for Operating Mode.

Supply Air Temperature (SAT) Sensor

On FIOP-equipped 48TC unit, the unit is supplied with a supply-air temperature (SAT) sensor (33ZCSENSAT). This sensor is a tubular probe type, approx. 6-inches (12.7 mm) in length. It is a nominal 10-k ohm thermistor. See Table 15 for temperature-resistance characteristic.

The SAT is factory-wired. The SAT probe is mounted in the fan deck. (See Fig. 44.) It can be removed or remounted per local codes. Drill or punch a 1/2-in. hole in the flange or duct. Use two field-supplied, self-drilling screws to secure the sensor probe in a horizontal orientation. Insure that the sensor wires do not contact the hot surface of the heat exchanger.

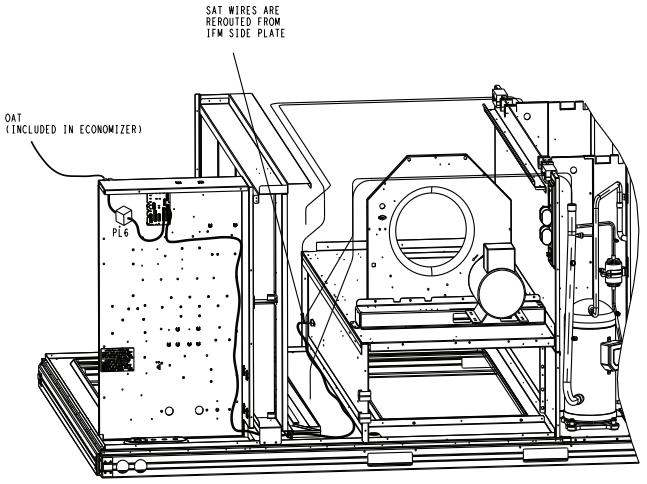

C10358

Fig. 44 - Mounting Location for Supply Air Temperature (SAT) Sensor on 48TC*D Units

NOTE: Refer to Form 33CS-58SI for complete PremierLink configuration, operating sequences and troubleshooting information. Have a copy of this manual available at unit start-up.

NOTE: The sensor must be mounted in the discharge airstream downstream of the cooling coil and any heating devices. Be sure the probe tip does not come in contact with any of the unit's heater surfaces.

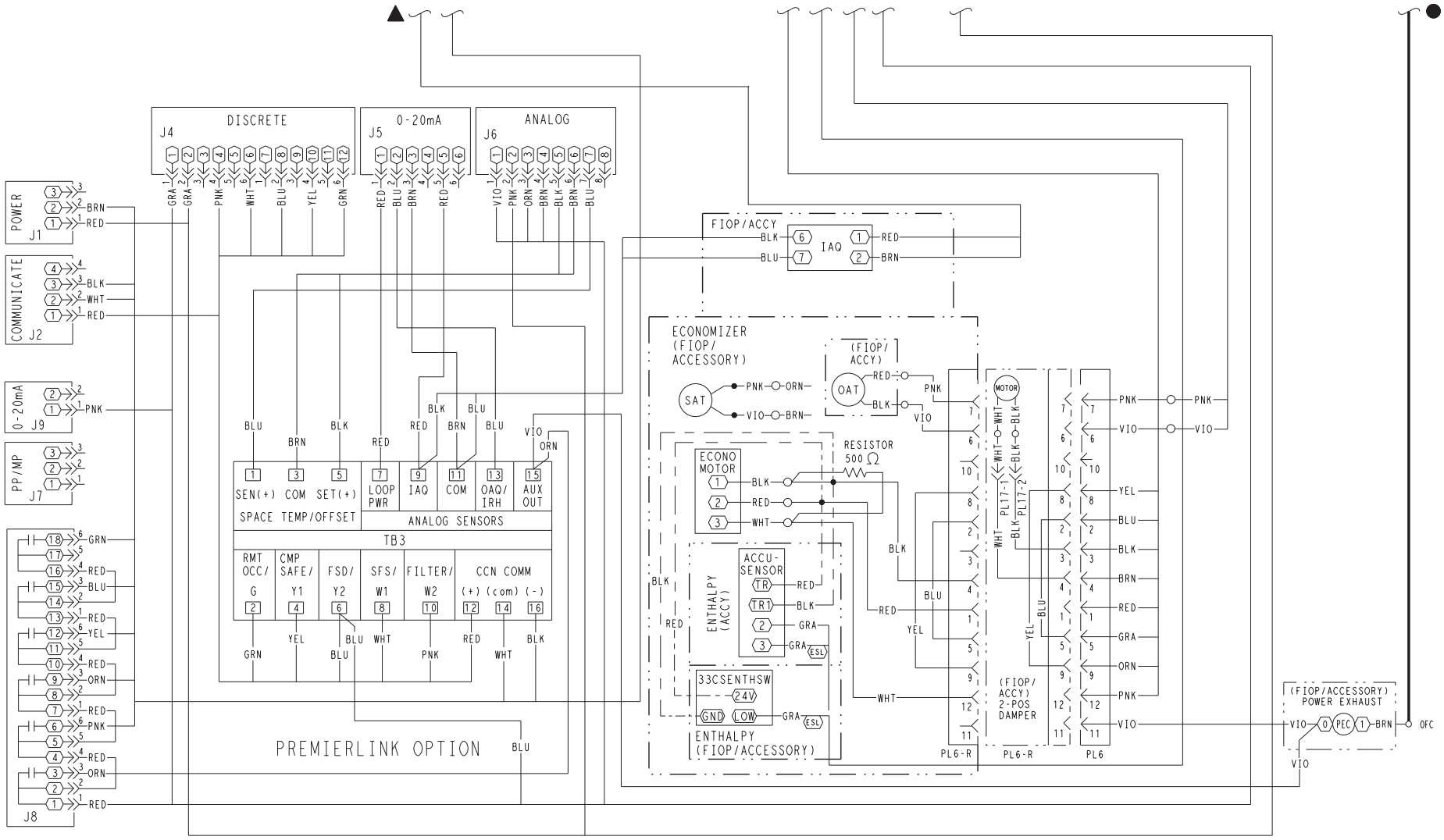

Fig. 45 - Typical PremierLink™ System Control Wiring Diagram

Table 15 – Thermistor Resistance vs Temperature Values for Space Temperature Sensor, Supply Air Temperature Sensor, and Outdoor Air Temperature Sensor

TEMP (C)	TEMP (F)	RESISTANCE (Ohms)
–40	–40	335,651
–35	–31	242,195
–30	–22	176,683
–25	–13	130,243
–20	–4	96,974
–15	5	72,895
–10	14	55,298
–5	23	42,315
0	32	32,651
5	41	25,395
10	50	19,903
15	59	15,714
20	68	12,494
25	77	10,000
30	86	8,056
35	95	6,530
40	104	5,325
45	113	4,367
50	122	3,601
55	131	2,985
60	140	2,487
65	149	2,082
70	158	1,752

NOTE: The sensor must be mounted in the discharge airstream downstream of the cooling coil and any heating devices. Be sure the probe tip does not come in contact with any of the unit's heater surfaces.

Outdoor Air Temperature (OAT) Sensor

The OAT is factory-mounted in the EconoMi$er 2 (FIOP or accessory). It is a nominal 10k ohm thermistor attached to an eyelet mounting ring. The OAT wiring passes through the PL6 plug. See Table 15 for temperature-resistance characteristic.

EconoMi$er 2

The PremierLink™ control is used with EconoMi$er 2 (option or accessory) for outdoor air management. The damper position is controlled directly by the PremierLink control; EconoMi$er 2 has no internal logic device.

Outdoor air management functions can be enhanced with field-installation of these accessory control devices:

- Enthalpy control (outdoor air or differential sensors)
- Space CO_2 sensor
- Outdoor air CO_2 sensor

Refer to Table 16 for accessory part numbers.

Field Connections

Field connections for accessory sensor and input devices are made at the 16-pole terminal block (TB1) located on the control box bottom shelf in front of the PremierLink control. Some input devices also require a 24-vac signal source; connect at LCTB terminal R at "THERMOSTAT" connection strip for this signal source. See connections figures on following pages for field connection locations (and for continued connections at the PremierLink board inputs).

Table 17 provides a summary of field connections for units equipped with Space Sensor. Table 18 provides a summary of field connections for units equipped with Space Thermostat.

Space Sensors

The PremierLink controller is factory-shipped configured for Space Sensor Mode. A Carrier T-55 or T-56 space sensor must be used. T-55 space temperature sensor provides a signal of space temperature to the PremierLink control T-56 provides same space temperature signal plus it allows for adjustment of space temperature setpoints from the face of the sensor by the occupants. See Table 15 for temperature versus resistance characteristic on the space sensors.

Connect T-55

See Fig. 46 for typical T-55 internal connections. Connect the T-55 SEN terminals to TB1 terminals 1 and 3. (See Fig. 47.)

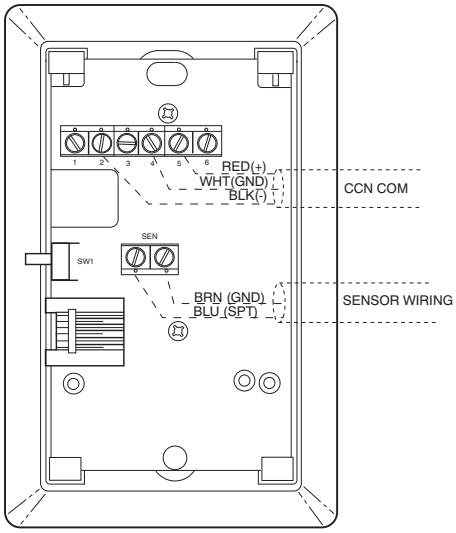

C08201

Fig. 46 - T-55 Space Temperature Sensor Wiring

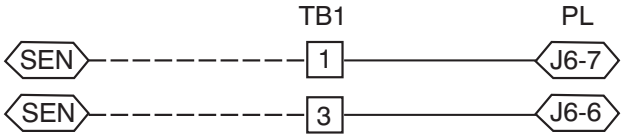

C08212

Fig. 47 - PremierLink T-55 Sensor

Table 16 – PremierLink™ Sensor Usage

APPLICATION	OUTDOOR AIR TEMPERATURE SENSOR	RETURN AIR TEMPERATURE SENSOR	OUTDOOR AIR ENTHALPY SENSOR	RETURN AIR ENTHALPY SENSOR
Differential Dry Bulb Temperature with PremierLink (PremierLink requires 4–20 mA Actuator)	Included – CRTEMPSN001A00	Required – 33ZCT55SPT or equivalent	–	–
Single Enthalpy with PremierLink (PremierLink requires 4–20mA Actuator)	Included – Not Used	–	Requires – HH57AC077 or equivalent	–
Differential Enthalpy with PremierLink (PremierLink requires 4–20mA Actuator)	Included – Not Used	–	Requires – HH57AC077 or equivalent	Requires – HH57AC078 or equivalent

NOTES:
CO_2 Sensors (Optional):
33ZCSENCO2 – Room sensor (adjustable). Aspirator box is required for duct mounting of the sensor.
33ZCASPCO2 – Aspirator box used for duct–mounted CO_2 room sensor.
33ZCT55CO2 – Space temperature and CO_2 room sensor with override.
33ZCT56CO2 – Space temperature and CO_2 room sensor with override and setpoint.

Table 17 – Space Sensor Mode

TB1 TERMINAL	FIELD CONNECTION	INPUT SIGNAL
1	T55–SEN/T56–SEN	Analog (10k thermistor)
2	RMTOCC	Discrete, 24VAC
3	T55–SEN/T56–SEN	Analog (10k thermistor)
4	CMPSAFE	Discrete, 24VAC
5	T56–SET	Analog (10k thermistor)
6	FSD	Discrete, 24VAC
7	LOOP–PWR	Analog, 24VDC
8	SPS	Discrete, 24VAC
9	IAQ–SEN	Analog, 4–20mA
10	FILTER	Discrete, 24VAC
11	IAQ–COM/OAQ–COM/RH–COM	Analog, 4–20mA
12	CCN + (RED)	Digital, , 5VDC
13	OAQ–SEN/RH–SEN	Analog, 4–20mA
14	CCN Gnd (WHT)	Digital, 5VDC
15	AUX OUT(Power Exhaust)	(Output)Discrete 24VAC
16	CCN – (BLK)	Digital, 5VDC

LEGEND:
T55 – Space Temperature Sensor
T56 – Space Temperature Sensor
CCN – Carrier Comfort Network (communication bus)
CMPSAFE – Compressor Safety
FILTER – Dirty Filter Switch
FSD – Fire Shutdown
IAQ – Indoor Air Quality (CO_2)
OAQ – Outdoor Air Quality (CO_2)
RH – Relative Humidity
SFS – Supply Fan Status

Table 18 – Thermostat Mode

TB1 TERMINAL	FIELD CONNECTION	INPUT SIGNAL
1	RAT SEN	Analog (10k thermistor)
2	G	Discrete, 24VAC
3	RAT SEN	Analog (10k thermistor)
4	Y1	Discrete, 24VAC
5		
6	Y2	Discrete, 24VAC
7	LOOP–PWR	Analog, 24VDC
8	W1	Discrete, 24VAC
9	IAQ–SEN	Analog, 4–20mA
10	W2	Discrete, 24VAC
11	IAQ–COM/OAQ–COM/RH–COM	Analog, 4–20mA
12	CCN + (RED)	Digital, 5VDC
13	OAQ–SEN/RH–SEN	Analog, 4–20mA
14	CCN Gnd (WHT)	Digital, 5VDC
15	AUX OUT (Power Exhaust)	(Output) Discrete 24VAC
16	CCN – (BLK)	Digital, 5VDC

LEGEND:

CCN – Carrier Comfort Network (communication bus)
G – Thermostat Fan
IAQ – Indoor Air Quality (CO_2)
OAQ – Outdoor Air Quality (CO_2)
RAT – Return Air Temperature
RH – Relative Humidity
W1 – Thermostat Heat Stage 1
W2 – Thermostat Heat Stage 2
Y1 – Thermostat Cool Stage 1
Y2 – Thermostat Cool Stage 2

48TC

Connect T-56

See Fig. 48 for T-56 internal connections. Install a jumper between SEN and SET terminals as illustrated. Connect T-56 terminals to TB1 terminals 1, 3, and 5. (See Fig. 49.)

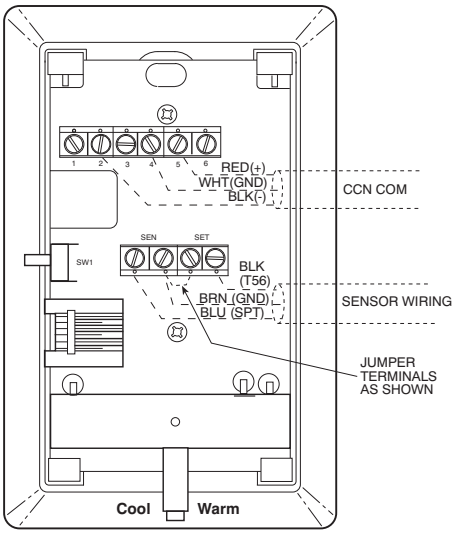

Fig. 48 - T-56 Internal Connections

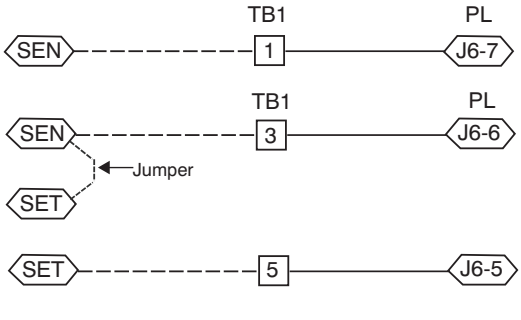

Fig. 49 - PremierLink T-56 Sensor

Connect Thermostat

A 7-wire thermostat connection requires a 24-v power source and a common connection. Use the R and C terminals on the LCTB's THERMOSTAT connection strip for these. Connect the thermostat's Y1, Y2, W1, W2 and G terminals to PremierLink TB1 as shown in Fig. 50.

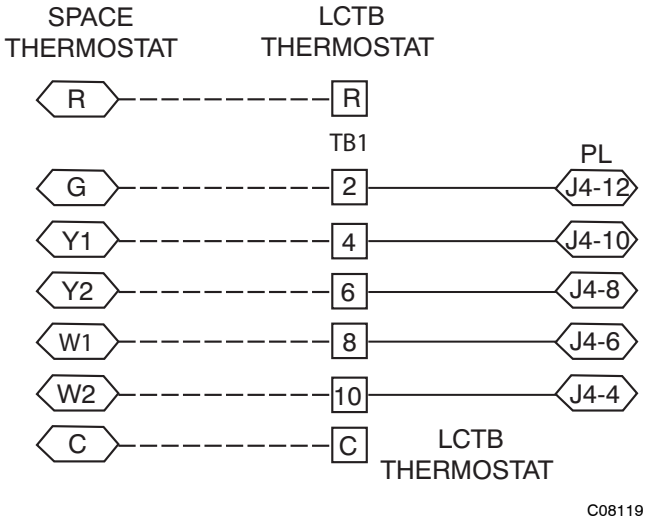

Fig. 50 - Space Thermostat Connections

If the 48TC unit has an economizer system and free-cooling operation is required, a sensor representing Return Air Temperature must also be connected (field-supplied and installed). This sensor may be a T-55 Space Sensor (see Fig. 46) installed in the space or in the return duct, or it may be sensor PNO 33ZCSENSAT, installed in the return duct. Connect this sensor to TB1-1 and TB1-3 per Fig. 47. Temperature-resistance characteristic is found in Table 15.

Configure the Unit for Thermostat Mode

Connect to the CCN bus using a CCN service tool and navigate to PremierLink Configuration screen for Operating Mode. Default setting is Sensor Mode (value 1). Change the value to 0 to reconfigure the controller for Thermostat Mode.

When the PremierLink is configured for Thermostat Mode, these functions are not available: Fire Shutdown (FSD), Remote Occupied (RMTOCC), Compressor Safety (CMPSAFE), Supply Fan Status (SFS), and Filter Pressure Switch (FILTER).

Economizer Controls

Outdoor Air Enthalpy Control (PNO HH57AC077)

The enthalpy control (HH57AC077) is available as a field-installed accessory to be used with the EconoMi$er2 damper system. The outdoor air enthalpy sensor is part of the enthalpy control. (The separate field-installed accessory return air enthalpy sensor (HH57AC078) is required for differential enthalpy control.) (See Fig. 52.)

Locate the enthalpy control in the economizer hood. Locate two GRA leads in the factory harness and connect these leads to enthalpy control sensors 2 and 3. (See Fig. 51.) Connect the enthalpy control power input terminals to economizer actuator power leads RED (connect to TR) and BLK (connect to TR1).

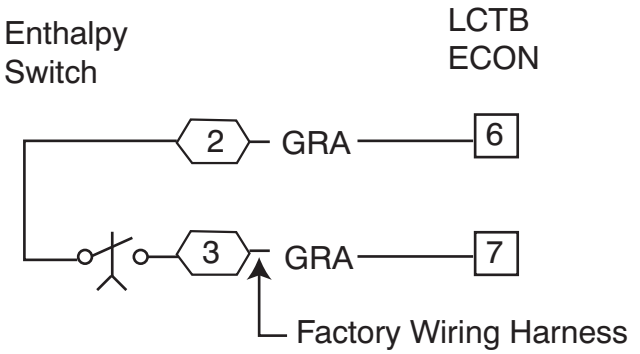

C08218

Fig. 51 - Enthalpy Switch (HH57AC077) Connections

The outdoor enthalpy changeover setpoint is set at the enthalpy controller.

The enthalpy control receives the outdoor air enthalpy from the outdoor air enthalpy sensor and provides a dry contact switch input to the PremierLink™ controller. A closed contact indicates that outside air is preferred to the return air. An open contact indicates that the economizer should remain at minimum position.

Differential Enthalpy Control

Differential enthalpy control is provided by sensing and comparing the outside air and return air enthalpy conditions. Install the outdoor air enthalpy control as described above. Add and install a return air enthalpy sensor.

Return Air Enthalpy Sensor

Mount the return-air enthalpy sensor (HH57AC078) in the return-air duct. The return air sensor is wired to the enthalpy controller (HH57AC077). (See Fig. 52.)

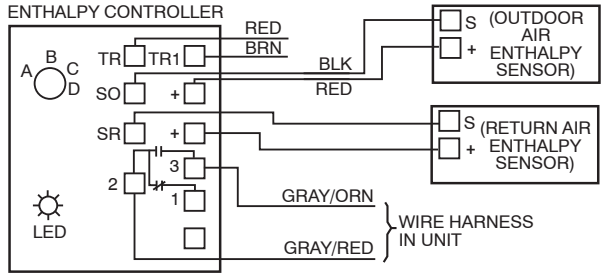

NOTES:
1. Remove factory-installed jumper across SR and + before connecting wires from return air sensor.
2. Switches shown in high outdoor air enthalpy state. Terminals 2 and 3 close on low outdoor air enthalpy relative to indoor air enthalpy.
3. Remove sensor mounted on back of control and locate in outside air-stream.

C06019

Fig. 52 - Outside and Return Air Enthalpy Sensor Wiring

To wire the return air enthalpy sensor, perform the following:

1. Use a 2-conductor, 18 or 20 AWG, twisted pair cable to connect the return air enthalpy sensor to the enthalpy controller.
2. At the enthalpy control remove the factory-installed resistor from the (SR) and (+) terminals.
3. Connect the field-supplied RED wire to (+) spade connector on the return air enthalpy sensor and the (SR+) terminal on the enthalpy controller. Connect the BLK wire to (S) spade connector on the return air enthalpy sensor and the (SR) terminal on the enthalpy controller.

NOTE: The enthalpy control must be set to the "D" setting for differential enthalpy control to work properly.

The enthalpy control receives the indoor and return enthalpy from the outdoor and return air enthalpy sensors and provides a dry contact switch input to the PremierLink controller. A closed contact indicates that outside air is preferred to the return air. An open contact indicates that the economizer should remain at minimum position.

Indoor Air Quality (CO_2 Sensor)

The indoor air quality sensor accessory monitors space carbon dioxide (CO_2) levels. This information is used to monitor IAQ levels. Several types of sensors are available, for wall mounting in the space or in return duct, with and without LCD display, and in combination with space temperature sensors. Sensors use infrared technology to measure the levels of CO_2 present in the space air.

The CO_2 sensors are all factory set for a range of 0 to 2000 ppm and a linear mA output of 4 to 20. Refer to the instructions supplied with the CO_2 sensor for electrical requirements and terminal locations. See Fig. 53 for typical CO_2 sensor wiring schematic.

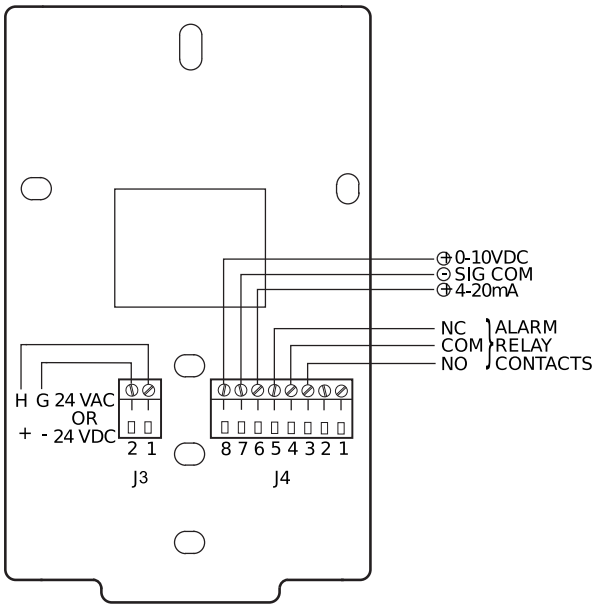

Fig. 53 - Indoor/Outdoor Air Quality (CO_2) Sensor (33ZCSENCO2) - Typical Wiring Diagram

To accurately monitor the quality of the air in the conditioned air space, locate the sensor near a return-air grille (if present) so it senses the concentration of CO_2 leaving the space. The sensor should be mounted in a location to avoid direct breath contact.

Do not mount the IAQ sensor in drafty areas such as near supply ducts, open windows, fans, or over heat sources. Allow at least 3 ft (0.9 m) between the sensor and any corner. Avoid mounting the sensor where it is influenced by the supply air; the sensor gives inaccurate readings if the supply air is blown directly onto the sensor or if the supply air does not have a chance to mix with the room air before it is drawn into the return airstream.

Wiring the Indoor Air Quality Sensor

For each sensor, use two 2-conductor 18 AWG (American Wire Gauge) twisted-pair cables (unshielded) to connect the separate isolated 24 vac power source to the sensor and to connect the sensor to the control board terminals.

To connect the sensor to the control, identify the positive (4 to 20 mA) and ground (SIG COM) terminals on the sensor. (See Fig. 53.) Connect the 4-20 mA terminal to terminal TB1-9 and connect the SIG COM terminal to terminal TB1-11. (See Fig. 54.)

Refer to the Rooftop PremierLink Installation, Start-Up, and Configuration Instructions (Form 33CS-58SI), PremierLink Installation, Start-up, and Configuration Instructions, for detailed configuration information.

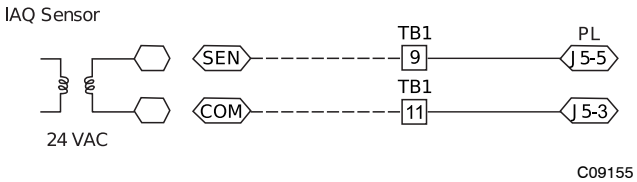

Fig. 54 - Indoor CO_2 Sensor (33ZCSENCO2) Connections

Outdoor Air Quality Sensor (PNO 33ZCSENCO2) Plus Weatherproof Enclosure

The outdoor air CO_2 sensor is designed to monitor carbon dioxide (CO_2) levels in the outside ventilation air and interface with the ventilation damper in an HVAC system. The OAQ sensor is packaged with an outdoor cover. See Fig. 55. The outdoor air CO_2 sensor must be located in the economizer outside air hood.

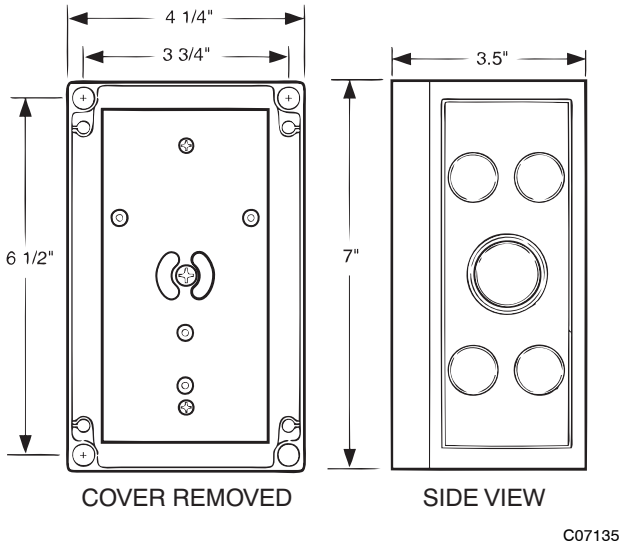

Fig. 55 - Outdoor Air Quality Sensor Cover

Wiring the Outdoor Air CO_2 Sensor

A dedicated power supply is required for this sensor. A two-wire cable is required to wire the dedicated power supply for the sensor. The two wires should be connected to the power supply and terminals 1 and 2.

To connect the sensor to the control, identify the positive (4 to 20 mA) and ground (SIG COM) terminals on the OAQ sensor. (See Fig. 53.) Connect the 4 to 20 mA terminal to 48TC's terminal TB1-13. Connect the SIG COM terminal to 48TC's terminal TB1-11. (See Fig. 56.)

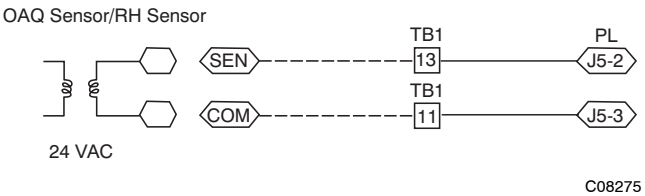

Fig. 56 - Outdoor CO_2 Sensor Connections

48TC

Refer to the Rooftop PremierLink™ Installation, Start-Up, and Configuration Instructions (Form 33CS-58SI), PremierLink Installation, Start-up, and Configuration Instructions, for detailed configuration information.

Smoke Detector/Fire Shutdown (FSD)

This function is available only when PremierLink is configured for (Space) Sensor Mode. The unit is factory-wired for PremierLink FSD operation when PremierLink is factory-installed.

On 48TC units equipped with factory-installed Smoke Detector(s), the smoke detector controller implements the unit shutdown through its NC contact set connected to the unit's LCTB input. The FSD function is initiated via the smoke detector's Alarm NO contact set. The PremierLink communicates the smoke detector's tripped status to the CCN building control. See Fig. 25 for unit smoke detector wiring.

Alarm state is reset when the smoke detector alarm condition is cleared and reset at the smoke detector in the unit.

Filter Status Switch

This function is available only when PremierLink is configured for (Space) Sensor Mode.

PremierLink control can monitor return filter status in two ways: By monitoring a field-supplied/installed filter pressure switch or via supply fan runtime hours.

Using Switch Input

Install the dirty filter pressure switch according to switch manufacturer's instructions, to measure pressure drop across the unit's return filters. Connect one side of the switch's NO contact set to LCTB's THERMOSTAT-R terminal. Connect the other side of the NO contact set to TB1-10. Setpoint for Dirty Filter is set at the switch. (See Fig. 57.)

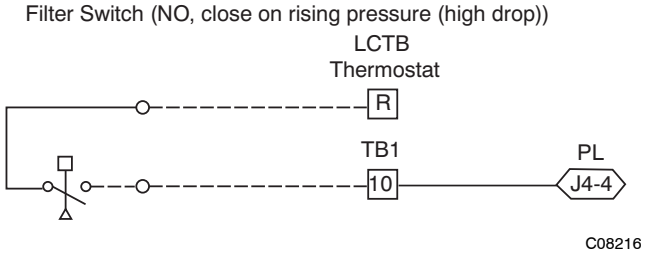

Fig. 57 - PremierLink Filter Switch Connection

When the filter switch's NO contact set closes as filter pressure drop increases (indicating dirt-laden filters), the input signal to PremierLink causes the filter status point to read "DIRTY".

Using Filter Timer Hours

Refer to the Rooftop PremierLink Installation, Start-Up, and Configuration Instructions (Form 33CS-58SI) for instructions on using the PremierLink Configuration screens and on unit alarm sequence.

Supply Fan Status Switch

The PremierLink control can monitor supply fan operation through a field-supplied/installed differential pressure switch. This sequence will prevent (or interrupt) operation of unit cooling, heating and economizer functions until the pressure switch contacts are closed indicating proper supply fan operation.

Install the differential pressure switch in the supply fan section according to switch manufacturer's instructions. Arrange the switch contact to be open on no flow and to close as pressure rises indicating fan operation.

Connect one side of the switch's NO contact set to LCTB's THERMOSTAT-R terminal. Connect the other side of the NO contact set to TB1-8. Setpoint for Supply Fan Status is set at the switch. (See Fig. 58.)

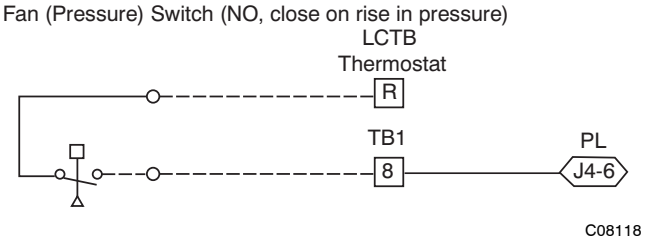

Fig. 58 - PremierLink Wiring Fan Pressure Switch Connection

Remote Occupied Switch

The PremierLink control permits a remote timeclock to override the control's on-board occupancy schedule and place the unit into Occupied mode. This function may also provide a "Door Switch" time delay function that will terminate cooling and heating functions after a 2-20 minute delay.

Connect one side of the NO contact set on the timeclock to LCTB's THERMOSTAT-R terminal. Connect the other side of the timeclock contact to the unit's TB1-2 terminal. (See Fig. 59.)

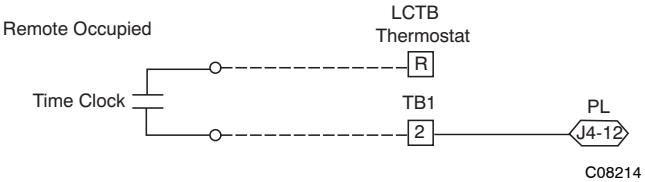

Fig. 59 - PremierLink Wiring Remote Occupied

Refer to the Rooftop PremierLink Installation, Start-Up, and Configuration Instructions (Form 33CS-58SI) for additional information on configuring the PremierLink control for Door Switch timer function.

Power Exhaust (output)

Connect the accessory Power Exhaust contactor coils(s) per Fig. 60.

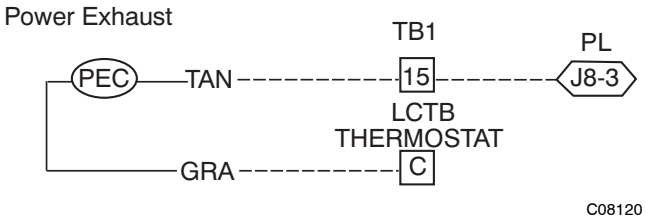

Fig. 60 - PremierLink™ Power Exhaust Output Connection

Space Relative Humidity Sensor

The RH sensor is not used with 48TC models at this time.

CCN Communication Bus

The PremierLink controller connects to the bus in a daisy chain arrangement. Negative pins on each component must be connected to respective negative pins, and likewise, positive pins on each component must be connected to respective positive pins. The controller signal pins must be wired to the signal ground pins. Wiring connections for CCN must be made at the 3-pin plug.

At any baud (9600, 19200, 38400 baud), the number of controllers is limited to 239 devices maximum. Bus length may not exceed 4000 ft (1219m), with no more than 60 total devices on any 1000-ft (305m) section. Optically isolated RS-485 repeaters are required every 1000 ft (305m).

NOTE: Carrier device default is 9600 baud.

Communication Bus Wire Specifications

The CCN Communication Bus wiring is field-supplied and field-installed. It consists of shielded 3-conductor cable with drain (ground) wire. The cable selected must be identical to the CCN Communication Bus wire used for the entire network.

See Table 19 for recommended cable.

Table 19 – Recommended Cables

MANUFACTURER	CABLE PART NO.
Alpha	2413 or 5463
American	A22503
Belden	8772
Columbia	02525

NOTE: Conductors and drain wire must be at least 20 AWG, stranded, and tinned copper. Individual conductors must be insulated with PVC, PVC/nylon, vinyl, Teflon, or polyethylene. An aluminum/polyester 100% foil shield and an outer jacket of PVC, PVC/nylon, chrome vinyl, or Teflon with a minimum operating temperature range of -20°C to 60°C is required. Do not run communication wire in the same conduit as or next to any AC voltage wiring.

The communication bus shields must be tied together at each system element. If the communication bus is entirely within one building, the resulting continuous shield must be connected to ground at only one single point. If the communication bus cable exits from one building and enters another building, the shields must be connected to the grounds at a lightning suppressor in each building (one point only).

Connecting CCN Bus

NOTE: When connecting the communication bus cable, a color code system for the entire network is recommended to simplify installation and checkout. See Table 20 for the recommended color code.

Table 20 – Color Code Recommendations

SIGNAL TYPE	CCN BUS WIRE COLOR	CCN PLUG PIN NUMBER
+	Red	1
Ground	White	2
–	Black	3

Connect the CCN (+) lead (typically RED) to the unit's TB1-12 terminal. Connect the CCN (ground) lead (typically WHT) to the unit's TB1-14 terminal. Connect the CCN (-) lead (typically BLK) to the unit's TB1-16 terminal. (See Fig. 61.)

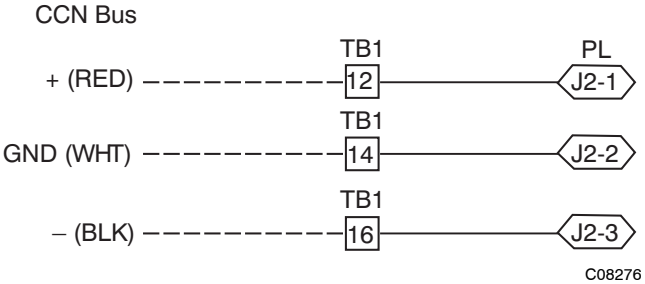

Fig. 61 - PremierLink CCN Bus Connections

RTU-MP CONTROL SYSTEM

The RTU-MP controller, see Fig. 62, provides expanded stand-alone operation of the HVAC system plus connection and control through communication with several Building Automation Systems (BAS) through popular third-party network systems. The available network systems are BACnet MP/TP, Modbus and Johnson J2. Communication with LonWorks is also possible by adding an accessory interface card to the RTU-MP. Selection of the communication protocol and baud rate are made at on-board DIP switches.

Carrier's diagnostic display tools BACviewer6 Handheld and Virtual BACview (loaded on a portable PC) must be used with the RTU-MP controller. Connection to the RTU-MP board is at the J12 access port. (See Fig. 62.)

The RTU-MP control is factory-mounted in the 48TC unit's main control box, to the left of the LCTB. (See Fig. 63.) Factory wiring is completed through harnesses connected to the LCTB. Field connections for RTU-MP sensors will be made at the Phoenix connectors on the RTU-MP board. The factory-installed RTU-MP control includes the supply-air temperature (SAT) sensor. The outdoor air temperature (OAT) sensor is included in the FIOP/accessory EconoMi$er 2 package.

Refer to Table 21, RTU-MP Controller Inputs and Outputs, for locations of all connections to the RTU-MP board.

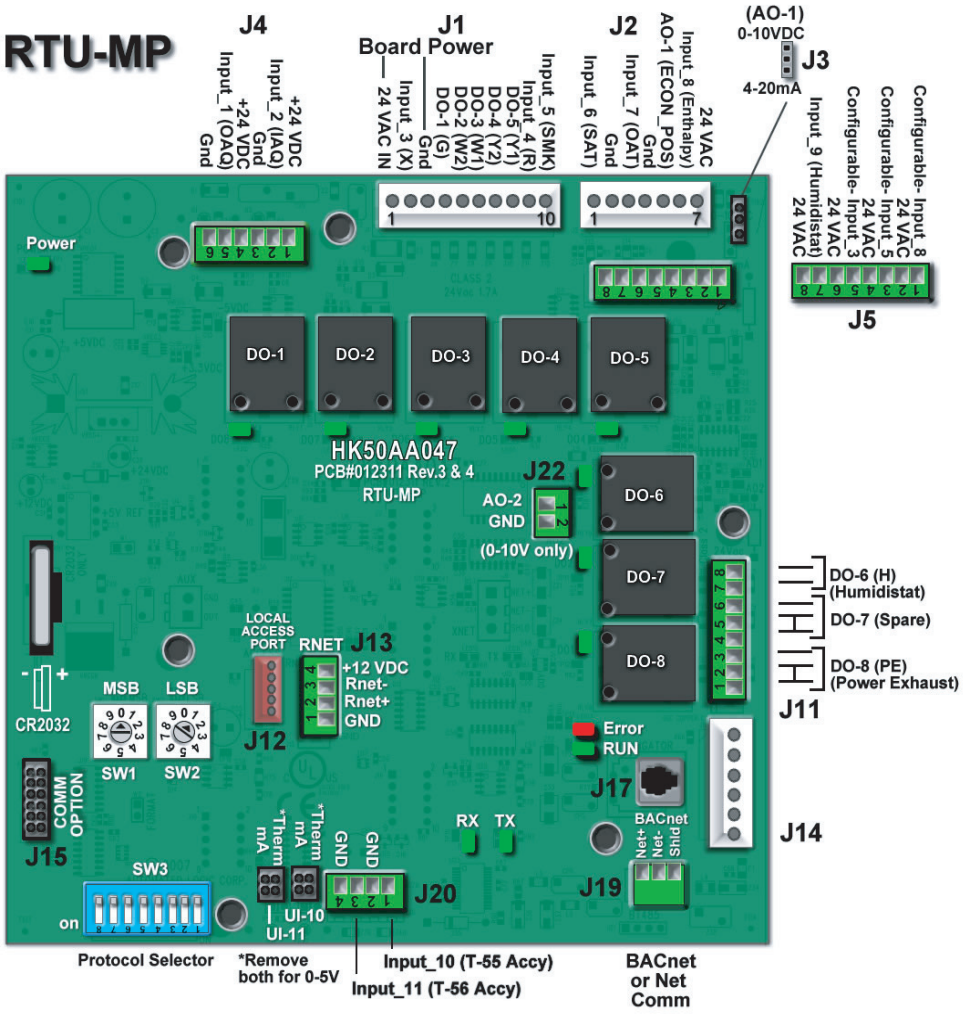

C07129

Fig. 62 - RTU-MP Multi-Protocol Control Board

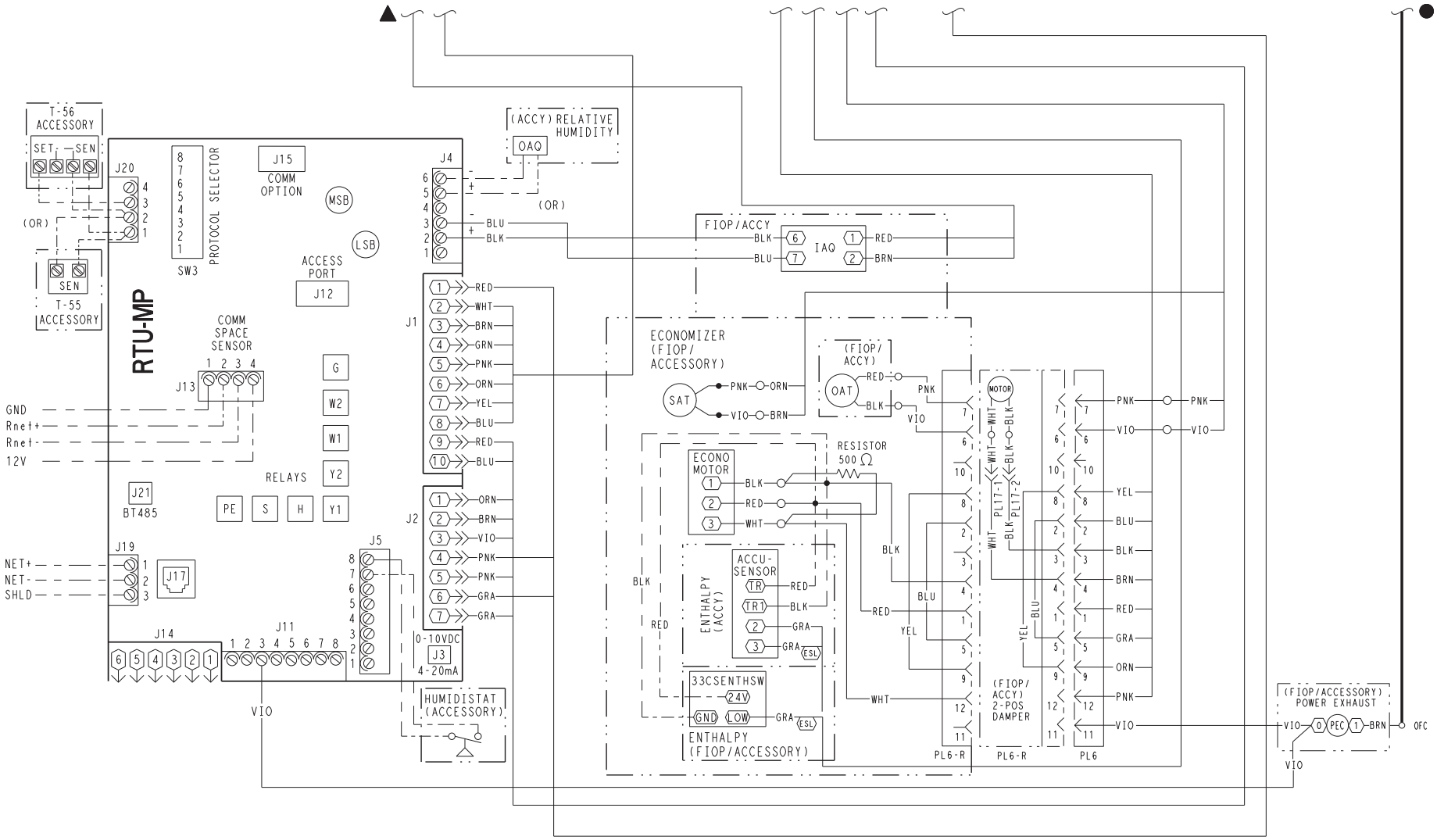

C09507

Fig. 63 - Typical RTU-MP System Control Wiring Diagram

Table 21 – RTU-MP Controller Inputs and Outputs

POINT NAME	BACnet OBJECT NAME	TYPE OF I/O	CONNECTION PIN NUMBERS
INPUTS			
Space Temperature Sensor	sptsens	AI (10K Thermistor)	J20–1, 2
Supply Air Temperature	sat	AI (10K Thermistor)	J2–1, 2
Local Outside Air Temperature Sensor	oatsens	AI (10K Thermistor)	J2–3, 4
Space Temperature Offset Pot	sptopot	AI (100K Potentiometer)	J20–3
Indoor Air Quality	iaq	AI (4–20 ma)	J4–2, 3
Outdoor Air Quality	oaq	AI (4–20 ma)	J4–5, 6
Safety Chain Feedback	safety	DI (24 VAC)	J1–9
Compressor Safety	compstat	DI (24 VAC)	J1–2
Fire Shutdown	firedown	DI (24 VAC)	J1–10
Enthalpy Switch	enthalpy	DI (24 VAC)	J2–6, 7
Humidistat Input Status	humstat	DI (24 VAC)	J5–7, 8
CONFIGURABLE INPUTS*			
Space Relative Humidity	sprh	AI (4–20 ma)	J4–2,3 or J4–5,6
Outside Air Relative Humidity	oarh	AI (4–20 ma)	
Supply Fan Status	fanstat	DI (24 VAC)	J5–1,2 or J5–3,4 or J5 5,6 or J5–7,8
Filter Status	filtstat	DI (24 VAC)	
Remote Occupancy Input	remocc	DI (24 VAC)	
OUTPUTS			
Economizer Commanded Position	econocmd	4–20ma	J2–5
Supply Fan Relay State	sf	DO Relay (24VAC , 1A)	J1–4
Compressor 1 Relay State	comp_1	DO Relay (24VAC , 1A)	J1–8
Compressor 2 Relay State	comp_2	DO Relay (24VAC , 1A)	J1–7
Heat Stage 1 Relay State	heat_1	DO Relay (24VAC , 1A)	J1–6
Heat Stage 2 Relay State	heat_2	DO Relay (24VAC , 1A)	J1–5
Power Exhaust Relay State	aux_2	DO Relay (24VAC , 1A)	J11–3
Dehumidification Relay State	humizer	DO Relay (24VAC, 1A)	J11–7, 8

LEGEND
AI – Analog Input
AO – Analog Output
DI – Discrete Input
DO – Discrete Output
* These inputs (if installed) take the place of the default input on the specific channel according to schematic.
Parallel pins J5–1 = J2–6, J5–3 = J1–10, J5–5 = J1–2 are used for field–installation.
Refer to the input configuration and accessory sections for more detail.

NOTE: Refer to RTU-MP Controls, Start-Up, Operation, and Troubleshooting Instructions (Form 48-50H-T-2T) for complete configuration of RTU-MP, operating sequences and troubleshooting information. Refer to RTU-MP 3rd Party Integration Guide for details on configuration and troubleshooting of connected networks. Have a copy of these manuals available at unit start-up.

The RTU-MP controller requires the use of a Carrier space sensor. A standard thermostat cannot be used with the RTU-MP system.

Supply Air Temperature (SAT) Sensor

On FIOP-equipped 48TC unit, the unit is supplied with a supply-air temperature (SAT) sensor (33ZCSENSAT). This sensor is a tubular probe type, approx 6-inches (12.7 mm) in length. It is a nominal 10-k ohm thermistor. See Table 15 for temperature-resistance characteristic.

The SAT is factory-wired. The SAT probe is mounted in the fan deck. (See Fig. 44.) It can be removed or remounted per local codes. Drill or punch a 1/2-in. hole in the flange or duct. Use two field-supplied, self-drilling screws to secure the sensor probe in a horizontal orientation. Insure that the sensor wires do not contact the hot surface of the heat exchanger.

Outdoor Air Temperature (OAT) Sensor

The OAT is factory-mounted in the EconoMi$er 2 (FIOP or accessory). It is a nominal 10k ohm thermistor attached to an eyelet mounting ring. See Table 15 for temperature-resistance characteristic.

EconoMi$er2

The RTU-MP control is used with EconoMi$er2 (option or accessory) for outdoor air management. The damper position is controlled directly by the RTU-MP control; EconoMi$er 2 has no internal logic device.

Outdoor air management functions can be enhanced with field-installation of these accessory control devices:

- Enthalpy control (outdoor air or differential sensors)
- Space CO_2 sensor
- Outdoor air CO_2 sensor

Field Connections

Field connections for accessory sensors and input devices are made the RTU-MP, at plugs J1, J2, J4, J5, J11 and J20. All field control wiring that connects to the RTU-MP must be routed through the raceway built into the corner post as shown in Fig. 37. The raceway provides the UL required clearance between high- and low-voltage wiring. Pass the control wires through the hole provided in the corner post, then feed the wires thorough the raceway to the RTU-MP. Connect to the wires to the removable Phoenix connectors and then reconnect the connectors to the board.

Space Temperature (SPT) Sensors

A field-supplied Carrier space temperature sensor is required with the RTU-MP to monitor space temperature. There are 3 sensors available for this application:

- 33ZCT55SPT, space temperature sensor with override button
- 33ZCT56SPT, space temperature sensor with override button and setpoint adjustment
- 33ZCT59SPT, space temperature sensor with LCD (liquid crystal display) screen, override button, and setpoint adjustment

Use 20 gauge wire to connect the sensor to the controller. The wire is suitable for distances of up to 500 ft. Use a three-conductor shielded cable for the sensor and setpoint adjustment connections. If the setpoint adjustment (slidebar) is not required, then an unshielded, 18 or 20 gauge, two-conductor, twisted pair cable may be used.

Connect T-55

See Fig. 46 for typical T-55 internal connections. Connect the T-55 SEN terminals to RTU-MP J20-1 and J20-2. (See Fig. 64.)

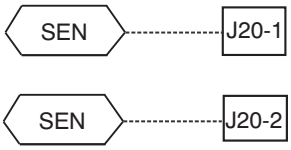

C08460

Fig. 64 - RTU-MP T-55 Sensor Connections

Connect T-56

See Fig. 48 for T-56 internal connections. Install a jumper between SEN and SET terminals as illustrated. Connect T-56 terminals to RTU-MP J20-1, J20-2 and J20-3 per Fig. 65.

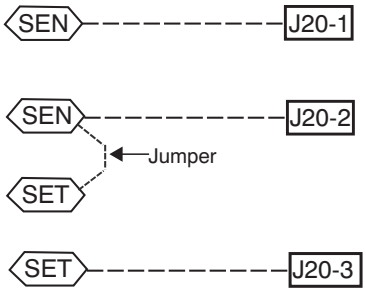

C08461

Fig. 65 - RTU-MP T-56 Sensor Connections

Connect T-59

The T-59 space sensor requires a separate, isolated power supply of 24 VAC. See Fig. 66 for internal connections at the T-59. Connect the SEN terminal (BLU) to RTU-MP J20-1. Connect the COM terminal (BRN) to J20-2. Connect the SET terminal (STO or BLK) to J20-3.

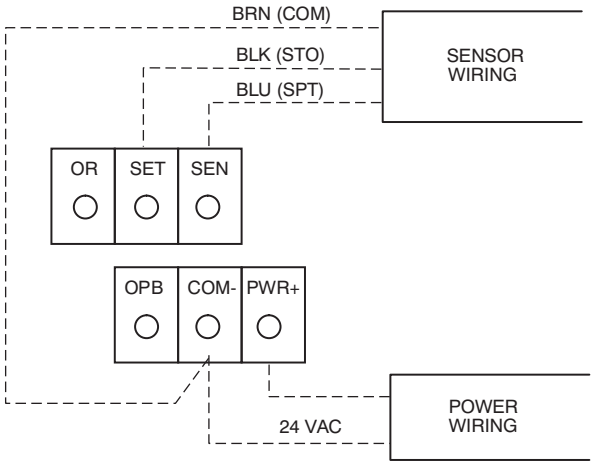

NOTE: Must use a separate isolated transformer.

C07132

Fig. 66 - Space Temperature Sensor Typical Wiring (33ZCT59SPT)

Economizer Controls

Outdoor Air Enthalpy Control (PNO HH57AC077)

The enthalpy control (HH57AC077) is available as a field-installed accessory to be used with the EconoMi$er2 damper system. The outdoor air enthalpy sensor is part of the enthalpy control. (The separate field-installed accessory return air enthalpy sensor (HH57AC078) is required for differential enthalpy control. See next section.)

Locate the enthalpy control in the economizer hood. Locate two GRA leads in the factory harness and connect these leads to enthalpy control sensors 2 and 3. (See Fig. 51.) Connect the enthalpy control power input terminals to economizer actuator power leads RED (connect to TR) and BLK (connect to TR1).

The outdoor enthalpy changeover setpoint is set at the enthalpy controller.

The enthalpy control receives the outdoor air enthalpy from the outdoor air enthalpy sensor and provides a dry contact switch input to the RTU-MP controller. A closed contact indicates that outside air is preferred to the return air. An open contact indicates that the economizer should remain at minimum position.

Differential Enthalpy Control

Differential enthalpy control is provided by sensing and comparing the outside air and return air enthalpy conditions. Install the outdoor air enthalpy control as described above. Add and install a return air enthalpy sensor.

Return Air Enthalpy Sensor

Mount the return-air enthalpy sensor (HH57AC078) in the return-air duct. The return air sensor is wired to the enthalpy controller (HH57AC077). (See Fig. 52.)

To wire the return air enthalpy sensor, perform the following:

1. Use a 2-conductor, 18 or 20 AWG, twisted pair cable to connect the return air enthalpy sensor to the enthalpy controller.
2. At the enthalpy control remove the factory-installed resistor from the (SR) and (+) terminals.
3. Connect the field-supplied RED wire to (+) spade connector on the return air enthalpy sensor and the (SR+) terminal on the enthalpy controller. Connect the BLK wire to (S) spade connector on the return air enthalpy sensor and the (SR) terminal on the enthalpy controller.

NOTE: The enthalpy control must be set to the "D" setting for differential enthalpy control to work properly.

The enthalpy control receives the indoor and return enthalpy from the outdoor and return air enthalpy sensors and provides a dry contact switch input to the RTU-MP controller. A closed contact indicates that outside air is preferred to the return air. An open contact indicates that the economizer should remain at minimum position.

Indoor Air Quality (CO_2 Sensor)

The indoor air quality sensor accessory monitors space carbon dioxide (CO_2) levels. This information is used to monitor IAQ levels. Several types of sensors are available, for wall mounting in the space or in return duct, with and without LCD display, and in combination with space temperature sensors. Sensors use infrared technology to measure the levels of CO_2 present in the space air.

The CO_2 sensors are all factory set for a range of 0 to 2000 ppm and a linear mA output of 4 to 20. Refer to the instructions supplied with the CO_2 sensor for electrical requirements and terminal locations. See Fig. 53 for typical CO_2 sensor wiring schematic.

To accurately monitor the quality of the air in the conditioned air space, locate the sensor near a return-air grille (if present) so it senses the concentration of CO_2 leaving the space. The sensor should be mounted in a location to avoid direct breath contact.

Do not mount the IAQ sensor in drafty areas such as near supply ducts, open windows, fans, or over heat sources. Allow at least 3 ft (0.9 m) between the sensor and any corner. Avoid mounting the sensor where it is influenced by the supply air; the sensor gives inaccurate readings if the supply air is blown directly onto the sensor or if the supply air does not have a chance to mix with the room air before it is drawn into the return airstream.

Wiring the Indoor Air Quality Sensor

For each sensor, use two 2-conductor 18 AWG (American Wire Gauge) twisted-pair cables (unshielded) to connect the separate isolated 24 vac power source to the sensor and to connect the sensor to the control board terminals.

To connect the sensor to the control, identify the positive (4 to 20 mA) and ground (SIG COM) terminals on the sensor. (See Fig. 53.) Connect the 4-20 mA terminal to RTU-MP J4-2 and connect the SIG COM terminal to RTU-MP J4-3. (See Fig. 67.)

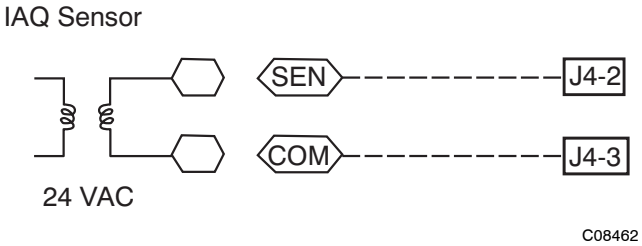

Fig. 67 - RTU-MP / Indoor CO_2 Sensor (33ZCSENCO2) Connections

Outdoor Air Quality Sensor (PNO 33ZCSENCO2 Plus Weatherproof Enclosure)

The outdoor air CO_2 sensor is designed to monitor carbon dioxide (CO_2) levels in the outside ventilation air and interface with the ventilation damper in an HVAC system. The OAQ sensor is packaged with an outdoor cover. (See Fig. 55.) The outdoor air CO_2 sensor must be located in the economizer outside air hood.

Wiring the Outdoor Air CO_2 Sensor

A dedicated power supply is required for this sensor. A two-wire cable is required to wire the dedicated power supply for the sensor. The two wires should be connected to the power supply and terminals 1 and 2.

To connect the sensor to the control, identify the positive (4 to 20 mA) and ground (SIG COM) terminals on the OAQ sensor. (See Fig. 53.) Connect the 4 to 20 mA terminal to RTU-MP J4-5. Connect the SIG COM terminal to RTU-MP J4-6. (See Fig. 68.)

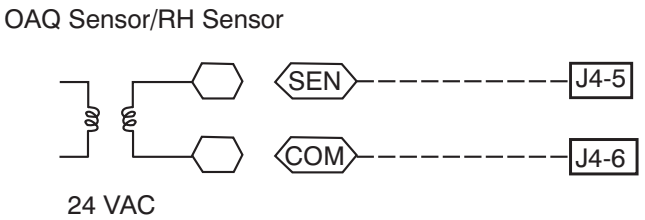

Fig. 68 - RTU-MP / Outdoor CO_2 Sensor (33ZCSENCO2) Connections

On 48TC units equipped with factory-installed Smoke Detector(s), the smoke detector controller implements the unit shutdown through its NC contact set connected to the unit's LCTB input. The FSD function is initiated via the smoke detector's Alarm NO contact set. The RTU-MP controller communicates the smoke detector's tripped status to the BAS building control. See Fig. 25 for unit smoke detector wiring.

The Fire Shutdown Switch configuration, ***MENU→Config→Inputs→input 5***, identifies the normally open status of this input when there is no fire alarm.

Alarm state is reset when the smoke detector alarm condition is cleared and reset at the smoke detector in the unit.

Connecting Discrete Inputs

Filter Status

The filter status accessory is a field-installed accessory. This accessory detects plugged filters. When installing this accessory, the unit must be configured for filter status by setting ***MENU→Config→Inputs→input 3, 5, 8, or 9*** to Filter Status and normally open (N/O) or normally closed (N/C). Input 8 or 9 is recommended for easy of installation. Refer to Fig. 62 and 63 for wire terminations at J5.

Fan Status

The fan status accessory is a field-installed accessory. This accessory detects when the indoor fan is blowing air. When installing this accessory, the unit must be configured for fan status by setting ***MENU→Config→Inputs→input 3, 5, 8, or 9*** to Fan Status and normally open (N/O) or normally closed (N/C). Input 8 or 9 is recommended for easy of installation. Refer to Fig. 62 and 63 for wire terminations at J5.

Remote Occupancy

The remote occupancy accessory is a field-installed accessory. This accessory overrides the unoccupied mode and puts the unit in occupied mode. When installing this accessory, the unit must be configured for remote occupancy by setting ***MENU→Config→Inputs→input 3, 5, 8, or 9*** to Remote Occupancy and normally open (N/O) or normally closed (N/C).

Also set ***MENU→Schedules→occupancy source*** to DI on/off. Input 8 or 9 is recommended for easy of installation. Refer to Fig. 62 and Table 21 for wire terminations at J5.

Power Exhaust (Output)

Connect the accessory Power Exhaust contactor coil(s) per Fig. 69.

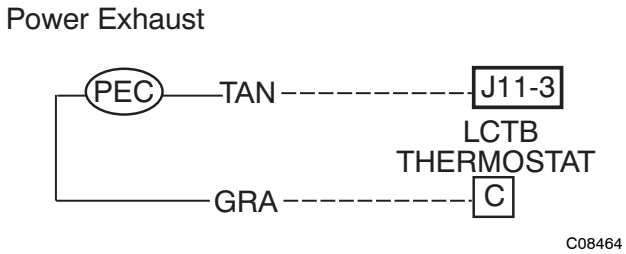

Fig. 69 - RTU-MP Power Exhaust Connections

Space Relative Humidity Sensor

The RH sensor is not used with 48TC models at this time.

Communication Wiring - Protocols

General

Protocols are the communication languages spoken by control devices. The main purpose of a protocol is to communicate information in the most efficient method possible. Different protocols exist to provide different kinds of information for different applications. In the BAS application, many different protocols are used, depending on manufacturer. Protocols do not change the function of a controller; just make the front end user different.

The RTU-MP can be set to communicate on four different protocols: BACnet, Modbus, N2, and LonWorks. Switch 3 (SW3) on the board is used to set protocol and baud rate. Switches 1 and 2 (SW1 and SW2) are used to set the board's network address. See Fig 70 for the switch setting per protocol. The 3rd party connection to the RTU-MP is through plug J19. Refer to the *RTU-MP 3rd Party Integration Guide* for more detailed information on protocols, 3rd party wiring, and networking.

NOTE: Power must be cycled after changing the SW1-3 switch settings.

SW3 Protocol Selection

PROTOCOL	DS8	DS7	DS6	DS5	DS4	DS3	DS2	DS1
BACnet MS/TP (Master)	Unused	OFF	OFF	OFF	ON	OFF	Select Baud	Select Baud
Modbus (Slave)	Unused	OFF	OFF	ON	ON	OFF	Select Baud	Select Baud
N2 (Slave)	Unused	OFF	OFF	OFF	ON	ON	OFF	OFF
LonWorks	Unused	ON	ON	OFF	ON	OFF	OFF	OFF

NOTE:
DS = Dip Switch
BACnet MS/TP SW3 example shown

Baud Rate Selections

BAUD RATE	DS2	DS1
9600	OFF	OFF
19,200	ON	OFF
38,400	OFF	ON
76,800	ON	ON

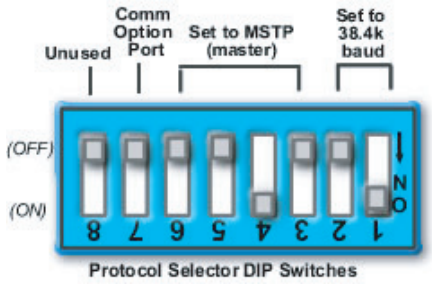

C07166

Fig. 70 - RTU-MP SW3 Dip Switch Settings

48TC

BACnet MS/TP

BACnet Master Slave/Token Passing (MS/TP) is used for communicating BACnet over a sub-network of BACnet-only controllers. This is the default Carrier communications protocol. Each RTU-MP module acts as an MS/TP Master. The speed of an MS/TP network can range from 9600 to 76.8K baud. Physical Addresses can be set from 01 to 99.

Modbus

The RTU-MP module can speak the Modicon Modbus RTU Protocol as described in the Modicon Modbus Protocol Reference Guide, PI-MBUS-300 Rev. J. The speed of a Modbus network can range from 9600 to 76.8K baud. Physical Addresses can be set from 01 to 99.

Johnson N2

N2 is not a standard protocol, but one that was created by Johnson Controls, Inc. that has been made open and available to the public. The speed of N2 network is limited to only 9600 baud. Physical Addresses can be set from 01 to 99.

LonWorks

LonWorks is an open protocol that requires the use of Echelon's Neuron microprocessor to encode and decode the LonWorks packets. In order to reduce the cost of adding that hardware on every module, a separate LonWorks Option Card (LON-OC) was designed to connect to the RTU-MP.

This accessory card is needed for LonWorks and has to be ordered and connected using the ribbon cable to plug J15. The RTU-MP's baud rate must be set to 38.4k to communicate with the LON-OC. The address switches (SW1 & SW2) are not used with LonWorks.

Local Access

BACview[6] Handheld

The BACview[6] is a keypad/display interface used to connect to the RTU-MP to access the control information, read sensor values, and test the RTU. (See Fig. 71.) This is an accessory interface that does not come with the MP controller and can only be used at the unit. Connect the BACview[6] to the RTU-MP's J12 local access port. There are 2 password protected levels in the display (User and Admin). The user password defaults to 0000 but can be changed. The Admin password is 1111 and cannot be changed. There is a 10 minute auto logout if a screen is left idle. See RTU-MP Controls, Start-Up, Operation, and Troubleshooting Instructions (Form 48-50H-T-2T), Appendix A for navigation and screen content.

Virtual BACview

Virtual BACview is a freeware computer program that functions as the BACview[6] Handheld. The USB Link interface (USB-L) is required to connect a computer to the RTU-MP board. The link cable connects a USB port to the J12 local access port. This program functions and operates identical to the handheld.

RTU-MP Troubleshooting

Communication LEDs

The LEDs indicate if the controller is speaking to the devices on the network. The LEDs should reflect communication traffic based on the baud rate set. The higher the baud rate the more solid the LEDs will appear.

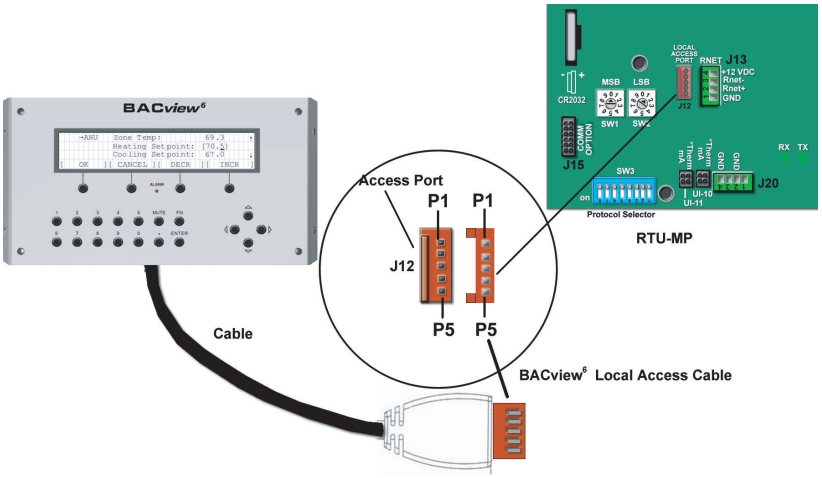

C07170

Fig. 71 - BACview[6] Handheld Connections

Table 22 – LEDs

The LEDs on the RTU-MP show the status of certain functions

If this LED is on...	Status is...
Power	The RTU MP has power
Rx	The RTU MP is receiving data from the network segment
Tx	The RTU MP is transmitting data over the network segment
DO#	The digital output is active

The **Run** and **Error** LEDs indicate control module and network status

If Run LED shows...	And Error LED shows...	Status is...
2 flashes per second	Off	Normal
2 flashes per second	2 flashes, alternating with **Run** LED	Five minute auto–restart delay after system error
2 flashes per second	3 flashes, then off	Control module has just been formatted
2 flashes per second	4 flashes, then pause	Two or more devices on this network have the same ARC156 network address
2 flashes per second	On	Exec halted after frequent system errors or control programs halted
5 flashes per second	On	Exec start–up aborted, Boot is running
5 flashes per second	Off	Firmware transfer in progress, Boot is running
7 flashes per second	7 flashes per second, alternating with **Run** LED	Ten second recovery period after brownout
14 flashes per second	14 flashes per second, alternating with **Run** LED	Brownout
On	On	Failure. Try the following solutions: • Turn the RTU–MP off, then on. • Format the RTU–MP. • Download memory to the RTU–MP. • Replace the RTU–MP.

Table 23 – Troubleshooting Alarms

POINT NAME	BACnet OBJECT NAME	ACTION TAKEN BY CONTROL	RESET METHOD	PROBABLE CAUSE
Safety Chain Alarm	safety_chain	Alarm Generated Immediate Shutdown	Automatic	Over load Indoor Fan or Electric Heater overheat.
Fire Shutdown Alarm	fire_alarm	Alarm Generated Immediate Shutdown	Automatic	Smoke detected by smoke detector or configuration incorrect
Space Temp Sensor Failure	spt_alarm	Alarm Generated Immediate Shutdown	Automatic	Faulty, shorted, or open thermistor caused by wiring error or loose connection.
SAT Sensor Alarm	sat_alarm	Alarm Generated Immediate Shutdown	Automatic	Faulty, shorted, or open thermistor caused by wiring error or loose connection.
High Space Temp Alarm	spt_hi	Alarm Generated	Automatic	The space temperature has risen above the cool setpoint by more than the desired amount.
Low Space Temp Alarm	spt_lo	Alarm Generated	Automatic	The space temperature has dropped below the heat setpoint by more than the desired amount.
High Supply Air Temp	sat_hi	Alarm Generated	Automatic	SAT is greater then 160 degrees for more than 5 minutes.
Low Supply Air Temp	sat_lo	Alarm Generated	Automatic	The supply air temperature is below 35°F for more than 5 minutes.
Supply Fan Failed to Start	sf_fail	Alarm Generated Immediately disable Operation	Automatic	Tripped Circuit Breaker, Broken belt, Bad indoor fan motor, Configuration incorrect, Bad fan status switch.
Supply Fan in Hand	sf_hand	Alarm Generated Ramp down Operations	Automatic	Bad Fan Status Switch, Configuration incorrect.
Compressor Safety Alarm	dx_compstat	Alarm Generated	Automatic	Compressor would not start.
Setpoint Slider Alarm	slide_alarm	Alarm Generated Offset set to zero	Automatic	STO sensor is open or shorted for more then 5 seconds.
Dirty Filter Alarm	filter	Alarm Generated	Automatic/reset timer when configured with or without switch	Dirty Filter, supply fan run time exceeded, filter switch configuration wrong.
Switch Configuration Alarm	sw_cfg_alarm	Alarm Generated Disable misconfigured switch functions	Configure correctly	More than one binary input is configured for the same purpose. More then one discrete input is configured to provide the same function.
Misconfigured Analog Input	an_cfg_alarm	Alarm Generated Disable 4 selectable analog inputs	Configure correctly	More then one analog input is configured to provide the same function.
OAT Sensor Alarm	oat_alarm	Alarm Generated Economizer and Low ambient DX cooling lockout disabled.	Automatic	Faulty, shorted, or open thermistor caused by wiring error or loose connection.
Space RH Sensor Alarm	sprh_alarm	Alarm Generated Dehumidification disabled	Automatic	Sensor reading is out of range. Bad sensor, bad wiring, or sensor configured incorrectly.
Outdoor RH Sensor Alarm	oarh_alarm	Alarm Generated	Automatic	Sensor reading is out of range. Bad sensor, bad wiring, or sensor configured incorrectly.
High Space Humidity	sprh_hi	Alarm Generated	Automatic	IRH is greater then 70% for more then 10 minutes.
Low Space Humidity	sprh_lo	Alarm Generated	Automatic	IRH is less then 35% for more then 10 minutes.
IAQ Sensor Alarm	iaq_alarm	Alarm Generated Disables IAQ Operation Economizer moves to minimum position	Automatic	Sensor reading is out of range. Bad sensor, bad wiring, or sensor configured incorrectly.
OAQ Sensor Alarm	oaq_alarm	Alarm Generated Set OAQ to 400	Automatic	Sensor reading is out of range. Bad sensor, bad wiring, or sensor configured incorrectly.
High Carbon Dioxide Level	co2_hi	Alarm Generated	Automatic	CO2 reading is above 1200ppm.
Supply Fan Runtime Alarm	sf_rntm	Alarm Generated	clear the timer	Supply fan run time exceeded user defined limit.
Compressor 1 Runtime Alarm	dx1_rntm	Alarm Generated	clear the timer	Compressor run time limit is exceeded.
Compressor 2 Runtime Alarm	dx2_rntm	Alarm Generated	clear the timer	Compressor run time limit is exceeded.

Alarms

Alarms can be checked through the network and/or the local access. All the alarms are listed in Table 23 with name, object name, action taken by control, reset method, and probable cause. There are help screens for each alarm on the local access display and listed in RTU-MP Controls, Start-Up, Operation, and Troubleshooting Instructions (Form 48-50H-T-2T), Appendix A: Help Screens. Some alarms are explained in detail below.

Safety Chain Alarm

This alarm occurs immediately if the supply-fan internal overload trips or if an electric-heat limit switch trips. The Unit Status will be Shutdown and the System Mode will be Disable. When this happens LCTB (R terminal) will not have 24 VAC, but the RTU-MP board will still be powered. All unit operations stop immediately and will not restart until the alarm automatically clears. There are no configurations for this alarm; it is all based on internal wiring. This alarm will never occur if Fire Shutdown Alarm is active.

Fire Shutdown Alarm

This alarm occurs immediately when the smoke detector senses smoke. The Unit Status will be Shutdown and the System Mode will be Disable. All unit operations stop immediately and will not restart until the alarm automatically clears. If there is not a smoke detector installed or the smoke detector did not trip, check input configurations.

Space Temp Sensor Failure

This alarm occurs if the space sensor wired to the RTU-MP is disconnected or shorted for more then 10 seconds. When this occurs the Unit Status will be Shutdown and the System Mode will be Run. Sensor, sensor connections, wiring, board connection, and configurations should be checked for faults or errors. Alarm will reset automatically when cause is fixed.

SAT Sensor Alarm

This alarm occurs immediately when the supply air temperature sensor wired to the RTU-MP is disconnected or shorted. When this occurs the Unit Status will be Shutdown and the System Mode will be Run. Sensor, sensor connections, wiring, board connection, and configurations should be checked for faults or errors. Alarm will reset automatically when cause is fixed.

Switch Configuration Alarm

This occurs if more than one binary input (inputs 3, 5, 8, and 9) is configured for the same function. When this happens the two inputs (or more) configured wrong will be disabled as an inputs. This alarm will automatically be cleared when configuration is corrected.

An example of this would be: Input 3 = Compressor Safety, input 5 = Fan Status, input 8 = Fan Status, and input 9 = Humidistat; the alarm would be active, unit would run, compressor safety and humidistat would function normally, and Fan Status (inputs 5 & 8) will be interpreted as “No Function.”

Misconfigured Analog Input

This occurs if more than one analog input (inputs 1 & 2) is configured for the same sensor. When this happens the two inputs will be disabled as inputs. This alarm will automatically be cleared when configuration is corrected.

An example of this would be: Input 1 = IAQ Sensor, input 2 = IAQ Sensor; the alarm would be active, unit would run, but the IAQ Sensor (inputs 1 & 2) will be interpreted as “No Function.”

Third Party Networking

Third party communication and networking troubleshooting should be done by or with assistance from the front end 3rd party technician. A Module Status Report (Modstat) can be run from the BACview[6], see Table 24 to perform. This lists information about the board status and networking state. For basic troubleshooting, see Table 25. Refer to the *RTU-MP 3rd Party Integration Guide* for additional information.

BACnet MS/TP

1. Verify that the BAS and controller are both set to speak the BACnet MS/TP protocol. The protocol of the controller is set via SW3 (switches 3, 4, 5, and 6). The protocol can also be verified by getting a Modstat of the controller through the BACview. Hit the “FN” key and the ’.’ key at the same time to pull up a Modstat. Scroll to the bottom of the page and there is a section entitled “Network Communications.” The active protocol and baud rate will be shown in this section.
2. Verify that the BAS and controller are set for the same baud rate. The baud rate of the controller is set via SW3 (switches 1 and 2). The baud rate can also be verified via the BACview by obtaining a Modstat. (See Fig. 72.)
3. Verify that the BAS is configured to speak 2-wire EIA-485 to the controller. The BAS may have to configure jumper or DIP switches on their end.
4. Verify that the BAS and the controller have the same communication settings (8 data bits, No Parity, and 1 stop bit).
5. Verify that the controller has a unique MAC address on the MS/TP bus. The controller’s MS/TP MAC address is set by its rotary address switches.
6. Verify proper wiring between the BAS and the controller.
7. Verify that the BAS is reading or writing to the proper BACnet objects in the controller. Download the latest points list for the controller to verify.
8. Verify that the BAS is sending his requests to the proper MS/TP MAC address of our controller.
9. Present the BAS company with a copy of our controller’s BACnet PICS so that they know which BACnet commands are supported. See below.

```
Device Instance: 0160001

1 PRGs loaded.  1 PRGs running.

Module status:
Firmware sections validated in flash memory
============================================
  Boot16-H         - v2.06:001   Jun 19 2007
  RTU-MP DRIVER    - v2.09:050   Jun 26 2007

Reset counters:
    11 Power failures
     0 Brownouts
    18 Commanded warm boots
    22 Commanded cold boots
     0 System errors
     0 Watchdog timeouts

System error message history:                                  Type   Specific
Warning message history:
Information message history:
  POWERUP: BACnet reinitialize warmstart    06/29/07 10:49:40
  Menu file not found.                      06/29/07 10:48:35

ARC156 reconfigurations during the last hour (cleared upon reset):
   Total ....................... 0
   Initiated by this node ...... 0

Core board hardware:
  Type=147, board=34, manufactured on 05/14/2007, S/N 21A740188N
  RAM: 1024 kBytes;    FLASH: 1024 kBytes, type = 3
Base board hardware:
  Type=147, board=71, manufactured on 05/14/2007, S/N RMP750037N

Largest free heap space = 65536.

Database size = 742082 , used = 352162, free = 389920.

Raw physical switches: 0x01280000

Module Communications:
  Network Protocol=BACnet MSTP Master
  Network Baud Rate=9600 bps
```

C07195

Fig. 72 - Module Status Report (Modstat) Example

10. In certain situations, it may be necessary to tweak the MS/TP Protocol timing settings through the BACview[6]. There are two settings that may be tweaked:

- **Max Masters**: Defines the highest MS/TP Master MAC address on this MS/TP network. For example, if there are 3 master nodes on an MS/TP network, and their MAC addresses are 1, 8, and 16, then Max Masters would be set to 16 (since this is the highest MS/TP MAC address on the network). This property optimizes MS/TP network communications by preventing token passes and "poll for master" requests to non-existent Master nodes (i.e., in the above example, MAC address 16 would know to pass the token back to MAC address 1 instead of counting up to MAC address 127).
  Each MS/TP master node on the network must have their Max Masters set to this same value. The default is 127.
- **MaxInfo Frames**: This property defines the maximum number of responses that will be sent when our controller gets the token. A valid number is any positive integer. The default is 10 and should be ideal for the majority of applications. In cases where the controller is the target of many requests, this number could be increased as high as 100 or 200.

NOTE: MS/TP networks can be comprised of both Master and Slave nodes. Valid MAC addresses for Master nodes are 0 - 127 and valid addresses for Slave nodes are 0 - 254.

NOTE: See RTU-MP 3rd Party Integration Guide (or alternatively RTU-MP Controls, Start-Up, Operation, and Troubleshooting Instructions (Form 48-50H-T-2T) Appendix) for Protocol Maps.

Table 24 – Manufacture Date

When troubleshooting, you may need to know a control module's manufacture date

Obtain the manufacture date from a...	Notes
Module status report (modstat)	To obtain a modstat with BACview[6]: 1. Press Function (FN) key and hold. 2. Then press period (.) 3. Release both buttons. The report shows the date under **Main board hardware**.
Sticker on the back of the main control module board "Serial No: RMPYMxxxxN" (Bar Coded & Typed Number)	The serial numbers are unique and contain embedded information: **"RMP"** – These first three digits are unique to RTU–MP and are used as an identifier. **"YM"** – These two digits identify the last digit of the year and month (in hex, A=10/Oct) of manufacture. "74" would represent a date of manufacture of "April 2007". **"xxxx"** – These four digits represent the sequential number of units produced for a given product for the mentioned manufacturing time period. **"N"** – This final digit represents the decade and toggles between "N" and "M" every ten years.

Table 25 – Basic Protocol Troubleshooting

Problem	Possible cause	Corrective action
No communication with 3rd party vendor	Incorrect settings on SW1, SW2 and SW3	Verify and correct switch settings. Cycle power to RTU–MP after changing switch settings.
	RS485 Port has no voltage output	Verify RTU–MP has correct power supply
	(check with RTU–MP disconnected from RS485 communication bus)	Possible bad driver on board.
	Bacnet @ 9600/19.2K – .01 to .045vdc	Check RS485 bus for external before reconnecting to the bus
	Bacnet @ 38.4K – .06 to .09vdc	Voltage, shorts or grounding
	Bacnet @ 76.8K – .1vdc	before reconnecting to the bus
	Modbus @ 9600 – 76.8K – .124vdc	
	N2 @ 9600 – .124vdc	
	Verify devices are daisy chained and repeaters and bias terminators are correctly installed	Check 3rd party vendor RS485 communication wiring guidelines and troubleshooting procedures

Table 26 – Modbus Exception Codes that May be Returned From This Controller

CODE	NAME	MEANING
01	Illegal Function	The Modbus function code used in the query is not supported by the controller.
02	Illegal Data Address	The register address used in the query is not supported by the controller.
04	Slave Device Failure	The Modbus Master has attempted to write to a non–existent register or a read–only register in the controller.

Modbus

1. Verify that the BAS and controller are both set to speak the Modbus RTU protocol. The protocol of the controller is set via SW3 (switches 3, 4, 5, and 6). The protocol can also be verified by getting a Modstat of the controller through the BACview. Hit the "FN" key and the '.' key at the same time to pull up a Modstat. Scroll to the bottom of the page and there is a section entitled "Network Communications." The active protocol and baud rate will be shown in this section.
2. Verify that the BAS and controller are set for the same baud rate. The baud rate of the controller is set via SW3 (switches 1 and 2). The baud rate can also be verified via the BACview by obtaining a Modstat. (See Fig. 72)
3. Verify that the BAS is configured to speak 2-wire EIA-485 to the controller. The BAS may have to configure jumper or DIP switches on their end.
4. Verify that the BAS and the controller have the same communication settings (8 data bits, No Parity, and 1 stop bit).
5. Verify that the controller has a unique Modbus slave address. The controller's Modbus slave address is set by its rotary address switches.
6. Verify that the BAS is using the proper Modbus function codes to access data from our controller. Supported function codes are shown above.
7. Verify proper wiring between the BAS and the controller.
8. Verify that the BAS is reading or writing to the proper Modbus register numbers on the controller. Download the latest points list for the controller to verify.
9. Verify that the BAS is sending his requests to the proper slave address of our controller.

NOTE: See RTU-MP 3rd Party Integration Guide (or alternatively RTU-MP 3rd Party Integration Guide (or alternatively RTU-MP Controls, Start-Up, Operation, and Troubleshooting Instructions (Form 48-50H-T-2T), Appendix) for Modbus Protocol Conformance Statement.

N2

1. Verify that the BAS and controller are both set to speak the N2 protocol. The protocol of the controller is set via SW3 (switches 3, 4, 5, and 6). The protocol can also be verified by getting a Modstat of the controller through the BACview. Hit the "FN" key and the '.' key at the same time to pull up a Modstat. Scroll to the bottom of the page and there is a section entitled "Network Communications." The active protocol and baud rate will be shown in this section.
2. Verify that the BAS and controller are set for 9600 baud. The baud rate of the controller is set via SW3 (switches 1 and 2). The baud rate can also be verified via the BACview by obtaining a Modstat. (See Fig. 72.)
3. Verify that the BAS is configured to speak 2-wire EIA-485 to the controller. The BAS may have to configure jumper or DIP switches on their end.
4. Verify that the BAS and the controller have the same communication settings (8 data bits, No Parity, and 1 stop bit).
5. Verify that the controller has a unique N2 slave address on the N2 bus. The controller's N2 slave address is set by its rotary address switches.
6. Verify proper wiring between the BAS and the controller.
7. Verify that the BAS is reading or writing to the proper network point addresses on the controller. Download the latest points list for the controller to verify.
8. Verify that the BAS is sending his requests to the proper slave address of our controller.

NOTE: See RTU-MP 3rd Party Integration Guide (or alternatively RTU-MP 3rd Party Integration Guide (or alternatively RTU-MP Controls, Start-Up, Operation, and Troubleshooting Instructions (Form 48-50H-T-2T) Appendix) for N2 Protocol Conformance Statement.

ECONOMI$ER SYSTEMS

The 48TC units may be equipped with a factory-installed or accessory (field-installed) economizer system. Two types are available: with a logic control system (EconoMi$er IV) and without a control system (EconoMi$er2, for use with external control systems such as PremierLink). See Fig. 73 for component locations on each type. See Fig. 74 and Fig. 75 for economizer section wiring diagrams.

Both EconoMi$ers use direct-drive damper actuators.

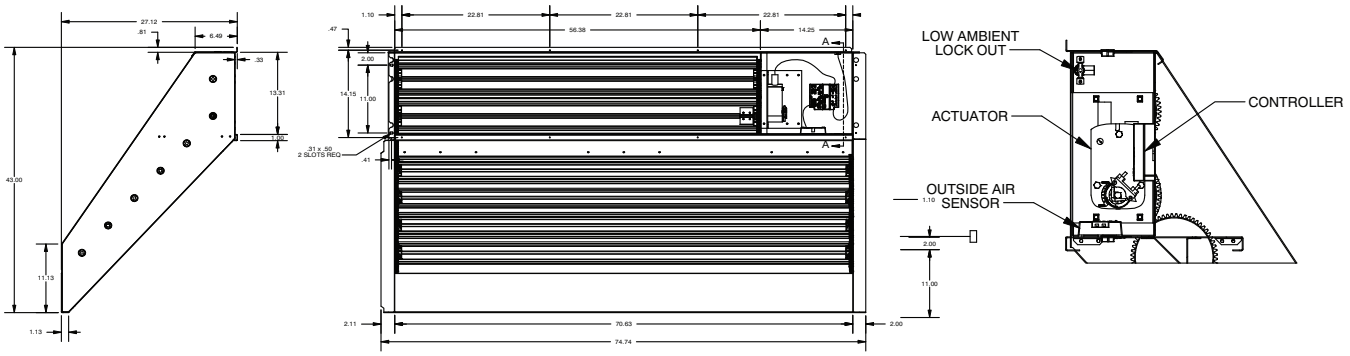

Fig. 73 - EconoMi$er IV Component Location

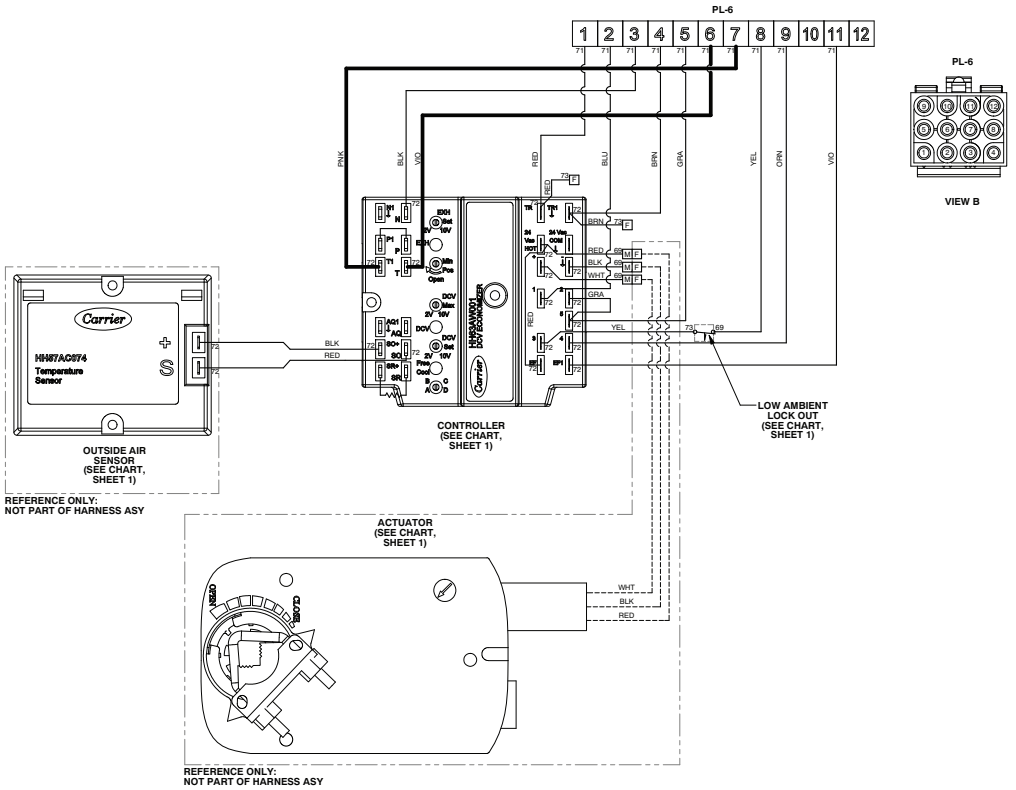

C10342

Fig. 74 - EconoMi$er IV Wiring

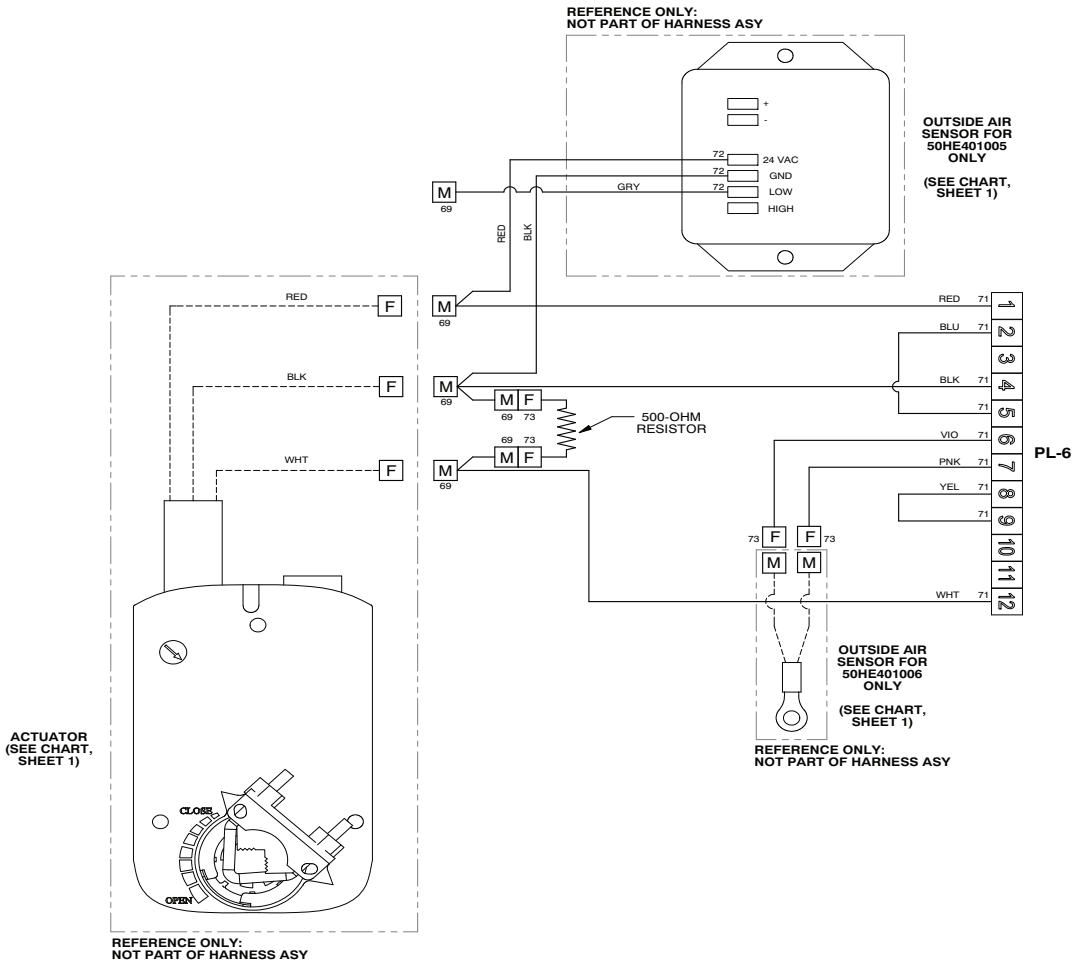

C10343

Fig. 75 - EconoMi$er2 with 4 to 20 mA Control Wiring

48TC

Table 27 – EconoMi$er IV Input/Output Logic

INPUTS					OUTPUTS			
Demand Control Ventilation (DCV)	Enthalpy*		Y1	Y2	Compressor		N Terminal†	
	Outdoor	Return			Stage 1	Stage 2	Occupied	Unoccupied
							Damper	
Below set (DCV LED Off)	High (Free Cooling LED Off)	Low	On	On	On	On	Minimum position	Closed
			On	Off	On	Off		
			Off	Off	Off	Off		
	Low (Free Cooling LED On)	High	On	On	On	Off	Modulating** (between min. position and full-open)	Modulating** (between closed and full-open)
			On	Off	Off	Off		
			Off	Off	Off	Off	Minimum position	Closed
Above set (DCV LED On)	High (Free Cooling LED Off)	Low	On	On	On	On	Modulating†† (between min. position and DCV maximum)	Modulating†† (between closed and DCV maximum)
			On	Off	On	Off		
			Off	Off	Off	Off		
	Low (Free Cooling LED On)	High	On	On	On	Off	Modulating***	Modulating†††
			On	Off	Off	Off		
			Off	Off	Off	Off		

* For single enthalpy control, the module compares outdoor enthalpy to the ABCD setpoint.
† Power at N terminal determines Occupied/Unoccupied setting: 24 vac (Occupied), no power (Unoccupied).
** Modulation is based on the supply-air sensor signal.
†† Modulation is based on the DCV signal.
*** Modulation is based on the greater of DCV and supply-air sensor signals, between minimum position and either maximum position (DCV) or fully open (supply-air signal).
††† Modulation is based on the greater of DCV and supply-air sensor signals, between closed and either maximum position (DCV) or fully open (supply-air signal).

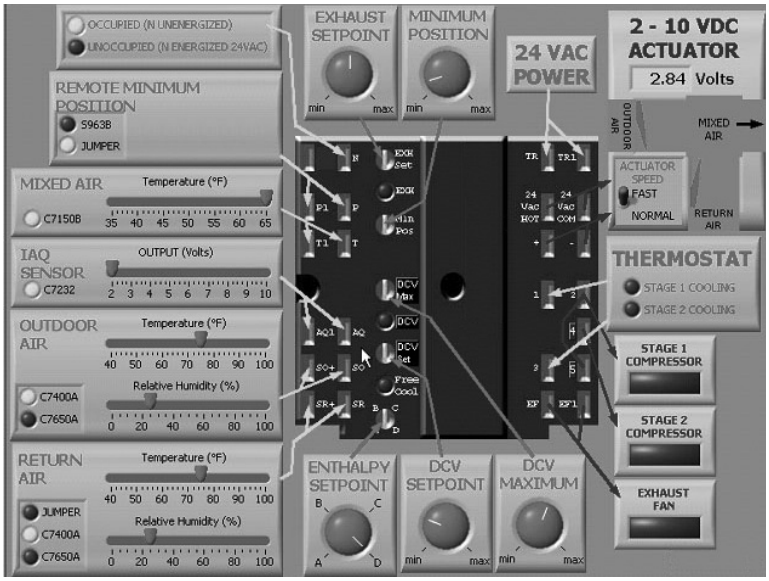

C06053

Fig. 76 - EconoMi$er IV Functional View

EconoMi$er IV

Table 27 provides a summary of EconoMi$er IV. Troubleshooting instructions are enclosed.

A functional view of the EconoMi$er is shown in Fig. 76. Typical settings, sensor ranges, and jumper positions are also shown. An EconoMi$er IV simulator program is available from Carrier to help with EconoMi$er IV training and troubleshooting.

EconoMi$er IV Standard Sensors

Outdoor Air Temperature (OAT) Sensor

The outdoor air temperature sensor (HH57AC074) is a 10 to 20 mA device used to measure the outdoor-air temperature. The outdoor-air temperature is used to determine when the EconoMi$er IV can be used for free cooling. The sensor is factory-installed on the EconoMi$er IV in the outdoor airstream. The operating range of temperature measurement is 40° to 100°F (4° to 38°C). (See Fig. 79.)

Supply Air Temperature (SAT) Sensor

The supply air temperature sensor is a 3 K thermistor located at the inlet of the indoor fan. (See Fig. 77.) This sensor is factory installed. The operating range of temperature measurement is 0° to 158°F (-18° to 70°C). See Table 15 for sensor temperature/resistance values.

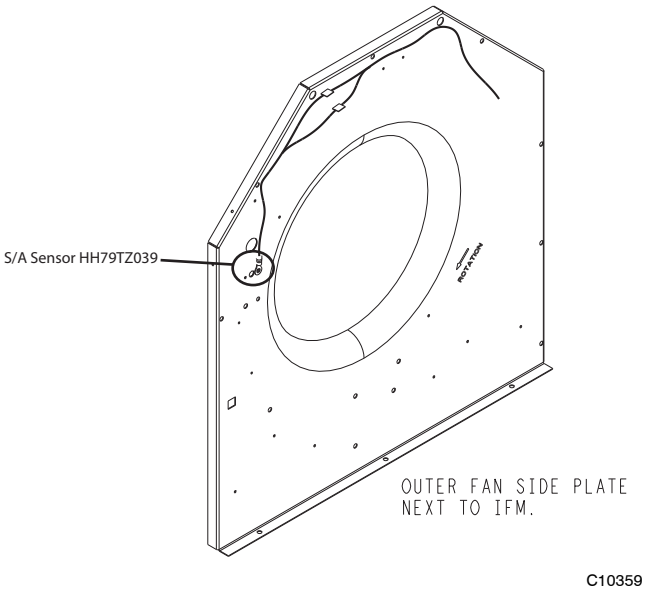

Fig. 77 - Supply Air Sensor Location

The temperature sensor looks like an eyelet terminal with wires running to it. The sensor is located in the "crimp end" and is sealed from moisture.

Outdoor Air Lockout Sensor

The EconoMi$er IV is equipped with an ambient temperature lockout switch located in the outdoor airstream which is used to lock out the compressors below a 42°F (6°C) ambient temperature.

EconoMi$er IV Control Modes

IMPORTANT: The optional EconoMi$er2 does not include a controller. The EconoMi$er2 is operated by a 4 to 20 mA signal from an existing field-supplied controller (such as PremierLink™ control). See Fig. 75 for wiring information.

Determine the EconoMi$er IV control mode before set up of the control. Some modes of operation may require different sensors. (See Table 27.) The EconoMi$er IV is supplied from the factory with a supply-air temperature sensor and an outdoor-air temperature sensor. This allows for operation of the EconoMi$er IV with outdoor air dry bulb changeover control. Additional accessories can be added to allow for different types of changeover control and operation of the EconoMi$er IV and unit.

Outdoor Dry Bulb Changeover

The standard controller is shipped from the factory configured for outdoor dry bulb changeover control. The outdoor air and supply air temperature sensors are included as standard. For this control mode, the outdoor temperature is compared to an adjustable setpoint selected on the control. If the outdoor-air temperature is above the setpoint, the EconoMi$er IV will adjust the outside air dampers to minimum position. If the outdoor-air temperature is below the setpoint, the position of the outside air dampers will be controlled to provided free cooling using outdoor air. When in this mode, the LED next to the free cooling setpoint potentiometer will be on. The changeover temperature setpoint is controlled by the free cooling setpoint potentiometer located on the control. (See Fig. 78.)

The scale on the potentiometer is A, B, C, and D. See Fig. 79 for the corresponding temperature changeover values.

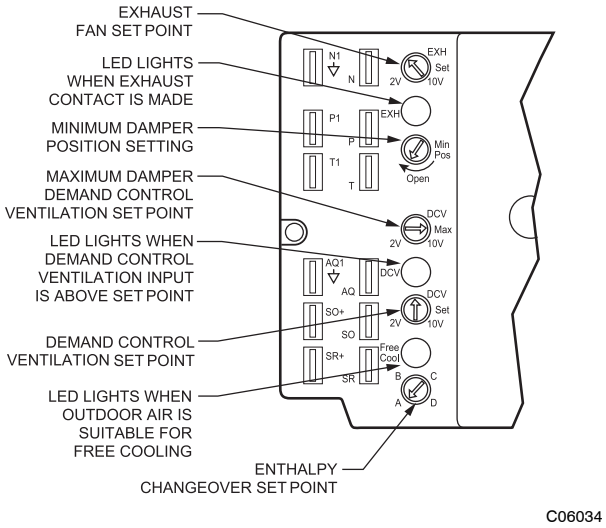

Fig. 78 - EconoMi$er IV Controller Potentiometer and LED Locations

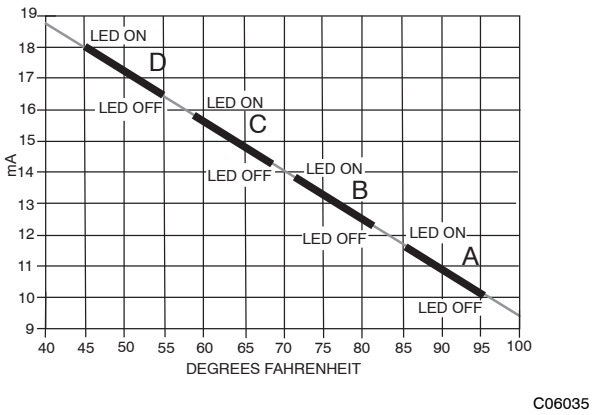

Fig. 79 - Outside Air Temperature Changeover Setpoints

48TC

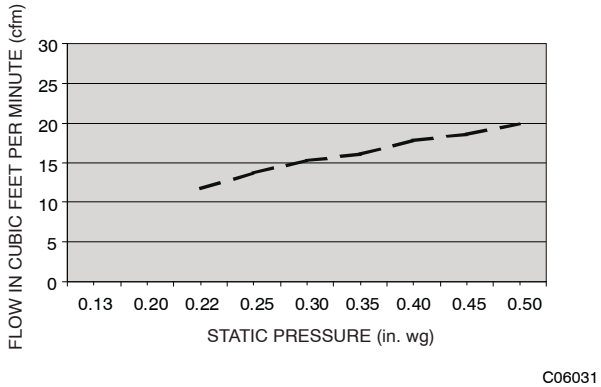

Fig. 80 - Outdoor-Air Damper Leakage

Differential Dry Bulb Control

For differential dry bulb control the standard outdoor dry bulb sensor is used in conjunction with an additional accessory dry bulb sensor (part number CRTEMPSN002A00). The accessory sensor must be mounted in the return airstream. (See Fig. 81.) Wiring is provided in the EconoMi$er IV wiring harness. (See Fig. 74.)

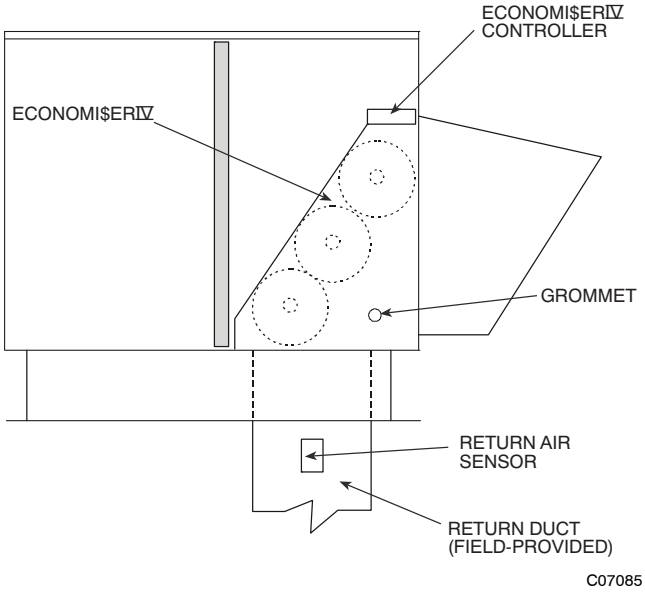

Fig. 81 - Return Air Temperature or Enthalpy Sensor Mounting Location

In this mode of operation, the outdoor-air temperature is compared to the return-air temperature and the lower temperature airstream is used for cooling. When using this mode of changeover control, turn the enthalpy setpoint potentiometer fully clockwise to the D setting. (See Fig. 78.)

Outdoor Enthalpy Changeover

For enthalpy control, accessory enthalpy sensor (part number HH57AC078) is required. Replace the standard outdoor dry bulb temperature sensor with the accessory enthalpy sensor in the same mounting location. (See Fig. 81.) When the outdoor air enthalpy rises above the outdoor enthalpy changeover setpoint, the outdoor-air damper moves to its minimum position. The outdoor enthalpy changeover setpoint is set with the outdoor enthalpy setpoint potentiometer on the EconoMi$er IV controller. The setpoints are A, B, C, and D. (See Fig. 82.) The factory-installed 620-ohm jumper must be in place across terminals S_R and SR+ on the EconoMi$er IV controller.

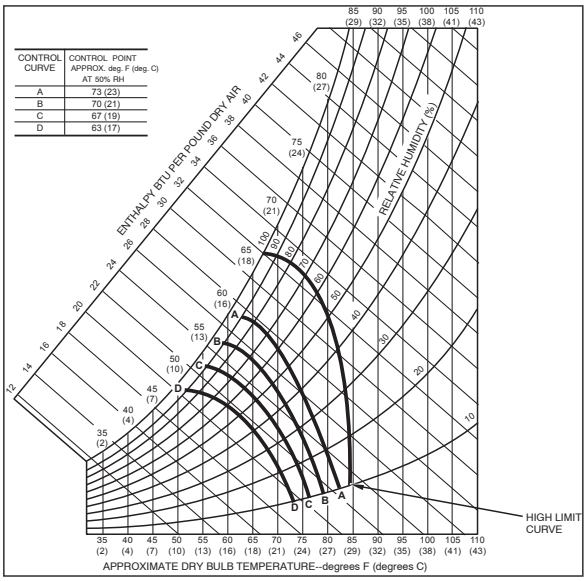

Fig. 82 - Enthalpy Changeover Setpoints

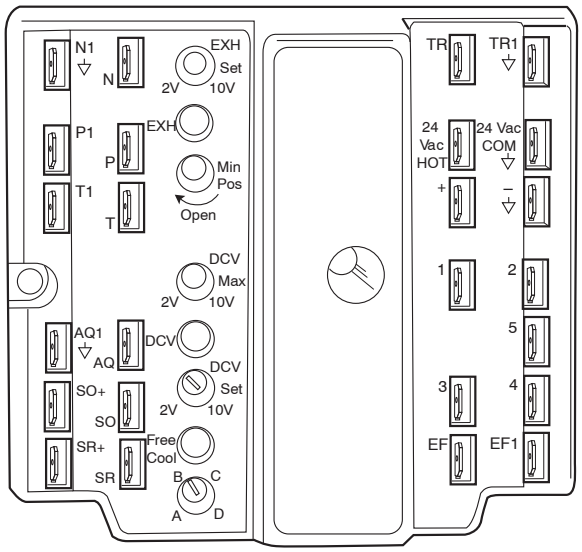

Fig. 83 - EconoMi$er IV Control

Differential Enthalpy Control

For differential enthalpy control, the EconoMi$er IV controller uses two enthalpy sensors (HH57AC078 and CRENTDIF004A00), one in the outside air and one in the return air duct. The EconoMi$er IV controller compares the outdoor air enthalpy to the return air enthalpy to determine EconoMi$er IV use. The controller selects the lower enthalpy air (return or outdoor) for cooling. For example, when the outdoor air has a lower enthalpy than the return air, the EconoMi$er IV opens to bring in outdoor air for free cooling.

Replace the standard outside air dry bulb temperature sensor with the accessory enthalpy sensor in the same mounting location. (See Fig. 81.) Mount the return air enthalpy sensor in the return air duct. (See Fig. 81.) Wiring is provided in the EconoMi$er IV wiring harness. (See Fig. 74.) The outdoor enthalpy changeover setpoint is set with the outdoor enthalpy setpoint potentiometer on the EconoMi$er IV controller. When using this mode of changeover control, turn the enthalpy setpoint potentiometer fully clockwise to the D setting.

Indoor Air Quality (IAQ) Sensor Input

The IAQ input can be used for demand control ventilation control based on the level of CO_2 measured in the space or return air duct.

There is both a factory-installed (FIOP) CO_2 option (sensor 8001B with no display, which is mounted on the side of the EconoMi$er) and a field-installed CO_2 option (sensor 8002 with display, which is mounted on the return air duct). While performing the same function, they differ in their ability to be configured. The FIOP version is preset and requires no changes in most applications. If a configuration change is required, service kit #UIP2072 (software CD, cables, and instructions) and a laptop PC are required. The field-installed version with display can be configured stand-alone. (See section "CO_2 Sensor Configuration".)

Mount the accessory IAQ sensor according to manufacturer specifications. The IAQ sensor should be wired to the AQ and AQ1 terminals of the controller. Adjust the DCV potentiometers to correspond to the DCV voltage output of the indoor air quality sensor at the user-determined setpoint. (See Fig. 84.)

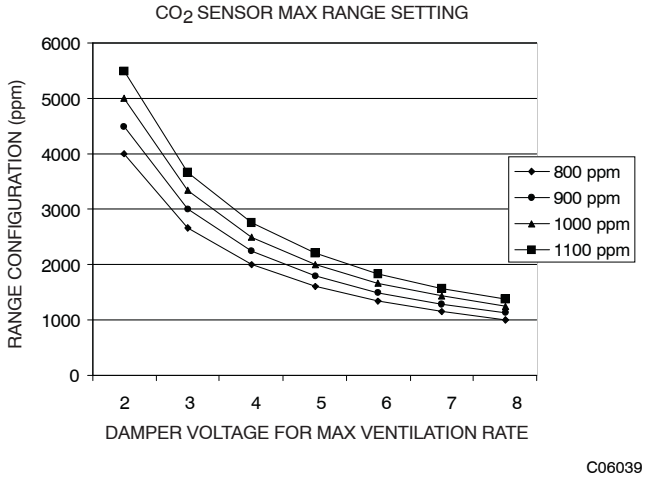

Fig. 84 - CO_2 Sensor Maximum Range Settings

If a separate field-supplied transformer is used to power the IAQ sensor, the sensor must not be grounded or the EconoMi$er IV control board will be damaged.

When using demand ventilation, the minimum damper position represents the minimum ventilation position for VOC (volatile organic compounds) ventilation requirements. The maximum demand ventilation position is used for fully occupied ventilation.

When demand ventilation control is not being used, the minimum position potentiometer should be used to set the occupied ventilation position. The maximum demand ventilation position should be turned fully clockwise.

Exhaust Setpoint Adjustment

The exhaust setpoint will determine when the exhaust fan runs based on damper position (if accessory power exhaust is installed). The setpoint is modified with the Exhaust Fan Setpoint (EXH SET) potentiometer. (See Fig. 78.) The setpoint represents the damper position above which the exhaust fans will be turned on. When there is a call for exhaust, the EconoMi$er IV controller provides a 45 ± 15 second delay before exhaust fan activation to allow the dampers to open. This delay allows the damper to reach the appropriate position to avoid unnecessary fan overload.

Minimum Position Control

There is a minimum damper position potentiometer on the EconoMi$er IV controller. (See Fig. 78.) The minimum damper position maintains the minimum airflow into the building during the occupied period.

When using demand ventilation, the minimum damper position represents the minimum ventilation position for VOC (volatile organic compound) ventilation requirements. The maximum demand ventilation position is used for fully occupied ventilation.

When demand ventilation control is not being used, the minimum position potentiometer should be used to set the occupied ventilation position. The maximum demand ventilation position should be turned fully clockwise.

Adjust the minimum position potentiometer to allow the minimum amount of outdoor air, as required by local codes, to enter the building. Make minimum position adjustments with at least 10°F temperature difference between the outdoor and return-air temperatures.

To determine the minimum position setting, perform the following procedure:

1. Calculate the appropriate mixed air temperature using the following formula:

$$(T_O \times \frac{OA}{100}) + (TR \times \frac{RA}{100}) = T_M$$

T_O = Outdoor-Air Temperature

OA = Percent of Outdoor Air

T_R = Return-Air Temperature

RA = Percent of Return Air

T_M = Mixed-Air Temperature

As an example, if local codes require 10% outdoor air during occupied conditions, outdoor-air temperature is 60°F, and return-air temperature is 75°F.

(60 x .10) + (75 x .90) = 73.5°F

2. Disconnect the supply air sensor from terminals T and T1.

3. Ensure that the factory-installed jumper is in place across terminals P and P1. If remote damper positioning is being used, make sure that the terminals are wired according to Fig. 74 and that the minimum position potentiometer is turned fully clockwise.
4. Connect 24 vac across terminals TR and TR1.
5. Carefully adjust the minimum position potentiometer until the measured mixed air temperature matches the calculated value.
6. Reconnect the supply air sensor to terminals T and T1.

Remote control of the EconoMi$er IV damper is desirable when requiring additional temporary ventilation. If a field-supplied remote potentiometer (Honeywell part number S963B1128) is wired to the EconoMi$er IV controller, the minimum position of the damper can be controlled from a remote location.

To control the minimum damper position remotely, remove the factory-installed jumper on the P and P1 terminals on the EconoMi$er IV controller. Wire the field-supplied potentiometer to the P and P1 terminals on the EconoMi$er IV controller. (See Fig. 74.)

Damper Movement

Damper movement from full open to full closed (or vice versa) takes 2-$^1/_2$ minutes.

Thermostats

The EconoMi$er IV control works with conventional thermostats that have a Y1 (cool stage 1), Y2 (cool stage 2), W1 (heat stage 1), W2 (heat stage 2), and G (fan). The EconoMi$er IV control does not support space temperature sensors. Connections are made at the thermostat terminal connection board located in the main control box.

Demand Control Ventilation (DCV)

When using the EconoMi$er IV for demand controlled ventilation, there are some equipment selection criteria which should be considered. When selecting the heat capacity and cool capacity of the equipment, the maximum ventilation rate must be evaluated for design conditions. The maximum damper position must be calculated to provide the desired fresh air.

Typically the maximum ventilation rate will be about 5 to 10% more than the typical cfm required per person, using normal outside air design criteria.

A proportional anticipatory strategy should be taken with the following conditions: a zone with a large area, varied occupancy, and equipment that cannot exceed the required ventilation rate at design conditions. Exceeding the required ventilation rate means the equipment can condition air at a maximum ventilation rate that is greater than the required ventilation rate for maximum occupancy. A proportional-anticipatory strategy will cause the fresh air supplied to increase as the room CO_2 level increases even though the CO_2 setpoint has not been reached. By the time the CO_2 level reaches the setpoint, the damper will be at maximum ventilation and should maintain the setpoint.

In order to have the CO_2 sensor control the economizer damper in this manner, first determine the damper voltage output for minimum or base ventilation. Base ventilation is the ventilation required to remove contaminants during unoccupied periods. The following equation may be used to determine the percent of outside air entering the building for a given damper position. For best results there should be at least a 10 degree difference in outside and return-air temperatures.

$$\left(T_O \times \frac{OA}{100}\right) + \left(TR \times \frac{RA}{100}\right) = T_M$$

T_O = Outdoor-Air Temperature

OA = Percent of Outdoor Air

T_R = Return-Air Temperature

RA = Percent of Return Air

T_M = Mixed-Air Temperature

Once base ventilation has been determined, set the minimum damper position potentiometer to the correct position.

The same equation can be used to determine the occupied or maximum ventilation rate to the building. For example, an output of 3.6 volts to the actuator provides a base ventilation rate of 5% and an output of 6.7 volts provides the maximum ventilation rate of 20% (or base plus 15 cfm per person). Use Fig. 84 to determine the maximum setting of the CO_2 sensor. For example, an 1100 ppm setpoint relates to a 15 cfm per person design. Use the 1100 ppm curve on Fig. 84 to find the point when the CO_2 sensor output will be 6.7 volts. Line up the point on the graph with the left side of the chart to determine that the range configuration for the CO_2 sensor should be 1800 ppm. The EconoMi$er IV controller will output the 6.7 volts from the CO_2 sensor to the actuator when the CO_2 concentration in the space is at 1100 ppm. The DCV setpoint may be left at 2 volts since the CO_2 sensor voltage will be ignored by the EconoMi$er IV controller until it rises above the 3.6 volt setting of the minimum position potentiometer.

Once the fully occupied damper position has been determined, set the maximum damper demand control ventilation potentiometer to this position. Do not set to the maximum position as this can result in over-ventilation to the space and potential high humidity levels.

CO_2 Sensor Configuration

The CO_2 sensor has preset standard voltage settings that can be selected anytime after the sensor is powered up. (See Table 28.)

Use setting 1 or 2 for Carrier equipment. (See Table 28.)

1. Press Clear and Mode buttons. Hold at least 5 seconds until the sensor enters the Edit mode.
2. Press Mode twice. The STDSET Menu will appear.

Table 28 – CO_2 Sensor Standard Settings

SETTING	EQUIPMENT	OUTPUT	VENTILATION RATE (CFM/Person)	ANALOG OUTPUT	CO_2 CONTROL RANGE (ppm)	OPTIONAL RELAY SETPOINT (ppm)	RELAY HYSTERESIS (ppm)
1	Interface w/Standard Building Control System	Proportional	Any	0–10V 4–20mA	0–2000	1000	50
2		Proportional	Any	2–10V 7–20mA	0–2000	1000	50
3		Exponential	Any	0–10V 4–20mA	0–2000	1100	50
4	Economizer	Proportional	15	0–10V 4–20mA	0–1100	1100	50
5		Proportional	20	0–10V 4–20mA	0–900	900	50
6		Exponential	15	0–10V 4–20mA	0–1100	1100	50
7		Exponential	20	0–10V 4–20mA	0–900	900	50
8	Health & Safety	Proportional	—	0–10V 4–20mA	0–9999	5000	500
9	Parking/Air Intakes/ Loading Docks	Proportional	—	0–10V 4–20mA	0–2000	700	50

Table 29 – EconoMi$er IV Sensor Usage

APPLICATION	ECONOMI$ER IV WITH OUTDOOR AIR DRY BULB SENSOR Accessories Required		
Outdoor Air Dry Bulb	None. The outdoor air dry bulb sensor is factory installed.		
Differential Dry Bulb	CRTEMPSN002A00*		
Single Enthalpy	HH57AC078		
Differential Enthalpy	HH57AC078 and CRENTDIF004A00*		
CO_2 for DCV Control using a Wall-Mounted CO_2 Sensor	33ZCSENCO2		
CO_2 for DCV Control using a Duct-Mounted CO_2 Sensor	33ZCSENCO2† and 33ZCASPCO2**	OR	CRCBDIOX005A00††

* CRENTDIF004A00 and CRTEMPSN002A00 accessories are used on many different base units. As such, these kits may contain parts that will not be needed for installation.

† 33ZCSENCO2 is an accessory CO_2 sensor.

** 33ZCASPCO2 is an accessory aspirator box required for duct-mounted applications.

†† CRCBDIOX005A00 is an accessory that contains both 33ZCSENCO2 and 33ZCASPCO2 accessories.

3. Use the Up/Down button to select the preset number. (See Table 28.)
4. Press Enter to lock in the selection.
5. Press Mode to exit and resume normal operation.

The custom settings of the CO_2 sensor can be changed anytime after the sensor is energized. Follow the steps below to change the non-standard settings:

1. Press Clear and Mode buttons. Hold at least 5 seconds until the sensor enters the Edit mode.
2. Press Mode twice. The STDSET Menu will appear.
3. Use the Up/Down button to toggle to the NONSTD menu and press Enter.
4. Use the Up/Down button to toggle through each of the nine variables, starting with Altitude, until the desired setting is reached.
5. Press Mode to move through the variables.
6. Press Enter to lock in the selection, then press Mode to continue to the next variable.

Dehumidification of Fresh Air with DCV (Demand Controlled Ventilation) Control

If normal rooftop heating and cooling operation is not adequate for the outdoor humidity level, an energy recovery unit and/or a dehumidification option should be considered.

EconoMi$er IV Preparation

This procedure is used to prepare the EconoMi$er IV for troubleshooting. No troubleshooting or testing is done by performing the following procedure.

NOTE: This procedure requires a 9-v battery, 1.2 kilo-ohm resistor, and a 5.6 kilo-ohm resistor which are not supplied with the EconoMi$er IV.

IMPORTANT: Be sure to record the positions of all potentiometers before starting troubleshooting.

1. Disconnect power at TR and TR1. All LEDs should be off. Exhaust fan contacts should be open.
2. Disconnect device at P and P1.
3. Jumper P to P1.
4. Disconnect wires at T and T1. Place 5.6 kilo-ohm resistor across T and T1.
5. Jumper TR to 1.
6. Jumper TR to N.
7. If connected, remove sensor from terminals SO and +. Connect 1.2 kilo-ohm 4074EJM checkout resistor across terminals SO and +.
8. Put 620-ohm resistor across terminals SR and +.
9. Set minimum position, DCV setpoint, and exhaust potentiometers fully CCW (counterclockwise).
10. Set DCV maximum position potentiometer fully CW (clockwise).

11. Set enthalpy potentiometer to D.
12. Apply power (24 vac) to terminals TR and TR1.

Differential Enthalpy

To check differential enthalpy:

1. Make sure EconoMi$er IV preparation procedure has been performed.
2. Place 620-ohm resistor across SO and +.
3. Place 1.2 kilo-ohm resistor across SR and +. The Free Cool LED should be lit.
4. Remove 620-ohm resistor across SO and +. The Free Cool LED should turn off.
5. Return EconoMi$er IV settings and wiring to normal after completing troubleshooting.

Single Enthalpy

To check single enthalpy:

1. Make sure EconoMi$er IV preparation procedure has been performed.
2. Set the enthalpy potentiometer to A (fully CCW). The Free Cool LED should be lit.
3. Set the enthalpy potentiometer to D (fully CW). The Free Cool LED should turn off.
4. Return EconoMi$er IV settings and wiring to normal after completing troubleshooting.

DCV (Demand Controlled Ventilation) and Power Exhaust

To check DCV and Power Exhaust:

1. Make sure EconoMi$er IV preparation procedure has been performed.
2. Ensure terminals AQ and AQ1 are open. The LED for both DCV and Exhaust should be off. The actuator should be fully closed.
3. Connect a 9-v battery to AQ (positive node) and AQ1 (negative node). The LED for both DCV and Exhaust should turn on. The actuator should drive to between 90 and 95% open.
4. Turn the Exhaust potentiometer CW until the Exhaust LED turns off. The LED should turn off when the potentiometer is approximately 90%. The actuator should remain in position.
5. Turn the DCV setpoint potentiometer CW until the DCV LED turns off. The DCV LED should turn off when the potentiometer is approximately 9-v. The actuator should drive fully closed.
6. Turn the DCV and Exhaust potentiometers CCW until the Exhaust LED turns on. The exhaust contacts will close 30 to 120 seconds after the Exhaust LED turns on.
7. Return EconoMi$er IV settings and wiring to normal after completing troubleshooting.

DCV Minimum and Maximum Position

To check the DCV minimum and maximum position:

1. Make sure EconoMi$er IV preparation procedure has been performed.
2. Connect a 9-v battery to AQ (positive node) and AQ1 (negative node). The DCV LED should turn on. The actuator should drive to between 90 and 95% open.
3. Turn the DCV Maximum Position potentiometer to midpoint. The actuator should drive to between 20 and 80% open.
4. Turn the DCV Maximum Position potentiometer to fully CCW. The actuator should drive fully closed.
5. Turn the Minimum Position potentiometer to midpoint. The actuator should drive to between 20 and 80% open.
6. Turn the Minimum Position Potentiometer fully CW. The actuator should drive fully open.
7. Remove the jumper from TR and N. The actuator should drive fully closed.
8. Return EconoMi$er IV settings and wiring to normal after completing troubleshooting.

Supply-Air Sensor Input

To check supply-air sensor input:

1. Make sure EconoMi$er IV preparation procedure has been performed.
2. Set the Enthalpy potentiometer to A. The Free Cool LED turns on. The actuator should drive to between 20 and 80% open.
3. Remove the 5.6 kilo-ohm resistor and jumper T to T1. The actuator should drive fully open.
4. Remove the jumper across T and T1. The actuator should drive fully closed.
5. Return EconoMi$er IV settings and wiring to normal after completing troubleshooting.

EconoMi$er IV Troubleshooting Completion

This procedure is used to return the EconoMi$er IV to operation. No troubleshooting or testing is done by performing the following procedure.

1. Disconnect power at TR and TR1.
2. Set enthalpy potentiometer to previous setting.
3. Set DCV maximum position potentiometer to previous setting.
4. Set minimum position, DCV setpoint, and exhaust potentiometers to previous settings.
5. Remove 620-ohm resistor from terminals SR and +.
6. Remove 1.2 kilo-ohm checkout resistor from terminals SO and +. If used, reconnect sensor from terminals SO and +.
7. Remove jumper from TR to N.
8. Remove jumper from TR to 1.
9. Remove 5.6 kilo-ohm resistor from T and T1. Reconnect wires at T and T1.
10. Remove jumper from P to P1. Reconnect device at P and P1.
11. Apply power (24 vac) to terminals TR and TR1.

WIRING DIAGRAMS

See Fig. 85, 86 and 87 for typical wiring diagrams.

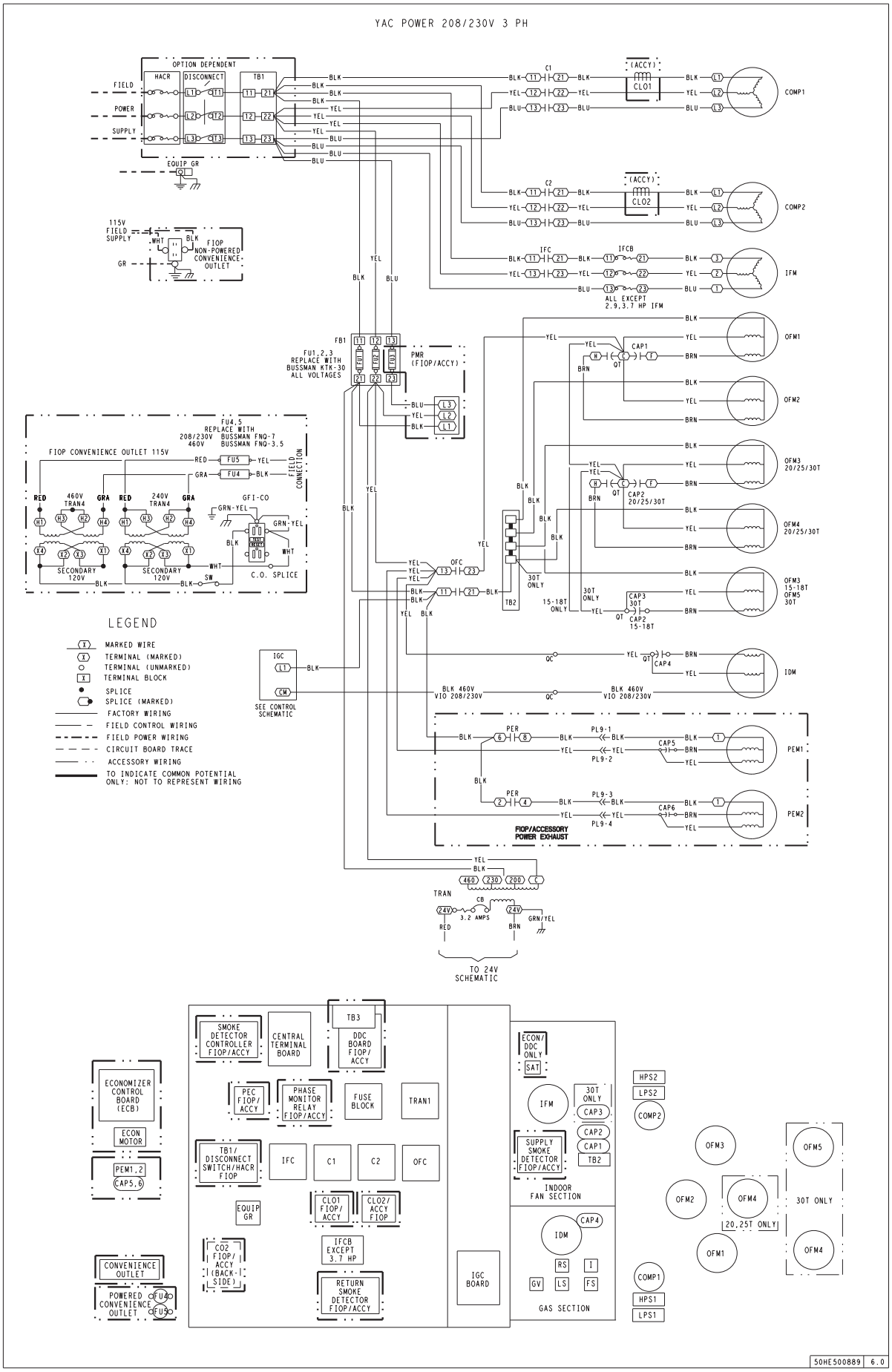

C09510

Fig. 85 - Typical Power Diagram-208/230-3-60

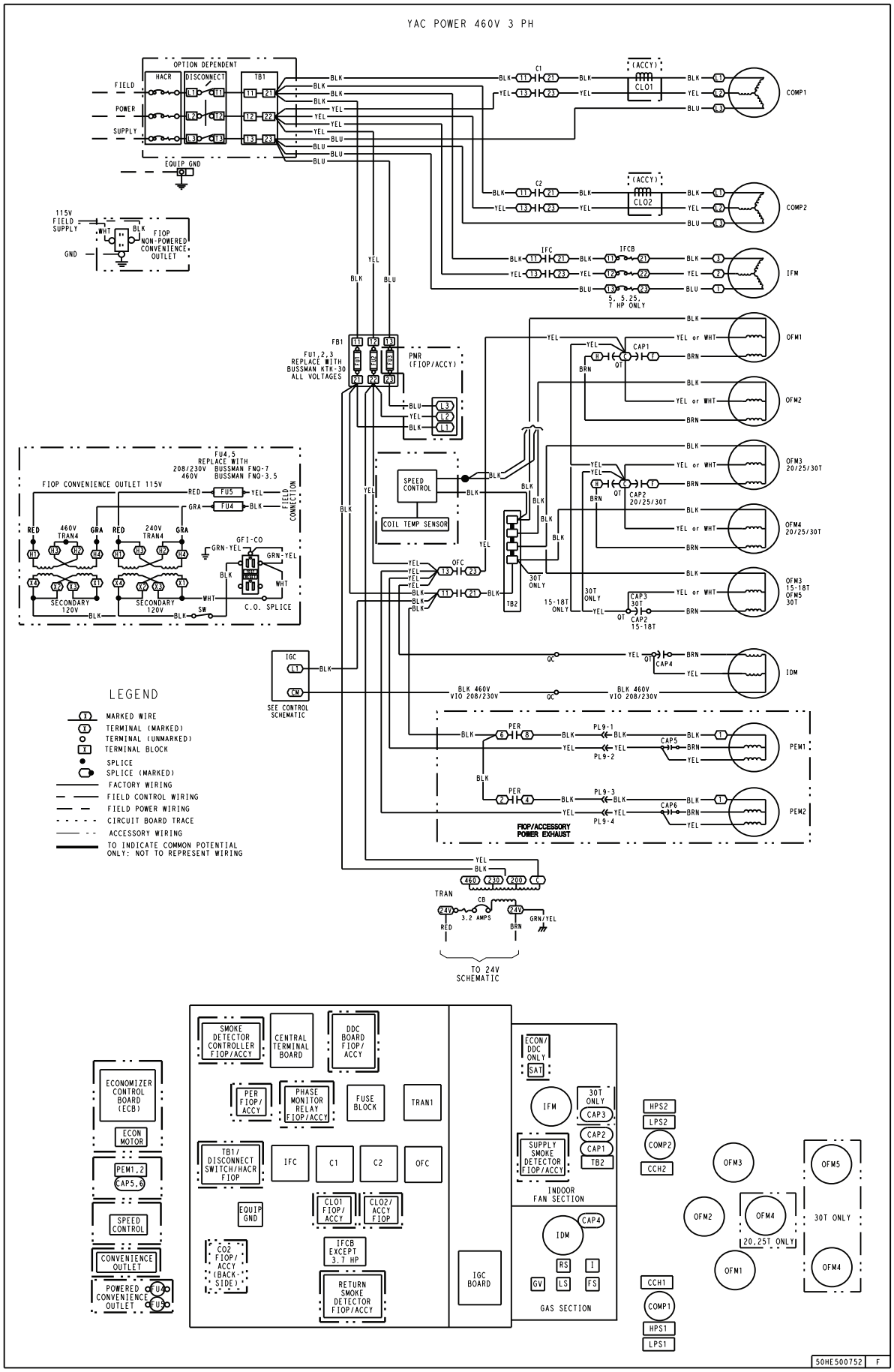

C10353

Fig. 86 - Typical Power Diagram-460-3-60

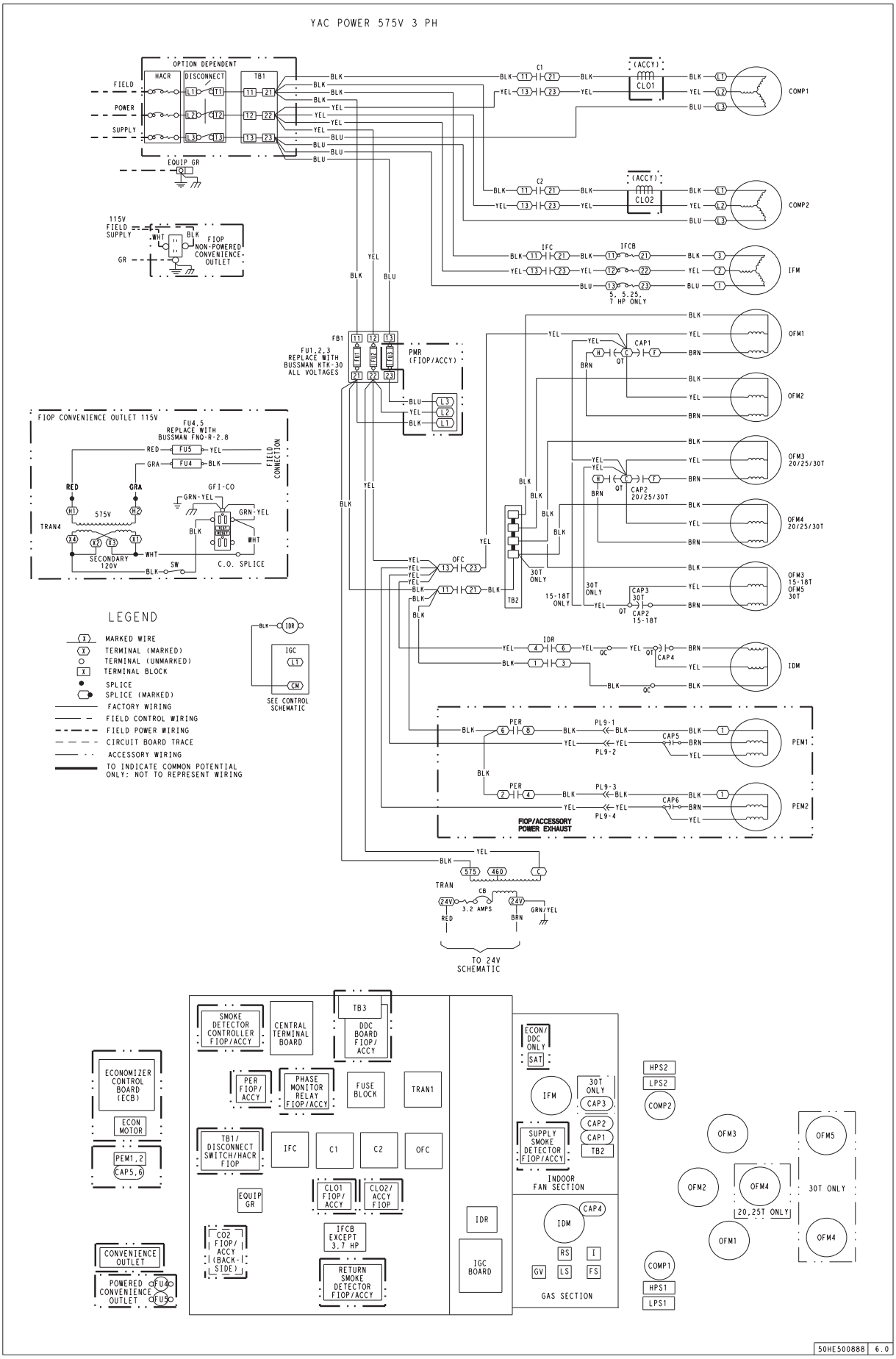

C09512

Fig. 87 - Typical Power Diagram-575-3-60

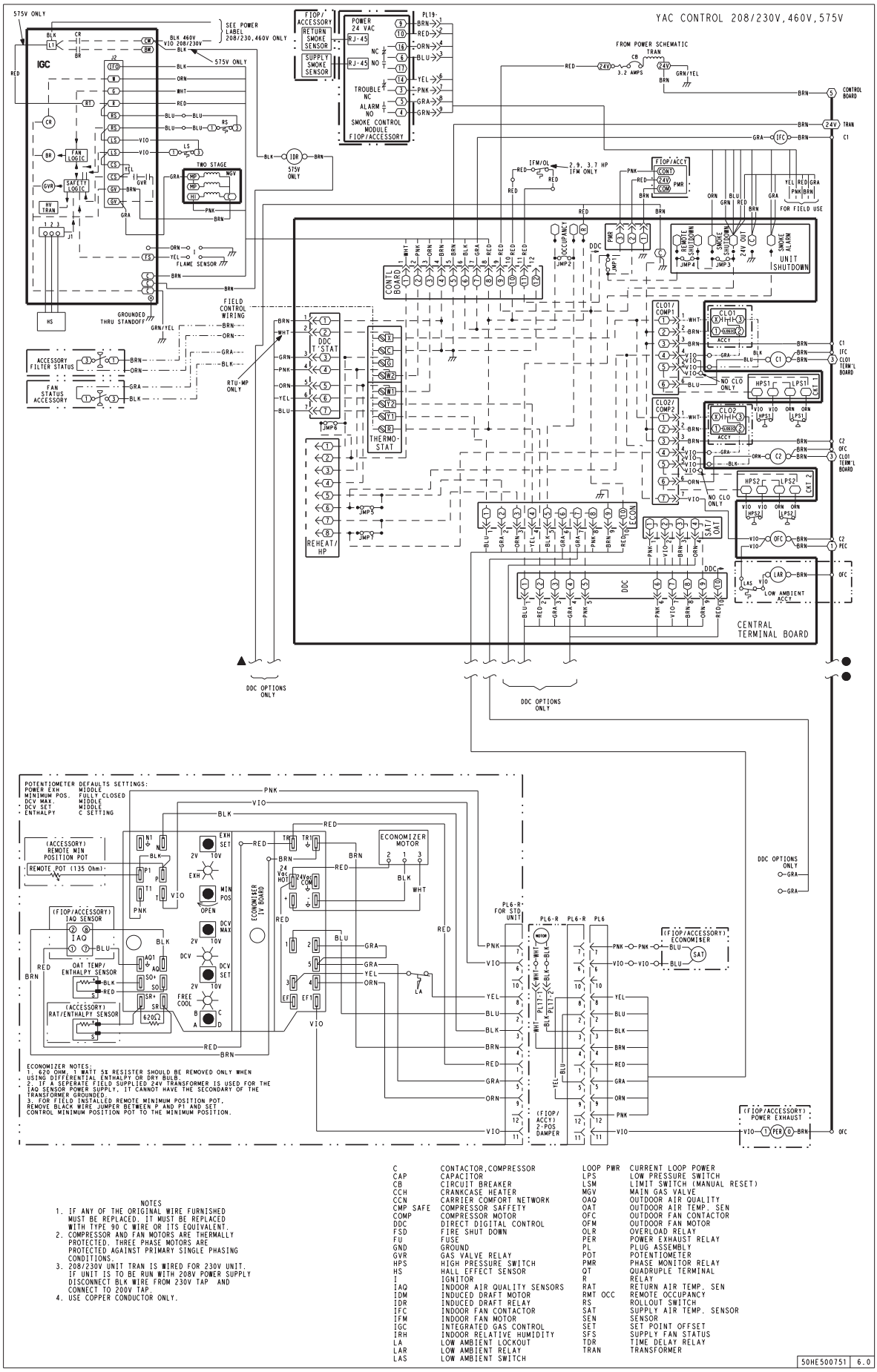

C09509

Fig. 88 - Typical Control Diagram

PRE-START-UP

⚠ WARNING

PERSONAL INJURY HAZARD

Failure to follow this warning could result in personal injury or death.

1. Follow recognized safety practices and wear protective goggles when checking or servicing refrigerant system.
2. Do not operate compressor or provide any electric power to unit unless compressor terminal cover is in place and secured.
3. Do not remove compressor terminal cover until all electrical sources are disconnected.
4. Relieve all pressure from system before touching or disturbing anything inside terminal box if refrigerant leak is suspected around compressor terminals.
5. Never attempt to repair soldered connection while refrigerant system is under pressure.
6. Do not use torch to remove any component. System contains oil and refrigerant under pressure. To remove a component, wear protective goggles and proceed as follows:
   a. Shut off electrical power and then gas to unit.
   b. Recover refrigerant to relieve all pressure from system using both high-pressure and low pressure ports.
   c. Cut component connection tubing with tubing cutter and remove component from unit.
   d. Carefully unsweat remaining tubing stubs when necessary. Oil can ignite when exposed to torch flame.

⚠ WARNING

ELECTRICAL OPERATION HAZARD

Failure to follow this warning could result in personal injury or death.

The unit must be electrically grounded in accordance with local codes and NEC ANSI/NFPA 70 (American National Standards Institute/National Fire Protection Association.)

Proceed as follows to inspect and prepare the unit for initial start-up:

1. Remove all access panels.
2. Read and follow instructions on all WARNING, CAUTION, and INFORMATION labels attached to, or shipped with, unit.

⚠ WARNING

PERSONAL INJURY AND ENVIRONMENTAL HAZARD

Failure to follow this warning could result in personal injury or death.

Relieve pressure and recover all refrigerant before system repair or final unit disposal.

Wear safety glasses and gloves when handling refrigerants.

Keep torches and other ignition sources away from refrigerants and oils.

3. Make the following inspections:
   a. Inspect for shipping and handling damages such as broken lines, loose parts, or disconnected wires, etc.
   b. Inspect for oil at all refrigerant tubing connections and on unit base. Detecting oil generally indicates a refrigerant leak. Leak-test all refrigerant tubing connections using electronic leak detector, halide torch, or liquid-soap solution.
   c. Inspect all field-wiring and factory-wiring connections. Be sure that connections are completed and tight. Be sure that wires are not in contact with refrigerant tubing or sharp edges.
   d. Inspect coil fins. If damaged during shipping and handling, carefully straighten fins with a fin comb.
4. Verify the following conditions:
   a. Make sure that condenser-fan blades are correctly positioned in fan orifice. See Condenser-Fan Adjustment section for more details.
   b. Make sure that air filter(s) are in place.
   c. Make sure that condensate drain trap is filled with water to ensure proper drainage.
   d. Make sure that all tools and miscellaneous loose parts have been removed.

START-UP, GENERAL

Unit Preparation

Make sure that unit has been installed in accordance with installation instructions and applicable codes.

Gas Piping

Check gas piping for leaks.

⚠ WARNING

UNIT OPERATION AND SAFETY HAZARD

Failure to follow this warning could result in personal injury or death.

Disconnect gas piping from unit when leak testing at pressure greater than 1/2 psig. Pressures greater than 1/2 psig will cause gas valve damage resulting in hazardous condition. If gas valve is subjected to pressure greater than 1/2 psig, it must be replaced before use. When pressure testing field-supplied gas piping at pressures of 1/2 psig or less, a unit connected to such piping must be isolated by manually closing the gas valve.

Return-Air Filters

Make sure correct filters are installed and clean prior to starting unit. (see Appendix II - Physical Data). Do not operate unit without return-air filters.

Outdoor-Air Inlet Screens

Outdoor-air inlet screen must be in place before operating unit.

Compressor Mounting

Compressors are internally spring mounted. Do not loosen or remove compressor hold down bolts.

Internal Wiring

Check all factory and field electrical connections for tightness. Tighten as required.

Refrigerant Service Ports

Each unit system has two 1/4" SAE flare (with schrader valves) service ports: one on the suction line, and one on the compressor discharge line. These schraders use black plastic caps with an O-ring inside the cap. Should this O-ring be blown or fall out, refrigerant may leak out of schrader port. Be sure that caps on the ports are tight.

Compressor Rotation

On 3-phase units with scroll compressors, it is important to be certain compressor is rotating in the proper direction. To determine whether or not compressor is rotating in the proper direction:

1. Connect service gauges to suction and discharge pressure fittings.
2. Energize the compressor.
3. The suction pressure should drop and the discharge pressure should rise, as is normal on any start-up.

If the suction pressure does not drop and the discharge pressure does not rise to normal levels:

4. Note that the evaporator fan is probably also rotating in the wrong direction.
5. Turn off power to the unit and install lockout tag.
6. Reverse any two of the unit power leads.
7. Re-energize to the compressor. Check pressures.

The suction and discharge pressure levels should now move to their normal start-up levels.

NOTE: When the compressor is rotating in the wrong direction, the unit will make an elevated level of noise and will not provide cooling.

Cooling

Set space thermostat to OFF position. To start unit, turn on main power supply. Set system selector switch at COOL position and fan switch at AUTO. position. Adjust thermostat to a setting approximately 5°F (3°C) below room temperature. Both compressors start on closure of contactors.

Check unit charge. Allow system to operate a minimum of 15 minutes prior to checking refrigerant charge. Refer to Refrigerant Charge section.

Reset thermostat at a position above room temperature. Both compressors will shut off. Evaporator fan will shut off immediately.

To shut off unit, set system selector switch at OFF position. Resetting thermostat at a position above room temperature shuts unit off temporarily until space temperature exceeds thermostat setting.

Main Burners

Main burners are factory set and should require no adjustment.

To check ignition of main burners and heating controls, move thermostat setpoint above room temperature and verify that the burners light and evaporator fan is energized. Check heating effect, then lower the thermostat setting below the room temperature and verify that the burners and evaporator fan turn off.

Refer to Table 11 for the correct orifice to use at high altitudes.

Heating

1. Purge gas supply line of air by opening union ahead of the gas valve. When gas odor is detected, tighten union and wait 5 minutes before proceeding.
2. Turn on electrical supply and manual gas valve.
3. Set system switch selector at HEAT position and fan switch at AUTO. or ON position. Set heating temperature lever above room temperature.
4. The induced-draft motor will start.
5. After a call for heating, the main burners should light within 5 seconds. If the burner does not light, then there is a 22-second delay before another 5-second try. If the burner still does not light, the time delay is repeated. If the burner does not light within 15 minutes, there is a lockout. To reset the control, break the 24 v power to W1.
6. The evaporator-fan motor will turn on 45 seconds after burner ignition.

7. The evaporator-fan motor will turn off in 45 seconds after the thermostat temperature is satisfied.
8. Adjust airflow to obtain a temperature rise within the range specified on the unit nameplate.

NOTE: The default value for the evaporator-fan motor on/off delay is 45 seconds. The Integrated Gas Unit Controller (IGC) modifies this value when abnormal limit switch cycles occur. Based upon unit operating conditions, the on delay can be reduced to 0 seconds and the off delay can be extended to 180 seconds.

If the limit switch trips at the start of the heating cycle during the evaporator on delay, the time period of the on delay for the next cycle will be 5 seconds less than the time at which the switch tripped. (Example: If the limit switch trips at 30 seconds, the evaporator-fan on delay for the next cycle will occur at 25 seconds.) To prevent short-cycling, a 5-second reduction will only occur if a minimum of 10 minutes has elapsed since the last call for heating.

The evaporator-fan off delay can also be modified. Once the call for heating has ended, there is a 10-minute period during which the modification can occur. If the limit switch trips during this period, the evaporator-fan off delay will increase by 15 seconds. A maximum of 9 trips can occur, extending the evaporator-fan off delay to 180 seconds.

To restore the original default value, reset the power to the unit.

To shut off unit, set system selector switch at OFF position. Resetting heating selector lever below room temperature will temporarily shut unit off until space temperature falls below thermostat setting.

Ventilation (Continuous Fan)

Set fan and system selector switches at ON and OFF positions, respectively. Evaporator fan operates continuously to provide constant air circulation. When the evaporator-fan selector switch is turned to the OFF position, there is a 30-second delay before the fan turns off.

START-UP, PREMIERLINK™ CONTROLS

Use the Carrier network communication software to start up and configure the PremierLink controller.

Changes can be made using the ComfortWORKS® software, ComfortVIEW™ software, Network Service Tool, System Pilot™ device, or Touch Pilot™ device. The System Pilot and Touch Pilot are portable interface devices that allow the user to change system set-up and setpoints from a zone sensor or terminal control module. During start-up, the Carrier software can also be used to verify communication with PremierLink controller.

NOTE: All set-up and setpoint configurations are factory set and field-adjustable.

For specific operating instructions, refer to the literature provided with user interface software.

Perform System Check-Out

1. Check correctness and tightness of all power and communication connections.
2. At the unit, check fan and system controls for proper operation.
3. At the unit, check electrical system and connections of any optional electric reheat coil.
4. Check to be sure the area around the unit is clear of construction dirt and debris.
5. Check that final filters are installed in the unit. Dust and debris can adversely affect system operation.
6. Verify that the PremierLink controls are properly connected to the CCN bus.

Initial Operation and Test

Perform the following procedure:

1. Apply 24 vac power to the control.
2. Connect the service tool to the phone jack service port of the controller.
3. Using the Service Tool, upload the controller from address 0, 31 at 9600 baud rate. The address may be set at this time. Make sure that Service Tool is connected to only one unit when changing the address.

Memory Reset

DIP switch 4 causes an E-squared memory reset to factory defaults after the switch has been moved from position 0 to position 1 and the power has been restored. To enable the feature again, the switch must be put back to the 0 position and power must be restored; this prevents subsequent resets to factory defaults if the switch is left at position 1.

To cause a reset of the non-volatile memory (to factory defaults), turn the controller power off if it is on, move the switch from position 1 to position 0, and then apply power to the controller for a minimum of 5 seconds. At this point, no action occurs, but the controller is now ready for the memory to reset. Remove power to the controller again and move the switch from position 0 to position 1. This time, when power is applied, the memory will reset to factory defaults. The controller address will return to bus 0 element 31, indicating that memory reset occurred.

Refer to Rooftop PremierLink Installation, Start-Up, and Configuration Instructions (Form 33CS-58SI) for full discussion on configuring the PremierLink control system.

START-UP, RTU-MP CONTROL

Field Service Test, explained below, will assist in proper start-up. Configuration of unit parameters, scheduling options, and operation are also discussed in this section.

Field Service Test

The Field Service Test function can be used to verify proper operation of compressors, heating stages, indoor fan, power exhaust fans, economizer, and dehumidification. Use of Field Service Test is recommended at initial system start up and during troubleshooting. See RTU-MP Controls, Start-Up, Operation, and Troubleshooting Instructions (Form 48-50H-T-2T), Appendix A for Field Service Test Mode table.

Field Service Test mode has the following changes from normal operation:

- Outdoor air temperature limits for cooling circuits, economizer, and heating are ignored.
- Normal compressor time guards and other staging delays are ignored.
- The status of Alarms (except Fire and Safety chain) is ignored but all alerts and alarms are still broadcasted on the network.

Field Service Test can be turned ON/OFF at the unit display or from the network. Once turned ON, other entries may be made with the display or through the network. To turn Field Service Test on, change the value of Test Mode to ON, to turn Field Service Test off, change the value of Test Mode to OFF.

NOTE: Service Test mode is password protected when accessing from the display. Depending on the unit model, factory-installed options, and field-installed accessories, some of the Field Service Test functions may not apply.

The independent outputs (IndpOutputs) submenu is used to change output status for the supply fan, economizer, and Power Exhaust. These independent outputs can operate simultaneously with other Field Service Test modes. All outputs return to normal operation when Field Service Test is turned off.

The Cooling submenu is used to change output status for the individual compressors and the dehumidification relay. Compressor starts are not staggered. The fans and heating service test outputs are reset to OFF for the cooling service test. Indoor fans and outdoor fans are controlled normally to maintain proper unit operation. All normal cooling alarms and alerts are functional.

NOTE: Circuit A is always operated with Circuit B due to outdoor fan control on Circuit A. Always test Circuit A first, and leave it on to test other Circuits.

The Heating submenu is used to change output status for the individual heat stages, gas or electric. The fans and cooling service test outputs are reset to OFF for the heating service test. All normal heating alarms and alerts are functional.

Configuration

The RTU-MP controller configuration points affect the unit operation and/or control. Review and understand the meaning and purpose of each configuration point before changing it from the factory default value. The submenus containing configuration points are as follows: Unit, Cooling, Heating, Inputs, Economizer, IAQ, Clock-Set, and User Password (USERPW). Each configuration point is described below under its according submenu. See RTU-MP Controls, Start-Up, Operation, and Troubleshooting Instructions (Form 48-50H-T-2T), Appendix for display tables.

Unit

Start Delay

This refers to the time delay the unit will wait after power up before it pursues any specific operation.

Factory Default = 5 sec
Range = 0-600 sec

Filter Service Hours

This refers to the timer set for the Dirty Filter Alarm. After the number of runtime hours set on this point is exceeded the corresponding alarm will be generated, and must be manually cleared on the alarm reset screen after the maintenance has been completed. The timer will then begin counting its runtime again for the next maintenance interval.

Factory Default = 600 hr

NOTE: Setting this configuration timer to 0, disables the alarm.

Supply Fan Service Hours

This refers to the timer set for the Supply Fan Runtime Alarm. After the number of runtime hours set on this point is exceeded the corresponding alarm will be generated, and must be manually cleared on the alarm reset screen after the maintenance has been completed. The timer will then begin counting its runtime again for the next maintenance interval.

Factory Default = 0 hr

NOTE: Setting this configuration timer to 0, disables the alarm.

Compressor1 Service Hours

This refers to the timer set for the Compressor 1 Runtime Alarm. After the number of runtime hours set on this point is exceeded the corresponding alarm will be generated, and must be manually cleared on the alarm reset screen after the maintenance has been completed. The timer will then begin counting its runtime again for the next maintenance interval. Factory Default = 0 hr

NOTE: Setting this configuration timer to 0, disables the alarm.

Compressor2 Service Hours

This refers to the timer set for the Compressor 2 Runtime Alarm. After the number of hours set on this point is exceeded the corresponding alarm will be generated, and must be manually cleared on the alarm rest screen after the maintenance has been completed. The timer will then begin counting its runtime again for the next maintenance interval

Factory Default = 0 hr

NOTE: Setting this configuration timer to 0, disables the alarm.

Cooling

Number of Compressor Stages

This refers to the number of mechanical cooling stages available on a specific unit. Set this point to "One Stage" if there is one compressor in the specific unit, set to "Two Stage" if there are two compressors in the unit, and set to "None" if economizer cooling ONLY is desired.

Factory Default = One Stage for 1 compressor units
Two Stage for 2 compressor units

Cooling/Econ SAT Low Setpt

The supply air temperature must remain above this value to allow cooling with the economizer and/or compressors. There is 5°F plus and minus deadband to this point. If the SAT falls below this value during cooling, all compressors will be staged off. The economizer will start to ramp down to minimum position when the SAT = this configuration +5°F.

Factory Default = 50°F
Range = 45-75°F

Cooling Lockout Temp

This defines the minimum outdoor air temperature that cooling mode can be enabled and run. If the OAT falls below this threshold during cooling, then compressor cooling will not be allowed.

Factory Default = 45°F
Range = 0-65°F

Heating

Heating SAT High Setpt

The supply air temperature must remain below this value to allow heating. There is 5°F plus and minus deadband to this point. If the SAT rises above this value during heating the heat stages will begin to decrease until the SAT has dropped below this value.

Factory Default = 120°F
Range = 95-150°F

Heating Lockout Temp

This defines the maximum outdoor air temperature that heating mode can be enabled and run. If the OAT rises above this threshold during heating, then heating will not be allowed.

Factory Default = 65°F
Range = 49-95°F

Inputs

NOTE: For installation of inputs and field installed accessories, refer to the appropriate sections.

Input 3

This input is a discrete input and can be configured to be one of five different inputs: No Function, Compressor Safety, Fan Status, Filter Status, or Remote Occupancy. This input can also be configured to be either Normally Open (N/O) or Normally Closed (N/C). Input 3 is factory wired to pin J1-2. Field accessories get wired to its parallel pin J5-5. Do not connect inputs to both locations, one function per input.

Factory Default = Compressor Safety and N/O

NOTE: Compressor Safety input comes from the CLO board. J1-2 is always factory wired to TB1-8 (X) terminal on the unit. If the unit has a CLO board, do not configure input 3 for anything but Compressor Safety.

Input 5

This input is a discrete input and can be configured to be one of five different inputs: No Function, Fire Shutdown, Fan Status, Filter Status, or Remote Occupancy. This input can also be configured to be either Normally Open (N/O) or Normally Closed (N/C). Input 5 is factory wired to pin J1-10. Field accessories get wired to its parallel pin J5-3. Do not connect inputs to both locations, one function per input.

Factory Default = Fire Shutdown and N/C

NOTE: Fire Shutdown input comes from TB4-7. J1-10 is always factory wired to TB4-7. Only change input 5s function if absolutely needed.

Input 8

This input is a discrete input and can be configured to be one of five different inputs: No Function, Enthalpy Switch, Fan Status, Filter Status, or Remote Occupancy. This input can also be configured to be either Normally Open (N/O) or Normally Closed (N/C). Input 8 is factory wired to pin J2-6. Field accessories get wired to its parallel pin J5-1. Do not connect inputs to both locations, one function per input.

Factory Default = No Function and N/O

Input 9

This input is a discrete input and can be configured to be one of five different inputs: No Function, Humidistat, Fan Status, Filter Status, or Remote Occupancy. This input can also be configured to be either Normally Open (N/O) or Normally Closed (N/C). Input 9 is factory and field wired to pin J5-7. Do not connect inputs to both locations, one function per input.

Factory Default = Humidistat and N/O

Space Sensor Type

This tells the controller what type of space sensor is installed to run the unit. The three types that can be used are the T55 space sensor, the T56 space sensor, or the RS space sensor.

Factory Default = T55 Type

Input 1 Function

This input is an analog input and can be configured to be one of five different inputs: No Sensor, IAQ Sensor, OAQ Sensor, Space RH Sensor, or Outdoor RH Sensor. Input 1 is wired to pin J4-5.

Factory Default = No Sensor

Input 2 Function

This input is an analog input and can be configured to be one of five different inputs: No Sensor, IAQ Sensor, OAQ Sensor, Space RH Sensor, or Outdoor RH Sensor. Input 2 is wired to pin J4-2.

Factory Default = No Sensor

Setpoint Slider Range

This sets the slider range of the space sensor (with this built in function). The slider is used to offset the current control setpoint.

Factory Default = 5 Δ°F

Range = 0-15 Δ°F

T55/56 Override Duration

This sets the occupancy override duration when the override button is pushed on the space sensor.

Factory Default = 1 hr
Range = 0-24 hr

IAQ Low Reference @ 4mA

This is used when an IAQ sensor is installed on Input 1 or 2. This value is displayed and used when 4mA is seen at the input.

Factory Default = 0 PPM
Range = 0-400 PPM

IAQ High Reference @ 20mA

This is used when an IAQ sensor is installed on Input 1 or 2. This value is displayed and used when 20mA is seen at the input.

Factory Default = 2000 PPM
Range = 0-5000 PPM

NOTE: IAQ low Reference @ 4mA and IAQ High Reference @ 20mA are used to set the linear curve of mA vs. PPM.

OAQ Low Reference @ 4mA

This is used when an OAQ sensor is installed on Input 1 or 2. This value is displayed and used when 4mA is seen at the input.

Factory Default = 0 PPM
Range = 0-400 PPM

OAQ High Reference @ 20mA

This is used when an OAQ sensor is installed on Input 1 or 2. This value is displayed and used when 20mA is seen at the input.

Factory Default = 2000 PPM
Range = 0-5000 PPM

NOTE: OAQ low Reference @ 4mA and OAQ High Reference @ 20mA are used to set the linear curve of mA vs. PPM.

Economizer

Economizer Exists

This point tells the controller if there is an economizer installed on the unit.

Factory Default = NO if no economizer
YES if there is an economizer installed

Economizer Minimum Position

This defines the lowest economizer position when the indoor fan is running and the building is occupied.

Factory Default = 20%
Range = 0-100 %

Economizer High OAT Lockout

If the outdoor air temperature rises above this value, economizer cooling will be disabled and dampers will return and stay at minimum position.

Factory Default = 75°F
Range = 55-80°F

Power Exhaust Setpt

When the economizer damper position opens above this point the power exhaust operation will begin. When the damper position falls 10% below the setpoint, the power exhaust will shutdown.

Factory Default = 50%
Range = 20-90 %

NOTE: This point is only used when Continuous Occ Exhaust = NO

Continuous Occ Exhaust

This point tells the controller when to run the power exhaust if equipped on the unit. If set to YES, the power exhaust will be on all the time when in occupied mode and will be off when in unoccupied mode. If set to NO the power exhaust will be controlled by the Power Exhaust Setpoint.

Factory Default = NO

IAQ

Max Differential CO_2 Setpt

If the difference between indoor an outdoor air quality becomes greater then this value the damper position will stay at the IAQ Greatest Min Dmpr Pos. configuration point

Factory Default = 650 PPM
Range = 300-950 PPM

IAQ Greatest Min Dmpr Pos.

This is the greatest minimum position the economizer will open to while trying to control the indoor air quality, CO_2 differential.

Factory Default = 50% open
Range = 10-60% open

Clockset

This submenu screen allows you to set the date and time manually. The Daylight Savings Time (DST) can also be changed here. The date and time is automatically set when ever software is downloaded. The clock is a 24 hour clock and not am/pm. The time should be verified (and maybe changed) according to unit location and time zone.

Factory Default = Eastern Standard Time

USERPW

This submenu screen allows you to change the user password to a four number password of choice. The User password change screen is only accessible with the Administrator Password (1111). The ADMIN password will always override the user password.

OPERATING SEQUENCES

Base Unit Controls

Cooling, Units Without Economizer

When thermostat calls for Stage 1 cooling, terminals G and Y1 are energized. The indoor-fan contactor (IFC), outdoor fan contactor (OFC) and Compressor 1 contactor (C1) are energized and indoor-fan motor, outdoor fans and Compressor 1 start. The outdoor fan motors runs continuously while unit is in Stage 1 or Stage 2 cooling.

If Stage 1 cooling does not satisfy the space load , the space temperature will rise until thermostat calls for Stage 2 cooling (Y2 closes). Compressor 2 contactor (C2) is energized; Compressor 2 starts and runs.

Heating, Units Without Economizer

When the thermostat calls for heating, terminal W1 is energized. To prevent thermostat short-cycling, the unit is locked into the Heating mode for at least 1 minute when W1 is energized. The induced-draft motor is energized and the burner ignition sequence begins. The indoor (evaporator) fan motor (IFM) is energized 45 seconds after a flame is ignited.

If Stage 1 heating does not satisfy the space load, the space temperature will fall until thermostat calls for Stage 2 heating (W2 closes). Terminal W2 is energized and the high-fire solenoid on the main gas valve (MGV) is energized. Firing rate increases to high-fire. When space load is partially satisfied, terminal W2 is deenergized; the high-fire solenoid is deenergized and heating operation continues on low-fire.

When the space heating load is fully satisfied, thermostat terminal W1 is also deenergized. All heating operations cease. The IFM stops after a 45-second time off delay.

Cooling, Unit With EconoMi$er IV

For Occupied mode operation of EconoMi$er IV, there must be a 24-v signal at terminals TR and N (provided through PL6-3 from the unit's IFC coil). Removing the signal at N places the EconoMi$er IV control in Unoccupied mode.

During Occupied mode operation, indoor fan operation will be accompanied by economizer dampers moving to Minimum Position setpoint for ventilation. If indoor fan is off, dampers will close. During Unoccupied mode operation, dampers will remain closed unless a Cooling (by free cooling) or DCV demand is received.

When free cooling using outside air is not available, the unit cooling sequence will be controlled directly by the space thermostat as described above as Cooling, Unit Without Economizer. Outside air damper position will be closed or Minimum Position as determined by occupancy mode and fan signal.

When free cooling is available as determined by the appropriate changeover command (dry bulb, outdoor enthalpy, differential dry bulb or differential enthalpy), a call for cooling (Y1 closes at the thermostat) will cause the economizer control to modulate the dampers open and closed to maintain the unit supply air temperature at 50 to 55°F. Compressor will not run.

During free cooling operation, a supply air temperature (SAT) above 50°F will cause the dampers to modulate between Minimum Position setpoint and 100% open. With SAT from 50°F to 45°F, the dampers will maintain at the Minimum Position setting. With SAT below 45°F, the outside air dampers will be closed. When SAT rises to 48°F, the dampers will re-open to Minimum Position setting.

Should 100% outside air not be capable of satisfying the space temperature, space temperature will rise until Y2 is closed. The economizer control will call for compressor operation. Dampers will modulate to maintain SAT at 50 to 55°F concurrent with Compressor 1 operation. The Low Ambient Lockout Thermostat will block compressor operation with economizer operation below 42°F outside air temperature.

When space temperature demand is satisfied (thermostat Y1 opens), the dampers will return to Minimum Damper position if indoor fan is running or fully closed if fan is off.

If accessory power exhaust is installed, the power exhaust fan motors will be energized by the economizer control as the dampers open above the PE-On setpoint and will be de--energized as the dampers close below the PE-On setpoint.

Damper movement from full closed to full open (or vice versa) will take between 1-1/2 and 2-1/2 minutes.

Heating With EconoMi$er IV

During Occupied mode operation, indoor fan operation will be accompanied by economizer dampers moving to Minimum Position setpoint for ventilation. If indoor fan is off, dampers will close. During Unoccupied mode operation, dampers will remain closed unless a DCV demand is received.

When the room temperature calls for heat (W1 closes), the heating controls are energized as described in Heating, Unit Without Economizer above.

Demand Controlled Ventilation

If a field-installed CO_2 sensor is connected to the Economize IV control, a Demand Controlled Ventilation strategy will operate automatically. As the CO_2 level in the space increases above the setpoint (on the EconoMi$er IV controller), the minimum position of the dampers will be increased proportionally, until the Maximum Ventilation setting is reached. As the space CO_2 level decreases because of the increase in fresh air, the outdoor-damper will follow the higher demand condition from the DCV mode or from the free-cooling mode.

DCV operation is available in Occupied and Unoccupied periods with EconoMi$er IV. However, a control modification will be required on the 48TC unit to implement the Unoccupied period function.

Supplemental Controls

Compressor Lockout Relay (CLO)

The CLO is available as a factory-installed option or as a field-installed accessory. Each compressor has a CLO. The CLO compares the demand for compressor operation (via a 24-v input from Y at CLO terminal 2) to operation of the compressor (determined via compressor current signal input at the CLO's current transformer loop); if the compressor current signal is lost while the demand input still exists, the CLO will trip open and prevent the compressor from restarting until the CLO has been manually reset. In the lockout condition, 24-v will be available at terminal X. Reset is accomplished by removing the input signal at terminal 2; open the thermostat briefly or cycle the main power to the unit.

Phase Monitor Relay (PMR)

The PMR protects the unit in the event of a loss of a phase or a reversal of power line phase in the three-phase unit power supply. In normal operation, the relay K1 is energized (contact set closed) and red LED indicator is on steady. If the PMR detects a loss of a phase or a phase sequence reversal, the relay K1 is energized, its contact set is opened and unit operation is stopped; red LED indicator will blink during lockout condition. Reset of the PMR is automatic when all phases are restored and phase sequence is correct. If no 24-v control power is available to the PMR, the red LED will be off.

Smoke Detectors

Factory-installed smoke detectors are discussed in detail starting on page 17.

PremierLink™ Control

Thermostat Mode

If the PremierLink controller is configured for Thermostat mode (TSTAT), it will control only to the thermostat inputs on J4. These inputs can be overridden through CCN communication via the CV_TSTAT points display table. When in this mode, the fire safety shutdown (FSD) input cannot be used, so any fire/life safety shutdown must be physically wired to disable the 24 vac control circuit to the unit.

Indoor Fan

The indoor fan output will be energized whenever there is 24 vac present on the G input. The indoor fan will be turned on without any delay and the economizer damper will open to its minimum position if the unit has a damper connected to the controller. This will also occur if the PremierLink controller has been configured for electric heat or heat pump operation.

Cooling

For cooling operation, there must be 24 vac present on G. When G is active, the PremierLink controller will then determine if outdoor conditions are suitable for economizer cooling when an economizer damper is available. A valid OAT, SPT (CCN space temperature) and SAT (supply air temperature) sensor MUST be installed for proper economizer operation. It recommended that an outdoor or differential enthalpy sensor also be installed. If one is not present, then a jumper is needed on the ENTH input on J4, which will indicate that the enthalpy will always be low. Economizer operation will be based only on outdoor air dry bulb temperature. The conditions are suitable when: enthalpy is low, OAT is less than OATL High Lockout for TSTAT, and OAT is less than OATMAX, the high setpoint for free cooling. The default for OATL is 65°F. The default for OATMAX is 75°F.

When all of the above conditions are satisfied and all the required sensors are installed, the PremierLink controller will use the economizer for cooling. One of three different control routines will be used depending on the temperature of the outside air. The routines use a PID loop to control the SAT to a supply air setpoint (SASP) based on the error from setpoint (SASPSAT). The SASP is determined by the routine.

If an economizer is not available or the conditions are not met for the following economizer routines below, the compressors 1 and 2 will be cycled based on Y1 and Y2 inputs respectively.

Any time the compressors are running, the PremierLink controller will lock out the compressors if the SAT becomes too low. These user configurable settings are found in the SERVICE configuration table:

- Compressor 1 Lockout at SAT < SATLO1 (50 to 65°F) (default is 55°F)
- Compressor 2 Lockout at SAT < SATLO2 (45 to 55°F) (default is 50°F)

After a compressor is locked out, it may be started again after a normal time-guard period and the supply-air temperature has increased at least 8°F above the lockout setpoint.

- **Routine No. 1**: If the OAT ≤ DXLOCK (OAT DX lockout temperature) and DX Cooling Lockout is enabled when Y1 input is energized, the economizer will be modulated to maintain SAT at the Supply Air Setpoint (SASP) = SATLO1 + 3 °F (Supply Air Low Temp lockout for compressor 1). When Y2 is energized, the economizer will be modulated to control to a lower SASP = SATLO2 + 3°F (Supply Air Low Temp lockout for compressor no. 2). Mechanical cooling is locked out and will not be energized.

- **Routine No. 2**: If DXLOCK (or DX Cooling Lockout is disabled) < OAT ≤ 68°F when Y1 input is energized, the economizer will be modulated to maintain SAT at SASP = SATLO1 + 3°F. If the SAT > SASP + 5°F and the economizer position > 85% then the economizer will close the to minimum position for three minutes or until the SAT > 68°F. The economizer integrator will then be reset and begin modulating to maintain the SASP after stage one has been energized for 90 seconds.

  When Y2 is energized, the economizer will be modulated to control to a lower supply air setpoint SASP= SATLO2 + 3°F If the SAT > SASP + 5°F it will close the economizer to minimum position for 3 minutes, reset the integrator for the economizer, then start modulating the economizer to maintain the SASP after the stage two has been on for 90 seconds. This provides protection for the compressor against flooded starts and allow refrigerant flow to stabilize before modulating the economizer again. By using return air across the evaporator coil just after the compressor has started allows for increased refrigerant flow rates providing better oil return of any oil washed out during compressor start-up.
- **Routine No. 3**: If the OAT > 68°F and the enthalpy is low and the OAT < SPT then the economizer will open to 100% and compressors 1 and 2 will be cycled based on Y1 and Y2 inputs respectively. If any of these conditions are not met the economizer will go to minimum position.

  If there is no call for heating or cooling, the economizer, if available, will maintain the SASP at 70°F.

Heating

For gas or electric heat, HS1 and HS2 outputs will follow W1 and W2 inputs respectively. The fan will also be turned on if it is configured for electric heat.

Heating may also be energized when an IAQ sensor installed and has overridden the minimum economizer damper position. If the OAT < 55°F and an IAQ sensor is installed and the IAQ minimum position > minimum damper position causing the SAT to decrease below the SPT - 10°F, then the heat stages will be cycled to temper the SAT to maintain a temperature between the SPT and the SPT + 10°F.

Auxiliary Relay Configured for Exhaust Fan

If the Auxiliary Relay is configured for exhaust fan (AUXOUT = 1) in the CONFIG configuration table and Continuous Power Exhaust (MODPE) is enable in the SERVICE configuration table then the output (HS3) will be energized whenever the G input is on. If the MODPE is disabled then output will be energized based on the Power Exhaust Setpoint (PES) in the SETPOINT table.

Indoor Air Quality

If the optional indoor air quality (IAQI) sensor is installed, the PremierLink controller will maintain indoor air quality within the space at the user-configured differential setpoint (IAQD) in the CONFIG configuration table. The setpoint is the difference between the IAQI and an optional outdoor air quality sensor (OAQ). If the OAQ is not present then a fixed value of 400 ppm is used. The actual space IAQ setpoint (IAQS) is calculated as follows: IAQS = IAQD + OAQ (OAQ = 400 ppm if not present)

As air quality within the space changes, the minimum position of the economizer damper will be changed also thus allowing more or less outdoor air into the space depending on the relationship of the IAQI to the IAQS. The IAQ algorithm runs every 30 seconds and calculates IAQ minimum position value using a PID loop on the IAQI deviation from the IAQS. The IAQ minimum position is then compared against the user configured minimum position (MDP) and the greatest value becomes the final minimum damper position (IQMP). If the calculated IAQ Minimum Position is greater than the IAQ maximum damper position (IAQMAXP) decision in the SERVICE configuration table, then it will be clamped to IAQMAXP value.

If IAQ is configured for low priority, the positioning of the economizer damper can be overridden by comfort requirements. If the SAT < SASP -8°F and both stages of heat are on for more then 4 minutes or the SAT > SASP + 5°F and both stages of cooling on for more then 4 minutes then the IAQ minimum damper position will become 0 and the IQMP = MDP. IAQ mode will resume when the SAT > SASP -8°F in heating or the SAT < SASP + 5°F in cooling.

If the PremierLink controller is configured for 1 stage of heat and cool or is only using a single stage thermostat input, this function will not work as it requires the both Y1 and Y2 or W1 and W2 inputs to be active. In this application, it is recommended that the user configure IAQ priority for high.

If IAQ is configured for high priority and the OAT < 55°F and the SAT < (SPT -10°F), the algorithm will enable the heat stages to maintain the SAT between the SPT and the SPT + 10°F.

CCN Sensor Mode

When the PremierLink™ controller is configured for CCN control, it will control the compressor, economizer and heating outputs based its own space temperature input and setpoints or those received from Linkage. An optional CO_2 IAQ sensor mounted in the space or received through communications can also influence the economizer and heating outputs. The PremierLink controller does not have a hardware clock so it must have another device on the CCN communication bus broadcasting time. The controller will maintain its own time once it has received time as long as it has power and will send a request for time once a minute until it receives time when it has lost power and power is restored. The controller will control to unoccupied setpoints until it has received a valid time. The controller must have valid time in order to perform any broadcast function, follow an occupancy schedule, perform IAQ pre-occupancy purge and many other functions as well. The following sections describe the operation for the functions of the PremierLink controller.

Indoor Fan

The indoor fan will be turned on whenever any one of the following conditions are met:

- If the PremierLink controller is in the occupied mode and ASHRAE 90.1 Supply Fan is configured for Yes in the CONFIG table. This will be determined by its own internal occupancy schedule if it is programmed to follow its local schedule or broadcast its local schedule as a global schedule, or following a global schedule broadcast by another device.
- If PremierLink controller is in the occupied mode and ASHRAE 90.1 Supply Fan is configured for No and there is a heat or cool demand (fan auto mode)
- If the PremierLink controller is in the occupied mode and ASHRAE 90.1 Supply Fan is configured for Yes when Linkage is active and the Linkage Coordinator device is sending an occupied mode flag
- When Temperature Compensated Start is active
- When Free Cool is active
- When Pre-Occupancy Purge is active
- Whenever there is a demand for cooling or heating in the unoccupied mode
- Whenever the Remote Contact input is configured for Remote Contact (RC_DC=1 in SERVICE table) and it is closed or the point is forced Closed via communications in the STATUS01 points display table (remote contact closed = occupied, remote contact open = unoccupied)
- Whenever the H3_EX_RV point is configured for Dehumidification (AUXOUT=5 in CONFIG table) and it is in the unoccupied mode and the indoor RH exceeds the unoccupied humidity setpoint
- Whenever the Supply Fan Relay point is forced On in the STATUS01 points display table

The fan will also continue to run as long as compressors are on when transitioning from occupied to unoccupied with the exception of Fire Shutdown mode. If the Fire Shutdown input point is closed or forced in the STATUS01 points display table, the fan will be shutdown immediately regardless of the occupancy state or demand.

The PremierLink controller has an optional Supply Fan Status input to provide proof of airflow. If this is enabled, the point will look for a contact closure whenever the Supply Fan Relay is on. If the input is not enabled, then it will always be the same state as the Supply Fan Relay. The cooling, economizer and heating routines will use this input point for fan status.

Cooling

The compressors are controlled by the Cooling Control Loop that is used to calculate the desired SAT needed to satisfy the space. It will compare the SPT to the Occupied Cool Setpoint (OCSP) + the T56 slider offset (STO) when occupied and the Unoccupied Cool Setpoint (UCSP + Unoccupied Cooling Deadband) if unoccupied to calculate a Cooling Submaster Reference (CCSR) that is then used by the staging algorithm (Cooling submaster loop) to calculate the required number of cooling stages. The economizer, if available, will be used as the first stage of cooling in addition to the compressors. This loop runs every minute. The following conditions must be met in order for this algorithm to run:

- Indoor fan has been ON for at least 30 seconds
- Heat mode is not active and the time guard between modes equals zero.
- Mode is occupied or the Temperature Compensated Start or Cool mode is active
- SPT reading is available and > (OCSP + STO)
- If mode is unoccupied and the SPT > (UCSP + Unoccupied Cooling Deadband). The indoor fan will be turned on by the staging algorithm.
- OAT > DXLOCK or OAT DX Lockout is disabled

If all of the above conditions are met, the CCSR will be calculated, otherwise it is set to its maximum value and DX stages is set to 0. If only the last condition is not true and an economizer is available, it will be used to cool the space.

The submaster loop uses the CCSR compared to the actual SAT to determine the required number of capacity stages to satisfy the load. There is a programmable minimum internal time delay of 3 to 5 minutes on and 2 to 5 minutes off for the compressors to prevent short cycling. There is also a 3-minute time delay before bringing on the second stage compressor. If the PremierLink controller is configured for Heat Pump and AUXOUT is configured for Reversing Valve Cool, the H3_EX_RV output will energize 2 seconds after the first compressor is energized and stay energized until there is a demand for heat. If AUXOUT is configured for Reversing Valve Heat, then the H3_EX_RV contact will be deenergized when there is a demand for cooling. An internal 5 to 10-minute user-programmable time guard between modes prevents rapid cycling between modes when used in a single zone application. The Time Guard is lowered to 3 minutes when Linkage is active to allow the 3V™ linkage coordinator to have better control of the PremierLink controller when used as the air source for the 3V control system.

Table 30 indicates the number of stages available. The staging algorithm looks at the number of stages available based the number of cool stages configured in the SERVICE configuration table. The algorithm will skip the economizer if it is not available and turn on a compressor.

Table 30 – Available Cooling Stages

NUMBER OF STAGES	0	1 (ECONOMIZER*)	2	3
Compressor 1	Off	Off	On	On
Compressor 2	Off	Off	Off	On

* If conditions are suitable for economizer operation.

Any time the compressors are running, the PremierLink controller will lockout the compressors if the SAT becomes too low. These user configurable settings are found in the SERVICE configuration table:

Compressor 1 Lockout at SAT < SATLO1 (50 to 65°F) (default is 55°F)

Compressor 2 Lockout at SAT < SATLO2 (45 to 55°F) (default is 50°F)

After a compressor is locked out, it may be started again after a normal time-guard period and the supply air temperature has increased at least 8°F above the lockout setpoint.

Dehumidification

The PremierLink controller will provide occupied and unoccupied dehumidification control when AUXOUT = 5 in the CONFIG table and is installed on HVAC units that are equipped with additional controls and accessories to accomplish this function. This function also requires a space relative humidity sensor be installed on the OAQ/IRH input.

When in the occupied mode and the indoor relative humidity is greater then the Occupied High Humidity setpoint, then the H3_EX_RV output point will be energized. When in the unoccupied mode and indoor relative humidity is greater then the Unoccupied High Humidity setpoint, then the H3_EX_RV output point and supply fan output will be energized. There is a fixed 5% hysteresis that the indoor relative humidity must drop below the active setpoint to end the dehumidification mode and deenergize the H3_EX_RV output. If the PremierLink controller is in the unoccupied mode, then the fan relay will deenergize if there is no other mode requiring to the fan to be on. This function will not energize mechanical cooling as a result of the indoor relative humidity exceeding either setpoint.

A high humidity alarm will be generated if the indoor relative humidity exceeds the high humidity setpoint by the amount configured in the Control Humidity Hysteresis in the ALARMS table for 20 minutes. The alarm will return to normal when the indoor relative humidity drops 3% below the active humidity setpoint.

Economizer

The economizer dampers are used to provide free cooling and indoor air quality if optional CO_2 sensor is installed and when the outside conditions are suitable. Temperature control is accomplished by controlling the SAT to a certain level determined by the Economizer PID Loop by calculating a submaster reference (ECONSR) value. This algorithm will calculate the submaster reference temperature (ECONSR) based on OAT and enthalpy conditions and cooling requirements. The ECONSR value is then passed to the Economizer Submaster Loop, which will modulate dampers to maintain SAT at ECONSR level.

The following conditions are required to determine if economizer cooling is possible:

- Indoor fan has been on for at least 30 seconds
- Enthalpy is low
- SAT reading is available
- OAT reading is available
- SPT reading is available
- OAT ≤ SPT
- OAT < OATMAX (OATMAX default is 75°F)
- Economizer position is NOT forced

If any of the above conditions are not met, the ECONSR will be set to its MAX limit of 120°F and the damper will go to its configured minimum position. The minimum damper position can be overridden by the IAQ routine described later in this section.

The calculation for ECONSR is as follows:

- ECONSR = PID function on (setpoint - SPT), where:

  Setpoint = ((OCSP+STO) + (OHSP+STO))/2 when NTLO (Unoccupied Free Cool OAT Lockout) < OAT < 68°F
- Setpoint = (OCSP+STO) - 1 when OAT ≤ NTLO
- Setpoint = (OHSP+STO) + 1 when OAT ≥ 68°F

The actual damper position (ECONPOS) is the result of the following calculation. Values represented in the right side of the equation can be found in the SERVICE configuration table descriptions in this manual. Note that that the OAT is taken into consideration to avoid large changes in damper position when the OAT is cold:

- ECONPOS = SubGain x (ECONSR-SAT) + CTRVAL
  where SubGain = (OAT - TEMPBAND) / (ESG + 1)

If the OAT < DXLOCK (DX Cool Lockout setpoint) then the damper will be modulated to maintain the SAT at the ECONSR value.

If the OAT is between DXLOCK and 68°F (DXLOCK < OAT < 68°F) and additional cooling is required, the economizer will close the to minimum position for three minutes, the economizer integrator will then be reset to 0 and begin modulating to maintain the SASP after the stage has been energized for about 90 seconds. This will allow the economizer to calculate a new ECONSR that takes into account the cooling effect that has just been turned on and not return to the value require before the cooling was added. This will prevent the economizer from causing premature off cycles of compressors while maintaining the low SAT temperature setpoint for the number of stages active. In addition to preventing compressor short cycling, by using return air across the evaporator coil just after the compressor has started allows for increased refrigerant flow rates providing for better oil return of any oil washed out during compressor start-up.

If the OAT > 68°F and OAT < SPT and the number of DX stages requested is > 0 by the staging algorithm, then ECONSR is set to its minimum value 48°F and the damper will go to 100% open.

If the Auxiliary Relay is configured for exhaust fan (AUXOUT = 1) in the CONFIG configuration table and Continuous Power Exhaust (MODPE) is Enable in the SERVICE configuration table, then the AUXO output (HS3) will be energized whenever the PremierLink controller is in the occupied mode. If the MODPE is disabled then AUXO output will be energized based on the Power Exhaust Setpoint (PES) in the SETPOINT table.

Heating

The heat stages are controlled by the Heating Control Loop, which is used to calculate the desired SAT needed to satisfy the space. It will compare the SPT to the Occupied Heat Setpoint (OHSP) + the T56 slider offset (STO) when occupied and the Unoccupied Heat Setpoint (UHSP - Unoccupied Heating Deadband) if unoccupied to calculate a Staged Heat Submaster Reference (SHSR). The heat staging algorithm compares the SHSR to the actual SAT to calculate the required number of heating stages to satisfy the load. This loop runs every 40 seconds. The following conditions must be met in order for this algorithm to run:

- Indoor fan has been ON for at least 30 seconds.
- Cool mode is not active and the time guard between modes equals zero.
- Mode is occupied or the Temperature Compensated Start or Heat mode is active.
- SPT reading is available and < (OHSP + STO).
- If it is unoccupied and the SPT < (UHSP - Unoccupied Heating Deadband). The indoor fan will be turn on by the staging algorithm.

When all of the above conditions are met, the SHSR is calculated and up to 3 stages of heat will turned on and off to satisfy to maintain the SAT = SHSR. If any of the above conditions are not met, the SHSR is set to its minimum value of 35°F.

The Staged Heat Submaster Reference (SHSR) is calculated as follows:

SHSR = Heating PID function on (error) where error = (OHSP + STO) - Space Temperature

The Maximum SHSR is determined by the SATHI configuration. If the supply-air temperature exceeds the SATHI configuration value, then the heat stages will turn off. Heat staging will resume after a delay to allow the supply-air temperature to drop below the SATHI value.

The maximum number of stages available is dependent on the type of heat and the number of stages programmed in the CONFIG and SERVICE configuration tables. Staging will occur as follows for gas electric units, Carrier heat pumps with a defrost board, or cooling units with electric heat:

- For Heating PID STAGES = 2
  HEAT STAGES = 1 (50% capacity) - energize HS1.
  HEAT STAGES = 2 (100% capacity) - energize HS2.
- For Heating PID STAGES = 3 and AUXOUT = HS3
  HEAT STAGES = 1 (33% capacity if) - energize HS1
  HEAT STAGES = 2 (66% capacity) - energize HS2
  HEAT STAGES = 3 (100% capacity) - energize HS3

Staging will occur as follows For heat pump units with AUXOUT configured as reversing valve:

- Heating PID STAGES = 2 and AUXOUT = Reversing Valve Heat (the H3_EX_RV output will stay energized until there is a cool demand) HEAT STAGES = 1 (50% capacity) shall energize CMP1, CMP2, RVS.

  HEAT STAGES = 2 (100% capacity) shall energize HS1 and HS2.
- Heating PID STAGES = 3 and AUXOUT = Reversing Valve Heat (the H3_EX_RV output will stay energized until there is a cool demand)

  HEAT STAGES = 1 (33% capacity if) shall energize CMP1, CMP2, RVS

  HEAT STAGES = 2 (66% capacity) shall energize HS1

  HEAT STAGES = 3 (100% capacity) shall energize HS2

If AUXOUT is configured for Reversing Valve Cool, then the H3_EX_RV contact will be deenergized when there is a demand for heating. The heat stages will be cycled to temper the SAT so that it will be between the SPT and the SPT + 10°F (SPT < SAT < (SPT + 10°F)) if:

- The number of heat stages calculated is zero
- The OAT < 55°F
- An IAQ sensor is installed
- The IAQ Minimum Damper Position > minimum damper position
- And the SAT < SPT -10°F.

There is also a SAT tempering routine that will act as SAT low limit safety to prevent the SAT from becoming too cold should the economizer fail to close. One stage of heating will be energized if it is not in the Cooling or Free Cooling mode and the OAT is below 55°F and the SAT is below 40°F. It will deenergize when the SAT > (SPT + 10°F).

Indoor Air Quality

If the optional indoor air quality (IAQI) sensor is installed, the PremierLink controller will maintain indoor air quality within the space at the user configured differential setpoint (IAQD) in the CONFIG configuration table. The setpoint is the difference between the IAQI and an optional outdoor air quality sensor (OAQ). If the OAQ is not present then a fixed value of 400 ppm is used. The actual space IAQ setpoint (IAQS) is calculated as follows:

IAQS = IAQD + OAQ (OAQ = 400 ppm if not present)

As air quality within the space changes, the minimum position of the economizer damper will be changed also thus allowing more or less outdoor air into the space depending on the relationship of the IAQI to the IAQS. The IAQ algorithm runs every 30 seconds and calculates IAQ minimum position value using a PID loop on the IAQI deviation from the IAQS. The IAQ minimum position is then compared against the user configured minimum position (MDP) and the greatest value becomes the final minimum damper position (IQMP). If the calculated IAQ minimum position is greater than the IAQ maximum damper position (IAQMAXP) decision in the SERVICE configuration table, then it will be clamped to IAQMAXP value.

If IAQ is configured for low priority, the positioning of the economizer damper can be overridden by comfort requirements. If the SPT > OCSP + 2.5 or the SPT < OHSP - 2.5 then IAQ minimum position becomes 0 and the IQMP = MDP. The IAQ mode will resume when the SPT ≤ OCSP + 1.0 and SPT ≥ OHSP - 1.0.

If IAQ is configured for high priority and the OAT < 55°F and the SAT < (SPT - 10°F), the algorithm will enable the heat stages to maintain the SAT between the SPT and the SPT + 10°F.

IAQ Pre-Occupancy Purge

This function is designed to purge the space of airborne contaminants that may have accumulated 2 hours prior to the beginning of the next occupied period. The maximum damper position that will be used is temperature compensated for cold whether conditions and can be pre-empted by Temperature Compensated Start function. For pre-occupancy to occur, the following conditions must be met:

- IAQ Pre-Occupancy Purge option is enabled in the CONFIG configuration table
- Unit is in the unoccupied state
- Current Time is valid
- Next Occupied Time is valid
- Time is within 2 hours of next Occupied period
- Time is within Purge Duration (user-defined 5 to 60 minutes in the CONFIG configuration table)
- OAT Reading is available

If all of the above conditions are met, the economizer damper IQMP is temporarily overridden by the pre-occupancy damper position (PURGEMP). The PURGEMP will be set to one of the following conditions based on atmospheric conditions and the space temperature:

- If the OAT ≥ NTLO (Unoccupied OAT Lockout Temperature) and OAT < 65°F and OAT is less than or equal to OCSP and Enthalpy = Low then PURGEMP = 100%.
- If the OAT < NTLO then PURGEMP = LTMP (Low Temperature Minimum Position - defaults to 10%)
- If the OAT > 65°F or (OAT ≥ NTLO and OAT > OCSP) or Enthalpy = High then PURGEMP = HTMP (High Temperature Minimum Position defaults to 35%).

The LTMP and HTMP are user adjustable values from 0 to 100% in the SETPOINT table. Whenever PURGEMP results in a number greater than 0%, the IAQ pre-occupancy purge mode will be enabled turning on the Indoor Fan Relay and setting the economizer IQMP to the PURGEMP value. When IAQ pre-occupancy mode is not active PURGEMP = 0%.

Unoccupied Free Cooling

Unoccupied free cool function will start the indoor fan during unoccupied times in order to cool the space with outside air. This function is performed to delay the need for mechanical cooling when the system enters the occupied period. Depending on how Unoccupied Free Cooling is configured, unoccupied mode can occur at any time in the unoccupied time period or 2 to 6 hours prior to the next occupied time. Once the space has been sufficiently cooled during this cycle, the fan will be stopped. In order to perform unoccupied free cooling all of the following conditions must be met:

- NTEN option is enabled in the CONFIG configuration table
- Unit is in unoccupied state
- Current time of day is valid

- Temperature Compensated Start mode is not active
- COOL mode is not active
- HEAT mode is not active
- SPT reading is available
- OAT reading is available
- Enthalpy is low
- OAT > NTLO (with 1°F hysteresis) and < Max Free Cool setpoint

If any of the above conditions are not met, Unoccupied Free Cool mode will be stopped, otherwise, the mode will be controlled as follows:

- The NTFC setpoint (NTSP) is determined as NTSP = (OCSP + OHSP) / 2
- The Unoccupied Free Cool mode will be started when:
  SPT > (NTSP + 2°F) and SPT > (OAT + 8°F)
- The Unoccupied Free Cool mode will be stopped when:
  SPT < NTSP or SPT < (OAT + 3°F)

Temperature Compensated Start

This function will run when the controller is in unoccupied state and will calculate early start bias time (SBT) based on space temperature deviation from occupied setpoints in minutes per degree. The following conditions will be met for the function to run:

- Unit is in unoccupied state
- Next occupied time is valid
- Current time of day is valid
- Valid space temperature reading is available (from sensor or linkage thermostat)
- Cool Start Bias (KCOOL) and Heat Bias Start (KHEAT) > 0 in the CONFIG configuration table

The SBT is calculated by one of the following formulas depending on temperature demand:

If SPT > OCSP then SBT = (SPT - OCSP) * KCOOL

If SPT < OHSP then SPT = (OHSP - SPT) * KHEAT.

The calculated start bias time can range from 0 to 255 minutes. When SBT is greater than 0 the function will subtract the SBT from the next occupied time to calculate a new start time. When a new start time is reached, the Temperature Compensated Start mode is started. This mode energizes the fan and the unit will operate as though it is in occupied state. Once set, Temperature Compensated Start mode will stay on until the unit returns to occupied state. If either Unoccupied Free Cool or IAQ Pre-Occupancy mode is active when Temperature Compensated Start begins, their mode will end.

Door Switch

The Door Switch function is designed to disable mechanical heating and cooling outputs when the REMOCC contact input is closed (in the ON state) after a programmed time delay. The fan will continue to operate based on the current mode and the ASHRAE 90.1 Supply Fan setting. The delay is programmable from 2 to 20 minutes by setting the Remote Cont/Door Switch decision in the SERVICE table to a value equal to the number of minutes desired. When the contact is open (in the OFF state), the PremierLink™ controller will resume normal temperature control.

This application is designed for use in schools or other public places where a door switch can be installed to monitor the opening of a door for an extended period of time. The controller will disable mechanical cooling and heating when the door is open for a programmed amount of time.

This function can also be used to monitor a high condensate level switch when installed on a water source heat pump to disable mechanic cooling in case of a plugged evaporator condensate pan drain.

Linkage

The Linkage function in the PremierLink controller is available for applications using a Linkage thermostat or the 3V control system. If using the Linkage thermostat, both the PremierLink controller and the stat must be on the same CCN bus. When used as the air source for a 3V control system, the PremierLink controller is not required to be on the same CCN bus but it is recommended. Linkage will be active when it is initiated from the Linkage thermostat or the 3V Linkage Coordinator through CCN communications and requires no configuration. Only one device can be linked to the PremierLink controller.

Once Linkage is active, the PremierLink controller's own SPT, temperature setpoints, and occupancy are ignored and the controller will use the information provided by the remote linkage device. The following information will be received from the remote linked device and can be viewed in the maintenance display table:

- Supervisory Element
- Supervisory Bus
- Supervisory Block
- Average Occupied Heat Setpoint
- Average Occupied Cool Setpoint
- Average Unoccupied Heat Setpoint
- Average Unoccupied Cool Setpoint
- Average Zone Temp
- Average Occupied Zone Temp
- Occupancy Status

In return, the PremierLink™ controller will provide its SAT and operating mode to the linked device.

It will convert its operating modes to Linkage modes. (See Table 31.)

Table 31 – Linkage Modes

ROOFTOP MODE	VALUE	LINKAGE MODE
Demand Limit	N/A	N/A
Heat	3	Heating
Cool or Free Cooling	4	Cooling
IAQ Control	N/A	N/A
Temp. Compensated Start Heat	2	Warm–up
Temp. Compensated Start Cool	4	Cooling
IAQ Purge	6	Pressurization
Occupied (Indoor Fan ON)	4	Cooling
Unoccupied Free Cool	5	Unoccupied Free Cooling
Fire Shutdown	7	Evac
Factory/Field Test	1	Off
Off	1	Off

The PremierLink controller will generate a Linkage Communication Failure alarm if a failure occurs for 5 consecutive minutes once a Linkage has previously been established. It will then revert back to its own SPT, setpoints and occupancy schedule for control. For this reason, Carrier strongly recommends that an SPT be installed in the space on open plenum systems or in the return air duct of ducted return air systems to provide continued backup operation. When Linkage communication is restored, the controller will generate a return to normal.

For more information on how the PremierLink controller is used in conjunction with the Carrier 3V control system, contact your CCN controls representative.

IMPORTANT: The PremierLink controller should not be used as a linked air source in a ComfortID™ VAV system. The ComfortID VAV system will NOT function correctly when applied with a PremierLink controller as the air source, resulting in poor comfort control and possible equipment malfunction.

NOTE: The PremierLink controller can be used as an air source in a 3V Pressure Independent (PI) System (a 3V Linkage Coordinator with ComfortID PI Zone Controllers), but it should not be used as an air source with ComfortID controllers unless a 3V zone controller is used as the Linkage Coordinator. Contact your Carrier CCN controls representative for assistance.

Demand Limit

If the demand limit option is enabled, the control will receive and accept Redline Alert and Loadshed commands from the CCN loadshed controller. When a redline alert is received, the control will set the maximum stage of capacity equal to the stage of capacity that the unit is operating at when the redline alert was initiated.

When loadshed command is received the control will reduce capacity as shown in Table 32.

Table 32 – Loadshed Command — Gas and Electric Heat Units

CURRENT CAPACITY	NEW CAPACITY
CMP1	DX Cooling OFF
CMP1+CMP2	CMP1
HS1	Heat OFF
HS1+HS2 (+HS3)	HS1

The controller will have a maximum demand limit timer of 1 hour that prevents the unit from staying in load shed or redline alert longer than 1 hour in the event the controller loses communication with the network load shed module. Should the maximum demand limit timer expire prior to receiving the loadshed device command from CCN, the control will stop demand limit mode and return to normal operation.

RTU-MP Sequence of Operation

The RTU-MP will control the compressor, economizer and heating outputs based on its own space temperature input and setpoints. An optional CO_2 IAQ sensor mounted in the space can influence the economizer minimum position. The RTU-MP has its own hardware clock that is set automatically when the software is installed on the board. The RTU-MP's default is to control to occupied setpoints all the time, until a type of occupancy control is set. Occupancy types are described in the scheduling section. The following sections describe the operation for the functions of the RTU-MP. All point objects that are referred to in this sequence will be in reference to the objects as viewed in BACview[6] Handheld.

Scheduling

Scheduling is used to start heating or cooling (become occupied) based upon a day of week and a time period and control to the occupied heating or cooling setpoints. Scheduling functions are located under occupancy determination and the schedule menu accessed by the Menu softkey (see Appendix - for menu structure). Your local time and date should be set for these functions to operate properly. Five scheduling functions are available by changing the Occupancy Source to one of the following selections:

Always Occupied (Default Occupancy)

The unit will run continuously. RTU-MP ships from the factory with this setting.

Local Schedule

The unit will operate according to the schedule configured and stored in the unit. The local schedule is made up of three hierarchy levels that consist of two Override schedules, twelve Holiday and four Daily schedules, and are only accessible by the BACview screen (handheld or virtual).

The Daily schedule is the lowest schedule in the hierarchy and is overridden by both the Holiday and Override schedule. It consists of a start time, a stop time (both in 24 hour mode) and the seven days of the week, starting with Monday and ending in Sunday. To select a daily schedule scroll to the Schedules menu off of the Menu selection. Enter the User password and change the Occupancy Source to Local Schedule. Scroll down and over to the Daily menu and press enter. Choose one of the four Daily schedules by pressing the Next softkey and change the Use? point from NO to YES by selecting the point and pressing the INCR or DECR softkey. Press the OK softkey and scroll to the start and stop times. Edit these times following the same steps as the Use? point. Finally scroll down to the Days: section and highlight the days required for the Daily schedule by INCR or DECR softkeys and press OK softkey.

The Holiday schedule is created to override the Daily schedule and identify a specific day and month of the year to start and stop the unit and change control to the unoccupied heating and cooling setpoints. Follow the same steps to turn on one of the twelve Holiday schedules and start and stop times. Next, select one out of the twelve months and one out of the thirty-one days of that month. The RTU-MP will now ignore the Daily schedule for the specific day and time you selected and follow the Holiday Schedule for this period.

The Override schedules primary purpose is to provide a temporary change in the occupied heating and cooling setpoints and force the unit to control to the unoccupied heating and cooling setpoints. This would occur on a set day in a particular month and last during the start and stop time configured. The Override schedule is enabled by following the same steps to create the Holiday schedule.

NOTE: Push button override is only available when running a local or BACnet Schedule.

BACnet Schedule

For use with a Building Automation System that supports native BACnet scheduling is scheduling the unit. With the Occupancy Source set to BACnet schedule the BAS will control the unit through network communication and it's own scheduling function.

BAS On/Off

The Building Automation System is scheduling the unit via an On/Off command to the BAS ON/OFF software point. The Building Automation System can be speaking BACnet, Modbus, or N2 and is writing to the BAS On/Off point in the open protocol point map.

NOTE: If the BAS supports NATIVE BACnet scheduling, then set the Occupancy Source to BACnet schedule. If the BAS is BACnet but does NOT support NATIVE BACnet scheduling, then set the Occupancy Source to BAS On/Off.

DI On/Off

A hard-wired input on the RTU-MP will command the unit to start/stop. Inputs 3, 5, 8, and 9 on plug J5 can be hard-wired to command the unit to start/stop.

NOTE: Scheduling can either be controlled via the unit or the BAS, but NOT both.

Indoor Fan

The indoor fan will be turned on whenever any one of the following conditions is true:

- It is in the occupied mode. This will be determined by its own internal occupancy schedule.
- Whenever there is a demand for cooling or heating in the unoccupied mode.
- Whenever the remote occupancy switch is closed during DI On/Off schedule type or if occupancy is forced occupied by the BAS during BAS On/Off schedule type.

When transitioning from unoccupied to occupied, there will be a configured time delay of 5 to 600 seconds before starting the fan. The fan will continue to run as long as compressors, heating stages, or the dehumidification relays are on when transitioning from occupied to unoccupied with the exception of Shutdown mode. If Fire Shutdown, safety chain, SAT alarm or SPT alarm are active; the fan will be shutdown immediately regardless of the occupancy state or demand.

The RTU-MP has an optional Supply Fan Status input to provide proof of airflow. If this is enabled, the point will look for a contact closure whenever the Supply Fan Relay is on. If it is not enabled then it will always be the same state as the Supply Fan Relay. The cooling, economizer, heating, dehumidification, CO_2 and power exhaust routines will use this input point for fan status.

Cooling

The compressor outputs are controlled by the Cooling Control PID Loop and Cooling Stages Capacity algorithm. They will be used to calculate the desired number of stages needed to satisfy the space by comparing the Space Temperature (SPT) to the Occupied Cool Setpoint plus the T56 slider offset when occupied and the Unoccupied Cool Setpoint (UCSP) plus the T56 slider offset, if unoccupied. The economizer, if available, will be used for cooling in addition to the compressors. The following conditions must be true in order for this algorithm to run:

- Indoor Fan has been ON for at least 30 seconds.
- Heat mode is not active and the time guard between modes equals zero.
- If occupied and the SPT > (occupied cool setpoint plus the T56 slider offset).
- Space Temperature reading is available.
- If it is unoccupied and the SPT > (unoccupied cool setpoint plus the T56 slider offset). The indoor fan will be turned on by the staging algorithm.

- If economizer is available and active and economizer open > 85% and SAT > (SAT low limit + 5°F) and SPT > effective setpoint + 0.5°F.

  OR

  Economizer is available, but not active

  OR

  Economizer is not available
- OAT > DX Lockout temperature.

If all of the above conditions are met, the compressors will be energized as required, otherwise they will be de-energized.

There is a fixed 3-minute minimum on time and a 5-minute off time for each compressor output and a 3-minute minimum time delay between staging up or down.

Any time the compressors are running the RTU-MP will stage down the compressors if the SAT becomes less than the cooling low supply air setpoint.

After a compressor is staged off, it may be started again after a normal time-guard period and the supply air temperature has increased above the low supply air setpoint.

Economizer

The Economizer dampers are used to provide free cooling and Indoor Air Quality, if optional CO_2 sensor is installed, when the outside conditions are suitable.

The following conditions must be true for economizer operation:

- Indoor Fan has been on for at least 30 seconds.
- Enthalpy is Low if the Enthalpy input is enabled.
- SAT reading is available.
- OAT reading is available.
- SPT reading is available.
- OAT <= High OAT economizer lockout configuration (default = 75).
- OAT <= SPT

If any of the mentioned conditions are not true, the economizer will be set to its configured minimum position. The minimum damper position can be overridden by the IAQ routine described later in this section.

If the above conditions are true, the Economizer Control Master Loop will calculate a damper position value based on the following calculation:
Damper Position = minimum position + PID (SPT - econ setpoint). Econ setpoint is half way between the effective cool and heat setpoints. If the SAT drops below the cooling low supply air setpoint (+ 5°F), the economizer will ramp down to minimum position.

Power Exhaust

If RTU-MP is also controlling an exhaust fan, it can be enabled based on damper position or by occupancy. If configured for continuous occupied operation, it will be energized whenever the controller is in the occupied mode and disabled when in the unoccupied mode. If configured for damper position control, it will be energized whenever the economizer exceeds the power exhaust setpoint and disabled when the economizer drops below the setpoint by a fixed hysteresis of 10%.

Heating

The heating outputs are controlled by the Heating Control PID Loop and Heating Stages Capacity algorithm. They will be used to calculate the desired number of stages needed to satisfy the space by comparing the SPT to the Occupied Heat Setpoint plus the T56 slider offset when occupied and the Unoccupied Heat Setpoint plus the T56 slider offset if unoccupied. The following conditions must be true in order for this algorithm to run:

- Indoor Fan has been ON for at least 30 seconds.
- Cool mode is not active and the time guard between modes equals zero.
- If occupied and SPT < (occupied heat setpoint plus T56 slider offset)
- SPT reading is available
- If it is unoccupied and the SPT < (unoccupied heat setpoint plus T56 slider offset). The indoor fan will be turned on by the staging algorithm.
- OAT < High OAT lockout temperature.

If all of the above conditions are met, the heating outputs will be energized as required, otherwise they will be de-energized. If the SAT begins to exceed the high supply air setpoint, a ramping function will cause the Heat Stages Capacity algorithm to decrease the number of stages until the SAT has dropped below the setpoint.

There is a fixed one minute minimum on time and a one minute off time for each heat output. Heat staging has a 3 minute stage up and 30 second stage down delay.

Indoor Air Quality

If the optional indoor air quality sensor is installed, the RTU-MP will maintain indoor air quality within the space at the user configured differential setpoint. The setpoint is the difference between the indoor air quality and an optional outdoor air quality sensor. If the outdoor air quality is not present then a fixed value of 400ppm is used. The following conditions must be true in order for this algorithm to run:

- The mode is occupied.
- Indoor Fan has been ON for at least 30 seconds.
- Indoor Air Quality sensor has a valid reading

As air quality within the space changes, the minimum position of the economizer damper will be changed thus allowing more or less outdoor air into the space depending on the relationship of the indoor air quality to the differential setpoint. If all the above conditions are true, the IAQ algorithm will run and calculates an IAQ minimum position value using a PID loop. The IAQ minimum damper position is then compared against the user configured economizer minimum position and the greatest value becomes the final minimum damper position of the economizer output.

If the calculated IAQ minimum position is greater than the IAQ maximum damper position configuration then it will be clamped to the configured value.

Demand Limit

If the RTU-MP receives a level 1 (one degree offset), 2 (two degree offset), or a 3 (4 degree offset) to the BACnet demand limit variable, the controller will expand the heating and cooling setpoints by the configured demand limit setpoint value and remain in effect until the BACnet demand limit variable receives a 0 value.

FASTENER TORQUE VALUES

See Table 33 for torque values.

Table 33 – Torque Values

Supply fan motor mounting	120 ± 12 in–lbs	13.5 ± 1.4 Nm
Supply fan motor adjustment plate	120 ± 12 in–lbs	13.5 ± 1.4 Nm
Motor pulley setscrew	72 ± 5 in–lbs	8.1 ± 0.6 Nm
Fan pulley setscrew	72 ± 5 in–lbs	8.1 ± 0.6 Nm
Blower wheel hub setscrew	192 ± 12 in–lbs	2.2 ± 1.3 Nm
Bearing locking collar setscrew	65 to70 in–lbs	7.3 to 7.9 Nm
Compressor mounting bolts	65 to75 in–lbs	7.3 to 7.9 Nm
Condenser fan motor mounting bolts	20 ± 2 in–lbs	2.3 ± 0.2 Nm
Condenser fan hub setscrew	84 ± 12 in–lbs	9.5 ± 1.4 Nm

APPENDIX I. MODEL NUMBER SIGNIFICANCE

Model Number Nomenclature

1	2	3	4	5	6	7	8	9	10	11	12	13	14	15	16	17	18
4	8	T	C	D	D	2	4	A	1	G	6	–	0	A	0	A	0

Unit Heat Type
48 = Gas Heat Pkg. Rooftop

Tier / Model
TC = High Efficiency

Heat Size
D = Low Gas Heat
E = Medium Gas Heat
F = High Gas Heat
S = Low Stainless Gas Heat
R = Medium Stainless Gas Heat
T = High Stainless Gas Heat

Refrig. System Options
D = 2–stg. Cooling w/Novation™ Condenser Coil

Cooling Tons
17 = 15 Ton
20 = 17.5 Ton
24 = 20 Ton
28 = 25 Ton

Sensor Options
A = None
B = RA Smoke Detector
C = SA Smoke Detector
D = RA + SA Smoke Detector
E = CO_2
F = RA Smoke Detector and CO_2
G = SA Smoke Detector and CO_2
H = RA & SA Smoke Detector and CO_2

Indoor Fan Options
1 = Standard Static Option, Vertical
2 = Medium Static Option, Vertical
3 = High Static Option, Vertical
5 = Standard Static Option, Horizontal
6 = Medium Static Option, Horizontal
7 = High Static Option, Horizontal

Coil Options (Indoor Coil / Outdoor Coil)
G = Al/Al – Al/Cu
H = Al/Al – Cu/Cu
J = Al/Al – E–coat Al/Cu
K = Al/Al E–coat – Al/Cu
L = Al/Al E–coat – Al/Cu E–coat
T = Al/Al – Al/Cu, Louvered
U = Al/Al – Cu/Cu,– Louvered
V = Al/Al – E–coat Al/Cu, Louvered
W = Al/Al E–coat – Al/Cu, Louvered
X = Al/Al E–coat – Al/Cu E–coat, Louvered

Voltage
1 = 575/3/60
5 = 208–230/3/60
6 = 460/3/60

Design Rev
– = Factory assigned

Base Unit Controls
0 = Electromechanical
1 = PremierLink Controller
2 = RTU–MP Multi Protocol Controller

Intake / Exhaust Options
A = None
B = Temp Economizer w/ Barometric Relief
D = Temperature Economizer w/PE
F = Enthalpy Economizer w/ Baro Relief
H = Enthalpy Economizer w/PE
K = 2–Position Damper
P = Manual Outdoor Air Damper

Service Options
0 = None
1 = Unpowered Convenience Outlet
2 = Powered Convenience Outlet

Electrical Options
A = None
C = Non–Fused Disconnect
D = Thru The Base Connections
F = Non–Fused Disc Thru The Base

Brand / Packaging
0 = Standard

Serial Number Format

POSITION NUMBER	1	2	3	4	5	6	7	8	9	10
TYPICAL	4	8	0	8	G	1	2	3	4	5

POSITION	DESIGNATES
1–2	Week of manufacture (fiscal calendar)
3–4	Year of manufacture (“08” = 2008)
5	Manufacturing location (G = ETP, Texas, USA)
6–10	Sequential number

APPENDIX II. PHYSICAL DATA

Physical Data **(Cooling)** **15 - 25 TONS**

	48TC*17	48TC*20	48TC*24	48TC*28
Refrigeration System				
# Circuits / # Comp. / Type	2 / 2 / Scroll	2 / 2 / Scroll	2 / 2 / Scroll	2 / 2 / Scroll
R−410a charge A/B (lbs)	9.5/12.0	9.5/12.0	14.4/12.5	12.1/12.4
Metering device	Acutrol	Acutrol	Acutrol	Acutrol
High−press. Trip / Reset (psig)	630 / 505	630 / 505	630 / 505	630 / 505
Low−press. Trip / Reset (psig)	54 / 117	54 / 117	54 / 117	54 / 117
Evap. Coil				
Material	Cu / Al	Cu / Al	Cu / Al	Cu / Al
Tube Diameter	3/8”	3/8”	3/8”	3/8”
Rows / FPI	4 / 15	4 / 15	4 / 15	4 / 15
Total face area (ft2)	19.56	19.56	22.00	23.11
Condensate drain conn. size	3/4”	3/4”	3/4”	3/4”
Evap. fan and motor				
VERTICAL				
Standard Static				
Motor Qty / Drive type	1 / Belt	1 / Belt	1 / Belt	1 / Belt
Max BHP	2.2	3.3	4.9	4.9
RPM range	518−713	604−819	676−819	767−958
Motor frame size	56	56	56	56
Fan Qty / Type	2 / Centrifugal	2 / Centrifugal	2 / Centrifugal	2 / Centrifugal
Fan Diameter (in)	15 x 15	15 x 15	15 x 15	15 x 15
Medium Static				
Motor Qty / Drive type	1 / Belt	1 / Belt	1 / Belt	1 / Belt
Max BHP	3.3	4.9	6.5	6.5
RPM range	700−876	767−958	814−1008	916−1134
Motor frame size	56	56	184T	184T
Fan Qty / Type	2 / Centrifugal	2 / Centrifugal	2 / Centrifugal	2 / Centrifugal
Fan Diameter (in)	15 x 15	15 x 15	15 x 15	15 x 15
High Static				
Motor Qty / Drive type	1 / Belt	1 / Belt	1 / Belt	1 / Belt
Max BHP	4.9	6.5	8.7	8.7
RPM range	836−1049	846−1061	965−1170	1080−1290
Motor frame size	56	184T	213T	213T
Fan Qty / Type	2 / Centrifugal	2 / Centrifugal	2 / Centrifugal	2 / Centrifugal
Fan Diameter (in)	15 x 15	15 x 15	15 x 15	15 x 15
HORIZONTAL				
Standard Static				
Motor Qty / Drive type	1 / Belt	1 / Belt	1 / Belt	1 / Belt
Max BHP	2.2	3.3	4.9	4.9
RPM range	518−713	604−819	676−819	676−819
Motor frame size	56	56	56	56
Fan Qty / Type	2 / Centrifugal	2 / Centrifugal	2 / Centrifugal	2 / Centrifugal
Fan Diameter (in)	18 x 15 & 15 X 11	18 x 15 & 15 X 11	18 x 15 & 15 X 11	18 x 15 & 15 X 11
Medium Static				
Motor Qty / Drive type	1 / Belt	1 / Belt	1 / Belt	1 / Belt
Max BHP	3.3	4.9	6.5	6.5
RPM range	700−876	767−958	814−1008	814−1009
Motor frame size	56	56	184T	184T
Fan Qty / Type	2 / Centrifugal	2 / Centrifugal	2 / Centrifugal	2 / Centrifugal
Fan Diameter (in)	18 x 15 & 15 X 11	18 x 15 & 15 X 11	18 x 15 & 15 X 11	18 x 15 & 15 X 11
High Static				
Motor Qty / Drive type	1 / Belt	1 / Belt	1 / Belt	1 / Belt
Max BHP	4.9	6.5	8.7	8.7
RPM range	836−1049	846−1061	965−1170	965−1171
Motor frame size	56	184T	213T	213T
Fan Qty / Type	2 / Centrifugal	2 / Centrifugal	2 / Centrifugal	2 / Centrifugal
Fan Diameter (in)	18 x 15 & 15 X 11	18 x 15 & 15 X 11	18 x 15 & 15 X 11	18 x 15 & 15 X 11
Cond. Coil (Circuit A)				
Coil type	Novation	Novation	Novation	Novation
Coil Length (in)	70	70	82	75
Coil Height (in)	44	44	44	52
Number of Passes	2	2	2	2
Total face area (ft2)	21.4	21.4	25.1	27.1

	48TC*17	48TC*20	48TC*24	48TC*28
Cond. Coil (Circuit B)				
Coil type	Novation	Novation	Novation	Novation
Coil Length (in)	70	70	57	75
Coil Height (in)	44	44	44	52
Rows / FPI	2	2	2	2
Total face area (ft2)	21.4	21.4	17.4	27.1
Cond. fan / motor				
Qty / Motor drive type	3 / direct	3 / direct	4 / direct	4 / direct
Motor HP / RPM	1/4 / 1100	1/4 / 1100	1/4 / 1100	1/4 / 1100
Fan diameter (in)	22	22	22	22
Filters				
RA Filter # / size (in)	6 / 20 x 25 x 2	6 / 20 x 25 x 2	6 / 20 x 25 x 2	9 / 16 x 25 x 2
OA inlet screen # / size (in)	4 / 16 x 25 x 1	4 / 16 x 25 x 1	4 / 16 x 25 x 1	4 / 16 x 25 x 1

	48TC*D17	48TC*D20	48TC*D24	48TC*D28
Gas Connection				
# of Gas Valves	1	1	1	1
Nat. gas supply line press (in. w.g.)/(PSIG)	5 – 13 / 0.18 – 0.47	5 – 13 / 0.18 – 0.47	5 – 13 / 0.18 – 0.47	5 – 13 / 0.18 – 0.47
Propane supply line press (in. w.g.)/(PSIG)	11 – 13 / 0.40 – 0.47	11 – 13 / 0.40 – 0.47	11 – 13 / 0.40 – 0.47	11 – 13 / 0.40 – 0.47
Heat Anticipator Setting (Amps)				
1st stage	0.14	0.14	0.14	0.14
2nd stage	0.14	0.14	0.14	0.14
Natural Gas Heat				
LOW # of stages / # of burners (total)	2 / 5	2 / 5	2 / 5	2 / 5
LOW Connection size	3/4” NPT	3/4” NPT	3/4” NPT	3/4” NPT
LOW Rollout switch opens / closes	195 / 115	195 / 115	195 / 115	195 / 115
LOW Temperature rise range (F)	25 – 55	25 – 55	25 – 55	25 – 55
MED # of stages / # of burners (total)	2 / 7	2 / 7	2 / 7	2 / 7
MED Connection size	3/4” NPT	3/4” NPT	3/4” NPT	3/4” NPT
MED Rollout switch opens / closes	195 / 115	195 / 115	195 / 115	195 / 115
MED Temperature rise range (F)	30 – 60	30 – 60	30 – 60	30 – 60
HIGH Connection size	2 / 10	2 / 10	2 / 10	2 / 10
HIGH # of stages / # of burners (total)	3/4” NPT	3/4” NPT	3/4” NPT	3/4” NPT
HIGH Rollout switch opens / closes	195 / 115	195 / 115	195 / 115	195 / 115
HIGH Temperature rise range (F)	35 – 65	35 – 65	35 – 65	35 – 65
Liquid Propane Heat				
LOW # of stages / # of burners (total)	2 / 5	2 / 5	2 / 5	2 / 5
LOW Connection size	3/4” NPT	3/4” NPT	3/4” NPT	3/4” NPT
LOW Rollout switch opens / closes	195 / 115	195 / 115	195 / 115	195 / 115
LOW Temperature rise range (F)	25 – 55	25 – 55	25 – 55	25 – 55
MED # of stages / # of burners (total)	2 / 7	2 / 7	2 / 7	2 / 7
MED Connection size	3/4” NPT	3/4” NPT	3/4” NPT	3/4” NPT
MED Rollout switch opens / closes	195 / 115	196 / 115	197 / 115	198 / 115
MED Temperature rise range (F)	30 – 60	30 – 60	30 – 60	30 – 60
HIGH # of stages / # of burners (total)	2 / 10	2 / 10	2 / 10	2 / 10
HIGH Connection size	3/4” NPT	3/4” NPT	3/4” NPT	3/4” NPT
HIGH Rollout switch opens / closes	195 / 115	195 / 115	195 / 115	195 / 115
HIGH Temperature rise range (F)	35 – 65	35 – 65	35 – 65	35 – 65

APPENDIX III. FAN PERFORMANCE

48TC*D17 **15 TON VERTICAL SUPPLY / RETURN**

CFM	AVAILABLE EXTERNAL STATIC PRESSURE (IN. WG)									
	0.2		0.4		0.6		0.8		1.0	
	RPM	BHP	RPM	BHP	RPM	BHP	RPM	BHP	RPM	BHP
3900	453	0.57	546	0.86	630	1.18	705	1.54	**776**	**1.92**
4400	482	0.71	568	1.02	647	1.36	720	1.73	**787**	**2.13**
4800	518	0.88	592	1.20	667	1.56	**736**	**1.95**	**801**	**2.36**
5300	541	1.08	618	1.42	688	1.79	**754**	**2.19**	**817**	**2.62**
5700	572	1.31	644	1.67	**711**	**2.06**	**775**	**2.48**	**834**	**2.92**
6100	604	1.56	672	1.95	**736**	**2.36**	**796**	**2.79**	**853**	**3.25**
6600	646	1.86	**700**	**2.26**	**761**	**2.69**	**819**	**3.14**	874	3.62
7000	668	2.19	**729**	**2.61**	**787**	**3.06**	843	3.53	896	4.03
7400	701	2.56	**759**	**3.01**	815	3.47	868	3.96	919	4.48

CFM	AVAILABLE EXTERNAL STATIC PRESSURE (IN. WG)									
	1.2		1.4		1.6		1.8		2.0	
	RPM	BHP	RPM	BHP	RPM	BHP	RPM	BHP	RPM	BHP
3900	**842**	**2.34**	904	2.79	962	3.27	1019	3.77	1072	4.29
4400	**851**	**2.56**	911	3.02	968	3.50	1023	4.01	1075	4.54
4800	**862**	**2.80**	921	3.27	976	3.77	1029	4.29	1081	4.83
5300	**876**	**3.08**	932	3.56	986	4.07	1038	4.60	– – – –	– – – –
5700	891	3.39	946	3.89	998	4.41	1048	4.90	– – – –	– – – –
6100	908	3.74	961	4.25	1012	4.78	– – – –	– – – –	– – – –	– – – –
6600	927	4.12	978	4.65	– – – –	– – – –	– – – –	– – – –	– – – –	– – – –
7000	947	4.55	– – – –	– – – –	– – – –	– – – –	– – – –	– – – –	– – – –	– – – –
7400	968	4.90	– – – –	– – – –	– – – –	– – – –	– – – –	– – – –	– – – –	– – – –

White background with black font – Field–supplied drive
Light shading – Standard static motor and drive
– – – – Outside operating range
Bold font – Medium static motor and drive
Med shade – High static motor and drive

48TC*D20 **17.5 TON VERTICAL SUPPLY / RETURN**

CFM	AVAILABLE EXTERNAL STATIC PRESSURE (IN. WG)									
	0.2		0.4		0.6		0.8		1.0	
	RPM	BHP	RPM	BHP	RPM	BHP	RPM	BHP	RPM	BHP
3900	453	0.57	546	0.86	630	1.18	705	1.54	776	1.92
4400	482	0.71	568	1.02	647	1.36	720	1.73	787	2.13
4800	511	0.88	592	1.20	667	1.56	736	1.95	801	2.36
5300	541	1.08	618	1.42	688	1.79	754	2.19	817	2.62
5700	572	1.31	644	1.67	711	2.06	775	2.48	**834**	**2.92**
6100	604	1.56	672	1.95	736	2.36	796	2.79	**853**	**3.25**
6600	636	1.86	700	2.26	761	2.69	819	3.14	**874**	**3.62**
7000	668	2.19	729	2.61	787	3.06	**843**	**3.53**	896	4.03
7400	701	2.56	759	3.01	**815**	**3.47**	**868**	**3.96**	919	4.48
7900	734	2.97	**790**	**3.44**	**843**	**3.93**	**894**	**4.44**	943	4.97
8300	**768**	**3.43**	**820**	**3.92**	**871**	**4.43**	920	4.96	968	5.51
8700	**801**	**3.94**	**852**	**4.45**	900	4.97	947	5.52	993	6.09

CFM	AVAILABLE EXTERNAL STATIC PRESSURE (IN. WG)									
	1.2		1.4		1.6		1.8		2.0	
	RPM	BHP	RPM	BHP	RPM	BHP	RPM	BHP	RPM	BHP
3900	**842**	**2.34**	904	2.79	962	3.27	1019	3.77	1072	4.29
4400	**851**	**2.56**	911	3.02	968	3.50	1023	4.01	1075	4.54
4800	**862**	**2.80**	921	3.27	976	3.77	1029	4.29	1081	4.83
5300	**876**	**3.08**	932	3.56	986	4.07	1038	4.60	1088	5.15
5700	891	3.39	946	3.89	998	4.41	1048	4.95	1097	5.51
6100	908	3.74	961	4.25	1012	4.78	1061	5.33	1108	5.91
6600	927	4.12	978	4.65	1027	5.19	1074	5.76	1120	6.35
7000	947	4.55	996	5.09	1044	5.65	1090	6.23	– – – –	– – – –
7400	968	5.01	1016	5.57	1062	6.15	– – – –	– – – –	– – – –	– – – –
7900	990	5.52	1036	6.10	– – – –	– – – –	– – – –	– – – –	– – – –	– – – –
8300	1013	6.08	– – – –	– – – –	– – – –	– – – –	– – – –	– – – –	– – – –	– – – –
8700	1038	6.68	– – – –	– – – –	– – – –	– – – –	– – – –	– – – –	– – – –	– – – –

White background with black font – Field–supplied drive
Light shading – Standard static motor and drive
– – – – Outside operating range
Bold font – Medium static motor and drive
Med shade – High static motor and drive

FAN PERFORMANCE (cont.)

48TC*D24 **20 TON VERTICAL SUPPLY / RETURN**

CFM	AVAILABLE EXTERNAL STATIC PRESSURE (IN. WG)									
	0.2		0.4		0.6		0.8		1.0	
	RPM	BHP	RPM	BHP	RPM	BHP	RPM	BHP	RPM	BHP
4500	493	0.72	578	0.95	653	1.20	721	1.47	784	1.76
5000	529	0.93	608	1.18	680	1.45	745	1.74	806	2.04
5500	567	1.18	641	1.45	708	1.74	771	2.05	**829**	**2.37**
6000	605	1.48	674	1.77	738	2.08	798	2.41	**854**	**2.74**
6500	644	1.82	709	2.14	770	2.47	**827**	**2.81**	**881**	**3.17**
7000	683	2.22	744	2.56	802	2.91	**857**	**3.28**	**908**	**3.65**
7500	722	2.68	781	3.04	**836**	**3.41**	**888**	**3.80**	**938**	**4.19**
8000	762	3.20	818	3.58	**870**	**3.97**	**920**	**4.38**	**968**	**4.79**
8500	803	3.78	**855**	**4.19**	**905**	**4.60**	**953**	**5.02**	**999**	**5.46**
9000	**843**	**4.43**	**893**	**4.86**	**941**	**5.30**	**987**	**5.74**	1032	6.19
9500	**884**	**5.15**	**932**	**5.61**	**978**	**6.06**	1022	6.50	1065	7.01
10000	**925**	**5.95**	**970**	**6.43**	1015	6.91	1057	7.40	1098	7.89

CFM	AVAILABLE EXTERNAL STATIC PRESSURE (IN. WG)									
	1.2		1.4		1.6		1.8		2.0	
	RPM	BHP	RPM	BHP	RPM	BHP	RPM	BHP	RPM	BHP
4500	**843**	**2.07**	**899**	**2.39**	**952**	**2.72**	**1002**	**3.08**	1050	3.44
5000	**863**	**2.36**	**917**	**2.70**	**968**	**3.05**	1017	3.41	1063	3.79
5500	**884**	**2.70**	**936**	**3.05**	**986**	**3.42**	1034	3.79	1079	4.18
6000	**907**	**3.10**	**958**	**3.46**	**1006**	**3.84**	1052	4.23	1097	4.63
6500	**932**	**3.54**	**981**	**3.92**	1027	4.31	1073	4.72	1116	5.14
7000	**958**	**4.04**	**1005**	**4.43**	1051	4.84	1094	5.27	1137	5.70
7500	**985**	**4.59**	1031	5.01	1075	5.44	1118	5.87	1159	6.32
8000	1014	5.21	1058	5.65	1101	6.09	1142	6.55	1183	7.01
8500	1044	5.90	1087	6.35	1128	6.82	1168	7.29	1207	7.77
9000	1075	6.66	1116	7.13	1156	7.61	1195	8.10	----	----
9500	1106	7.49	1146	7.98	1185	8.48	----	----	----	----
10000	1139	8.40	----	----	----	----	----	----	----	----

48TC*D28 **25 TON VERTICAL SUPPLY / RETURN**

CFM	AVAILABLE EXTERNAL STATIC PRESSURE (IN. WG)									
	0.2		0.4		0.6		0.8		1.0	
	RPM	BHP	RPM	BHP	RPM	BHP	RPM	BHP	RPM	BHP
5600	564	1.04	644	1.31	715	1.61	780	1.93	840	2.26
6500	624	1.47	697	1.78	763	2.11	824	2.45	881	2.81
6900	656	1.74	725	2.07	789	2.41	848	2.77	904	3.14
7500	713	2.19	778	2.53	838	2.90	894	3.28	946	3.68
8100	767	2.72	823	3.09	879	3.48	933	3.88	**983**	**4.30**
8800	811	3.33	868	3.73	922	4.14	**973**	**4.57**	**1022**	**5.01**
9400	860	4.03	914	4.45	**966**	**4.89**	**1014**	**5.34**	**1061**	**5.80**
10000	910	4.83	**961**	**5.28**	**1010**	**5.74**	**1057**	**6.21**	1102	6.70
10600	**960**	**5.72**	**1009**	**6.20**	1085	6.68	1100	7.18	1143	7.69
11200	1010	6.73	1056	7.23	1101	7.74	1144	8.26	1185	8.70
11900	1060	7.85	1105	8.37	----	----	----	----	----	----

CFM	AVAILABLE EXTERNAL STATIC PRESSURE (IN. WG)									
	1.2		1.4		1.6		1.8		2.0	
	RPM	BHP	RPM	BHP	RPM	BHP	RPM	BHP	RPM	BHP
5600	896	2.62	949	3.00	**999**	**3.39**	**1047**	**3.81**	**1092**	**4.24**
6500	935	3.19	**985**	**3.59**	**1034**	**4.00**	**1080**	**4.44**	**1124**	**4.88**
6900	956	3.54	**1005**	**3.95**	**1053**	**4.37**	**1098**	**4.81**	1141	5.27
7500	**996**	**4.10**	**1044**	**4.53**	**1089**	**4.98**	**1133**	**5.45**	1175	5.94
8100	**1031**	**4.74**	**1077**	**5.19**	**1122**	**5.66**	1164	6.14	1205	6.64
8800	**1068**	**5.46**	**1112**	**5.93**	**1155**	**6.42**	1196	6.92	1236	7.44
9400	**1106**	**6.28**	1149	6.77	1190	7.28	1230	7.80	1269	8.33
10000	1145	7.19	1186	7.71	1226	8.23	1265	8.70	----	----
10600	1185	8.21	1225	----	----	----	----	----	----	----
11200	----	----	----	----	----	----	----	----	----	----
11900	----	----	----	----	----	----	----	----	----	----

White background with black font – Field–supplied drive
Light shading – Standard static motor and drive
---- Outside operating range
Bold font – Medium static motor and drive
Med shade – High static motor and drive

CFM	AVAILABLE EXTERNAL STATIC PRESSURE (IN. WG)									
	0.2		0.4		0.6		0.8		1.0	
	RPM	BHP	RPM	BHP	RPM	BHP	RPM	BHP	RPM	BHP
4000	482	0.84	557	1.23	623	1.65	683	2.12	**737**	**2.61**
4500	523	1.09	593	1.51	655	1.96	**712**	**2.46**	**765**	**2.98**
5000	565	1.40	630	1.84	689	2.33	**744**	**2.85**	**795**	**3.30**
5500	608	1.76	669	2.20	**725**	**2.76**	**777**	**3.30**	826	3.89
6000	652	2.19	**709**	**2.70**	**762**	**3.25**	812	3.83	859	4.44
6500	**697**	**2.70**	**751**	**3.24**	801	3.82	848	4.43	893	5.07
7000	**742**	**3.28**	793	3.85	840	4.47	886	5.11	929	5.78
7500	788	3.94	836	4.55	881	5.20	924	5.87	966	6.57
8000	834	4.69	879	5.34	923	6.02	964	6.73	1004	7.46

CFM	AVAILABLE EXTERNAL STATIC PRESSURE (IN. WG)									
	1.2		1.4		1.6		1.8		2.0	
	RPM	BHP	RPM	BHP	RPM	BHP	RPM	BHP	RPM	BHP
4000	787	3.13	836	3.68	878	4.25	919	4.84	– – – –	– – – –
4500	814	3.53	859	4.11	903	4.71	944	4.90	– – – –	– – – –
5000	842	3.98	887	4.59	– – – –	– – – –	– – – –	– – – –	– – – –	– – – –
5500	872	4.50	915	5.14	– – – –	– – – –	– – – –	– – – –	– – – –	– – – –
6000	903	5.08	945	5.75	– – – –	– – – –	– – – –	– – – –	– – – –	– – – –
6500	936	5.74	977	6.43	– – – –	– – – –	– – – –	– – – –	– – – –	– – – –
7000	970	6.48	1010	7.20	– – – –	– – – –	– – – –	– – – –	– – – –	– – – –
7500	1005	7.30	– – – –	– – – –	– – – –	– – – –	– – – –	– – – –	– – – –	– – – –
8000	– – – –	– – – –	– – – –	– – – –	– – – –	– – – –	– – – –	– – – –	– – – –	– – – –

White background with black font – Field–supplied drive
Light shading – Standard static motor and drive
– – – – Outside operating range
Bold font – Medium static motor and drive
Med shade – High static motor and drive

48TC

48TC*D20 17.5 TON HORIZONTAL SUPPLY / RETURN

CFM	AVAILABLE EXTERNAL STATIC PRESSURE (IN. WG)									
	0.2		0.4		0.6		0.8		1.0	
	RPM	BHP	RPM	BHP	RPM	BHP	RPM	BHP	RPM	BHP
4500	523	1.09	593	1.51	655	1.96	712	2.46	765	2.98
5000	565	1.40	630	1.84	689	2.33	744	2.85	**795**	**3.40**
5500	608	1.76	669	2.24	725	2.76	777	3.31	**826**	**3.89**
6000	652	2.19	709	2.70	762	3.25	**812**	**3.83**	**859**	**4.44**
6500	697	2.70	751	3.24	**801**	**3.82**	**848**	**4.43**	893	5.07
7000	742	3.28	**793**	**3.85**	**840**	**4.47**	886	5.11	929	5.78
7500	**788**	**3.94**	**836**	**4.55**	**881**	**5.20**	924	5.87	966	6.57
8000	**834**	**4.69**	879	5.34	923	6.02	964	6.73	1004	7.46
8500	881	5.54	924	6.23	965	6.94	– – – –	– – – –	– – – –	– – – –

CFM	AVAILABLE EXTERNAL STATIC PRESSURE (IN. WG)									
	1.2		1.4		1.6		1.8		2.0	
	RPM	BHP	RPM	BHP	RPM	BHP	RPM	BHP	RPM	BHP
4500	**814**	**3.53**	**859**	**4.11**	**903**	**4.71**	944	5.33	983	5.97
5000	**842**	**3.98**	**887**	**4.59**	929	5.22	969	5.87	1008	6.50
5500	**872**	**4.50**	915	5.14	957	5.79	996	6.47	– – – –	– – – –
6000	**903**	**4.90**	945	5.75	986	6.44	– – – –	– – – –	– – – –	– – – –
6500	936	5.74	977	6.43	– – – –	– – – –	– – – –	– – – –	– – – –	– – – –
7000	970	6.48	– – – –	– – – –	– – – –	– – – –	– – – –	– – – –	– – – –	– – – –
7500	– – – –	– – – –	– – – –	– – – –	– – – –	– – – –	– – – –	– – – –	– – – –	– – – –
8000	– – – –	– – – –	– – – –	– – – –	– – – –	– – – –	– – – –	– – – –	– – – –	– – – –
8500	– – – –	– – – –	– – – –	– – – –	– – – –	– – – –	– – – –	– – – –	– – – –	– – – –

White background with black font – Field–supplied drive
Light shading – Standard static motor and drive
– – – – Outside operating range
Bold font – Medium static motor and drive
Med shade – High static motor and drive

FAN PERFORMANCE (cont.)

48TC*D24 — **20 TON HORIZONTAL SUPPLY / RETURN**

CFM	AVAILABLE EXTERNAL STATIC PRESSURE (IN. WG)									
	0.2		0.4		0.6		0.8		1.0	
	RPM	BHP	RPM	BHP	RPM	BHP	RPM	BHP	RPM	BHP
5000	565	1.40	630	1.84	689	2.33	744	2.85	795	3.40
5500	608	1.76	669	2.24	725	2.76	777	3.31	**826**	**3.89**
6000	652	2.19	709	2.70	762	3.25	812	3.83	**859**	**4.44**
6500	697	2.70	751	3.24	801	3.82	**848**	**4.43**	**893**	**5.07**
7000	742	3.28	793	3.85	**840**	**4.47**	**886**	**5.11**	**929**	**5.78**
7500	788	3.94	**836**	**4.55**	**881**	**5.20**	**924**	**5.87**	**966**	**6.50**
8000	**834**	**4.69**	**879**	**5.34**	**923**	**6.02**	964	6.73	1004	7.46
8500	**881**	**5.54**	**924**	**6.23**	965	6.94	1004	7.68	1042	8.44
9000	**928**	**6.50**	968	7.21	1008	7.96	1045	8.70	– – – –	– – – –

CFM	AVAILABLE EXTERNAL STATIC PRESSURE (IN. WG)									
	1.2		1.4		1.6		1.8		2.0	
	RPM	BHP	RPM	BHP	RPM	BHP	RPM	BHP	RPM	BHP
5000	**842**	**3.98**	**887**	**4.59**	**929**	**5.22**	**969**	**5.87**	1008	6.54
5500	**872**	**4.50**	**915**	**5.14**	**957**	**5.79**	**996**	**6.47**	1034	7.17
6000	**903**	**5.08**	**945**	**5.75**	**986**	**6.44**	1024	7.14	1061	7.87
6500	**936**	**5.74**	**977**	**6.43**	1016	7.15	1053	7.89	1090	8.65
7000	**970**	**6.48**	1010	7.20	1047	7.94	1084	8.71	– – – –	– – – –
7500	1005	7.30	1044	8.05	– – – –	– – – –	– – – –	– – – –	– – – –	– – – –
8000	1042	8.22	– – – –	– – – –	– – – –	– – – –	– – – –	– – – –	– – – –	– – – –
8500	– – – –	– – – –	– – – –	– – – –	– – – –	– – – –	– – – –	– – – –	– – – –	– – – –
9000	– – – –	– – – –	– – – –	– – – –	– – – –	– – – –	– – – –	– – – –	– – – –	– – – –

White background with black font – Field–supplied drive
Light shading – Standard static motor and drive
– – – – Outside operating range
Bold font – Medium static motor and drive
Med shade – High static motor and drive

48TC*D28 — **25 TON HORIZONTAL SUPPLY / RETURN**

CFM	AVAILABLE EXTERNAL STATIC PRESSURE (IN. WG)									
	0.2		0.4		0.6		0.8		1.0	
	RPM	BHP	RPM	BHP	RPM	BHP	RPM	BHP	RPM	BHP
7500	715	3.12	767	3.68	815	4.28	**862**	**4.90**	**906**	**5.58**
8000	751	3.65	800	4.25	**847**	**4.87**	**892**	**5.53**	**934**	**6.21**
8500	786	4.24	**834**	**4.86**	**879**	**5.51**	**922**	**6.19**	963	6.90
9000	822	4.88	**867**	**5.53**	**910**	**6.21**	952	6.91	991	7.64
9500	**856**	**5.57**	**916**	**6.25**	941	6.95	981	7.68	1020	8.44
10000	**890**	**6.33**	932	7.03	973	7.76	1011	8.52	– – – –	– – – –
10500	924	7.14	965	7.87	1004	8.62		– – – –	– – – –	– – – –
11000	958	8.01	997	8.70	– – – –	– – – –	– – – –	– – – –	– – – –	– – – –
11500	991	8.94	1029	9.73	– – – –	– – – –	– – – –	– – – –	– – – –	– – – –

CFM	AVAILABLE EXTERNAL STATIC PRESSURE (IN. WG)									
	1.2		1.4		1.6		1.8		2.0	
	RPM	BHP	RPM	BHP	RPM	BHP	RPM	BHP	RPM	BHP
7500	**948**	**6.27**	988	6.98	1027	7.72	1065	8.49	– – – –	– – – –
8000	975	6.93	1014	7.67	1052	8.43	– – – –	– – – –	– – – –	– – – –
8500	1002	7.64	1041	8.40	– – – –	– – – –	– – – –	– – – –	– – – –	– – – –
9000	1030	8.41	– – – –	– – – –	– – – –	– – – –	– – – –	– – – –	– – – –	– – – –
9500	– – – –	– – – –	– – – –	– – – –	– – – –	– – – –	– – – –	– – – –	– – – –	– – – –
10000	– – – –	– – – –	– – – –	– – – –	– – – –	– – – –	– – – –	– – – –	– – – –	– – – –
10500	– – – –	– – – –	– – – –	– – – –	– – – –	– – – –	– – – –	– – – –	– – – –	– – – –
11000	– – – –	– – – –	– – – –	– – – –	– – – –	– – – –	– – – –	– – – –	– – – –	– – – –
11500	– – – –	– – – –	– – – –	– – – –	– – – –	– – – –	– – – –	– – – –	– – – –	– – – –

White background with black font – Field–supplied drive
Light shading – Standard static motor and drive
– – – – Outside operating range
Bold font – Medium static motor and drive
Med shade – High static motor and drive

Pulley Adjustment

UNIT	Motor/Drive Combo	Motor Pulley turns open										
		0.0	0.5	1.0	1.5	2.0	2.5	3.0	3.5	4.0	4.5	5.0
17	Standard Static	819	798	776	755	733	712	690	669	647	626	604
	Medium Static	958	939	920	901	882	863	843	824	805	786	767
	High Static	1134	1112	1090	1069	1047	1025	1003	981	960	938	916
20	Standard Static	819	798	776	755	733	712	690	669	647	626	604
	Medium Static	958	939	920	901	882	863	843	824	805	786	767
	High Static	1134	1112	1090	1069	1047	1025	1003	981	960	938	916
24	Standard Static	819	798	776	755	733	712	690	669	647	626	604
	Medium Static	1008	989	969	950	930	911	892	872	853	833	814
	High Static	1170	1150	1129	1109	1088	1068	1047	1027	1006	986	965
28	Standard Static	819	805	790	776	762	748	733	719	705	690	676
	Medium Static	1134	1112	1090	1069	1047	1025	1003	981	960	938	916
	High Static	1293	1273	1252	1232	1211	1191	1170	1150	1129	1109	1088

NOTE: Do not adjust pulley further than 5 turns open.

– Factory settings

ELECTRICAL INFORMATION

2-Stage Cooling

UNIT	V–PH–HZ	VOLTAGE RANGE		COMP 1		COMP 2		OFM (ea)		IFM				
		MIN	MAX	RLA	LRA	RLA	LRA	WATTS	FLA	TYPE	Max WATTS	Max AMP Draw	EFF at Full Load	FLA
48TC*D17	208–3–60	187	253	29.5	195	30.1	225	350	1.5	STD	2278	7.875	81.3%	7.5
										MED	2694	10.71	83.8%	10.2
										HIGH	4559	15.75	83.6%	15.0
	230–3–60	187	253	29.5	195	30.1	225	350	1.5	STD	2278	7.875	81.3%	7.5
										MED	2694	10.71	83.8%	10.2
										HIGH	4559	15.75	83.6%	15.0
	460–3–60	414	506	14.7	95	16.7	114	277	0.9	STD	2278	3.57	81.3%	3.4
										MED	2694	5.04	83.8%	4.8
										HIGH	4559	7.77	83.6%	7.4
	575–3–60	518	633	12.2	80	12.2	80	397	0.6	STD	1870	2.94	81.1%	2.8
										MED	1870	2.94	81.1%	2.8
										HIGH	4470	5.88	83.6%	5.6
48TC*D20	208–3–60	187	253	29.5	195	30.1	225	350	1.5	STD	2694	10.71	83.8%	10.2
										MED	4559	15.75	83.6%	15.0
										HIGH	4278	13.44	87.5%	12.8
	230–3–60	187	253	29.5	195	30.1	225	350	1.5	STD	2694	10.71	83.8%	10.2
										MED	4559	15.75	83.6%	15.0
										HIGH	4278	13.44	87.5%	12.8
	460–3–60	414	506	14.7	95	16.7	114	277	0.9	STD	2694	5.04	83.8%	4.8
										MED	4559	7.77	83.6%	7.4
										HIGH	4278	6.72	87.5%	6.4
	575–3–60	518	633	12.2	80	12.2	80	397	0.6	STD	1870	2.94	81.1%	2.8
										MED	4470	5.88	83.6%	5.6
										HIGH	4231	5.355	87.5%	5.1
48TC*D24	208–3–60	187	253	48.1	245	29.5	195	350	1.5	STD	4559	15.75	83.6%	15.0
										MED	4278	13.44	87.5%	12.8
										HIGH	6360	20.37	88.5%	19.4
	230–3–60	187	253	48.1	245	29.5	195	350	1.5	STD	4559	15.75	83.6%	15.0
										MED	4278	13.44	87.5%	12.8
										HIGH	6360	20.37	88.5%	19.4
	460–3–60	414	506	18.6	125	14.7	95	277	0.9	STD	4559	7.77	83.6%	7.4
										MED	4278	6.72	87.5%	6.4
										HIGH	6360	10.185	88.5%	9.7
	575–3–60	518	633	14.7	100	12.2	80	397	0.6	STD	4470	5.88	83.6%	5.6
										MED	4231	5.355	87.5%	5.1
										HIGH	6331	8.19	88.5%	7.8
48TC*D28	208–3–60	187	253	48.1	245	48.1	245	350	1.5	STD	4559	15.75	83.6%	15.0
										MED	4278	13.44	87.5%	12.8
										HIGH	6360	20.37	88.5%	19.4
	230–3–60	187	253	48.1	245	48.1	245	350	1.5	STD	4559	15.75	83.6%	15.0
										MED	4278	13.44	87.5%	12.8
										HIGH	6360	20.37	88.5%	19.4
	460–3–60	414	506	18.6	125	18.6	125	277	0.9	STD	4559	7.77	83.6%	7.4
										MED	4278	6.72	87.5%	6.4
										HIGH	6360	10.185	88.5%	9.7
	575–3–60	518	633	14.7	100	14.7	100	397	0.6	STD	4470	5.88	83.6%	5.6
										MED	4231	5.355	87.5%	5.1
										HIGH	6331	8.19	88.5%	7.8

MCA/MOCP DETERMINATION NO C.O. OR UNPWRD C.O.

UNIT	NOM. V–Ph–Hz	IFM TYPE	COMBUSTION FAN MOTOR FLA	POWER EXHAUST FLA	NO C.O. or UNPWR C.O.							
					NO P.E.				w/ P.E. (pwrd fr/ unit)			
					MCA	MOCP	DISC. SIZE		MCA	MOCP	DISC. SIZE	
							FLA	LRA			FLA	LRA
48TC*D17	208/230–3–60	STD	0.52	5.9	79.1	100.0	82	485	90.9	100.0	96	485
		MED			81.8	100.0	85	502	93.6	110.0	99	502
		HIGH			86.6	100.0	91	511	98.4	125.0	105	511
	460–3–60	STD	0.3	3.1	41.7	50.0	43	243	47.9	60.0	50	243
		MED			43.1	50.0	45	252	49.3	60.0	52	252
		HIGH			45.7	60.0	48	256	51.9	60.0	55	256
	575–3–60	STD	0.24	2.4	32.1	40.0	33	188	36.9	45.0	39	188
		MED			32.1	40.0	33	188	36.9	45.0	39	188
		HIGH			34.9	45.0	37	202	39.7	50.0	42	202
48TC*D20	208/230–3–60	STD	0.52	5.9	81.8	100.0	85	502	93.6	110.0	99	502
		MED			86.6	100.0	91	511	98.4	125.0	105	511
		HIGH			84.4	100.0	88	513	96.2	125.0	102	513
	460–3–60	STD	0.3	3.1	43.1	50.0	45	252	49.3	60.0	52	252
		MED			45.7	60.0	48	256	51.9	60.0	55	256
		HIGH			44.7	60.0	47	257	50.9	60.0	54	257
	575–3–60	STD	0.24	2.4	32.1	40.0	33	188	36.9	45.0	39	188
		MED			34.9	45.0	37	202	39.7	50.0	42	202
		HIGH			34.4	45.0	36	191	39.2	50.0	42	191
48TC*D24	208/230–3–60	STD	0.52	5.9	110.6	150.0	113	534	122.4	150.0	127	534
		MED			108.4	150.0	111	536	120.2	150.0	124	536
		HIGH			115.0	150.0	118	572	126.8	150.0	132	572
	460–3–60	STD	0.3	3.1	49.0	60.0	51	269	55.2	60.0	58	269
		MED			48.0	60.0	50	270	54.2	60.0	57	270
		HIGH			51.3	60.0	54	288	57.5	70.0	61	288
	575–3–60	STD	0.24	2.4	38.6	50.0	40	224	43.4	50.0	46	224
		MED			38.1	50.0	40	213	42.9	50.0	45	213
		HIGH			40.8	50.0	43	239	45.6	60.0	48	239
48TC*D28	208/230–3–60	STD	0.52	5.9	129.2	175.0	135	584	141.0	175.0	148	584
		MED			127.0	175.0	132	586	138.8	175.0	146	586
		HIGH			133.6	175.0	140	622	145.4	175.0	153	622
	460–3–60	STD	0.3	3.1	52.9	60.0	55	299	59.1	70.0	63	299
		MED			51.9	60.0	54	300	58.1	70.0	61	300
		HIGH			55.2	60.0	58	318	61.4	70.0	65	318
	575–3–60	STD	0.24	2.4	41.1	50.0	43	244	45.9	60.0	49	244
		MED			40.6	50.0	42	233	45.4	60.0	48	233
		HIGH			43.3	50.0	46	259	48.1	60.0	51	259

LEGEND:

C.O. – Convenient outlet
DISC – Disconnect
FLA – Full load amps
IFM – Indoor fan motor
LRA – Locked rotor amps
MCA – Minimum circuit amps
MOCP – Maximum over current protection
P.E. – Power exhaust
UNPWRD CO – Unpowered convenient outlet

NOTES:

1. In compliance with NEC requirements for multimotor and combination load equipment (refer to NEC Articles 430 and 440), the overcurrent protective device for the unit shall be fuse or HACR breaker. Canadian units may be fuse or circuit breaker.
2. **Unbalanced 3-Phase Supply Voltage**
   Never operate a motor where a phase imbalance in supply voltage is greater than 2%. Use the following formula to determine the percentage of voltage imbalance.

$$\text{\% Voltage Imbalance} = 100 \times \frac{\text{max voltage deviation from average voltage}}{\text{average voltage}}$$

Example: Supply voltage is 230-3-60

AB = 224 v
BC = 231 v
AC = 226 v

$$\text{Average Voltage} = \frac{(224 + 231 + 226)}{3} = \frac{681}{3}$$

$$= 227$$

Determine maximum deviation from average voltage.
(AB) 227 – 224 = 3 v
(BC) 231 – 227 = 4 v
(AC) 227 – 226 = 1 v
Maximum deviation is 4 v.
Determine percent of voltage imbalance.

$$\text{\% Voltage Imbalance} = 100 \times \frac{4}{227}$$

$$= 1.76\%$$

This amount of phase imbalance is satisfactory as it is below the maximum allowable 2%.

IMPORTANT: If the supply voltage phase imbalance is more than 2%, contact your local electric utility company immediately.

48TC

MCA/MOCP DETERMINATION W/ PWRD C.O.

UNIT	NOM. V–Ph–Hz	IFM TYPE	COMBUSTION FAN MOTOR FLA	POWER EXHAUST FLA	NO C.O. or UNPWR C.O.							
					NO P.E.				w/ P.E. (pwrd fr/ unit)			
					MCA	MOCP	DISC. SIZE		MCA	MOCP	DISC. SIZE	
48TC*D17	208/230–3–60	STD	0.52	5.9	79.1	100.0	82	485	90.9	100.0	96	485
		MED			81.8	100.0	85	502	93.6	110.0	99	502
		HIGH			86.6	100.0	91	511	98.4	125.0	105	511
	460–3–60	STD	0.3	3.1	43.9	60.0	46	245	50.1	60.0	53	245
		MED			45.3	60.0	47	254	51.5	60.0	54	254
		HIGH			47.9	60.0	50	258	54.1	60.0	57	258
	575–3–60	STD	0.24	2.4	33.8	45.0	35	190	38.6	50.0	41	190
		MED			33.8	45.0	35	190	38.6	50.0	41	190
		HIGH			36.6	45.0	39	204	41.4	50.0	44	204
48TC*D20	208/230–3–60	STD	0.52	5.9	81.8	100.0	85	502	93.6	110.0	99	502
		MED			86.6	100.0	91	511	98.4	125.0	105	511
		HIGH			84.4	100.0	88	513	96.2	125.0	102	513
	460–3–60	STD	0.3	3.1	45.3	60.0	47	254	51.5	60.0	54	254
		MED			47.9	60.0	50	258	54.1	60.0	57	258
		HIGH			46.9	60.0	49	259	53.1	60.0	56	259
	575–3–60	STD	0.24	2.4	33.8	45.0	35	190	38.6	50.0	41	190
		MED			36.6	45.0	39	204	41.4	50.0	44	204
		HIGH			36.1	45.0	38	193	40.9	50.0	43	193
48TC*D24	208/230–3–60	STD	0.52	5.9	110.6	150.0	113	534	122.4	150.0	127	534
		MED			108.4	150.0	111	536	120.2	150.0	124	536
		HIGH			115.0	150.0	118	572	126.8	150.0	132	572
	460–3–60	STD	0.3	3.1	51.2	60.0	53	271	57.4	70.0	61	271
		MED			50.2	60.0	52	272	56.4	70.0	59	272
		HIGH			53.5	60.0	56	290	59.7	70.0	63	290
	575–3–60	STD	0.24	2.4	40.3	50.0	42	226	45.1	50.0	48	226
		MED			39.8	50.0	42	215	44.6	50.0	47	215
		HIGH			42.5	50.0	45	241	47.3	60.0	50	241
48TC*D28	208/230–3–60	STD	0.52	5.9	129.2	175.0	135	584	141.0	175.0	148	584
		MED			127.0	175.0	132	586	138.8	175.0	146	586
		HIGH			133.6	175.0	140	622	145.4	175.0	153	622
	460–3–60	STD	0.3	3.1	55.1	60.0	58	301	61.3	70.0	65	301
		MED			54.1	60.0	57	302	60.3	70.0	64	302
		HIGH			57.4	70.0	61	320	63.6	80.0	68	320
	575–3–60	STD	0.24	2.4	42.8	50.0	45	246	47.6	60.0	50	246
		MED			42.3	50.0	44	235	47.1	60.0	50	235
		HIGH			45.0	50.0	47	261	49.8	60.0	53	261

LEGEND:

C.O. – Convenient outlet
DISC – Disconnect
FLA – Full load amps
IFM – Indoor fan motor
LRA – Locked rotor amps
MCA – Minimum circuit amps
MOCP – Maximum over current protection
P.E. – Power exhaust
UNPWRD CO – Unpowered convenient outlet

NOTES:

1. In compliance with NEC requirements for multimotor and combination load equipment (refer to NEC Articles 430 and 440), the overcurrent protective device for the unit shall be fuse or HACR breaker. Canadian units may be fuse or circuit breaker.
2. **Unbalanced 3-Phase Supply Voltage**
   Never operate a motor where a phase imbalance in supply voltage is greater than 2%. Use the following formula to determine the percentage of voltage imbalance.

$$\% \text{ Voltage Imbalance} = 100 \times \frac{\text{max voltage deviation from average voltage}}{\text{average voltage}}$$

Example: Supply voltage is 230-3-60

AB = 224 v
BC = 231 v
AC = 226 v

$$\text{Average Voltage} = \frac{(224 + 231 + 226)}{3} = \frac{681}{3}$$

$$= 227$$

Determine maximum deviation from average voltage.
(AB) 227 – 224 = 3 v
(BC) 231 – 227 = 4 v
(AC) 227 – 226 = 1 v
Maximum deviation is 4 v.
Determine percent of voltage imbalance.

$$\% \text{ Voltage Imbalance} = 100 \times \frac{4}{227}$$

$$= 1.76\%$$

This amount of phase imbalance is satisfactory as it is below the maximum allowable 2%.

IMPORTANT: If the supply voltage phase imbalance is more than 2%, contact your local electric utility company immediately.

APPENDIX IV. WIRING DIAGRAM LIST

Wiring Diagrams

SIZE	Voltage	Control	Power
D17	208/230–3–60	50HE500751	50HE500889
	460–3–60	50HE500751	50HE500752
	575–3–60	50HE500751	50HE500888
D20	208/230–3–60	50HE500751	50HE500889
	460–3–60	50HE500751	50HE500752
	575–3–60	50HE500751	50HE500888
D24	208/230–3–60	50HE500751	50HE500889
	460–3–60	50HE500751	50HE500752
	575–3–60	50HE500751	50HE500888
D28	208/230–3–60	50HE500751	50HE500889
	460–3–60	50HE500751	50HE500752
	575–3–60	50HE500751	50HE500888
ALL	PremierLink*	50HE500891	
ALL	RTU–MP*	50HE500893	

NOTE: Component arrangement on Control; Legend on Power Schematic

* PremierLink and RTU-MP control labels overlay a portion of the base unit control label. The base unit label drawing and the control option drawing are required to provide a complete unit control diagram.

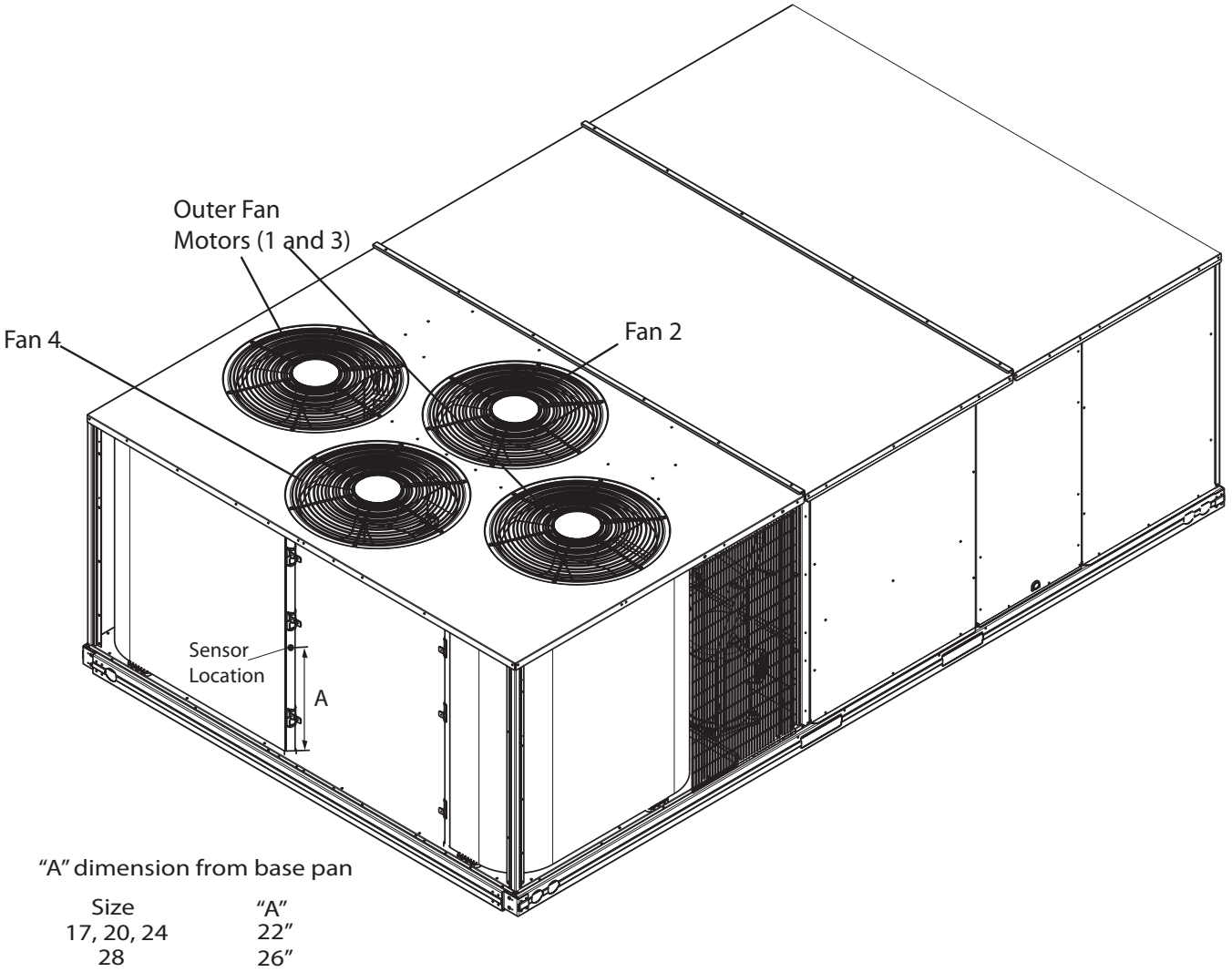

Fig. 89 - 48TC*D08-D12 Outdoor Circuiting

NOTE: The low ambient kit for the 12.5 ton unit utilizes a pressure transducer, and therefore there is no Motormaster temperature sensor location for this unit.

Copyright 2010 Carrier Corp. • 7310 W. Morris St. • Indianapolis, IN 46231 Printed in U.S.A. Edition Date: 3/10

Catalog No: 48TC-04SM

Manufacturer reserves the right to change, at any time, specifications and designs without notice and without obligations.

Replaces: NEW

UNIT START-UP CHECKLIST

I. PRELIMINARY INFORMATION:

MODEL NO.:_____ SERIAL NO: _____

DATE:_____ TECHNICIAN: _____

BUILDING LOCATION:_____

II. PRE-START-UP (insert check mark in box as each item is completed):

☐ CHECK RATING PLATE VOLTAGE MATCHES POWER SUPPLY TO UNIT
☐ VERIFY THAT ALL PACKAGING MATERIALS HAVE BEEN REMOVED FROM UNIT
☐ VERIFY THAT CONDENSATE CONNECTION IS INSTALLED PER INSTALLATION INSTRUCTIONS
☐ VERIFY THAT FLUE HOOD IS INSTALLED
☐ CHECK ALL ELECTRICAL CONNECTIONS AND TERMINALS FOR TIGHTNESS
☐ CHECK TO ENSURE NO WIRES ARE TOUCHING REFRIGERANT TUBING OR SHARP EDGES
☐ CHECK GAS PIPING FOR LEAKS
☐ CHECK THAT RETURN-AIR FILTER IS CLEAN AND IN PLACE
☐ VERIFY THAT UNIT INSTALLATION IS LEVEL
☐ CHECK FAN WHEEL AND PROPELLER FOR LOCATION IN HOUSING/ORIFICE AND VERIFY SETSCREW IS TIGHT
☐ VERIFY PULLEY ALIGNMENT AND BELT TENSION ARE CORRECT

III. START-UP

ELECTRICAL

SUPPLY VOLTAGE	L1-L2	_____	L2-L3	_____	L3-L1	_____
COMPRESSOR 1	L1	_____	L2	_____	L2	_____
COMPRESSOR 2	L1	_____	L2	_____	L2	_____
INDOOR FAN AMPS	L1	_____	L2	_____	L2	_____

TEMPERATURES

OUTDOOR-AIR TEMPERATURE	_____	DB	_____	WB
RETURN-AIR TEMPERATURE	_____	DB	_____	WB
COOLING SUPPLY AIR	_____	DB	_____	WB
GAS HEAT SUPPLY AIR	_____	DB		

PRESSURES

GAS INLET PRESSURE		_____	IN. WG		
GAS MANIFOLD PRESSURE		_____	IN. WG (LOW FIRE)	_____	IN. WG (HI FIRE)
REFRIGERANT SUCTION	CIR 1	_____	PSIG	_____	TEMP °F
	CIR 2	_____	PSIG	_____	TEMP °F
REFRIGERANT DISCHARGE	CIR 1	_____	PSIG	_____	TEMP °F
	CIR 2	_____	PSIG	_____	TEMP °F

☐ VERIFY REFRIGERANT CHARGE USING CHARGING CHARTS
☐ VERIFY THAT 3-PHASE SCROLL COMPRESSORS ARE ROTATING IN CORRECT DIRECTION