# 48VR-K
# Performance™ 15.2+ SEER2 2-Stage Packaged HYBRID HEAT® Dual Fuel System with Puron® (R-410A) Refrigerant
# Single Phase
# 2-5 Nominal Tons (Sizes 24-60)

Carrier®

Turn to the experts

# Installation Instructions

**IMPORTANT:** Effective January 1, 2015, all split system and packaged air conditioners must be installed pursuant to applicable regional efficiency standards issued by the Department of Energy.

**NOTE:** Read the entire instruction manual before starting the installation.

**NOTE:** Installer: Make sure the Owner's Manual and Service Instructions are left with the unit after installation.

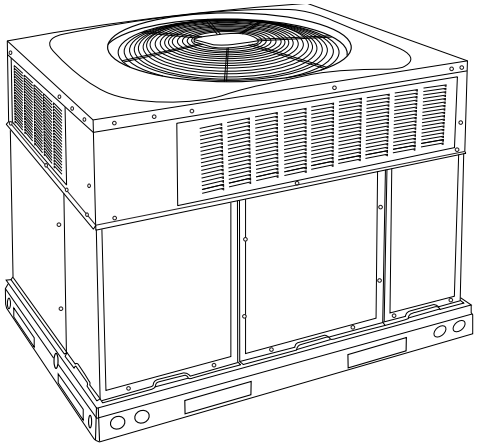

A09033

**Fig. 1 – Unit 48VR**
**(Low NOx Model Available)**

## Table of Contents


Introduction . . . . . 2
Receiving and Installation . . . . . 3
- Identify Unit . . . . . 3
- Inspect Shipment . . . . . 3
- Roof Curb . . . . . 3
- Slab Mount . . . . . 3
- Inspection . . . . . 4
- Rigging/Lifting of Unit (See Fig. 6) . . . . . 4
- Configuring Units for Downflow (Vertical) Discharge . . . . . 11
- High-Voltage Connections . . . . . 12
- Special Procedures for 208-v Operation . . . . . 13
- Control Voltage Connections . . . . . 13
- Standard Connection . . . . . 13
- Heat Anticipator Setting (Electro-Mechanical Thermostats only) 13
- Balance Point Setting-Thermidistat or Hybrid Thermostat . . . 13
- Transformer Protection . . . . . 14

Pre-Start-up . . . . . 14
Start-up . . . . . 14
- Check Gas Heating Control . . . . . 15
- Check Gas Input . . . . . 15
- Adjust Gas Input . . . . . 16
- Check Burner Flame . . . . . 17
- Normal Operation . . . . . 20
- Airflow and Temperature Rise . . . . . 20
- Gas Heating Sequence of Operation . . . . . 20
- Limit Switches . . . . . 20
- Rollout Switch . . . . . 20
- Checking Cooling Control Operation . . . . . 20
- Checking and Adjusting Refrigerant Charge . . . . . 21
- Indoor Airflow and Airflow Adjustments . . . . . 21
- Cooling Sequence of Operation . . . . . 22
- Demand Defrost Mode . . . . . 22

Maintenance . . . . . 45
- Air Filter . . . . . 45
- Indoor Blower and Motor . . . . . 45
- Induced Draft (combustion air) Blower Assembly . . . . . 45
- Flue Gas Passageways . . . . . 46
- Limit Switch . . . . . 46
- Burner Ignition . . . . . 46
- Main Burners . . . . . 46
- Outdoor Coil, Indoor Coil, and Condensate Drain Pan . . . . . 46
- Outdoor Fan . . . . . 47
- Electrical Controls and Wiring . . . . . 47
- Refrigerant Circuit . . . . . 47
- Gas Input . . . . . 48
- Evaporator Airflow . . . . . 48
- Defrost Thermostat . . . . . 48
- Puron Items . . . . . 48
- Metering Device (Thermostatic Expansion Valve & Piston) . . 48
- Pressure Switches . . . . . 48
- Loss of Charge Switch . . . . . 48
- High-Pressure Switch . . . . . 48
- Copeland Scroll Compressor (Puron Refrigerant) . . . . . 49
- Refrigerant System . . . . . 49
- Servicing Systems on Roofs with Synthetic Materials . . . . . 49
- Synthetic Roof Precautionary Procedure . . . . . 49
- Liquid Line Filter Drier . . . . . 49
- Puron (R-410A) Refrigerant Charging . . . . . 49

Troubleshooting . . . . . 49
Start-up Checklist . . . . . 49


## Safety Considerations

Improper installation, adjustment, alteration, service maintenance, or use can cause explosion, fire, electrical shock, or other conditions which may cause death, personal injury, or property damage. Consult a qualified installer, service agency, or your distributor or branch for information or assistance. The qualified installer or agency must use factory-authorized kits or accessories when modifying this product. Refer to the individual instructions packaged with the kits or accessories when installing.

Follow all safety codes. Wear safety glasses, protective clothing, and work gloves. Have a fire extinguisher available. Read these instructions thoroughly and follow all warnings or cautions included in literature and attached to the unit. consult local building codes, the current editions of

the National Fuel Gas Code (NFGC) NFPA 54/ANSI Z223.1, and the National Electrical Code (NEC) NFPA 70.

In Canada refer to the current editions of the National Standards of Canada CAN/CSA-B149.1 and .2 Natural Gas and Propane Installation codes, and Canadian Electrical Code CSA C22.1

Recognize safety information. This is the safety-alert symbol ⚠. When you see this symbol on the unit and in instructions or manuals, be alert to the potential for personal injury. Understand these signal words: DANGER, WARNING, and CAUTION. These words are used with the safety-alert symbol. DANGER identifies the most serious hazards which will result in severe personal injury or death. WARNING signifies hazards which could result in personal injury or death. CAUTION is used to identify unsafe practices which may result in minor personal injury or product and property damage. NOTE is used to highlight suggestions which will result in enhanced installation, reliability, or operation.

**⚠ WARNING**

**CARBON MONOXIDE POISONING HAZARD**

Failure to follow this warning could result in personal injury and/or death.

Carbon Monoxide (CO) is a colorless, odorless, and tasteless poisonous gas that can be fatal when inhaled. Follow all installation, maintenance, and service instructions. See additional information below regarding the installation of a CO Alarm.

Most states is the USA and jurisdictions in Canada have laws that require the use of Carbon Monoxide (CO) alarms with fuel burning products. Examples of fuel burning products are furnaces, boilers, space heaters, generators, water heaters, stoves/ranges, clothes dryers, fireplaces, incinerators, automobiles, and other internal combustion engines. Even if there are no laws in your jurisdiction requiring a CO Alarm, it's highly recommended that whenever any fuel burning product is used in or around the home or business that the dwelling be equipped with a CO Alarm(s). The Consumer Product Safety Commission recommends the use of CO Alarm(s). The CO Alarm(s) must be installed, operated, and maintained according to the CO Alarm manufacturer's instructions. For more information about Carbon Monoxide, local laws, or to purchase a CO Alarm only, please visit the following website https://www.kidde.com

**⚠ WARNING**

**ELECTRICAL SHOCK HAZARD**

Failure to follow this warning could result in personal injury or death.

Before installing or servicing system, always turn off main power to system and install lockout tag. There may be more than one disconnect switch. Turn off accessory heater power switch if applicable.

**⚠ WARNING**

**PERSONAL INJURY AND ENVIRONMENTAL HAZARD**

Failure to relieve system pressure could result in personal injury and/or death.

1. Relieve pressure and recover all refrigerant before servicing existing equipment, and before final unit disposal. Use all service ports and open all flow-control devices, including solenoid valves.
2. Federal regulations require that you do not vent refrigerant into the atmosphere. Recover during system repair or final unit disposal.

**⚠ WARNING**

**FIRE, EXPLOSION, ELECTRICAL SHOCK AND CARBON MONOXIDE POISONING HAZARD**

Failure to follow this warning could result in personal injury or unit damage.

A qualified installer or agency must use only factory-authorized kits or accessories when modifying this product.

**⚠ WARNING**

**FIRE, EXPLOSION, ELECTRICAL SHOCK AND CARBON MONOXIDE POISONING HAZARD**

Failure to follow this warning could result in personal injury or unit damage.

A qualified installer or agency must use only factory-authorized kits or accessories when modifying this product.

**⚠ CAUTION**

**CUT HAZARD**

Failure to follow this caution may result in personal injury.

When removing access panels (see Fig. 18) or performing maintenance functions inside your unit, be aware of sharp sheet metal parts and screws. Although special care is taken to reduce sharp edges to a minimum, be extremely careful and wear appropriate protective clothing, safety glasses and gloves when handling parts or reaching into the unit.

**⚠ WARNING**

**PERSONAL INJURY AND PROPERTY DAMAGE HAZARD**

For continued performance, reliability, and safety, the only approved accessories and replacement parts are those specified by the equipment manufacturer. The use of non-manufacturer approved parts and accessories could invalidate the equipment limited warranty and result in fire risk, equipment malfunction, and failure. Please review manufacturer's instructions and replacement part catalogs available from your equipment supplier.

**⚠ WARNING**

**FIRE, INJURY, OR DEATH HAZARD**

Failure to follow this warning could result in property damage, personal injury, or death.

This unit was manufactured to operate with natural gas. When fuel supply is liquid propane gas (LP), this unit MUST be converted with a factory approved LP conversion kit. See rating plate for approved conversion kits.

## Introduction

This unit (see Fig. 1) is a fully self-contained, combination Category I gas heating/electric heating and cooling unit designed for outdoor installation (See Fig. 3 and Fig. 4 for unit dimensions). All unit sizes have return and discharge openings for both horizontal and downflow configurations, and are factory shipped with all downflow duct openings

covered. Units may be installed either on a rooftop or on a cement slab. (See Fig. 5 for roof curb dimensions).

In gas heating mode, this unit is designed for a minimum continuous return-air temperature of 55°F (13°C) db and a maximum continuous return-air temperature of 80°F (27°C) db. Failure to follow these return-air temperature limits may affect reliability of heat exchangers, motors, and other components.

Models with an N in the fifth position of the model number are dedicated Low NOx units designed for California installations. These models meet the California maximum oxides of nitrogen (NOx) emissions requirements of 40 nanograms/joule or less as shipped from the factory and must be installed in California Air Quality Management Districts or any other regions in North America where a Low NOx rule exists.

**NOTE:** Low NOx requirements apply only to natural gas installations.

**⚠ NOTICE**

If the unit gasketing or insulation must be replaced, ensure the material used is compliant with the two agency requirements listed.

1. Insulation and adhesives shall meet NFPA 90.1 requirements for flame spread and smoke generation.
2. Cabinet insulation shall meet ASHRAE Standard 62.2.

## Receiving and Installation

### Step 1 – Check Equipment

#### Identify Unit

The unit model number and serial number are stamped on the unit information plate. Check this information against shipping papers.

#### Inspect Shipment

Inspect for shipping damage before removing packaging materials. If unit appears to be damaged or is torn loose from its anchorage, have it examined by transportation inspectors before removal. Forward claim papers directly to transportation company. Manufacturer is not responsible for any damage incurred in transit. Check all items against shipping list. Immediately notify the nearest equipment distribution office if any item is missing. To prevent loss or damage, leave all parts in original packages until installation.

If the unit is to be mounted on a curb in a downflow application, review Step 9 to determine which method is to be used to remove the downflow panels before rigging and lifting into place. The panel removal process may require the unit to be on the ground.

### Step 2 – Provide Unit Support

For hurricane tie downs, contact distributor for details and PE (Professional Engineering) Certificate if required.

#### Roof Curb

Install accessory roof curb in accordance with instructions shipped with curb (See Fig. 5). Install insulation, cant strips, roofing, and flashing. Ductwork must be attached to curb.

**IMPORTANT:** The gasketing of the unit to the roof curb is critical for a water tight seal. Install gasketing material supplied with the roof curb. Improperly applied gasketing also can result in air leaks and poor unit performance.

Curb should be level to within 1/4 in. (6 mm). This is necessary for unit drain to function properly. Refer to accessory roof curb installation instructions for additional information as required.

Installation on older “G” series roof curbs.

Two accessory kits are available to aid in installing a new “G” series unit on an old “G” roof curb.

1. Accessory kit number CPADCURB001A00, (small chassis) and accessory kit number CPADCURB002A00, (large chassis) includes roof curb adapter and gaskets for the perimeter seal and duct openings. No additional modifications to the curb are required when using this kit.
2. An alternative to the adapter curb is to modify the existing curb by removing the outer horizontal flange and use accessory kit number CPGSKTKIT001A00 which includes spacer blocks (for easy alignment to existing curb) and gaskets for the perimeter seal and duct openings. This kit is used when existing curb is modified by removing outer horizontal flange.

**⚠ CAUTION**

**UNITS/STRUCTURAL DAMAGE HAZARD**

Failure to follow this caution may result in property damage.

Ensure there is sufficient clearance for saw blade when cutting the outer horizontal flange of the roof curb so there is no damage to the roof or flashing.

#### Slab Mount

Place the unit on a solid, level pad that is at least 2 in. (51 mm) above grade. The pad should extend approximately 2 in. (51 mm) beyond the casing on all 4 sides of the unit. (See Fig. 2.) Do not secure the unit to the pad except when required by local codes.

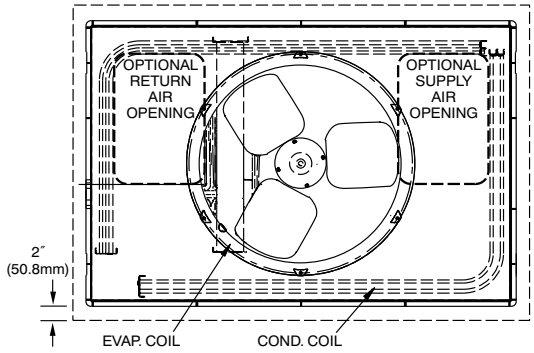


A07926

**Fig. 2 – Slab Mounting Details**

### Step 3 – Field Fabricate Ductwork

Secure all ducts to roof curb and building structure on vertical discharge units. Do not connect ductwork to unit. For horizontal applications, unit is provided with flanges on the horizontal openings. All ductwork should be secured to the flanges. Insulate and weatherproof all external ductwork, joints, and roof openings with counter flashing and mastic in accordance with applicable codes.

Ducts passing through an unconditioned space must be insulated and covered with a vapor barrier.

If a plenum return is used on a vertical unit, the return should be ducted through the roof deck to comply with applicable fire codes.

Read unit rating plate for any required clearances around ductwork. Cabinet return-air static shall not exceed -.25 IN. W.C.

### Step 4 – Provide Clearances

**IMPORTANT:** The unit must be secured to the curb by installing screws through the bottom of the curb flange and into the unit base rails. When installing large base units onto the common curb, the screws must be installed before allowing the full weight of the unit to rest on the curb. A minimum of six screws are required for large base units. Failure to secure unit properly could result in an unstable unit. See Warning near Rigging/Lifting information and accessory curb instructions for more details.

The required minimum operating and service clearances are shown in Fig. 3 and Fig. 4. Adequate combustion, ventilation and condenser air must be provided.

**IMPORTANT:** Do not restrict outdoor airflow. An air restriction at either the outdoor-air inlet or the fan discharge may be detrimental to compressor life.

The outdoor fan pulls air through the outdoor coil and discharges it through the top grille. Be sure that the fan discharge does not recirculate to the outdoor coil. Do not locate the unit in either a corner or under an overhead obstruction. The minimum clearance under a partial overhang (such as a normal house overhang) is 48-in. (1219 mm) above the unit top. The maximum horizontal extension of a partial overhang must not exceed 48-in. (1219 mm).

Do not place the unit where water, ice, or snow from an overhang or roof will damage or flood the unit. Do not install the unit on carpeting or other combustible materials. Slab-mounted units should be at least 2 in. (51 mm) above the highest expected water and runoff levels. Do not use unit if it has been under water.

## Step 5 – Rig and Place Unit

Rigging and handling of this equipment can be hazardous for many reasons due to the installation location (roofs, elevated structures, etc.).

Only trained, qualified crane operators and ground support staff should handle and install this equipment.

When working with this equipment, observe precautions in the literature, on tags, stickers, and labels attached to the equipment, and any other safety precautions that might apply.

Training for operators of the lifting equipment should include, but not be limited to, the following:

1. Application of the lifter to the load, and adjustment of the lifts to adapt to various sizes or kinds of loads.
2. Instruction in any special operation or precaution.
3. Condition of the load as it relates to operation of the lifting kit, such as balance, temperature, etc.

Follow all applicable safety codes. Wear safety shoes and work gloves.

### Inspection

Prior to initial use, and at monthly intervals, all rigging shackles, clevis pins, and straps should be visually inspected for any damage, evidence of wear, structural deformation, or cracks. Particular attention should be paid to excessive wear at hoist hooking points and load support areas. Materials showing any kind of wear in these areas must not be used and should be discarded.

**⚠ WARNING**

**UNIT FALLING HAZARD**

Failure to follow this warning could result in personal injury or death.

Never stand beneath rigged units or lift over people.

**⚠ WARNING**

**PROPERTY DAMAGE HAZARD**

Failure to follow this warning could result in personal injury/death or property damage.

When straps are taut, the clevis should be a minimum of 36 in. (914 mm) above the unit top cover.

### Rigging/Lifting of Unit (See Fig. 6)

**⚠ WARNING**

**UNIT FALLING HAZARD**

Failure to follow this warning could result in personal injury or death.

Large base units must be secured to common curb before allowing full weight of unit to rest on curb. Install screws through curb into unit base rails while rigging crane is still supporting unit.

Lifting holes are provided in base rails as shown in Fig. 3 and Fig. 4.

1. Leave top shipping skid on the unit for use as a spreader bar to prevent the rigging straps from damaging the unit. If the skid is not available, use a spreader bar of sufficient length to protect the unit from damage.
2. Attach shackles, clevis pins, and straps to the base rails of the unit. Be sure materials are rated to hold the weight of the unit (See Fig. 6).
3. Attach a clevis of sufficient strength in the middle of the straps. Adjust the clevis location to ensure unit is lifted level with the ground.

After the unit is placed on the roof curb or mounting pad, remove the top skid.

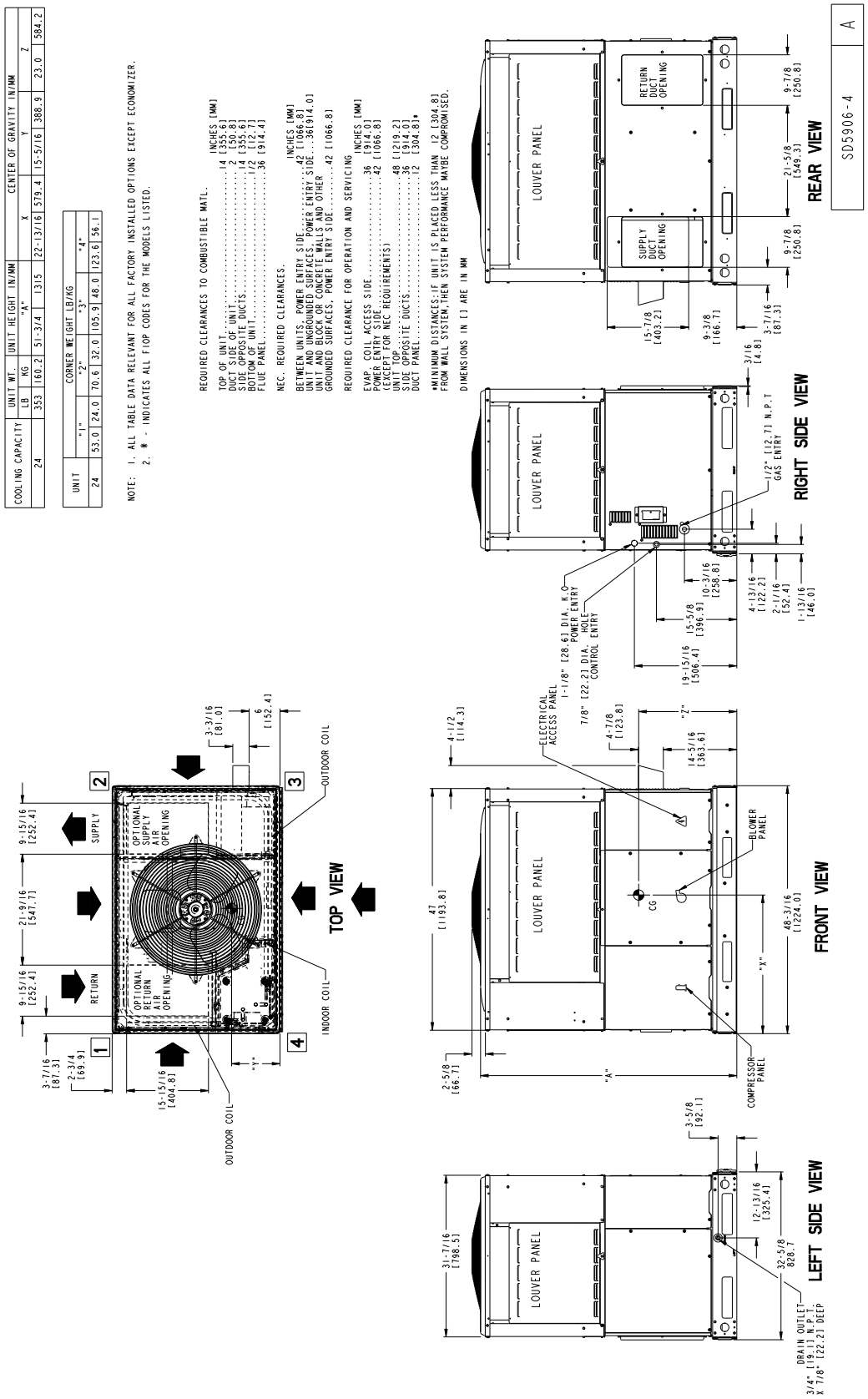


| COOLING CAPACITY | UNIT WT. | | UNIT HEIGHT IN/MM | CENTER OF GRAVITY IN/MM | | |
|---|---|---|---|---|---|---|
| | LB | KG | "A" | X | Y | Z |
| 24 | 353 | 160.2 | 51-3/4 1315 | 22-13/16 579.4 | 15-5/16 388.9 | 23.0 584.2 |

| UNIT | CORNER WEIGHT LB/KG | | | |
|---|---|---|---|---|
| | "1" | "2" | "3" | "4" |
| 24 | 53.0 24.0 | 70.6 32.0 | 105.9 48.0 | 123.6 56.1 |

NOTE: 1. ALL TABLE DATA RELEVANT FOR ALL FACTORY INSTALLED OPTIONS EXCEPT ECONOMIZER.
2. * - INDICATES ALL FIOP CODES FOR THE MODELS LISTED.

REQUIRED CLEARANCES TO COMBUSTIBLE MATL. INCHES [MM]
TOP OF UNIT.....14 [355.6]
DUCT SIDE OF UNIT.....2 [50.8]
SIDE OPPOSITE DUCTS.....14 [355.6]
BOTTOM OF UNIT.....1/2 [12.7]
FLUE PANEL.....36 [914.4]

NEC. REQUIRED CLEARANCES.

BETWEEN UNITS, POWER ENTRY SIDE..... INCHES [MM]
UNIT AND UNGROUNDED SURFACES, POWER ENTRY SIDE..42 [1066.8]
UNIT AND BLOCK OR CONCRETE WALLS AND OTHER
GROUNDED SURFACES, POWER ENTRY SIDE.....36 [914.0]
GROUNDED SURFACES, POWER ENTRY SIDE.....42 [1066.8]

REQUIRED CLEARANCE FOR OPERATION AND SERVICING
INCHES [MM]
EVAP. COIL ACCESS SIDE.....36 [914.0]
POWER ENTRY SIDE.....42 [1066.8]
(EXCEPT FOR NEC REQUIREMENTS)
UNIT TOP.....48 [1219.2]
SIDE OPPOSITE DUCTS.....36 [914.0]
DUCT PANEL.....12 [304.8]*

*MINIMUM DISTANCES:IF UNIT IS PLACED LESS THAN 12 [304.8]
FROM WALL SYSTEM,THEN SYSTEM PERFORMANCE MAYBE COMPROMISED.

DIMENSIONS IN [] ARE IN MM

A230208

**Fig. 3 – 24 Unit Dimensions**

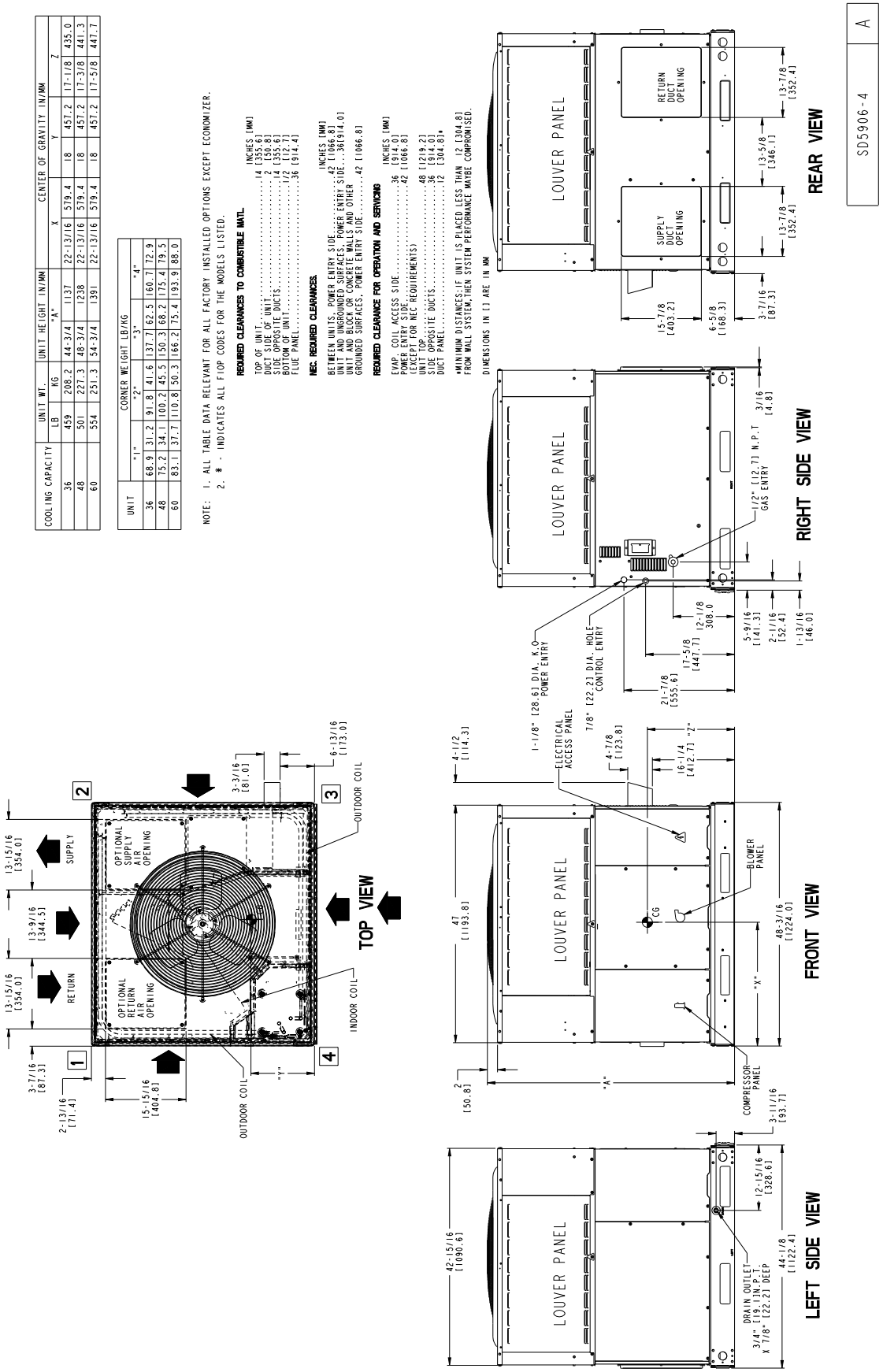


| COOLING CAPACITY | UNIT WT. | | UNIT HEIGHT IN/MM | CENTER OF GRAVITY IN/MM | | |
|---|---|---|---|---|---|---|
| | LB | KG | "A" | X | Y | Z |
| 36 | 459 | 208.2 | 44-3/4 1137 | 22-13/16 579.4 | 18 457.2 | 17-1/8 435.0 |
| 48 | 501 | 227.3 | 48-3/4 1238 | 22-13/16 579.4 | 18 457.2 | 17-3/8 441.3 |
| 60 | 554 | 251.3 | 54-3/4 1391 | 22-13/16 579.4 | 18 457.2 | 17-5/8 447.7 |

| UNIT | CORNER WEIGHT LB/KG | | | | | | | |
|---|---|---|---|---|---|---|---|---|
| | "1" | | "2" | | "3" | | "4" | |
| 36 | 68.9 | 31.2 | 91.8 | 41.6 | 137.7 | 62.5 | 160.7 | 72.9 |
| 48 | 75.2 | 34.1 | 100.2 | 45.5 | 150.3 | 68.2 | 175.4 | 79.5 |
| 60 | 83.1 | 37.7 | 110.8 | 50.3 | 166.2 | 75.4 | 193.9 | 88.0 |

NOTE: 1. ALL TABLE DATA RELEVANT FOR ALL FACTORY INSTALLED OPTIONS EXCEPT ECONOMIZER.
2. * - INDICATES ALL FIOP CODES FOR THE MODELS LISTED.

**REQUIRED CLEARANCES TO COMBUSTIBLE MATL.**

| | INCHES [MM] |
|---|---|
| TOP OF UNIT | 14 [355.6] |
| DUCT SIDE OF UNIT | 2 [50.8] |
| SIDE OPPOSITE DUCTS | 14 [355.6] |
| BOTTOM OF UNIT | 1/2 [12.7] |
| FLUE PANEL | 36 [914.4] |

**NEC. REQUIRED CLEARANCES.**

| | INCHES [MM] |
|---|---|
| BETWEEN UNITS, POWER ENTRY SIDE | 42 [1066.8] |
| UNIT AND UNGROUNDED SURFACES, POWER ENTRY SIDE | 36 [914.0] |
| UNIT AND BLOCK OR CONCRETE WALL AND OTHER GROUNDED SURFACES, POWER ENTRY SIDE | 42 [1066.8] |

**REQUIRED CLEARANCE FOR OPERATION AND SERVICING**

| | INCHES [MM] |
|---|---|
| EVAP. COIL ACCESS SIDE | 36 [914.0] |
| POWER ENTRY SIDE | 42 [1066.8] |
| (EXCEPT FOR NEC REQUIREMENTS) | |
| UNIT TOP | 48 [1219.2] |
| SIDE OPPOSITE DUCTS | 36 [914.0] |
| DUCT PANEL | 12 [304.8]* |

*MINIMUM DISTANCES:IF UNIT IS PLACED LESS THAN 12 [304.8] FROM WALL SYSTEM,THEN SYSTEM PERFORMANCE MAYBE COMPROMISED.

DIMENSIONS IN [] ARE IN MM

A230209

**Fig. 4 – 36-60 Unit Dimensions**

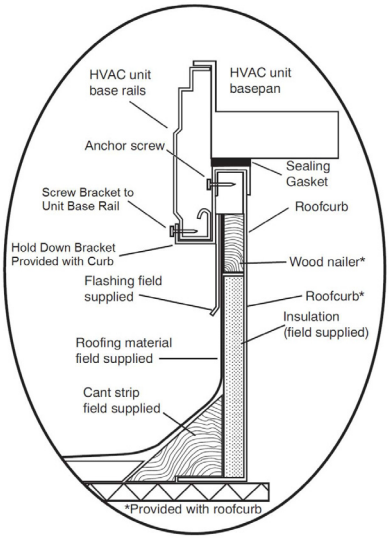


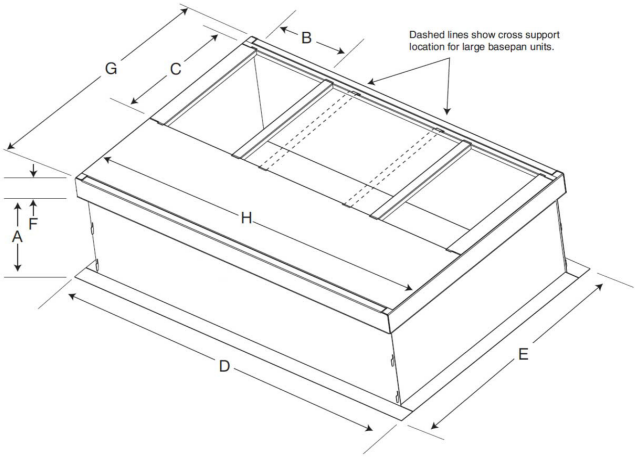


SMALL/COMMON CURB

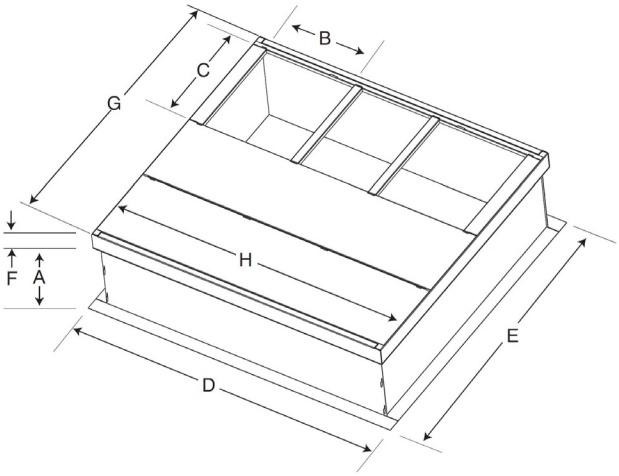


LARGE CURB

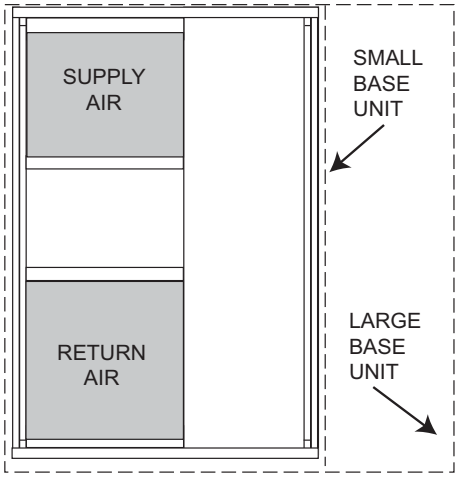


UNIT PLACEMENT ON COMMON CURB

SMALL OR LARGE BASE UNIT

A180216

| UNIT SIZE | CATALOG NUMBER | A IN. (mm) | B (small / common base) IN. (mm)* | B (large base) IN. (mm)* | C IN. (mm) | D IN. (mm) | E IN. (mm) | F IN. (mm) | G IN. (mm) | H IN. (mm) |
|---|---|---|---|---|---|---|---|---|---|---|
| Small or Large | CPRFCURB011B00 | 14 (356) | 10 (254) | 14 (356) | 16 (406) | 47.8 (1214) | 32.4 (822) | 2.7 (69) | 30.6 (778) | 46.1 (1170) |
| Large | CPRFCURB013B00 | 14 (356) | 14 (356) | | | | 43.9 (1116) | | 42.2 (1072) | |

*. Part Number CPRCURB011B00 can be used on both small and large basepan units. The cross supports must be located based on whether the unit is a small basepan or a large basepan.

NOTES:
1. Roof curb must be set up for unit being installed.
2. Seal strip must be applied, as required, to unit being installed.
3. Roof curb is made of 16-gauge steel.
4. Attach ductwork to curb (flanges of duct rest on curb).
5. Insulated panels: 1-in. (25.4 mm) thick fiberglass 1 lb. density.

**Fig. 5 – Roof Curb Dimensions**

# ⚠ CAUTION - NOTICE TO RIGGERS
# ⚠ PRUDENCE - AVIS AUX MANIPULATEUR

**ACCESS PANELS MUST BE IN PLACE WHEN RIGGING.**
**PANNEAUX D'ACCES DOIT ÊTRE EN PLACE POUR MANIPULATION.**

**Use top skid as spreader bar. / Utiliser la palette du haut comme barre de répartition**

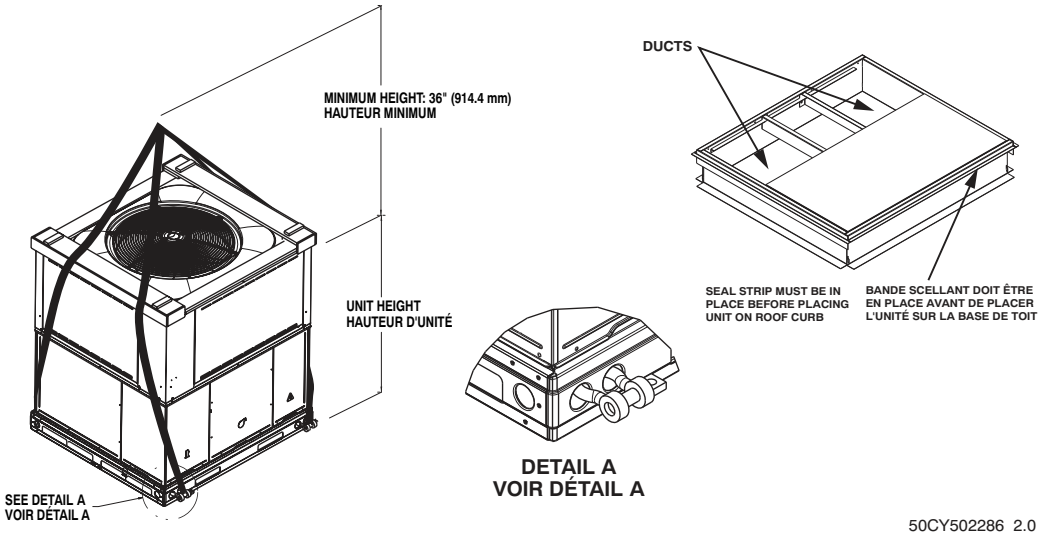


A09051

**Standard Copper Tube Aluminum Fin**

| SMALL CABINET | | | | LARGE CABINET | | | | | | |
|---|---|---|---|---|---|---|---|---|---|---|
| Unit | 24 | | | Unit | 36 | | 48 | | 60 | |
| | lb | kg | | | lb | kg | lb | kg | lb | kg |
| Rigging Weight | 362 | 164 | | Rigging Weight | 467 | 212 | 509 | 231 | 562 | 255 |

NOTE: See dimensional drawing for corner weights.

**Fig. 6 – Suggested Rigging**

## Table 1 – Physical Data

| UNIT SIZE | 24060 | 36060 | 36090 | 48090 | 48115 | 48130 | 60090 | 60115 | 60130 |
|---|---|---|---|---|---|---|---|---|---|
| NOMINAL CAPACITY (ton) | 2 | 3 | 3 | 4 | 4 | 4 | 5 | 5 | 5 |
| SHIPPING WEIGHT** lb. | 362 | 467 | 467 | 509 | 509 | 509 | 562 | 562 | 562 |
| SHIPPING WEIGHT** (kg) | 164 | 212 | 212 | 231 | 231 | 231 | 255 | 255 | 255 |
| COMPRESSORS | Scroll | | | | | | | | |
| Quantity | 1 | | | | | | | | |
| REFRIGERANT (R-410A) | | | | | | | | | |
| Quantity lb | 8.2 | 10.0 | 10.0 | 12.0 | 12.0 | 12.0 | 16.6 | 16.6 | 16.6 |
| Quantity (kg) | 3.7 | 4.5 | 4.5 | 5.4 | 5.4 | 5.4 | 7.53 | 7.53 | 7.53 |
| REFRIGERANT METERING DEVICE | TXV, Indoor TXV | | | | | | | | |
| ORIFICE OD in. | .032 (2) | .042 (2) | .042 (2) | .042 (2) | .042 (2) | .042 (2) | .052 (2) | .052 (2) | .052 (2) |
| (mm) | .81 (2) | 1.07 (2) | 1.07 (2) | 1.07 (2) | 1.07 (2) | 1.07 (2) | 1.32 (2) | 1.32 (2) | 1.32 (2) |
| OUTDOOR COIL | | | | | | | | | |
| Rows...Fins/in. | 1...21 | 2...21 | 2...21 | 2...21 | 2...21 | 2...21 | 2...21 | 2...21 | 2...21 |
| Face Area (sq ft) | 18.8 | 13.6 | 13.6 | 17.5 | 17.5 | 17.5 | 23.3 | 23.3 | 23.3 |
| OUTDOOR FAN | | | | | | | | | |
| Nominal CFM | 2100 | 3000 | 3000 | 3300 | 3300 | 3300 | 3600 | 3600 | 3600 |
| Diameter in. | 24 | 26 | 26 | 26 | 26 | 26 | 26 | 26 | 26 |
| Diameter (mm) | 609.6 | 660.4 | 660.4 | 660.4 | 660.4 | 660.4 | 660.4 | 660.4 | 660.4 |
| Motor Hp (Rpm) | 1/12 (800) | 1/5 (810) | 1/5 (810) | 1/5 (810) | 1/5 (810) | 1/5 (810) | 1/5 (810) | 1/5 (810) | 1/5 (810) |
| INDOOR COIL | | | | | | | | | |
| Rows...Fins/in. | 3...17 | 3...17 | 3...17 | 3...17 | 3...17 | 3...17 | 4...17 | 4...17 | 4...17 |
| Face Area (sq ft) | 3.7 | 4.7 | 4.7 | 5.7 | 5.7 | 5.7 | 5.7 | 5.7 | 5.7 |
| INDOOR BLOWER | | | | | | | | | |
| Nominal Low Stage Cooling Airflow (Cfm) | 675 | 900 | 900 | 1200 | 1200 | 1200 | 1400 | 1400 | 1400 |
| Nominal High Stage Cooling Airflow (Cfm) | 855 | 1200 | 1200 | 1600 | 1600 | 1600 | 1750 | 1750 | 1750 |
| Size in. | 10x10 | 11x10 | 11x10 | 11x10 | 11x10 | 11x10 | 11x10 | 11x10 | 11x10 |
| Size (mm.) | 254x254 | 279.4x254 | 279.4x254 | 279.4x254 | 279.4x254 | 279.4x254 | 279.4x254 | 279.4x254 | 279.4x254 |
| Motor HP (RPM) | 1/2 (1050) | 3/4 (1000) | 3/4 (1000) | 1.0 (1075) | 1.0 (1075) | 1.0 (1075) | 1.0 (1075) | 1.0 (1075) | 1.0 (1075) |
| FURNACE SECTION* | | | | | | | | | |
| Burner Orifice No. (Qty...Drill Size) | | | | | | | | | |
| Natural Gas (Factory Installed) | 3...44 | 3...44 | 3…38 | 3...38 | 3...33 | 3...31 | 3...38 | 3...33 | 3...31 |
| Propane Gas | 3...55 | 3...55 | 3…53 | 3...53 | 3...51 | 3...49 | 3...53 | 3...51 | 3...49 |
| HIGH-PRESSURE SWITCH (psig) Cut-out Reset (Auto) | 650 +/- 15<br>420 +/- 25 | | | | | | | | |
| LOSS-OF-CHARGE / LOW-PRESSURE SWITCH (Liquid Line) (psig) cut-out Reset (auto) | 20 +/- 5<br>45 +/- 5 | | | | | | | | |
| RETURN-AIR FILTERS† | | | | | | | | | |
| Throwaway Size in. | 20x24x1 | 24x30x1 | | 24x36x1 | | | | | |
| (mm) | 508x610x25 | 610x762x25 | | 610x914x25 | | | | | |

*. Based on altitude of 0 to 2000 ft (0-610 m).

†. Required filter sizes shown are based on the larger of the AHRI (Air Conditioning Heating and Refrigeration Institute) rated cooling airflow or the heating airflow velocity of 300 ft/minute for throwaway type. Air filter pressure drop for non-standard filters must not exceed 0.08 IN. W.C.
If using accessory filter rack refer to the filter rack installation instructions for correct filter sizes and quantity.

## Step 6 – Connect Condensate Drain

**NOTE:** When installing condensate drain connection be sure to comply with local codes and restrictions.

The unit disposes of condensate water through a 3/4 in. NPT fitting which exits through the base on the evaporator coil access side. See Fig. 3 and Fig. 4 for location.

Condensate water can be drained directly onto the roof in rooftop installations (where permitted) or onto a gravel apron in ground level installations. Install a field-supplied 2-in. (51 mm) condensate trap at the end of condensate connection to ensure proper drainage. Make sure that the outlet of the trap is at least 1 in. (25 mm) lower than the drain-pan condensate connection to prevent the pan from overflowing (See Fig. 7). Prime the trap with water. When using a gravel apron, make sure it slopes away from the unit.

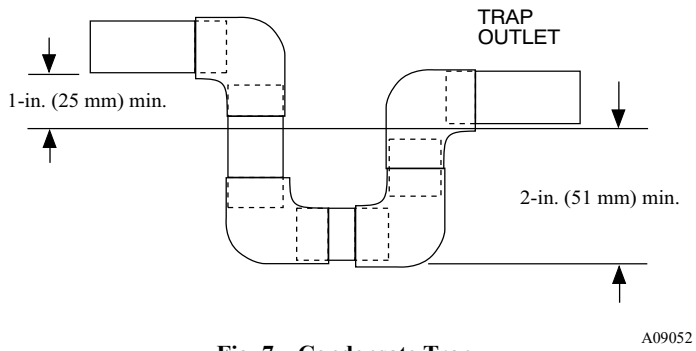


**Fig. 7 – Condensate Trap**

Connect a drain tube using a minimum of 3/4-in. PVC or 3/4-in. copper pipe (all field-supplied) at the outlet end of the 2-in. (51 mm) trap. Do not undersize the tube. Pitch the drain tube downward at a slope of at least 1-in. (25 mm) for every 10 ft (3.1 m) of horizontal run. Be sure to check the drain tube for leaks.

## Step 7 – Install Flue Hood

The flue assembly is secured and shipped in the return air duct. Remove duct cover to locate the assembly (See Fig. 9).

**NOTE:** Dedicated low NOx models MUST be installed in California Air Quality Management Districts where a Low NOx rule exists.

These models meet the California maximum oxides of nitrogen (NOx) emissions requirements of 40 nanograms/joule or less as shipped from the factory.

**NOTE:** Low NOx requirements apply only to natural gas installations.

**⚠ WARNING**

**CARBON MONOXIDE POISONING HAZARD**

Failure to follow this warning could result in personal injury or death.

The venting system is designed to ensure proper venting. The flue hood assembly must be installed as indicted in this section of the unit installation instructions.

Install the flue hood as follows:

1. This installation must conform with local building codes and with NFPA 54/ANSI Z223.1 National Fuel Gas Code (NFGC), (in Canada, CAN/CGA B149.1, and B149.2) latest revision. Refer to Provincial and local plumbing or wastewater codes and other applicable local codes.
2. Remove flue hood from shipping location (inside the return section of the blower compartment-see Fig. 9). Remove the return duct cover to locate the flue hood. Place flue hood assembly over flue panel. Orient screw holes in flue hood with holes in the flue panel.
3. Secure flue hood to flue panel by inserting a single screw on the top flange and the bottom flange of the hood.

## Step 8 – Install Gas Piping

The gas supply pipe enters the unit through the access hole provided. The gas connection to the unit is made to the 1/2-in. (12.7 mm) FPT gas inlet on the gas valve.

Install a gas supply line that runs to the heating section. Refer to the NFGC for gas pipe sizing. Do not use cast-iron pipe. It is recommended that a black iron pipe is used. Check the local utility for recommendations concerning existing lines. Size gas supply piping for 0.5 IN. W.C. maximum pressure drop. Never use pipe smaller than the 1/2-in. (12.7 mm) FPT gas inlet on the unit gas valve.

For natural gas applications, the gas pressure at unit gas connection must not be less than 4.0 IN. W.C. or greater than 13 IN. W.C. while the unit is operating. For propane applications, the gas pressure must not be less than 11.0 IN. W.C. or greater than 13 IN. W.C. at the unit connection.

A 1/8-in. (3.2 mm) NPT plugged tapping, accessible for test gauge connection, must be installed immediately upstream of the gas supply connection to the gas valve.

When installing the gas supply line, observe local codes pertaining to gas pipe installations. Refer to the NFPA 54/ANSI Z223.1 latest edition (in Canada, CAN/CGA B149.1).

**NOTE:** In the state of Massachusetts:

1. Gas supply connections MUST be performed by a licensed plumber or gas fitter.
2. When flexible connectors are used, the maximum length shall not exceed 36 in. (915 mm).
3. When lever handle type manual equipment shutoff valves are used, they shall be T-handle valves.
4. The use of copper tubing for gas piping is NOT approved by the state of Massachusetts.

In the absence of local building codes, adhere to the following pertinent recommendations:

1. Avoid low spots in long runs of pipe. Grade all pipe 1/4 in. (6.35 mm) for every 15 ft (4.6 m) of length to prevent traps. Grade all horizontal runs downward to risers. Use risers to connect to heating section and to meter.
2. Protect all segments of piping system against physical and thermal damage. Support all piping with appropriate straps, hangers, etc. Use a minimum of one hanger every 6 ft (1.8 m). For pipe sizes larger than 1/2 in., follow recommendations of national codes.
3. Apply joint compound (pipe dope) sparingly and only to male threads of joint when making pipe connections. Use only pipe dope that is resistant to action of liquefied petroleum gases as specified by local and/or national codes. Never use Teflon tape.
4. Install sediment trap in riser leading to heating section (See Fig. 8). This drip leg functions as a trap for dirt and condensate.
5. Install an accessible, external, manual main shutoff valve in gas supply pipe within 6 ft (1.8 m) of heating section.
6. Install ground-joint union close to heating section between unit manual shutoff and external manual main shut-off valve.
7. Pressure test all gas piping in accordance with local and national plumbing and gas codes before connecting piping to unit.

**Table 2 – Maximum Gas Flow Capacity***

| NOMINAL IRON PIPE SIZE (IN.) | INTERNAL DIAMETER (IN.) | LENGTH OF PIPE FT (m)† | | | | | | | | | | | | | |
|---|---|---|---|---|---|---|---|---|---|---|---|---|---|---|---|
| | | 10 (3) | 20 (6) | 30 (9) | 40 (12) | 50 (15) | 60 (18) | 70 (21) | 80 (24) | 90 (27) | 100 (30) | 125 (38) | 150 (46) | 175 (53) | 200 (61) |
| 1/2 | .622 | 175 | 120 | 97 | 82 | 73 | 66 | 61 | 57 | 53 | 50 | 44 | 40 | — | — |
| 3/4 | .824 | 360 | 250 | 200 | 170 | 151 | 138 | 125 | 118 | 110 | 103 | 93 | 84 | 77 | 72 |
| 1 | 1.049 | 680 | 465 | 375 | 320 | 285 | 260 | 240 | 220 | 205 | 195 | 175 | 160 | 145 | 135 |
| 1-1/4 | 1.380 | 1400 | 950 | 770 | 600 | 580 | 530 | 490 | 460 | 430 | 400 | 360 | 325 | 300 | 280 |
| 1-1/2 | 1.610 | 2100 | 1460 | 1180 | 990 | 900 | 810 | 750 | 690 | 650 | 620 | 550 | 500 | 460 | 430 |

*. Capacity of pipe in cu ft of gas per hr for gas pressure of 0.5 psig or less. Pressure drop of 0.5-IN. W.C. (based on a 0.60 specific gravity gas). Refer to Table 2 and National Fuel Gas Code NFPA 54/ANSI Z223.1.

†. This length includes an ordinary number of fittings.

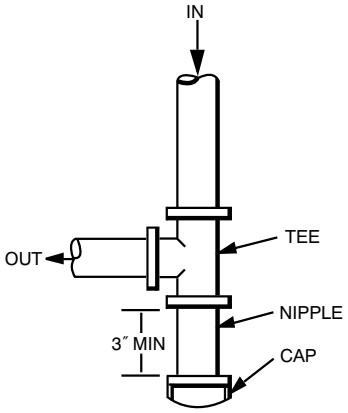


C99020

**Fig. 8 – Sediment Trap**

**NOTE:** Pressure test the gas supply system after the gas supply piping is connected to the gas valve. The supply piping must be disconnected from the gas valve during the testing of the piping systems when test pressure is in excess of 0.5 psig. Pressure test the gas supply piping system at pressures equal to or less than 0.5 psig. The unit heating section must be isolated from the gas piping system by closing the external main manual shutoff valve and slightly opening the ground-joint union.

**⚠ WARNING**

**FIRE OR EXPLOSION HAZARD**

Failure to follow this warning could result in personal injury, death and/or property damage.

-Connect gas pipe to unit using a backup wrench to avoid damaging gas controls.

-Never purge a gas line into a combustion chamber. Never test for gas leaks with an open flame. Use a commercially available soap solution made specifically for the detection of leaks to check all connections. A fire or explosion may result causing property damage, personal injury or loss of life.

-Use proper length of pipe to avoid stress on gas control manifold.

-If a flexible connector is required or allowed by authority having jurisdiction, black iron pipe shall be installed at furnace gas valve and extend a minimum of 2 in. (51 mm) outside furnace casing.

-If codes allow a flexible connector, always use a new connector. Do not use a connector which has previously serviced another gas appliance.

8. Check for gas leaks at the field-installed and factory-installed gas lines after all piping connections have been completed. Use a commercially available soap solution (or method specified by local codes and/or regulations).

## Step 9 – Install Duct Connections

The unit has duct flanges on the supply- and return-air openings on the side and bottom of the unit. For downshot applications, the ductwork connects to the roof curb (See Fig. 3 and Fig. 4 for connection sizes and locations).

### Configuring Units for Downflow (Vertical) Discharge

**⚠ WARNING**

**ELECTRICAL SHOCK HAZARD**

Failure to follow this warning could result in personal injury or death.

Before installing or servicing system, always turn off main power to system and install lockout tag. There may be more than one disconnect switch.

1. Open all electrical disconnects before starting any service work.
2. Remove horizontal (metal) duct covers to access vertical (downflow) discharge duct knockouts in unit basepan. (See Fig. 9.)

**⚠ CAUTION**

**PROPERTY DAMAGE HAZARD**

Failure to follow this caution may result in property damage.

Collect ALL screws that were removed. Do not leave screws on rooftop as permanent damage to the roof may occur.

3. For single-phase models only, on the discharge side only, remove the insulation covering the downshot (plastic) knockout. Insulation is held in place with aluminum tape. Please note that large chassis units have 2 pieces of insulation, and only the piece over the downshot knockout needs to be removed. Discard insulation.
4. To remove the downshot (plastic) knockouts for both supply and returns, break front and right side connecting tabs with a screwdriver and hammer. Push cover down to break rear and left side tabs. These plastic knockouts are held in place with tabs similar to an electrical knockout. Discard plastic knockout covers.
5. Set unit on roof curb.
6. Verify that the downshot ducts are aligned with the downshot knockout areas.
7. Re-install horizontal (metal) covers as needed to seal unit. Ensure opensings are air and watertight.

**NOTE:** The design and installation of the duct system must be in accordance with the standards of the NFPA for installation of nonresidence-type air conditioning and ventilating systems, NFPA 90A or residence-type, NFPA 90B; and/or local codes and ordinances.

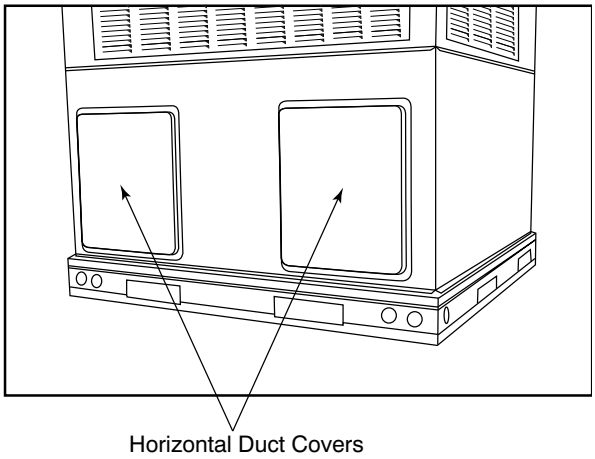


A09076

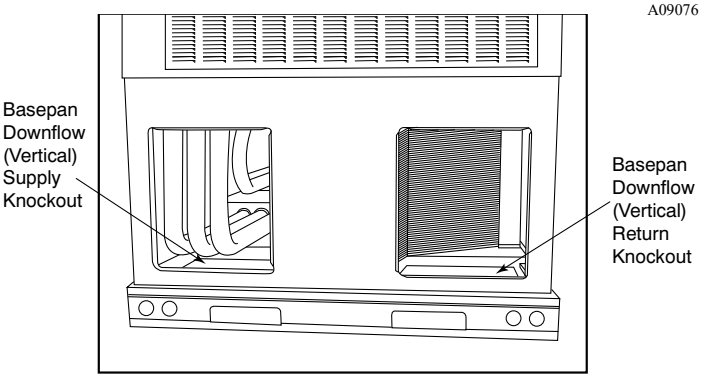


A09077

**Fig. 9 – Supply and Return Duct Opening**

Adhere to the following criteria when selecting, sizing, and installing the duct system:

1. Units are shipped for horizontal duct installation (by removing duct covers).
2. Select and size ductwork, supply-air registers, and return-air grilles according to American Society of Heating, Refrigeration and Air Conditioning Engineers (ASHRAE) recommendations.
3. Use flexible transition between rigid ductwork and unit to prevent transmission of vibration. The transition may be screwed or bolted to duct flanges. Use suitable gaskets to ensure weather-tight and airtight seal.
4. All units must have field-supplied filters or accessory filter rack installed in the return-air side of the unit. Recommended sizes for filters are shown in Table 1.
5. Size all ductwork for maximum required airflow (either heating or cooling) for unit being installed. Avoid abrupt duct size increases or decreases or performance may be affected.
6. Adequately insulate and weatherproof all ductwork located outdoors. Insulate ducts passing through unconditioned space, and use vapor barrier in accordance with latest issue of Sheet Metal and Air Conditioning Contractors National Association (SMACNA) and Air Conditioning Contractors of America (ACCA) minimum installation standards for heating and air conditioning systems. Secure all ducts to building structure.
7. Flash, weatherproof, and vibration isolate all openings in building structure in accordance with local codes and good building practices.

## Step 10 – Install Electrical Connections

**⚠ WARNING**

**ELECTRICAL SHOCK HAZARD**

Failure to follow this warning could result in personal injury or death.

The unit cabinet must have an uninterrupted, unbroken electrical ground. This ground may consist of an electrical wire connected to the unit ground screw in the control compartment, or conduit approved for electrical ground when installed in accordance with NFPA 70 (NEC) (latest edition) (in Canada, Canadian Electrical Code CSA C22.1) and local electrical codes.

**⚠ CAUTION**

**UNIT COMPONENT DAMAGE HAZARD**

Failure to follow this caution may result in damage to the unit being installed.

1. Make all electrical connections in accordance with NFPA 70 (NEC) (latest edition) and local electrical codes governing such wiring. In Canada, all electrical connections must be in accordance with CSA standard C22.1 Canadian Electrical Code Part 1 and applicable local codes. Refer to unit wiring diagram.
2. Use only copper conductor for connections between field-supplied electrical disconnect switch and unit. DO NOT USE ALUMINUM WIRE.
3. Be sure that high-voltage power to unit is within operating voltage range indicated on unit rating plate. Consult local power company for correction of improper voltage and/or phase imbalance.
4. Insulate low-voltage wires for highest voltage contained within conduit when low-voltage control wires are in same conduit as high-voltage wires.
5. Do not damage internal components when drilling through any panel to mount electrical hardware, conduit, etc.
6. Route field power supply(s) away from areas that could be damaged by lawn and garden equipment or other accidental damage.

### High-Voltage Connections

When routing power leads into unit, use only copper wire between disconnect and unit. The high voltage leads should be in a conduit until they enter the duct panel; conduit termination at the duct panel must be watertight.

The unit must have a separate electrical service with a field-supplied, waterproof disconnect switch mounted at, or within sight from, the unit. Refer to the unit rating plate, NEC and local codes for maximum fuse/circuit breaker size and minimum circuit amps (ampacity) for wire sizing.

The field-supplied disconnect switch box may be mounted on the unit over the high-voltage inlet hole when the standard power and low-voltage entry points are used (See Fig. 3 and Fig. 4 for acceptable location).

**NOTE:** Field supplied disconnect switch box should be positioned so that it does not cover up any of the unit gas combustion supply air louvers.

See unit wiring label (Fig. 14 - Fig. 15) and Fig. 10 for reference when making high voltage connections. Proceed as follows to complete the high-voltage connections to the unit.

Single phase units:

1. Run the high-voltage (L1, L2) and ground lead into the control box.
2. Connect ground lead to chassis ground connection.
3. Locate the black and yellow wires connected to the line side of the contactor (if equipped).
4. Connect field L1 to black wire from connection 11 of the compressor contactor.
5. Connect field wire L2 to yellow wire from connection 23 of the compressor contactor.

## Special Procedures for 208-v Operation

**WARNING**

**ELECTRICAL SHOCK HAZARD**

Failure to follow this warning could result in personal injury or death.

Make sure the power supply to the unit is switched OFF and install lockout tag. before making any wiring changes. With disconnect switch open, move black wire from transformer (3/16 in. [4.8 mm]) terminal marked 230 to terminal marked 208. This retaps transformer to primary voltage of 208 vac.

**WARNING**

**ELECTRICAL SHOCK FIRE/EXPLOSION HAZARD**

Failure to follow this warning could result in personal injury or death and property damage.

Before making any wiring changes, make sure the gas supply is switched off first. Then switch off the power supply to the unit and install lockout tag.

## Control Voltage Connections

Do not use any type of power-stealing thermostat. Unit control problems may result.

Use no. 18 American Wire Gage (AWG) color-coded, insulated (35°C minimum) wires to make the control voltage connections between the thermostat and the unit. If the thermostat is located more than 100 ft (30.5 m) from the unit (as measured along the control voltage wires), use no. 16 AWG color-coded, insulated (35°C minimum) wires.

## Standard Connection

Run the low-voltage leads from the thermostat, through the inlet hole, and into unit low-voltage splice box.

Locate nine 18-gage wires leaving control box. These low-voltage connection leads can be identified by the colors red, green, yellow, brown, blue, white, pink, black and orange (See Fig. 10). Ensure the leads are long enough to be routed into the low-voltage splice box (located below right side of control box). Route leads through hole in bottom of control box and make low-voltage connections (See Fig. 10). Secure all cut wires, so that they do not interfere with operation of unit.

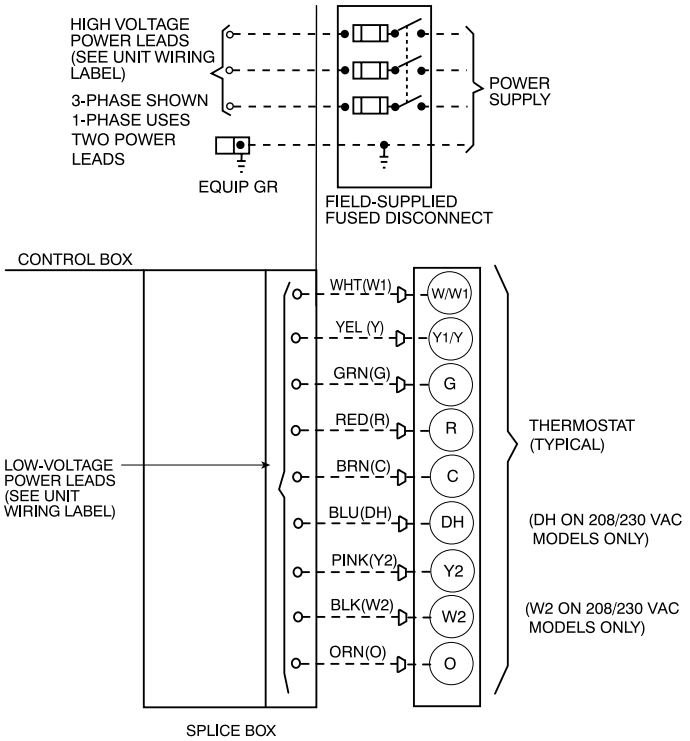


**Fig. 10 – High- and Control-Voltage Connections**

**IMPORTANT:** Dehumidification control must open control circuit on humidity rise above set point.

Use of the dehumidification cooling fan speed requires use of either a 24 VAC dehumidistat or a thermostat which includes control of a 24 VAC dehumidistat connection. In either case, the dehumidification control must open the control circuit on humidity rise above the dehumidification set point.

## Heat Anticipator Setting (Electro-Mechanical Thermostats only)

The room thermostat heat anticipator must be properly adjusted to ensure proper heating performance. Set the heat anticipator, using an ammeter between the W1 and R terminals to determine the exact required setting.

**NOTE:** For thermostat selection purposes, use 0.18 amp for the approximate required setting. Failure to make a proper heat anticipator adjustment will result in improper operation, discomfort to the occupants of the conditioned space, and inefficient energy utilization; however, the required setting may be changed slightly to provide a greater degree of comfort for a particular installation.

## Balance Point Setting-Thermidistat or Hybrid Thermostat

BALANCE POINT TEMPERATURE-The “balance point” temperature is a setting which affects the operation of the heating mode. This is a field-selected input temperature (range 5 to 55°F) (-15 to 12°C) where the Thermidistat or dual fuel thermostat will monitor outdoor air temperature and decide whether to enable or disable the heat pump. If the outdoor temperature is above the “balance point”, the heat pump will energize first to try to satisfy the indoor temperature demand. If the heat pump does not make a sufficient improvement within a reasonable time period (i.e. 15 minutes), then the gas furnace will come on to satisfy the indoor temperature demand. If the outdoor temperature is below the “balance point”, the heat pump will not be allowed to operate (i.e. locked out), and the gas furnace will be used to satisfy the indoor temperature. There are three separate concepts which are related to selecting the final “balance point” temperature. Read each of the following carefully to determine the best “balance point” in a hybrid installation:

1. Capacity Balance Temperature: This is a point where the heat pump cannot provide sufficient capacity to keep up with the indoor temperature demand because of declining outdoor temperature. At or below this point, the furnace is needed to maintain proper indoor temperature.
2. Economic Balance Temperature: Above this point, the heat pump is the most cost efficient to operate, and below this point the furnace is the most cost efficient to operate. This can be somewhat complicated to determine and it involves knowing the cost of gas and electricity, as well as the efficiency of the furnace and heat pump. For the most economical operation, the heat pump should operate above this temperature (assuming it has sufficient capacity) and the furnace should operate below this temperature.
3. Comfort Balance Temperature: When the heat pump is operating below this point, the indoor supply air feels uncomfortable (i.e. too cool). This is purely subjective and will depend on the homeowner's idea of comfort. Below this temperature the gas furnace should operate in order to satisfy the desire for indoor comfort.

### Transformer Protection

The transformer is of the energy-limiting type, however a direct short will likely blow a secondary fuse. If an overload or short is present, correct overload condition and check for blown fuse on Indoor Fan board or Integrated Gas Controller. Replace fuse as required with correct size and rating.

## Pre-Start-up

**⚠ WARNING**

**ENVIRONMENTAL, FIRE, EXPLOSION, ELECTRICAL SHOCK HAZARD**

Failure to follow this warning could result in personal injury or death.

1. Follow recognized safety practices and wear protective goggles when checking or servicing refrigerant system.
2. Do not operate compressor or provide any electric power to unit unless compressor plug is in place and secured.
3. Do not remove compressor plug until all electrical sources are disconnected and tagged.
4. Relieve and recover all refrigerant from system before touching or disturbing compressor plug if refrigerant leak is suspected around compressor terminals.
5. Never attempt to repair soldered connection while refrigerant system is under pressure.
6. Do not use torch to remove any component. System contains oil and refrigerant under pressure.
   To remove a component, wear protective goggles and proceed as follows:
   a. Shut off electrical power to unit and install lockout tag.
   b. Relieve and reclaim all refrigerant from system using both high- and low-pressure ports.
   c. Cut component connecting tubing with tubing cutter and remove component from unit.
   d. Carefully unsweat remaining tubing stubs when necessary. Oil can ignite when exposed to torch flame.

Use the Start-Up Checklist supplied at the end of this book and proceed as follows to inspect and prepare the unit for initial start-up:

1. Remove access panels (see Fig. 18).
2. Read and follow instructions on all DANGER, WARNING, CAUTION, and INFORMATION labels attached to, or shipped with unit.
3. Make the following inspections:
   a. Inspect for shipping and handling damage, such as broken lines, loose parts, disconnected wires, etc.
   b. Inspect all field- and factory-wiring connections. Be sure that connections are completed and tight.
   c. Ensure wires do not touch refrigerant tubing or sharp sheet metal edges.
   d. Inspect coil fins. If damaged during shipping and handling, carefully straighten fins with a fin comb.

**⚠ WARNING**

**FIRE, EXPLOSION HAZARD**

Failure to follow this warning could result in personal injury, death or property damage.

Do not purge gas supply into the combustion chamber. Do not use a match or other open flame to check for gas leaks.

Use a commercially available soap solution made specifically for the detection of leaks to check all connections. A fire or explosion may result causing property damage, personal injury or loss of life.

4. Verify the following conditions:
   a. Make sure gas line is free of air. Before lighting the unit for the first time, perform the following with the gas valve in the OFF position:

**NOTE:** If the gas supply pipe was not purged before connecting the unit, it will be full of air. It is recommended that the ground joint union be loosened, and the supply line be allowed to purge until the odor of gas is detected. Never purge gas lines into a combustion chamber. Immediately upon detection of gas odor, retighten the union. Allow 5 minutes to elapse, then light unit.

   b. Make sure that outdoor-fan blade is correctly positioned in the fan orifice.
   c. Make sure that air filter(s) is in place.
   d. Make sure that condensate drain trap is filled with water to ensure proper drainage.
   e. Make sure that all tools and miscellaneous loose parts have been removed.

## Start-up

**⚠ WARNING**

**FIRE, INJURY, OR DEATH HAZARD**

Failure to follow this warning could result in property damage, personal injury, or death.

Do not bypass any of the safety controls in the unit, including but not limited to the main limit switch, rollout or burner rollout switch, and pressure switch/pressure transducer.

### Step 1 – Check for Refrigerant Leaks

Proceed as follows to locate and repair a refrigerant leak and to charge the unit:

**⚠ WARNING**

**EXPLOSION HAZARD**

Failure to follow this warning could result in death, serious personal injury, and/or property damage.

Never use air or gases containing oxygen for leak testing or operating refrigerant compressors. Pressurized mixtures of air or gases containing oxygen can lead to an explosion.

1. Locate leak and make sure that refrigerant system pressure has been relieved and reclaimed from both high- and low-pressure ports.
2. Repair leak following accepted practices.

**NOTE:** Install a filter drier whenever the system has been opened for repair.

3. Add a small charge of Puron (R-410A) refrigerant vapor to system and leak-test unit.
4. Recover refrigerant from refrigerant system and evacuate to 500 microns if no additional leaks are found.
5. Charge unit with Puron (R-410A) refrigerant, using an accurate scale. Refer to unit rating plate for required charge.

## Step 2 – Start-up Gas Heating and Make Adjustments

Complete the required procedures given in the Pre-Start-Up section before starting the unit. Do not jumper any safety devices when operating the unit. Make sure that burner orifices are properly aligned. Unstable operation my occur when the burner orifices in the manifold are misaligned.

Follow the lighting instructions on the heating section operation label (located on the inside of the control access panel) to start the heating section.

**NOTE:** Make sure that gas supply has been purged, and that all gas piping has been checked for leaks.

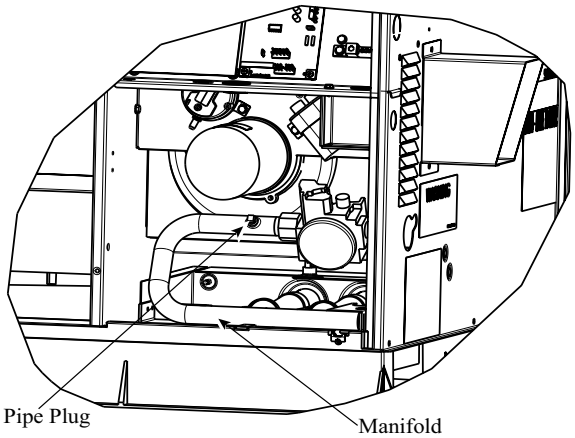


A07679

**Fig. 11 – Burner Assembly**

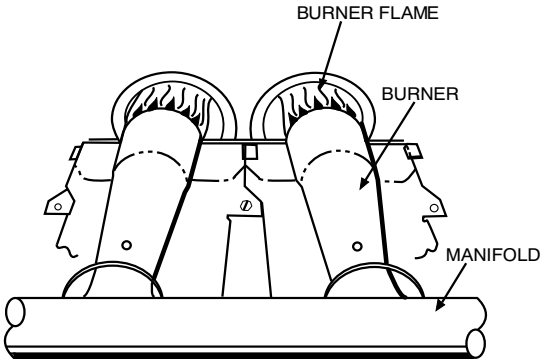


C99021

**Fig. 12 – Monoport Burner**

### Check Gas Heating Control

Start and check the unit for proper heating control operation as follows (see furnace lighting instructions located on the inside of the control access panel):

1. Place room thermostat SYSTEM switch in the GAS HEAT position and the fan switch in AUTO position.
2. Set the heating temperature control setting several degrees higher than the room temperature reading.
3. The induced-draft motor will always start on high speed for the ignition sequence, regardless of the heating stage called.
4. After a pre-purge time of 15 sec with the induced-draft motor on high speed, the sparker will be energized for 3-to-8 sec, and the gas valve will be energized on low stage. If the burners do not light, there is a 20-sec delay before another ignition attempt. If the burners still do not light by the 4th consecutive ignition attempt, there is a lockout. To reset the lockout, break the 24-v power to W1 and W2.
5. Once flame is established the integrated gas unit controller (IGC) will look for 24-v power to W1 and W2. If there is 24-v power to W1 only, the IGC will switch the induced-draft motor down to low speed and maintain low stage on the gas valve. If there is 24-v power to both W1 and W2, the IGC will maintain the induced-draft motor on high speed and switch the gas valve to high stage.
6. With the desired temperature set several degrees higher than the room temperature, most thermostats will energize low and high stage. Verify that the gas valve is energized on high stage and the induced-draft motor is on high speed.
7. Verify proper operation of low stage (induced-draft motor on low speed and gas valve on high stage) by turning the heating temperature control setting down until the desired temperature is 1 degree above room temperature. Most thermostats will energize low stage only with a 1 degree differential.
8. The evaporator fan will turn on 30 sec after the flame has been established. If there is 24-v power to W1 only, the fan will run on low heat speed. If there is 24-v power to W1 and W2, the fan will run on high heat speed. Once the heating coll is satisfied, the IGC will turn the fan off after a field-selectable fan delay of 90, 120, 150, or 180 sec is completed.

### Check Gas Input

Check gas input and manifold pressure after unit start-up (See Table 5). If adjustment is required proceed as follows:

- The rated gas inputs shown in Table 5 is for altitudes from sea level to 2000 ft (610 m) above sea level. These inputs are based on natural gas with a heating value of 1025 Btu/ft$^3$ at 0.60 specific gravity, or propane gas with a heating value of 2500 Btu/ft$^3$ at 1.5 specific gravity.

IN THE U.S.A.:

The input rating for altitudes above 2,000 ft (610 m) must be reduced by 4% for each 1,000 ft (305 m) above see level.

For installations below 2,000 ft (610 m), refer to the unit rating plate.

For installations above 2,000 ft (610 m). multiply the input on the rating plate by the derate multiplier in Table 3 for correct input rate. If the natural gas is not de-rated by the utility company refer to Table 4 for correct orifice sizes and manifold pressures.

**Table 3 – Altitude Derate Multiplier for U.S.A.***

| Altitude ft (m) | Percent of Derate | Derate Multiplier Factor† |
|---|---|---|
| 0-2000 (0-610) | 0 | 1.00 |
| 2001-3000* (610-914) | 8-12 | 0.90 |
| 3001-4000 (915-1219) | 12-16 | 0.86 |
| 4001-5000 (1220-1524) | 16-20 | 0.82 |
| 5001-6000 (1524 -1829) | 20-24 | 0.78 |
| 6001-7000 (1829-2134) | 24-28 | 0.74 |
| 7001-8000 (2134-2438) | 28-32 | 0.70 |
| 8001-9000 (2439-2743) | 32-36 | 0.66 |
| 9001-10,000 (2744-3048) | 36-40 | 0.62 |

*. In Canada see Canadian Altitude Adjustment.
†. Derate multiplier factors are based on midpoint altitude for altitude range.

IN CANADA:

The input rating for altitudes from 2,000 (610 m) to 4,500 ft (1372 m) above sea level must be derated 10% by an authorized Gas Conversion Station or Dealer.

EXAMPLE:

90,000 Btu/hr Input Furnace Installed at 4300 ft.

| Furnace Input Rate at Sea Level | X | Derate Multiplier Factor | = | Furnace Input Rate at Installation Altitude |
|---|---|---|---|---|
| 90,000 | X | 0.90 | = | 81,000 |

When the gas supply being used has a different heating value or specific gravity, refer to national and local codes, or contact your distributor to determine the required orifice size.

**⚠ CAUTION**

**UNIT DAMAGE HAZARD**

Failure to follow this caution may result in reduced unit and/or component life.

Do Not redrill an orifice. Improper drilling (burrs, out-of-round holes, etc.) can cause excessive burner noise and misdirection of burner flame. If orifice hole appears damaged or it is suspected to have been redrilled, check orifice hole with a numbered drill bit of correct size.

## Adjust Gas Input

The gas input to the unit is determined by measuring the gas flow at the meter or by measuring the manifold pressure. Measuring the gas flow at the meter is recommended for natural gas units. The manifold pressure must be measured to determine the input of propane gas units.

Measure Gas Flow (Natural Gas Units)

Minor adjustment to the gas flow can be made by changing the manifold pressure(s). The manifold pressure(s) must be maintained between 3.2 and 3.8 IN. W.C. for high stage and between 1.4 and 2.0 IN. W.C. for low stage (208/230 VAC models). For 460 VAC models, manifold pressure must be maintained between 3.2 and 3.8 IN. W.C.

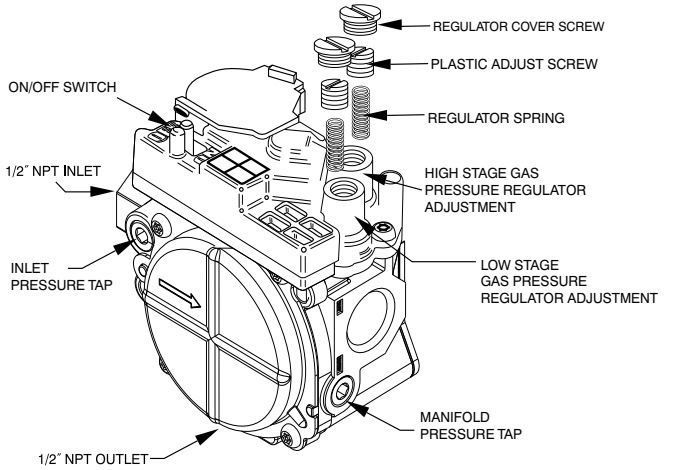


**Fig. 13 – Two-Stage Gas Valve (208/230 VAC Models)**

If larger adjustments are required, change main burner orifices following the recommendations of national and local codes.

**NOTE:** All other appliances that use the same meter must be turned off when gas flow is measured at the meter.

Proceed as follows:

1. Turn off gas supply to unit.
2. Remove pipe plug on manifold (See Fig. 11) and connect manometer. Turn on gas supply to unit.
3. Record number of seconds for gas meter test dial to make one revolution.
4. Divide number of seconds in Step 3 into 3600 (number of seconds in one hr).
5. Multiply result of Step 4 by the number of cubic feet (cu ft) shown for one revolution of test dial to obtain cubic feet (cu ft) of gas flow per hour.
6. Multiply result of Step 5 by Btu heating value of gas to obtain total measured input in Btuh. Compare this value with heating input shown in Table 5 (Consult the local gas supplier if the heating value of gas is not known).

EXAMPLE: Assume that the size of test dial is 1 cu ft, one revolution takes 32 sec and the heating value of the gas is 1050 Btu/$ft^{3.}$ Proceed as follows:

1. 32 sec to complete one revolution.
2. 3600 ÷ 32 = 112.5.
3. 112.5 x 1 =112.5 $ft^3$ of gas flow/hr.
4. 112.5 x 1050 = 118,125 Btuh input.

If the desired gas input is 115,000 Btuh, only a minor change in the manifold pressure is required.

Observe manifold pressure(s) and proceed as follows to adjust gas input(s):

1. Remove regulator cover screw(s) over plastic adjustment screw(s) on gas valve (see Fig. 13).
2. Turn the high stage plastic adjustment screw clockwise to increase gas input and counterclockwise to decrease input (see Fig. 13). Manifold pressure must be between 3.2 and 3.8 IN. W.C. for high stage.
3. Replace high stage regulator cover screw on gas valve (see Fig. 13).
4. Turn the low stage plastic adjustment screw clockwise to increase gas input and counterclockwise to decrease input (see Fig. 13). Low stage manifold pressure must be between 1.4 and 2.0 IN. W.C.

**NOTE:** Low stage manifold pressure must be adjusted after high stage manifold pressure is already adjusted.

5. Replace low stage regulator cover screw(s) on gas valve (see Fig. 13).
6. Turn off gas supply to unit. Remove manometer from pressure tap and replace pipe plug on manifold (see Fig. 11). Turn on gas and check for leaks

**WARNING**

**FIRE AND UNIT DAMAGE HAZARD**

Failure to follow this warning could result in personal injury or death and/or property damage.

Unsafe operation of the unit may result if manifold pressure is outside this range.

**Measure Manifold Pressure (Propane Units)**

Refer to propane kit installation instructions for properly checking gas input.

**NOTE:** For installations below 2,000 ft (610 m), refer to the unit rating plate for proper propane conversion kit. For installations above 2,000 ft (610 m), contact your distributor for proper propane conversion kit.

## Check Burner Flame

With control access panel (see Fig. 18) removed, observe the unit heating operation. Watch the burner flames to see if they are light blue and soft in appearance, and that the flames are approximately the same for each burner. Propane will have blue flame (See Fig. 12). Refer to the Maintenance section for information on burner removal.

**Table 4 – \Natural Gas Orifice Sizes and Manifold Pressure**
**208/230VAC Models**

| Nameplate Input, High Stage (Btu/hr) | | ALTITUDE OF INSTALLATION (FT. [m] ABOVE SEA LEVEL) U.S.A.* | | | | |
|---|---|---|---|---|---|---|
| | | 0 to 2000 [0 to 610] | 2001 to 3000* [610 to 914] | 3001 to 4000 [915 to 1219] | 4001 to 5000 [1220 to 1524] | 5001 to 6000 [1524 to 1829] |
| 40000 | Orifice No. (Qty) | 44 (2) | 45 (2)† | 48 (2)† | 48 (2)† | 48 (2)† |
| | Manifold Press. High / Low (in. W.C.) | 3.2 /1.4 | 3.2 /1.4 | 3.8 /1.6 | 3.5 /1.5 | 3.2 /1.4 |
| 60000 | Orifice No. (Qty) | 44 (3) | 45 (3)† | 48 (3)† | 48 (3)† | 48 (3)† |
| | Manifold Press. High / Low (in. W.C.) | 3.2 /1.4 | 3.2 /1.4 | 3.8 /1.6 | 3.5 /1.5 | 3.2 /1.4 |
| 90000 | Orifice No. (Qty) | 38 (3) | 41 (3)† | 41 (3)† | 42 (3)† | 42 (3)† |
| | Manifold Press. High / Low (in. W.C.) | 3.6 /1.6 | 3.8 /1.6 | 3.4 /1.5 | 3.4 /1.5 | 3.2 /1.4 |
| 115000 | Orifice No. (Qty) | 33 (3) | 36 (3)† | 36 (3)† | 36 (3)† | 38 (3)† |
| | Manifold Press. High / Low (in. W.C.) | 3.8 /1.7 | 3.8 /1.7 | 3.6 /1.6 | 3.3 /1.4 | 3.6 /1.5 |
| 127000 | Orifice No. (Qty) | 31 (3) | 31 (3) | 33 (3)† | 33 (3)† | 34 (3)† |
| | Manifold Press. High / Low (in. W.C.) | 3.7 /1.7 | 3.2 /1.4 | 3.5 /1.6 | 3.2 /1.4 | 3.2 /1.4 |

*. In the U.S.A., the input rating for altitudes above 2000 ft (610m) must be reduced by 4% for each 1000 ft (305 m) above sea level.
In Canada, the input rating for altitudes from 2001 to 4500 ft (611 to 1372 m) above sea level must be derated by 10% by an authorized gas conversion station or dealer.
For Canadian Installations from 2000 to 4500 ft, use U.S.A. column 2001 to 3000 ft (610 to 914 m).

†. Orifices available through your distributor.

NOTE: Orifice sizes and manifold pressure settings are based on natural gas with a heating value of 1025 Btu/ft$^3$ and a specific gravity of .6.

**Table 5 – Heating Inputs 208/230 VAC Models**

| HEATING INPUT (BTUH) | NUMBER OF ORIFICES | GAS SUPPLY PRESSURE (IN. W.C.) | | | | MANIFOLD PRESSURE (IN. W.C.) | |
|---|---|---|---|---|---|---|---|
| | | Natural* | | Propane*† | | | |
| | | Min | Max | Min | Max | Natural{ | Propane*† |
| 40,000 | 2 | 4.0 | 13.0 | 11.0 | 13.0 | 3.2~3.8 | 10.0~11.0 |
| 60,000 | 2 | 4.0 | 13.0 | 11.0 | 13.0 | 3.2~3.8 | 10.0~11.0 |
| 90,000 | 3 | 4.0 | 13.0 | 11.0 | 13.0 | 3.2~3.8 | 10.0~11.0 |
| 115,000 | 3 | 4.0 | 13.0 | 11.0 | 13.0 | 3.2~3.8 | 10.0~11.0 |
| 127,000 | 3 | 4.0 | 13.0 | 11.0 | 13.0 | 3.2~3.8 | 10.0~11.0 |

*. Based on altitudes from sea level to 2000 ft (610 m) above sea level. In U.S.A. for altitudes above 2000 ft (610 m), reduce input rating 4 percent for each additional 1000 ft (305 m) above sea level. In Canada, from 2000 ft (610 m) above sea level to 4500 ft (1372 m) above sea level, derate the unit 10 percent.

†. When a unit is converted to propane, different size orifices must be used. See separate, natural-to-propane conversion kit instructions.

## CONNECTION WIRING DIAGRAM
## DANGER: ELECTRICAL SHOCK HAZARD DISCONNECT POWER BEFORE SERVICING

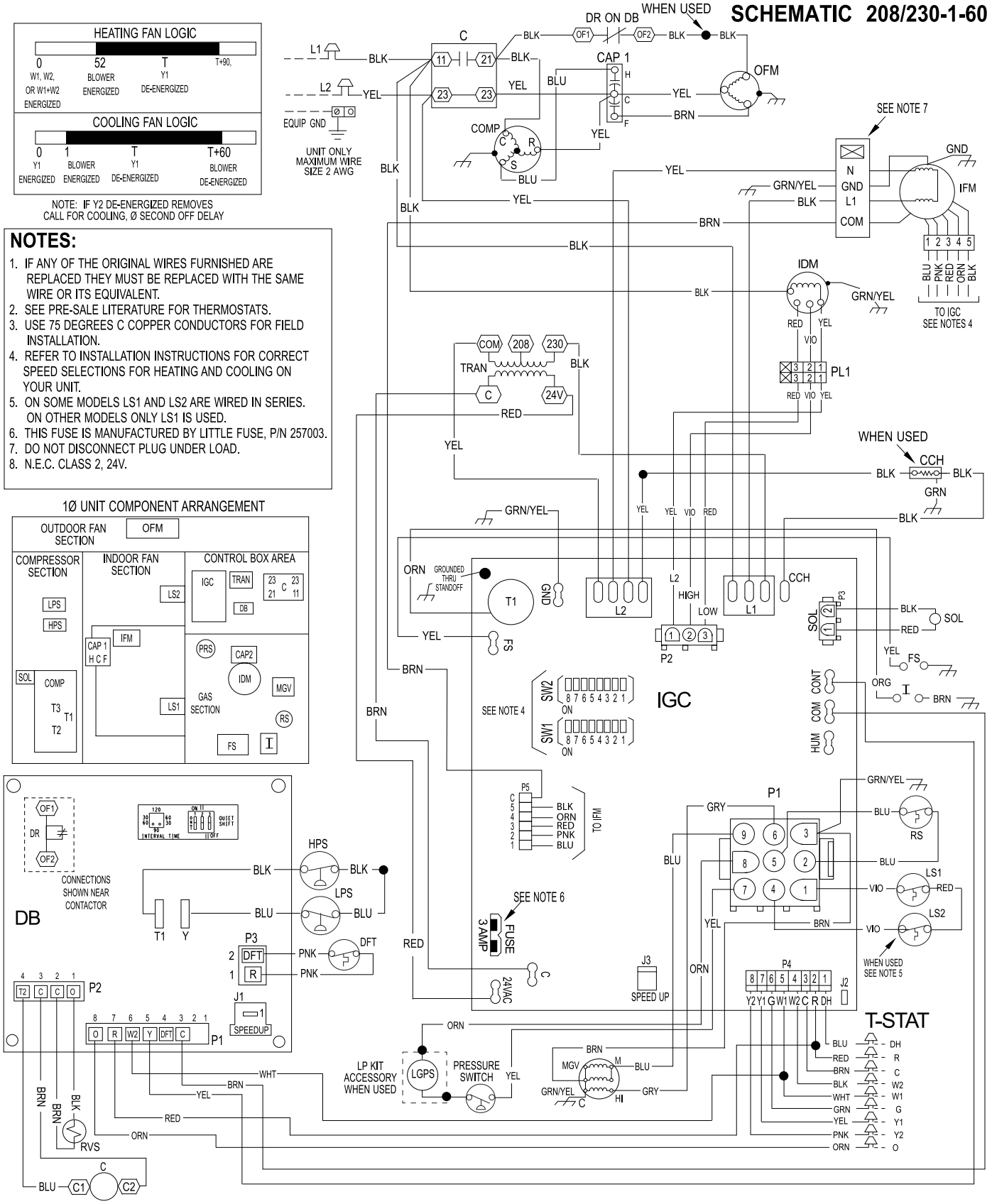


**Fig. 14 – 208/230-1-60 Connection Wiring Diagram**

## LADDER WIRING DIAGRAM
## DANGER: ELECTRICAL SHOCK HAZARD DISCONNECT POWER BEFORE SERVICING

### LEGEND

| | | | |
|---|---|---|---|
| | FIELD SPLICE | EQUIP | EQUIPMENT |
| | TERMINAL (MARKED) | FS | FLAME SENSOR |
| | TERMINAL (UNMARKED) | GND | GROUND |
| | SPLICE | HPS | HIGH PRESSURE SWITCH |
| | SPLICE (MARKED) | I | IGNITOR |
| | FACTORY LO VOLTAGE | IDM | INDUCED DRAFT MOTOR |
| | FIELD CONTROL WIRING | IFM | INDOOR FAN MOTOR |
| | FIELD POWER WIRING | IGC | INTERGRATED GAS UNIT CONTROLLER |
| | ACCESSORY OR OPTIONAL WIRING | LGPS | LOW GAS PRESSURE SWITCH (WHEN USED) |
| | FACTORY HI VOLTAGE | LPS | LOW PRESSURE SWITCH |
| C | CONTACTOR | LS1 | PRIMARY LIMIT SWITCH |
| CAP1 | CAPACITOR, COMP | LS2 | SECONDARY LIMIT SWITCH |
| CAP2 | CAPACITOR, INDUCER | MGV | MAIN GAS VALVE |
| CCH | CRANKCASE HEATER | OFM | OUTDOOR FAN MOTOR |
| COMP | COMPRESSOR MOTOR | OT | QUADRUPLE TERMINAL |
| DB | DEFROST BOARD | PL1 | IGC TO INDUCER MOTOR PLUG |
| DR | DEFROST BOARD RELAY | PL2 | INDUCER MOTOR PLUG |
| DFT | DEFROST TEMPERATURE SWITCH | RS | ROLLOUT SWITCH |
| | | RVS | REVERSING VALVE |
| | | SOL | COMPRESSOR SOLENOID |
| | | TRAN | TRANSFORMER |
| | | T-STAT | THERMOSTAT |

DEFROST TIMING SELECTION

FIELD SELECTABLE OPTIONS FOR TIME PERIOD BETWEEN DEFROST CYCLES (MINUTES) FACTORY DEFROST SETTING IS 60 MIN.

SPEED UP — JUMPERED TEST PINS (USE METAL OBJECT) FIELD SPEED-UP CYCLE

1. DFT MUST BE CLOSED TO INITIATE DEFROST CYCLE. IF NECESSARY, REMOVE DFT CONNECTION BEFORE PLACING JUMPER ACCROSS DFT PINS.
2. AT THE SAME TIME DFT CLOSED, JUMPER "SPEED UP" PINS WITH SMALL SCREW DRIVER UNTIL DEFROST IS INITITATED. THEN REMOVE SCREW DRIVER.
3. SHORTED "SPEED UP" PINS WILL SPEED UP TIMER BY A FACTOR OF 256.

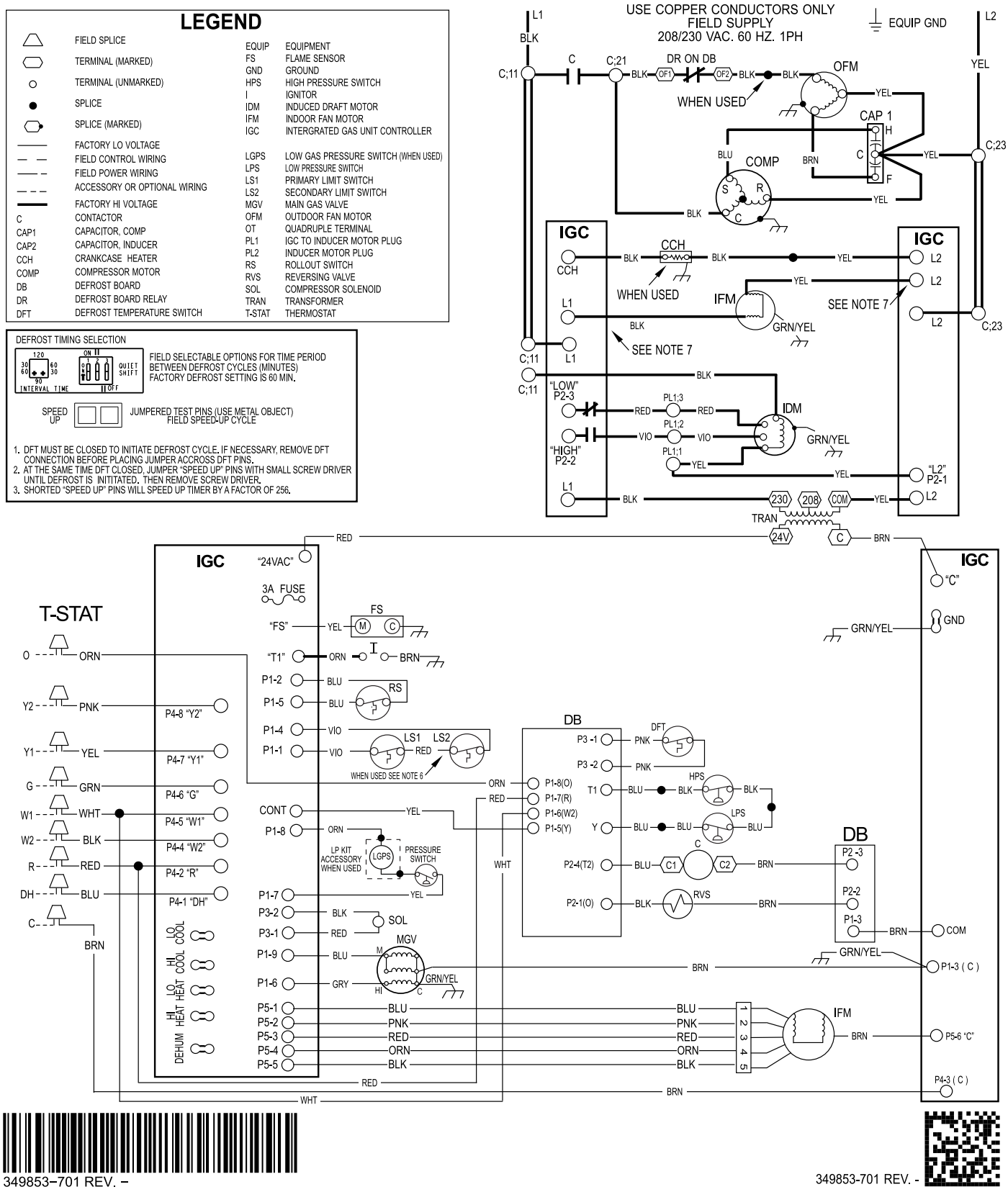


A230226

**Fig. 15 – 208/230-1-60 Ladder Wiring Diagram**

## Normal Operation

An LED (light-emitting diode) indicator is provided on the integrated gas unit controller (IGC) to monitor operation. The IGC is located by removing the control access panel (see Fig. 18). During normal operation, the LED is continuously on (See Table 6 for error codes).

## Airflow and Temperature Rise

The heating section for each size unit is designed and approved for heating operation within the temperature-rise range(s) stamped on the unit rating plate.

Table 9 show the approved temperature rise range for each heating input and stage, and the air delivery cfm at various temperature rises for a given external static pressure. The heating operation airflow must produce a temperature rise that falls within the approved range for each heating stage. For single phase units only, "High" blower speed is for high static, high stage cooling only and must not be used for either gas heating speed.

Refer to Indoor Airflow and Airflow Adjustments section to adjust heating airflow when required.

## Gas Heating Sequence of Operation

(See Fig. 14 - Fig. 15 and unit wiring label.)

On a call for low stage heating, terminal W1 on the thermostat is energized. On a call for high stage heating both terminals W1 and W2 are energized. Regardless of the stage of the heating call, the induced-draft motor is turned on to high speed for a 15 sec pre-purge time. After the pre-purge, when the pressure switch senses that sufficient combustion air is being moved by the induced-draft motor, the ignition sequence begins. The IGC will energize the sparker and the low stage gas valve solenoid. Upon sensing flame, the IGC will check the heating call. If W2 is not energized, the IGC will drop the induced-draft motor to low speed and maintain the gas valve on low stage. If W2 is energized, the IGC will maintain the induced-draft motor on high speed and energize the high stage gas valve solenoid. Thirty sec after flame is sensed the IGC will turn on the evaporator fan motor. If W2 is not energized, the evaporator fan motor will run on low heat speed. If W2 is energized, the evaporator fan motor will run on high heat speed. After the call for heat is satisfied, the IGC will run the evaporator fan motor an additional 90 sec. Please note that the IGC has the capability to automatically reduce the indoor fan motor on delay and increase the fan motor off delay in the event of high duct static and/or a partially-clogged filter.

## Limit Switches

Normally closed limit switch(es) (LS) complete the control circuit. Should the leaving-air temperature rise above the maximum allowable temperature, the limit switch opens and the control circuit "breaks." Any interruption in the control circuit instantly closes the gas valve and stops gas flow to the burners. The blower motor continues to run until LS resets.

When the air temperature at the limit switch drops to the low-temperature setting of the limit switch, the switch closes and completes the control circuit. The direct-spark ignition system cycles and the unit returns to normal heating operation.

**Table 6 – LED Indications**

| STATUS CODE | LED INDICATION |
|---|---|
| Normal Operation* | On |
| No Power or Hardware Failure | Off |
| Check Fuse, Low Voltage Circuit | 1 Flash |
| Limit Switch Fault | 2 Flashes |
| Flame Sense Fault | 3 Flashes |
| Four Consecutive Limit Switch Faults | 4 Flashes |
| Ignition Lockout Fault | 5 Flashes |
| Pressure Switch Fault | 6 Flashes |
| Rollout Switch Fault | 7 Flashes |
| Internal Control Fault | 8 Flashes |
| Temporary 1 hr auto reset† | 9 Flashes |

*. LED indicates acceptable operation. Do not change ignition control board.

†. This code indicates an internal processor fault that will reset itself in one hr. Fault can be caused by stray RF signals in the structure or nearby. This is a UL requirement.

NOTES:
1. When W is energized the burners will remain on for a minimum of 60 sec.
2. If more than one error code exists they will be displayed on the LED in sequence.

## Rollout Switch

The function of the rollout switch is to close the main gas valve in the event of flame rollout. The switch is located above the main burners. When the temperature at the rollout switch reaches the maximum allowable temperature, the control circuit trips, closing the gas valve and stopping gas flow to the burners. The indoor (evaporator) fan motor (IFM) and induced draft motor continue to run until switch is reset. The IGC LED will display FAULT CODE 7.

# Step 3 – Start-up Cooling and Make Adjustments

Complete the required procedures given in the Pre-Start-Up section before starting the unit. Do not jumper any safety devices when operating the unit. Do not operate the compressor when the outdoor temperature is below 40°F (4.4°C) (unless accessory low-ambient kit is installed). Do not rapid-cycle the compressor. Allow 5 minutes between on cycles to prevent compressor damage.

## Checking Cooling Control Operation

Start and check the unit for proper control operation as follows:

1. Place room thermostat SYSTEM switch or MODE control in OFF position. Observe that blower motor starts when FAN mode is placed in FAN ON position and shuts down when FAN MODE switch is placed in AUTO position.
2. Thermostat:
   On a typical two stage thermostat, when the room temperature rises 1 or 2 degrees above the cooling control setting of the thermostat, the thermostat completes the circuit between thermostat terminal R and terminals Y1, O and G. These completed circuits through the thermostat connect the contactor coil (C) (through unit wire Y1) and indoor fan board (through unit wire G) across the 24-v. secondary of transformer (TRAN).
   On a typical two stage thermostat, when the room temperature is several degrees above the cooling control setting of the thermostat, the thermostat completes the circuit between terminal R and terminals Y1, Y2, O and G.
3. When using an automatic changeover room thermostat place both SYSTEM or MODE control and FAN mode stitches in AUTO positions. Observe that unit operates in Cooling mode when temperature control is set to "call for Cooling" (below room temperature).

**NOTE:** Once the compressor has started and then has stopped, it should not be started again until 5 minutes have elapsed.

## Checking and Adjusting Refrigerant Charge

The refrigerant system is fully charged with Puron (R-410A) refrigerant and is tested and factory sealed. Allow system to operate a minimum of 15 minutes before checking or adjusting charge.

**NOTE:** Adjustment of the refrigerant charge is not required unless the unit is suspected of not having the proper Puron (R-410A) charge.

A subcooling chart is attached to the inside of the compressor access panel. (See Table 8 and Fig. 18.) The chart includes the required liquid line temperature at given discharge line pressures and outdoor ambient temperatures for high stage cooling.

An accurate thermocouple- or thermistor-type thermometer, and a gauge manifold are required when using the subcooling charging method for evaluating the unit charge. Do not use mercury or small dial-type thermometers because they are not adequate for this type of measurement.

**⚠ CAUTION**

**UNIT DAMAGE HAZARD**

Failure to follow this caution may result in unit damage.

When evaluating the refrigerant charge, an indicated adjustment to the specified factory charge must always be very minimal. If a substantial adjustment is indicated, an abnormal condition exists somewhere in the cooling system, such as insufficient airflow across either coil or both coils.

**IMPORTANT:** When evaluating the refrigerant charge, an indicated adjustment to the specified factory charge must always be very minimal. If a substantial adjustment is indicated, an abnormal condition exists somewhere in the cooling system, such as insufficient airflow across either coil or both coils.

Proceed as follows:

1. Remove caps from low- and high-pressure service fittings.
2. Using hoses with valve core depressors, attach low- and high-pressure gauge hoses to low- and high-pressure service fittings, respectively.
3. Start unit in high stage cooling mode and let unit run until system pressures stabilize.
4. Measure and record the following:
   a. Outdoor ambient-air temperature (°F [°C] db).
   b. Liquid line temperature (°F [°C]).
   c. Discharge (high-side) pressure (psig).
   d. Suction (low-side) pressure (psig) (for reference only).
5. Using "Subcooling Charging Charts," compare outdoor-air temperature(°F [°C] db) with the discharge line pressure (psig) to determine desired system operating liquid line temperature (See Table 8).
6. Compare actual liquid line temperature with desired liquid line temperature. Using a tolerance of ± 2°F (±1.1°C), add refrigerant if actual temperature is more than 2°F (1.1°C) higher than proper liquid line temperature, or remove refrigerant if actual temperature is more than 2°F (1.1°C) lower than required liquid line temperature.

**NOTE:** If the problem causing the inaccurate readings is a refrigerant leak, refer to the Check for Refrigerant Leaks section.

## Indoor Airflow and Airflow Adjustments

**⚠ CAUTION**

**UNIT OPERATION HAZARD**

Failure to follow this caution may result in unit damage.

For cooling operation, the recommended airflow is 350 to 450 cfm for each 12,000 Btuh of rated cooling capacity. For heating operation, the airflow must produce a temperature rise that falls within the range stamped on the unit rating plate.

**NOTE:** Be sure that all supply-and return-air grilles are open, free from obstructions, and adjusted properly.

**⚠ CAUTION**

**ELECTRICAL SHOCK HAZARD**

Failure to follow this warning could result in personal injury or death. Disconnect electrical power to the unit and install lockout tag before changing blower speed(s).

This unit has independent fan speeds for low stage cooling and high stage cooling. In addition, units have the field-selectable capability to run enhanced dehumidification ('DHUM') speeds on high stage cooling and low stage cooling (as low as 320CFM per ton). Coupled with the improved dehumidification associated with low stage cooling, the DHUM speed allows for a complete dehumidification solution independent of cooling stage. Units also have independent fan speeds for low stage gas heating and high stage gas heating. Table 7 shows the operation modes and the associated fan speeds with each mode:

**Table 7 – Operation Modes and Fan Speeds**
**208/230 VAC Models**

| OPERATION MODE | DIP SWITCH BANKS |
|---|---|
| Low Stage Gas Heating | LH |
| High Stage Gas Heating | HH |
| Low Stage Cooling/Heat Pump | LC |
| High Stage Cooling/Heat Pump | HC |
| Low Stage Enhanced Dehumidification Cooling | DHL |
| High Stage Enhanced Dehumidification Cooling | DHH |
| Continuous Fan | CF |
| High Static Cooling | HSC |

The evaporator fan motor is factory set to provide 5 different fan speeds to choose from for the various operation modes.

**Selection of Proper Fan Speeds for Operation Modes:**

**NOTE:** All models are factory-shipped for nominal high stage and low stage cooling airflow operation at minimum external static pressure. Many models are factory-shipped for nominal high stage and/or low stage gas heating airflow at minimum external static pressure. Table 9 provide airflow data for higher external static pressures.

**Gas Heating:** Table 9 show the suitability of each speed for a given external static pressure for high stage gas heating. Any speed/static combination that is outside the rise range is marked "NA" and must not be used. For single phase units only, "High" blower speed is for high static, high stage cooling only and must not be used for high stage gas heating speed. The unit must operate within the high stage gas heat rise range printed on the rating plate.

**Low Stage Cooling:** Using Table 10 - Table 12 and the nominal airflow for low stage cooling (Table 10) find the external static pressure drops for wet coil, economizer, and filter, and add them to dry coil measured on the system. Using this total static pressure, use Table 9 to find the

airflows available at the total static pressure. Connect the chosen fan speed wire to "LO COOL" connection on the IGC Board (see Fig. 16).

**High Stage Cooling:** Using Table 9 find the external static pressure drops for wet coil, economizer, and filter, and add them to dry coil measured on the system. Using this total static pressure, use Table 9 to find the airflows available at the total static pressure. The speed chosen must provide airflow of between 350 to 450 CFM per ton of cooling. Connect the chosen fan speed wire to "HI COOL" connection on the IGC Board (See Fig. 16).

**Enhanced Dehumidification Cooling**: Using the total static pressure for selecting the high stage cooling speed, use Table 9 to find lower speed/airflows available at that total static pressure. All airflows not shaded in Table 9 are acceptable for Dehum speed. The speed chosen must provide airflow of between 320 CFM per ton of cooling and rated airflow. Set dip switches according to speed desired. Repeat for low stage cooling.

To activate the enhanced dehumidification cooling mode, the shunt jumper in Fig. 15 must be moved from the No DH to DH selection.

**Continuous Fan (All models):** Refer to Table 9 for acceptable taps available for Continuous Fan Operation.

For 208/230 VAC models, the evaporator fan motor is factory set to provide 9 different fan speeds to choose from for the various operation modes.

## Cooling Sequence of Operation

a. Continuous Fan
   (1.) Thermostat closes circuit R to G energizing the blower motor for continuous fan. The indoor fan is energized on low speed.

b. Cooling Mode
   (1.) Low Stage: Thermostat closes R to G, R to Y1 and R to O. The compressor and indoor fan are energized on low speed. The outdoor fan is also energized.
   (2.) High Stage: Thermostat closes R to G, R to Y1, R to Y2 and R to O. The compressor and indoor fan are energized on high speed. The outdoor fan is also energized.

c. Heat Pump Mode
   (1.) Low Stage: Thermostat closes R to G, R to Y1. The compressor and indoor fan are energized on low speed. The outdoor fan is also energized.
   (2.) High Stage: Thermostat closes R to G, R to Y1, R to Y2. The compressor and indoor fan are energized on high speed. The outdoor fan is also energized.

d. Defrost Mode
   (1.) Outdoor Fan is disabled, thermostat closes R to O and R to W1. Low stage gas heat tempers the leaving air. When defrost is complete, unit will return to heating mode. If room thermostat is satisfied during defrost, unit will shut down and restart in defrost on next call for heat.

# Step 4 – Defrost Control

## Demand Defrost Mode

The defrost mode is factory set to an initial 60-minute time interval. It may also be adjusted to an initial interval of 30, 90, or 120 minutes. During operation, the control optimizes current defrost time based on the previous defrost interval and previous defrost period. If the previous defrost period is less than 2 minutes for two consecutive defrost cycles the control will lengthen the defrost interval by 15 minutes, up to a maximum of 120 minutes or 30 minutes greater than the original setpoint, whichever comes first. If the previous defrost period is more than 5 minutes for two consecutive defrost cycles the control will shorten the defrost interval by 15 minutes, down to a minimum of 30 minutes or 30 minutes from the original setpoint, whichever is first. After the defrost condition is satisfied, or after a maximum of 10 minutes in defrost mode, the unit will resume normal heating operation.

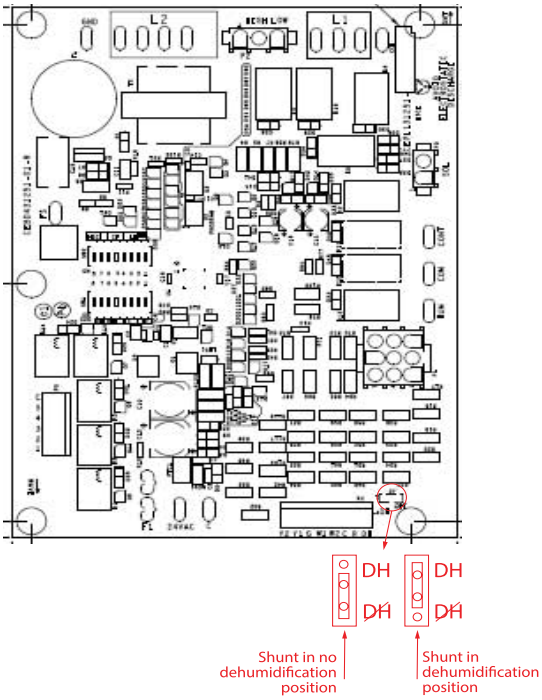


A230243

**Fig. 16 – IGC Board 208/230 VAC Models**

## Table 8 – Subcooling Charging Chart

**Required Subcooling °F(°C) (High Stage Cooling)**

| Model Size | Outdoor Ambient Temperature °F(°C) | | | | |
|---|---|---|---|---|---|
| | 75 (24) | 85 (29) | 95 (35) | 105 (41) | 115 (46) |
| 24 | 12 (6.7) | 12 (6.7) | 12 (6.7) | 12(6.7) | 12 (6.7) |
| 36 | 16 (8.9) | 16 (8.9) | 16 (8.9) | 16 (8.9) | 16 (8.9) |
| 48 | 15 (8.3) | 15 (8.3) | 14 (7.8) | 14 (7.8) | 13 (7.2) |
| 60 | 16 (8.9) | 15 (8.3) | 15 (8.3) | 14 (7.8) | 14 (7.8) |
| | | | | | |
| | | | | | |
| | | | | | |

**Notes:**

1- Subcooling values calculated using High Stage.

2- System is factory-charged to provide proper subcooling performance. If system is opened or if performance issues are suspected, then subcooling must be checked

**Charging Procedure:**

1- Measure Discharge line pressure by attaching a gauge to the service port.

2- Measure the Liquid line temperature by attaching a temperature sensing device to it.

3- Insulate the temperature sensing device so that the Outdoor Ambient doesn't affect the reading.

4- Refer to the required Subcooling in the table based on the model size and the Outdoor Ambient temperature.

5- Interpolate if the Outdoor ambient temperature lies in between the table values.

6- Find the Pressure Value in the table corresponding to the the measured Pressure of the Compressor Discharge line.

7- Read across from the Pressure reading to obtain the Liquid line temperature for a required Subcooling

8- Add Charge if the measured temperature is higher than the table value.

9 - Remove charge if the measured temperature is lower than the table value.

350063−701 REV.−

**Required Liquid Line Temperature for a Specific Subcooling (R-410A)**

| Pressure (psig) | Required Subcooling (°F) 5 | 10 | 15 | 20 | 25 |
|---|---|---|---|---|---|
| 189 | 61 | 56 | 51 | 46 | 41 |
| 196 | 63 | 58 | 53 | 48 | 43 |
| 203 | 66 | 61 | 56 | 51 | 46 |
| 210 | 68 | 63 | 58 | 53 | 48 |
| 217 | 70 | 65 | 60 | 55 | 50 |
| 224 | 72 | 67 | 62 | 57 | 52 |
| 231 | 74 | 69 | 64 | 59 | 54 |
| 238 | 76 | 71 | 66 | 61 | 56 |
| 245 | 77 | 72 | 67 | 62 | 57 |
| 252 | 79 | 74 | 69 | 64 | 59 |
| 260 | 81 | 76 | 71 | 66 | 61 |
| 268 | 83 | 78 | 73 | 68 | 63 |
| 276 | 85 | 80 | 75 | 70 | 65 |
| 284 | 87 | 82 | 77 | 72 | 67 |
| 292 | 89 | 84 | 79 | 74 | 69 |
| 300 | 91 | 86 | 81 | 76 | 71 |
| 309 | 93 | 88 | 83 | 78 | 73 |
| 318 | 95 | 90 | 85 | 80 | 75 |
| 327 | 97 | 92 | 87 | 82 | 77 |
| 336 | 99 | 94 | 89 | 84 | 79 |
| 345 | 101 | 96 | 91 | 86 | 81 |
| 354 | 103 | 98 | 93 | 88 | 83 |
| 364 | 105 | 100 | 95 | 90 | 85 |
| 374 | 107 | 102 | 97 | 92 | 87 |
| 384 | 108 | 103 | 98 | 93 | 88 |
| 394 | 110 | 105 | 100 | 95 | 90 |
| 404 | 112 | 107 | 102 | 97 | 92 |
| 414 | 114 | 109 | 104 | 99 | 94 |
| 424 | 116 | 111 | 106 | 101 | 96 |
| 434 | 118 | 113 | 108 | 103 | 98 |
| 444 | 119 | 114 | 109 | 104 | 99 |
| 454 | 121 | 116 | 111 | 106 | 101 |
| 464 | 123 | 118 | 113 | 108 | 103 |
| 474 | 124 | 119 | 114 | 109 | 104 |
| 484 | 126 | 121 | 116 | 111 | 106 |
| 494 | 127 | 122 | 117 | 112 | 107 |
| 504 | 129 | 124 | 119 | 114 | 109 |
| 514 | 131 | 126 | 121 | 116 | 111 |
| 524 | 132 | 127 | 122 | 117 | 112 |
| 534 | 134 | 129 | 124 | 119 | 114 |

| Pressure (kPa) | Required Subcooling (°C) 3 | 6 | 8 | 11 | 14 |
|---|---|---|---|---|---|
| 1303 | 16 | 13 | 11 | 8 | 5 |
| 1351 | 17 | 15 | 12 | 9 | 6 |
| 1399 | 19 | 16 | 13 | 10 | 8 |
| 1448 | 20 | 17 | 14 | 11 | 9 |
| 1496 | 21 | 18 | 15 | 13 | 10 |
| 1544 | 22 | 19 | 16 | 14 | 11 |
| 1593 | 23 | 20 | 18 | 15 | 12 |
| 1641 | 24 | 21 | 19 | 16 | 13 |
| 1689 | 25 | 22 | 20 | 17 | 14 |
| 1737 | 26 | 23 | 21 | 18 | 15 |
| 1792 | 27 | 25 | 22 | 19 | 16 |
| 1848 | 29 | 26 | 23 | 20 | 17 |
| 1903 | 30 | 27 | 24 | 21 | 19 |
| 1958 | 31 | 28 | 25 | 22 | 20 |
| 2013 | 32 | 29 | 26 | 23 | 21 |
| 2068 | 33 | 30 | 27 | 24 | 22 |
| 2130 | 34 | 31 | 28 | 26 | 23 |
| 2192 | 35 | 32 | 29 | 27 | 24 |
| 2254 | 36 | 33 | 31 | 28 | 25 |
| 2316 | 37 | 34 | 32 | 29 | 26 |
| 2378 | 38 | 35 | 33 | 30 | 27 |
| 2440 | 39 | 36 | 34 | 31 | 28 |
| 2509 | 40 | 38 | 35 | 32 | 29 |
| 2578 | 41 | 39 | 36 | 33 | 30 |
| 2647 | 42 | 40 | 37 | 34 | 31 |
| 2716 | 44 | 41 | 38 | 35 | 32 |
| 2785 | 45 | 42 | 39 | 36 | 33 |
| 2854 | 46 | 43 | 40 | 37 | 34 |
| 2923 | 47 | 44 | 41 | 38 | 35 |
| 2992 | 48 | 45 | 42 | 39 | 36 |
| 3061 | 48 | 46 | 43 | 40 | 37 |
| 3130 | 49 | 47 | 44 | 41 | 38 |
| 3199 | 50 | 48 | 45 | 42 | 39 |
| 3268 | 51 | 48 | 46 | 43 | 40 |
| 3337 | 52 | 49 | 47 | 44 | 41 |
| 3406 | 53 | 50 | 47 | 45 | 42 |
| 3475 | 54 | 51 | 48 | 46 | 43 |
| 3544 | 55 | 52 | 49 | 46 | 44 |
| 3612 | 56 | 53 | 50 | 47 | 45 |
| 3681 | 56 | 54 | 51 | 48 | 45 |

350063-701 REV. -

A230229

**Table 9 – Dry Coil Air Delivery** - Horizontal and Downflow Discharge Sizes 24-60 208/230 VAC - 1 Phase**

| Unit Size | Heating Rise °F (°C) | Motor Speed | Allowable Functions | Motor Speed Selection | | ESP (in. W.C.) | 0.1 | 0.2 | 0.3 | 0.4 | 0.5 | 0.6 | 0.7 | 0.8 | 0.9 | 1 |
|---|---|---|---|---|---|---|---|---|---|---|---|---|---|---|---|---|
| 24040 | 25 - 55 (14 - 31) | 1 | Continuous Fan | SW2-5 | SW2-6 | CFM | 480 | 460 | 344 | 212 | NA | NA | NA | NA | NA | NA |
| | | | | OFF | OFF | | | | | | | | | | | |
| | | | Dehumidification Low | SW1-7 | SW1-8 | | | | | | | | | | | |
| | | | | OFF | OFF | | | | | | | | | | | |
| | | | Low Stage Cooling | SW1-3 | SW1-4 | BHP | 0.06 | 0.06 | 0.07 | 0.07 | NA | NA | NA | NA | NA | NA |
| | | | | OFF | OFF | | | | | | | | | | | |
| | | | Low Stage Heating* | SW2-5 | SW2-6 | Gas Heat Rise (°F) | 40 | 42 | NA | NA | NA | NA | NA | NA | NA | NA |
| | | | | OFF | OFF | Gas Heat Rise (°C) | 22 | 23 | NA | NA | NA | NA | NA | NA | NA | NA |
| | | 2 | Continuous Fan* | SW2-5 | SW2-6 | CFM | 712 | 625 | 531 | 440 | 344 | 208 | NA | NA | NA | NA |
| | | | | ON | OFF | | | | | | | | | | | |
| | | | Dehumidification Low | SW1-7 | SW1-8 | | | | | | | | | | | |
| | | | | ON | OFF | | | | | | | | | | | |
| | | | Low Stage Cooling | SW1-3 | SW1-4 | BHP | 0.09 | 0.10 | 0.10 | 0.10 | 0.11 | 0.11 | NA | NA | NA | NA |
| | | | | ON | OFF | | | | | | | | | | | |
| | | | Low Stage Heating | SW2-5 | SW2-6 | Gas Heat Rise (°F) | 27 | 31 | 36 | 44 | NA | NA | NA | NA | NA | NA |
| | | | | ON | OFF | Gas Heat Rise (°C) | 15 | 17 | 20 | 24 | NA | NA | NA | NA | NA | NA |
| | | 3 | Continuous Fan | SW2-5 | SW2-6 | CFM | 747 | 663 | 575 | 473 | 370 | 289 | 179 | NA | NA | NA |
| | | | | OFF | ON | | | | | | | | | | | |
| | | | Dehumidification Low | SW1-7 | SW1-8 | | | | | | | | | | | |
| | | | | OFF | ON | | | | | | | | | | | |
| | | | Low Stage Cooling | SW1-3 | SW1-4 | BHP | 0.10 | 0.11 | 0.11 | 0.12 | 0.12 | 0.13 | 0.13 | NA | NA | NA |
| | | | | OFF | ON | | | | | | | | | | | |
| | | | Low Stage Heating | SW2-5 | SW2-6 | Gas Heat Rise (°F) | 26 | 44 | 50 | NA | NA | NA | NA | NA | NA | NA |
| | | | | OFF | ON | Gas Heat Rise (°C) | 14 | 24 | 28 | NA | NA | NA | NA | NA | NA | NA |
| | | 4 | Continuous Fan | SW2-5 | SW2-6 | CFM | 864 | 790 | 716 | 637 | 552 | 468 | 366 | 295 | 203 | NA |
| | | | | OFF | ON | | | | | | | | | | | |
| | | | Dehumidification Low | SW1-7 | SW1-8 | | | | | | | | | | | |
| | | | | OFF | ON | | | | | | | | | | | |
| | | | Low Stage Cooling* | SW1-3 | SW1-4 | BHP | 0.15 | 0.14 | 0.14 | 0.15 | 0.15 | 0.16 | 0.17 | 0.17 | NA | NA |
| | | | | OFF | ON | | | | | | | | | | | |
| | | | Low Stage Heating | SW2-5 | SW2-6 | Gas Heat Rise (°F) | 22 | 24 | 27 | 30 | 35 | 41 | 53 | NA | NA | NA |
| | | | | OFF | ON | Gas Heat Rise (°C) | 12 | 14 | 15 | 17 | 19 | 23 | 29 | NA | NA | NA |



Manufacturer reserves the right to change, at any time, specifications and designs without notice and without obligations.

**Table 9 – Dry Coil Air Delivery** - Horizontal and Downflow Discharge Sizes 24-60 208/230 VAC - 1 Phase (Continued)**

| Unit Size | Heating Rise °F (°C) | Motor Speed | Allowable Functions | Motor Speed Selection | | | ESP (in. W.C.) | | | | | | | | | |
|---|---|---|---|---|---|---|---|---|---|---|---|---|---|---|---|---|
| | | | | | | | 0.1 | 0.2 | 0.3 | 0.4 | 0.5 | 0.6 | 0.7 | 0.8 | 0.9 | 1 |
| 24040 | 25 - 55 (14 - 31) | 5 | Dehumidification High | SW1-5 | SW1-6 | CFM | 804 | 725 | 643 | 555 | 471 | 380 | 281 | 145 | NA | NA |
| | | | | OFF | OFF | | | | | | | | | | | |
| | | | High Stage Cooling | SW1-1 | SW1-2 | BHP | 0.11 | 0.12 | 0.13 | 0.13 | 0.13 | 0.14 | 0.14 | 0.14 | NA | NA |
| | | | | OFF | OFF | | | | | | | | | | | |
| | | | High Stage Heating* | SW2-1 | SW2-2 | Gas Heat Rise (°F) | 37 | 41 | 46 | 54 | NA | NA | NA | NA | NA | NA |
| | | | | OFF | OFF | Gas Heat Rise (°C) | 21 | 23 | 26 | 30 | NA | NA | NA | NA | NA | NA |
| | | 6 | Dehumidification High | SW1-5 | SW1-6 | CFM | 956 | 883 | 817 | 747 | 676 | 604 | 529 | 450 | 348 | 241 |
| | | | | ON | OFF | | | | | | | | | | | |
| | | | High Stage Cooling | SW1-1 | SW1-2 | BHP | 0.17 | 0.18 | 0.18 | 0.19 | 0.19 | 0.20 | 0.20 | 0.21 | 0.21 | 0.22 |
| | | | | ON | OFF | | | | | | | | | | | |
| | | | High Stage Heating | SW2-1 | SW2-2 | Gas Heat Rise (°F) | 31 | 34 | 36 | 40 | 44 | 49 | 56 | 66 | 86 | 123 |
| | | | | ON | OFF | Gas Heat Rise (°C) | 17 | 19 | 20 | 22 | 24 | 27 | 31 | 37 | 48 | 69 |
| | | 7 | Dehumidification High | SW1-5 | SW1-6 | CFM | 1134 | 1077 | 1020 | 962 | 904 | 842 | 777 | 704 | 634 | 565 |
| | | | | OFF | ON | | | | | | | | | | | |
| | | | High Stage Cooling* | SW1-1 | SW1-2 | BHP | 0.27 | 0.27 | 0.28 | 0.29 | 0.30 | 0.30 | 0.31 | 0.32 | 0.32 | 0.33 |
| | | | | OFF | ON | | | | | | | | | | | |
| | | | High Stage Heating | SW2-1 | SW2-2 | Gas Heat Rise (°F) | 26 | 28 | 29 | 31 | 33 | 35 | 38 | 42 | 47 | 53 |
| | | | | OFF | ON | Gas Heat Rise (°C) | 15 | 15 | 16 | 17 | 18 | 20 | 21 | 23 | 26 | 29 |
| | | 8 | Dehumidification High | SW1-5 | SW1-6 | CFM | 1180 | 1118 | 1059 | 1002 | 943 | 885 | 827 | 766 | 707 | 643 |
| | | | | ON | ON | | | | | | | | | | | |
| | | | High Stage Cooling | SW1-1 | SW1-2 | BHP | 0.27 | 0.28 | 0.29 | 0.30 | 0.30 | 0.31 | 0.32 | 0.32 | 0.33 | 0.34 |
| | | | | ON | ON | | | | | | | | | | | |
| | | | High Stage Heating | SW2-1 | SW2-2 | Gas Heat Rise (°F) | 25 | 27 | 28 | 30 | 32 | 34 | 36 | 39 | 42 | 46 |
| | | | | ON | ON | | | | | | | | | | | |
| | | | High Static Cooling | SW2-8 | | Gas Heat Rise (°C) | 14 | 15 | 16 | 17 | 18 | 19 | 20 | 21 | 22 | 23 |
| | | | | OFF | | | | | | | | | | | | |
| | | 9 | High Static Cooling | SW2-8 | | CFM | 1236 | 1187 | 1133 | 1079 | 1026 | 969 | 911 | 849 | 785 | 713 |
| | | | | ON | | BHP | 0.33 | 0.34 | 0.35 | 0.35 | 0.36 | 0.37 | 0.38 | 0.39 | 0.39 | 0.39 |

**Table 9 – Dry Coil Air Delivery** - Horizontal and Downflow Discharge Sizes 24-60 208/230 VAC - 1 Phase (Continued)**

| Unit Size | Heating Rise °F (°C) | Motor Speed | Allowable Functions | Motor Speed Selection | | | ESP (in. W.C.) | | | | | | | | | |
|---|---|---|---|---|---|---|---|---|---|---|---|---|---|---|---|---|
| | | | | | | | 0.1 | 0.2 | 0.3 | 0.4 | 0.5 | 0.6 | 0.7 | 0.8 | 0.9 | 1 |
| 24060 | 25 - 55 (14 - 31) | 1 | Continuous Fan* | SW2-5 | SW2-6 | CFM | 480 | 460 | 344 | 212 | NA | NA | NA | NA | NA | NA |
| | | | | OFF | OFF | | | | | | | | | | | |
| | | | Dehumidification Low | SW1-7 | SW1-8 | | | | | | | | | | | |
| | | | | OFF | OFF | | | | | | | | | | | |
| | | | Low Stage Cooling | SW1-3 | SW1-4 | BHP | 0.06 | 0.06 | 0.07 | 0.07 | NA | NA | NA | NA | NA | NA |
| | | | | OFF | OFF | | | | | | | | | | | |
| | | | Low Stage Heating | SW2-5 | SW2-6 | Gas Heat Rise (°F) | NA | NA | NA | NA | NA | NA | NA | NA | NA | NA |
| | | | | OFF | OFF | Gas Heat Rise (°C) | NA | NA | NA | NA | NA | NA | NA | NA | NA | NA |
| | | 2 | Continuous Fan | SW2-5 | SW2-6 | CFM | 712 | 625 | 531 | 440 | 344 | 208 | NA | NA | NA | NA |
| | | | | ON | OFF | | | | | | | | | | | |
| | | | Dehumidification Low | SW1-7 | SW1-8 | | | | | | | | | | | |
| | | | | ON | OFF | | | | | | | | | | | |
| | | | Low Stage Cooling | SW1-3 | SW1-4 | BHP | 0.09 | 0.10 | 0.10 | 0.10 | 0.11 | 0.11 | NA | NA | NA | NA |
| | | | | ON | OFF | | | | | | | | | | | |
| | | | Low Stage Heating | SW2-5 | SW2-6 | Gas Heat Rise (°F) | 41 | 46 | 55 | NA | NA | NA | NA | NA | NA | NA |
| | | | | ON | OFF | Gas Heat Rise (°C) | 23 | 26 | 30 | NA | NA | NA | NA | NA | NA | NA |
| | | 3 | Continuous Fan | SW2-5 | SW2-6 | CFM | 747 | 663 | 575 | 473 | 370 | 289 | 179 | NA | NA | NA |
| | | | | OFF | ON | | | | | | | | | | | |
| | | | Dehumidification Low | SW1-7 | SW1-8 | | | | | | | | | | | |
| | | | | OFF | ON | | | | | | | | | | | |
| | | | Low Stage Cooling | SW1-3 | SW1-4 | BHP | 0.10 | 0.11 | 0.11 | 0.12 | 0.12 | 0.13 | 0.13 | NA | NA | NA |
| | | | | OFF | ON | | | | | | | | | | | |
| | | | Low Stage Heating* | SW2-5 | SW2-6 | Gas Heat Rise (°F) | 39 | 44 | 50 | NA | NA | NA | NA | NA | NA | NA |
| | | | | OFF | ON | Gas Heat Rise (°C) | 22 | 24 | 28 | NA | NA | NA | NA | NA | NA | NA |
| | | 4 | Continuous Fan | SW2-5 | SW2-6 | CFM | 864 | 790 | 716 | 637 | 552 | 468 | 366 | 295 | 203 | NA |
| | | | | OFF | ON | | | | | | | | | | | |
| | | | Dehumidification Low | SW1-7 | SW1-8 | | | | | | | | | | | |
| | | | | OFF | ON | | | | | | | | | | | |
| | | | Low Stage Cooling* | SW1-3 | SW1-4 | BHP | 0.15 | 0.14 | 0.14 | 0.15 | 0.15 | 0.16 | 0.17 | 0.17 | NA | NA |
| | | | | OFF | ON | | | | | | | | | | | |
| | | | Low Stage Heating | SW2-5 | SW2-6 | Gas Heat Rise (°F) | 34 | 37 | 41 | 46 | 53 | NA | NA | NA | NA | NA |
| | | | | OFF | ON | Gas Heat Rise (°C) | 19 | 20 | 23 | 25 | 29 | NA | NA | NA | NA | NA |

**Table 9 – Dry Coil Air Delivery** - Horizontal and Downflow Discharge Sizes 24-60 208/230 VAC - 1 Phase (Continued)**

| Unit Size | Heating Rise °F (°C) | Motor Speed | Allowable Functions | Motor Speed Selection | | | ESP (in. W.C.) | | | | | | | | | |
|---|---|---|---|---|---|---|---|---|---|---|---|---|---|---|---|---|
| | | | | | | | 0.1 | 0.2 | 0.3 | 0.4 | 0.5 | 0.6 | 0.7 | 0.8 | 0.9 | 1 |
| 24060 | 25 - 55 (14 - 31) | 5 | Dehumidification High | SW1-5 | SW1-6 | CFM | 804 | 725 | 643 | 555 | 471 | 380 | 281 | 145 | NA | NA |
| | | | | OFF | OFF | | | | | | | | | | | |
| | | | High Stage Cooling | SW1-1 | SW1-2 | BHP | 0.11 | 0.12 | 0.13 | 0.13 | 0.13 | 0.14 | 0.14 | 0.14 | NA | NA |
| | | | | OFF | OFF | | | | | | | | | | | |
| | | | High Stage Heating | SW2-1 | SW2-2 | Gas Heat Rise (°F) | NA | NA | NA | NA | NA | NA | NA | NA | NA | NA |
| | | | | OFF | OFF | Gas Heat Rise (°C) | NA | NA | NA | NA | NA | NA | NA | NA | NA | NA |
| | | 6 | Dehumidification High | SW1-5 | SW1-6 | CFM | 956 | 883 | 817 | 747 | 676 | 604 | 529 | 450 | 348 | 241 |
| | | | | ON | OFF | | | | | | | | | | | |
| | | | High Stage Cooling | SW1-1 | SW1-2 | BHP | 0.17 | 0.18 | 0.18 | 0.19 | 0.19 | 0.20 | 0.20 | 0.21 | 0.21 | 0.22 |
| | | | | ON | OFF | | | | | | | | | | | |
| | | | High Stage Heating | SW2-1 | SW2-2 | Gas Heat Rise (°F) | 47 | 51 | 55 | NA | NA | NA | NA | NA | NA | NA |
| | | | | ON | OFF | Gas Heat Rise (°C) | 26 | 28 | 30 | NA | NA | NA | NA | NA | NA | NA |
| | | 7 | Dehumidification High | SW1-5 | SW1-6 | CFM | 1134 | 1077 | 1020 | 962 | 904 | 842 | 777 | 704 | 634 | 565 |
| | | | | OFF | ON | | | | | | | | | | | |
| | | | High Stage Cooling* | SW1-1 | SW1-2 | BHP | 0.27 | 0.27 | 0.28 | 0.29 | 0.30 | 0.30 | 0.31 | 0.32 | 0.32 | 0.33 |
| | | | | OFF | ON | | | | | | | | | | | |
| | | | High Stage Heating | SW2-1 | SW2-2 | Gas Heat Rise (°F) | 39 | 41 | 44 | 46 | 49 | 53 | NA | NA | NA | NA |
| | | | | OFF | ON | Gas Heat Rise (°C) | 22 | 23 | 24 | 26 | 27 | 29 | NA | NA | NA | NA |
| | | 8 | Dehumidification High | SW1-5 | SW1-6 | CFM | 1180 | 1118 | 1059 | 1002 | 943 | 885 | 827 | 766 | 707 | 643 |
| | | | | ON | ON | | | | | | | | | | | |
| | | | High Stage Cooling | SW1-1 | SW1-2 | BHP | 0.27 | 0.28 | 0.29 | 0.30 | 0.30 | 0.31 | 0.32 | 0.32 | 0.33 | 0.34 |
| | | | | ON | ON | | | | | | | | | | | |
| | | | High Stage Heating* | SW2-1 | SW2-2 | Gas Heat Rise (°F) | 38 | 40 | 42 | 45 | 47 | 50 | 54 | NA | NA | NA |
| | | | | ON | ON | | | | | | | | | | | |
| | | | High Static Cooling | SW2-8 | | Gas Heat Rise (°C) | 21 | 22 | 23 | 25 | 26 | 28 | 30 | NA | NA | NA |
| | | | | OFF | | | 12 | 12 | 13 | 14 | 15 | 16 | 17 | | | |
| | | 9 | High Static Cooling | SW2-8 | | CFM | 1236 | 1187 | 1133 | 1079 | 1026 | 969 | 911 | 849 | 785 | 713 |
| | | | | ON | | BHP | 0.33 | 0.34 | 0.35 | 0.35 | 0.36 | 0.37 | 0.38 | 0.39 | 0.39 | 0.39 |



Manufacturer reserves the right to change, at any time, specifications and designs without notice and without obligations.

**Table 9 – Dry Coil Air Delivery** - Horizontal and Downflow Discharge Sizes 24-60 208/230 VAC - 1 Phase (Continued)**

| Unit Size | Heating Rise °F (°C) | Motor Speed | Allowable Functions | Motor Speed Selection | | | ESP (in. W.C.) | | | | | | | | | |
|---|---|---|---|---|---|---|---|---|---|---|---|---|---|---|---|---|
| | | | | | | | 0.1 | 0.2 | 0.3 | 0.4 | 0.5 | 0.6 | 0.7 | 0.8 | 0.9 | 1 |
| 36060 | 25 - 55 (14 - 31) | 1 | Continuous Fan | SW2-5 | SW2-6 | CFM | 749 | 670 | 593 | 495 | 418 | 333 | 261 | 186 | 139 | NA |
| | | | | OFF | OFF | | | | | | | | | | | |
| | | | Dehumidification Low | SW1-7 | SW1-8 | | | | | | | | | | | |
| | | | | OFF | OFF | | | | | | | | | | | |
| | | | Low Stage Cooling | SW1-3 | SW1-4 | BHP | 0.06 | 0.07 | 0.08 | 0.09 | 0.09 | 0.10 | 0.11 | 0.11 | 0.12 | NA |
| | | | | OFF | OFF | | | | | | | | | | | |
| | | | Low Stage Heating* | SW2-5 | SW2-6 | Gas Heat Rise (°F) | 39 | 43 | 49 | NA | NA | NA | NA | NA | NA | NA |
| | | | | OFF | OFF | Gas Heat Rise (°C) | 22 | 24 | 27 | NA | NA | NA | NA | NA | NA | NA |
| | | 2 | Continuous Fan* | SW2-5 | SW2-6 | CFM | 818 | 742 | 673 | 598 | 512 | 434 | 358 | 279 | 217 | 168 |
| | | | | ON | OFF | | | | | | | | | | | |
| | | | Dehumidification Low | SW1-7 | SW1-8 | | | | | | | | | | | |
| | | | | ON | OFF | | | | | | | | | | | |
| | | | Low Stage Cooling | SW1-3 | SW1-4 | BHP | 0.08 | 0.08 | 0.09 | 0.10 | 0.11 | 0.12 | 0.12 | 0.13 | 0.13 | 0.14 |
| | | | | ON | OFF | | | | | | | | | | | |
| | | | Low Stage Heating | SW2-5 | SW2-6 | Gas Heat Rise (°F) | 35 | 39 | 43 | 49 | NA | NA | NA | NA | NA | NA |
| | | | | ON | OFF | Gas Heat Rise (°C) | 20 | 22 | 24 | 27 | NA | NA | NA | NA | NA | NA |
| | | 3 | Continuous Fan | SW2-5 | SW2-6 | CFM | 980 | 882 | 814 | 747 | 679 | 608 | 545 | 482 | 432 | 384 |
| | | | | OFF | ON | | | | | | | | | | | |
| | | | Dehumidification Low | SW1-7 | SW1-8 | | | | | | | | | | | |
| | | | | OFF | ON | | | | | | | | | | | |
| | | | Low Stage Cooling | SW1-3 | SW1-4 | BHP | 0.11 | 0.11 | 0.12 | 0.12 | 0.13 | 0.14 | 0.15 | 0.15 | 0.16 | 0.17 |
| | | | | OFF | ON | | | | | | | | | | | |
| | | | Low Stage Heating | SW2-5 | SW2-6 | Gas Heat Rise (°F) | 30 | 33 | 36 | 39 | 43 | 48 | 53 | NA | NA | NA |
| | | | | OFF | ON | Gas Heat Rise (°C) | 16 | 18 | 20 | 22 | 24 | 27 | 30 | NA | NA | NA |
| | | 4 | Continuous Fan | SW2-5 | SW2-6 | CFM | 1028 | 964 | 901 | 838 | 774 | 711 | 647 | 588 | 532 | 484 |
| | | | | OFF | ON | | | | | | | | | | | |
| | | | Dehumidification Low | SW1-7 | SW1-8 | | | | | | | | | | | |
| | | | | OFF | ON | | | | | | | | | | | |
| | | | Low Stage Cooling* | SW1-3 | SW1-4 | BHP | 0.12 | 0.13 | 0.14 | 0.15 | 0.15 | 0.16 | 0.17 | 0.18 | 0.19 | 0.19 |
| | | | | OFF | ON | | | | | | | | | | | |
| | | | Low Stage Heating | SW2-5 | SW2-6 | Gas Heat Rise (°F) | 28 | 30 | 32 | 35 | 37 | 41 | 45 | 49 | 55 | NA |
| | | | | OFF | ON | Gas Heat Rise (°C) | 16 | 17 | 18 | 19 | 21 | 23 | 25 | 27 | 30 | NA |



Manufacturer reserves the right to change, at any time, specifications and designs without notice and without obligations.

**Table 9 – Dry Coil Air Delivery** - Horizontal and Downflow Discharge Sizes 24-60 208/230 VAC - 1 Phase (Continued)**

| Unit Size | Heating Rise °F (°C) | Motor Speed | Allowable Functions | Motor Speed Selection | | | ESP (in. W.C.) | | | | | | | | | |
|---|---|---|---|---|---|---|---|---|---|---|---|---|---|---|---|---|
| | | | | | | | 0.1 | 0.2 | 0.3 | 0.4 | 0.5 | 0.6 | 0.7 | 0.8 | 0.9 | 1 |
| 36060 | 25 - 55 (14 - 31) | 5 | Dehumidification High | SW1-5 | SW1-6 | CFM | 1164 | 1107 | 1051 | 995 | 939 | 882 | 824 | 767 | 711 | 656 |
| | | | | OFF | OFF | | | | | | | | | | | |
| | | | High Stage Cooling | SW1-1 | SW1-2 | BHP | 0.16 | 0.17 | 0.18 | 0.19 | 0.20 | 0.21 | 0.22 | 0.22 | 0.23 | 0.24 |
| | | | | OFF | OFF | | | | | | | | | | | |
| | | | High Stage Heating* | SW2-1 | SW2-2 | Gas Heat Rise (°F) | 38 | 40 | 42 | 45 | 48 | 51 | 54 | NA | NA | NA |
| | | | | OFF | OFF | Gas Heat Rise (°C) | 21 | 22 | 24 | 25 | 26 | 28 | 30 | NA | NA | NA |
| | | 6 | Dehumidification High | SW1-5 | SW1-6 | CFM | 1299 | 1246 | 1196 | 1146 | 1095 | 1043 | 990 | 937 | 886 | 825 |
| | | | | ON | OFF | | | | | | | | | | | |
| | | | High Stage Cooling | SW1-1 | SW1-2 | BHP | 0.21 | 0.21 | 0.22 | 0.23 | 0.24 | 0.25 | 0.26 | 0.27 | 0.28 | 0.29 |
| | | | | ON | OFF | | | | | | | | | | | |
| | | | High Stage Heating | SW2-1 | SW2-2 | Gas Heat Rise (°F) | 34 | 36 | 37 | 39 | 41 | 43 | 45 | 48 | 50 | 54 |
| | | | | ON | OFF | Gas Heat Rise (°C) | 19 | 20 | 21 | 22 | 23 | 24 | 25 | 26 | 28 | 30 |
| | | 7 | Dehumidification High | SW1-5 | SW1-6 | CFM | 1391 | 1340 | 1294 | 1247 | 1199 | 1151 | 1104 | 1054 | 1003 | 946 |
| | | | | OFF | ON | | | | | | | | | | | |
| | | | High Stage Cooling | SW1-1 | SW1-2 | BHP | 0.25 | 0.26 | 0.27 | 0.28 | 0.29 | 0.30 | 0.31 | 0.32 | 0.33 | 0.34 |
| | | | | OFF | ON | | | | | | | | | | | |
| | | | High Stage Heating | SW2-1 | SW2-2 | Gas Heat Rise (°F) | 32 | 33 | 34 | 36 | 37 | 39 | 40 | 42 | 45 | 47 |
| | | | | OFF | ON | Gas Heat Rise (°C) | 18 | 19 | 19 | 20 | 21 | 22 | 22 | 24 | 25 | 26 |
| | | 8 | Dehumidification High | SW1-5 | SW1-6 | CFM | 1423 | 1377 | 1331 | 1288 | 1240 | 1192 | 1147 | 1097 | 1047 | 998 |
| | | | | ON | ON | | | | | | | | | | | |
| | | | High Stage Cooling* | SW1-1 | SW1-2 | BHP | 0.26 | 0.27 | 0.28 | 0.29 | 0.30 | 0.32 | 0.33 | 0.34 | 0.35 | 0.36 |
| | | | | ON | ON | | | | | | | | | | | |
| | | | High Stage Heating | SW2-1 | SW2-2 | Gas Heat Rise (°F) | 31 | 32 | 34 | 35 | 36 | 37 | 39 | 41 | 43 | 45 |
| | | | | ON | ON | | | | | | | | | | | |
| | | | High Static Cooling | SW2-8 | | Gas Heat Rise (°C) | 17 | 18 | 19 | 19 | 20 | 21 | 22 | 23 | 24 | 25 |
| | | | | OFF | | | 10 | 10 | 10 | 11 | 11 | 12 | 12 | 13 | 13 | 14 |
| | | 9 | High Static Cooling | SW2-8 | | CFM | 1511 | 1466 | 1420 | 1378 | 1338 | 1293 | 1245 | 1200 | 1156 | 1109 |
| | | | | ON | | BHP | 0.30 | 0.31 | 0.33 | 0.34 | 0.35 | 0.36 | 0.37 | 0.38 | 0.39 | 0.40 |



Manufacturer reserves the right to change, at any time, specifications and designs without notice and without obligations.

**Table 9 – Dry Coil Air Delivery** - Horizontal and Downflow Discharge Sizes 24-60 208/230 VAC - 1 Phase (Continued)**

| Unit Size | Heating Rise °F (°C) | Motor Speed | Allowable Functions | Motor Speed Selection | | | ESP (in. W.C.) | | | | | | | | | |
|---|---|---|---|---|---|---|---|---|---|---|---|---|---|---|---|---|
| | | | | | | | 0.1 | 0.2 | 0.3 | 0.4 | 0.5 | 0.6 | 0.7 | 0.8 | 0.9 | 1 |
| 36090 | 35 - 65 (19 - 36) | 1 | Continuous Fan* | SW2-5 | SW2-6 | CFM | 749 | 670 | 593 | 495 | 418 | 333 | 261 | 186 | 139 | NA |
| | | | | OFF | OFF | | | | | | | | | | | |
| | | | Dehumidification Low | SW1-7 | SW1-8 | | | | | | | | | | | |
| | | | | OFF | OFF | | | | | | | | | | | |
| | | | Low Stage Cooling | SW1-3 | SW1-4 | BHP | 0.06 | 0.07 | 0.08 | 0.09 | 0.09 | 0.10 | 0.11 | 0.11 | 0.12 | NA |
| | | | | OFF | OFF | | | | | | | | | | | |
| | | | Low Stage Heating | SW2-5 | SW2-6 | Gas Heat Rise (°F) | 58 | 65 | NA | NA | NA | NA | NA | NA | NA | NA |
| | | | | OFF | OFF | Gas Heat Rise (°C) | 32 | 36 | NA | NA | NA | NA | NA | NA | NA | NA |
| | | 2 | Continuous Fan | SW2-5 | SW2-6 | CFM | 974 | 761 | 685 | 609 | 534 | 459 | 403 | 346 | 291 | 242 |
| | | | | ON | OFF | | | | | | | | | | | |
| | | | Dehumidification Low | SW1-7 | SW1-8 | | | | | | | | | | | |
| | | | | ON | OFF | | | | | | | | | | | |
| | | | Low Stage Cooling | SW1-3 | SW1-4 | BHP | 0.11 | 0.09 | 0.09 | 0.10 | 0.11 | 0.11 | 0.12 | 0.13 | 0.13 | 0.14 |
| | | | | ON | OFF | | | | | | | | | | | |
| | | | Low Stage Heating | SW2-5 | SW2-6 | Gas Heat Rise (°F) | 45 | 57 | 64 | NA | NA | NA | NA | NA | NA | NA |
| | | | | ON | OFF | Gas Heat Rise (°C) | 25 | 32 | 35 | NA | NA | NA | NA | NA | NA | NA |
| | | 3 | Continuous Fan | SW2-5 | SW2-6 | CFM | 980 | 882 | 814 | 747 | 679 | 608 | 545 | 482 | 432 | 384 |
| | | | | OFF | ON | | | | | | | | | | | |
| | | | Dehumidification Low | SW1-7 | SW1-8 | | | | | | | | | | | |
| | | | | OFF | ON | | | | | | | | | | | |
| | | | Low Stage Cooling | SW1-3 | SW1-4 | BHP | 0.11 | 0.11 | 0.12 | 0.12 | 0.13 | 0.14 | 0.15 | 0.15 | 0.16 | 0.17 |
| | | | | OFF | ON | | | | | | | | | | | |
| | | | Low Stage Heating* | SW2-5 | SW2-6 | Gas Heat Rise (°F) | 44 | 49 | 53 | 58 | 64 | NA | NA | NA | NA | NA |
| | | | | OFF | ON | Gas Heat Rise (°C) | 25 | 27 | 30 | 32 | 36 | NA | NA | NA | NA | NA |
| | | 4 | Continuous Fan | SW2-5 | SW2-6 | CFM | 1028 | 964 | 901 | 838 | 774 | 711 | 647 | 588 | 532 | 484 |
| | | | | OFF | ON | | | | | | | | | | | |
| | | | Dehumidification Low | SW1-7 | SW1-8 | | | | | | | | | | | |
| | | | | OFF | ON | | | | | | | | | | | |
| | | | Low Stage Cooling* | SW1-3 | SW1-4 | BHP | 0.12 | 0.13 | 0.14 | 0.15 | 0.15 | 0.16 | 0.17 | 0.18 | 0.19 | 0.19 |
| | | | | OFF | ON | | | | | | | | | | | |
| | | | Low Stage Heating | SW2-5 | SW2-6 | Gas Heat Rise (°F) | 42 | 45 | 48 | 52 | 56 | 61 | NA | NA | NA | NA |
| | | | | OFF | ON | Gas Heat Rise (°C) | 24 | 25 | 27 | 29 | 31 | 34 | NA | NA | NA | NA |

**Table 9 – Dry Coil Air Delivery** - Horizontal and Downflow Discharge Sizes 24-60 208/230 VAC - 1 Phase (Continued)**

| Unit Size | Heating Rise °F (°C) | Motor Speed | Allowable Functions | Motor Speed Selection | | | ESP (in. W.C.) | | | | | | | | | |
|---|---|---|---|---|---|---|---|---|---|---|---|---|---|---|---|---|
| | | | | | | | 0.1 | 0.2 | 0.3 | 0.4 | 0.5 | 0.6 | 0.7 | 0.8 | 0.9 | 1 |
| 36090 | 35 - 65 (19 - 36) | 5 | Dehumidification High | SW1-5 | SW1-6 | CFM | 1164 | 1107 | 1051 | 995 | 939 | 882 | 824 | 767 | 711 | 656 |
| | | | | OFF | OFF | | | | | | | | | | | |
| | | | High Stage Cooling | SW1-1 | SW1-2 | BHP | 0.16 | 0.17 | 0.18 | 0.19 | 0.20 | 0.21 | 0.22 | 0.22 | 0.23 | 0.24 |
| | | | | OFF | OFF | | | | | | | | | | | |
| | | | High Stage Heating | SW2-1 | SW2-2 | Gas Heat Rise (°F) | 58 | 60 | 64 | NA | NA | NA | NA | NA | NA | NA |
| | | | | OFF | OFF | Gas Heat Rise (°C) | 32 | 34 | 35 | NA | NA | NA | NA | NA | NA | NA |
| | | 6 | Dehumidification High | SW1-5 | SW1-6 | CFM | 1299 | 1246 | 1196 | 1146 | 1095 | 1043 | 990 | 937 | 886 | 825 |
| | | | | ON | OFF | | | | | | | | | | | |
| | | | High Stage Cooling | SW1-1 | SW1-2 | BHP | 0.21 | 0.21 | 0.22 | 0.23 | 0.24 | 0.25 | 0.26 | 0.27 | 0.28 | 0.29 |
| | | | | ON | OFF | | | | | | | | | | | |
| | | | High Stage Heating | SW2-1 | SW2-2 | Gas Heat Rise (°F) | 52 | 54 | 56 | 58 | 61 | 64 | NA | NA | NA | NA |
| | | | | ON | OFF | Gas Heat Rise (°C) | 29 | 30 | 31 | 32 | 34 | 36 | NA | NA | NA | NA |
| | | 7 | Dehumidification High | SW1-5 | SW1-6 | CFM | 1391 | 1340 | 1294 | 1247 | 1199 | 1151 | 1104 | 1054 | 1003 | 946 |
| | | | | OFF | ON | | | | | | | | | | | |
| | | | High Stage Cooling | SW1-1 | SW1-2 | BHP | 0.25 | 0.26 | 0.27 | 0.28 | 0.29 | 0.30 | 0.31 | 0.32 | 0.33 | 0.34 |
| | | | | OFF | ON | | | | | | | | | | | |
| | | | High Stage Heating* | SW2-1 | SW2-2 | Gas Heat Rise (°F) | 48 | 50 | 52 | 54 | 56 | 58 | 61 | 64 | NA | NA |
| | | | | OFF | ON | Gas Heat Rise (°C) | 27 | 28 | 29 | 30 | 31 | 32 | 34 | 35 | NA | NA |
| | | 8 | Dehumidification High | SW1-5 | SW1-6 | CFM | 1423 | 1377 | 1331 | 1288 | 1240 | 1192 | 1147 | 1097 | 1047 | 998 |
| | | | | ON | ON | | | | | | | | | | | |
| | | | High Stage Cooling* | SW1-1 | SW1-2 | BHP | 0.26 | 0.27 | 0.28 | 0.29 | 0.30 | 0.32 | 0.33 | 0.34 | 0.35 | 0.36 |
| | | | | ON | ON | | | | | | | | | | | |
| | | | High Stage Heating | SW2-1 | SW2-2 | Gas Heat Rise (°F) | 47 | 49 | 50 | 52 | 54 | 56 | 58 | 61 | 64 | NA |
| | | | | ON | ON | | | | | | | | | | | |
| | | | High Static Cooling | SW2-8 | | Gas Heat Rise (°C) | 26 | 27 | 28 | 29 | 30 | 31 | 32 | 34 | 36 | NA |
| | | | | OFF | | | 15 | 15 | 16 | 16 | 17 | 17 | 18 | 19 | 20 | 0 |
| | | 9 | High Static Cooling | SW2-8 | | CFM | 1511 | 1466 | 1420 | 1378 | 1338 | 1293 | 1245 | 1200 | 1156 | 1109 |
| | | | | ON | | BHP | 0.30 | 0.31 | 0.33 | 0.34 | 0.35 | 0.36 | 0.37 | 0.38 | 0.39 | 0.40 |

**Table 9 – Dry Coil Air Delivery** - Horizontal and Downflow Discharge Sizes 24-60 208/230 VAC - 1 Phase (Continued)**

| Unit Size | Heating Rise °F (°C) | Motor Speed | Allowable Functions | Motor Speed Selection | | | ESP (in. W.C.) | | | | | | | | | |
|---|---|---|---|---|---|---|---|---|---|---|---|---|---|---|---|---|
| | | | | | | | 0.1 | 0.2 | 0.3 | 0.4 | 0.5 | 0.6 | 0.7 | 0.8 | 0.9 | 1 |
| 48090 | 35 - 65 (19 - 36) | 1 | Continuous Fan* | SW2-5 | SW2-6 | CFM | 903 | 696 | 622 | 552 | 482 | 419 | 358 | 303 | 255 | 199 |
| | | | | OFF | OFF | | | | | | | | | | | |
| | | | Dehumidification Low | SW1-7 | SW1-8 | | | | | | | | | | | |
| | | | | OFF | OFF | | | | | | | | | | | |
| | | | Low Stage Cooling | SW1-3 | SW1-4 | BHP | 0.10 | 0.08 | 0.09 | 0.09 | 0.10 | 0.11 | 0.11 | 0.12 | 0.13 | 0.13 |
| | | | | OFF | OFF | | | | | | | | | | | |
| | | | Low Stage Heating | SW2-5 | SW2-6 | Gas Heat Rise (°F) | 48 | 63 | NA | NA | NA | NA | NA | NA | NA | NA |
| | | | | OFF | OFF | Gas Heat Rise (°C) | 27 | 35 | NA | NA | NA | NA | NA | NA | NA | NA |
| | | 2 | Continuous Fan | SW2-5 | SW2-6 | CFM | 945 | 885 | 820 | 757 | 696 | 638 | 579 | 527 | 480 | 429 |
| | | | | ON | OFF | | | | | | | | | | | |
| | | | Dehumidification Low | SW1-7 | SW1-8 | | | | | | | | | | | |
| | | | | ON | OFF | | | | | | | | | | | |
| | | | Low Stage Cooling | SW1-3 | SW1-4 | BHP | 0.11 | 0.12 | 0.12 | 0.13 | 0.14 | 0.15 | 0.16 | 0.16 | 0.17 | 0.18 |
| | | | | ON | OFF | | | | | | | | | | | |
| | | | Low Stage Heating* | SW2-5 | SW2-6 | Gas Heat Rise (°F) | 46 | 49 | 53 | 57 | 63 | NA | NA | NA | NA | NA |
| | | | | ON | OFF | Gas Heat Rise (°C) | 26 | 27 | 29 | 32 | 35 | NA | NA | NA | NA | NA |
| | | 3 | Continuous Fan | SW2-5 | SW2-6 | CFM | 1102 | 1051 | 999 | 945 | 890 | 837 | 785 | 734 | 681 | 634 |
| | | | | OFF | ON | | | | | | | | | | | |
| | | | Dehumidification Low | SW1-7 | SW1-8 | | | | | | | | | | | |
| | | | | OFF | ON | | | | | | | | | | | |
| | | | Low Stage Cooling | SW1-3 | SW1-4 | BHP | 0.15 | 0.16 | 0.17 | 0.18 | 0.19 | 0.20 | 0.21 | 0.22 | 0.23 | 0.24 |
| | | | | OFF | ON | | | | | | | | | | | |
| | | | Low Stage Heating | SW2-5 | SW2-6 | Gas Heat Rise (°F) | 39 | 41 | 44 | 46 | 49 | 52 | 55 | 59 | 64 | NA |
| | | | | OFF | ON | Gas Heat Rise (°C) | 22 | 23 | 24 | 26 | 27 | 29 | 31 | 33 | 36 | NA |
| | | 4 | Continuous Fan | SW2-5 | SW2-6 | CFM | 1297 | 1253 | 1207 | 1163 | 1115 | 1066 | 1018 | 974 | 931 | 888 |
| | | | | OFF | ON | | | | | | | | | | | |
| | | | Dehumidification Low | SW1-7 | SW1-8 | | | | | | | | | | | |
| | | | | OFF | ON | | | | | | | | | | | |
| | | | Low Stage Cooling* | SW1-3 | SW1-4 | BHP | 0.23 | 0.24 | 0.24 | 0.26 | 0.27 | 0.27 | 0.28 | 0.29 | 0.30 | 0.31 |
| | | | | OFF | ON | | | | | | | | | | | |
| | | | Low Stage Heating | SW2-5 | SW2-6 | Gas Heat Rise (°F) | 34 | 35 | 36 | 37 | 39 | 41 | 43 | 45 | 47 | 49 |
| | | | | OFF | ON | Gas Heat Rise (°C) | 19 | 19 | 20 | 21 | 22 | 23 | 24 | 25 | 26 | 27 |

Manufacturer reserves the right to change, at any time, specifications and designs without notice and without obligations.

**Table 9 – Dry Coil Air Delivery** - Horizontal and Downflow Discharge Sizes 24-60 208/230 VAC - 1 Phase (Continued)**

| Unit Size | Heating Rise °F (°C) | Motor Speed | Allowable Functions | Motor Speed Selection | | | ESP (in. W.C.) | | | | | | | | | |
|---|---|---|---|---|---|---|---|---|---|---|---|---|---|---|---|---|
| | | | | | | | 0.1 | 0.2 | 0.3 | 0.4 | 0.5 | 0.6 | 0.7 | 0.8 | 0.9 | 1 |
| 48090 | 35 - 65 (19 - 36) | 5 | Dehumidification High | SW1-5 | SW1-6 | CFM | 1383 | 1339 | 1296 | 1254 | 1209 | 1163 | 1119 | 1076 | 1033 | 989 |
| | | | | OFF | OFF | | | | | | | | | | | |
| | | | High Stage Cooling | SW1-1 | SW1-2 | BHP | 0.26 | 0.27 | 0.28 | 0.30 | 0.31 | 0.32 | 0.33 | 0.34 | 0.35 | 0.36 |
| | | | | OFF | OFF | | | | | | | | | | | |
| | | | High Stage Heating* | SW2-1 | SW2-2 | Gas Heat Rise (°F) | 48 | 50 | 52 | 53 | 55 | 58 | 60 | 62 | 65 | NA |
| | | | | OFF | OFF | Gas Heat Rise (°C) | 27 | 28 | 29 | 30 | 31 | 32 | 33 | 35 | 36 | NA |
| | | 6 | Dehumidification High | SW1-5 | SW1-6 | CFM | 1550 | 1511 | 1473 | 1434 | 1399 | 1362 | 1319 | 1278 | 1238 | 1202 |
| | | | | ON | OFF | | | | | | | | | | | |
| | | | High Stage Cooling | SW1-1 | SW1-2 | BHP | 0.36 | 0.37 | 0.38 | 0.39 | 0.40 | 0.41 | 0.42 | 0.44 | 0.45 | 0.46 |
| | | | | ON | OFF | | | | | | | | | | | |
| | | | High Stage Heating | SW2-1 | SW2-2 | Gas Heat Rise (°F) | 43 | 44 | 45 | 47 | 48 | 49 | 51 | 52 | 54 | 56 |
| | | | | ON | OFF | Gas Heat Rise (°C) | 24 | 25 | 25 | 26 | 27 | 27 | 28 | 29 | 30 | 31 |
| | | 7 | Dehumidification High | SW1-5 | SW1-6 | CFM | 1799 | 1759 | 1725 | 1676 | 1625 | 1584 | 1546 | 1509 | 1473 | 1437 |
| | | | | OFF | ON | | | | | | | | | | | |
| | | | High Stage Cooling* | SW1-1 | SW1-2 | BHP | 0.50 | 0.51 | 0.52 | 0.54 | 0.55 | 0.57 | 0.58 | 0.59 | 0.61 | 0.62 |
| | | | | OFF | ON | | | | | | | | | | | |
| | | | High Stage Heating | SW2-1 | SW2-2 | Gas Heat Rise (°F) | 37 | 38 | 39 | 40 | 41 | 42 | 43 | 44 | 45 | 47 |
| | | | | OFF | ON | Gas Heat Rise (°C) | 21 | 21 | 22 | 22 | 23 | 23 | 24 | 25 | 25 | 26 |
| | | 8 | Dehumidification High | SW1-5 | SW1-6 | CFM | 1936 | 1901 | 1864 | 1831 | 1798 | 1767 | 1736 | 1702 | 1670 | 1633 |
| | | | | ON | ON | | | | | | | | | | | |
| | | | High Stage Cooling | SW1-1 | SW1-2 | BHP | 0.63 | 0.64 | 0.65 | 0.66 | 0.68 | 0.69 | 0.70 | 0.71 | 0.73 | 0.74 |
| | | | | ON | ON | | | | | | | | | | | |
| | | | High Stage Heating | SW2-1 | SW2-2 | Gas Heat Rise (°F) | 35 | 35 | 36 | 37 | 37 | 38 | 39 | 39 | 40 | 41 |
| | | | | ON | ON | | | | | | | | | | | |
| | | | High Static Cooling | SW2-8 | | Gas Heat Rise (°C) | 19 | 20 | 20 | 20 | 21 | 21 | 21 | 22 | 22 | 23 |
| | | | | OFF | | | 11 | 11 | 11 | 11 | 11 | 12 | 12 | 12 | 12 | 13 |
| | | 9 | High Static Cooling | SW2-8 | | CFM | 1966 | 1933 | 1903 | 1872 | 1842 | 1811 | 1782 | 1751 | 1718 | 1619 |
| | | | | ON | | BHP | 0.67 | 0.68 | 0.70 | 0.71 | 0.73 | 0.74 | 0.75 | 0.77 | 0.78 | 0.74 |

Manufacturer reserves the right to change, at any time, specifications and designs without notice and without obligations.

**Table 9 – Dry Coil Air Delivery** - Horizontal and Downflow Discharge Sizes 24-60 208/230 VAC - 1 Phase (Continued)**

| Unit Size | Heating Rise °F (°C) | Motor Speed | Allowable Functions | Motor Speed Selection | | | ESP (in. W.C.) | | | | | | | | | |
|---|---|---|---|---|---|---|---|---|---|---|---|---|---|---|---|---|
| | | | | | | | 0.1 | 0.2 | 0.3 | 0.4 | 0.5 | 0.6 | 0.7 | 0.8 | 0.9 | 1 |
| 48115 | 30 - 60 (17 - 33) | 1 | Continuous Fan* | SW2-5 | SW2-6 | CFM | 903 | 696 | 622 | 552 | 482 | 419 | 358 | 303 | 255 | 199 |
| | | | | OFF | OFF | | | | | | | | | | | |
| | | | Dehumidification Low | SW1-7 | SW1-8 | | | | | | | | | | | |
| | | | | OFF | OFF | | | | | | | | | | | |
| | | | Low Stage Cooling | SW1-3 | SW1-4 | BHP | 0.10 | 0.08 | 0.09 | 0.09 | 0.10 | 0.11 | 0.11 | 0.12 | 0.13 | 0.13 |
| | | | | OFF | OFF | | | | | | | | | | | |
| | | | Low Stage Heating | SW2-5 | SW2-6 | Gas Heat Rise (°F) | NA | NA | NA | NA | NA | NA | NA | NA | NA | NA |
| | | | | OFF | OFF | Gas Heat Rise (°C) | NA | NA | NA | NA | NA | NA | NA | NA | NA | NA |
| | | 2 | Continuous Fan | SW2-5 | SW2-6 | CFM | 945 | 885 | 820 | 757 | 696 | 638 | 579 | 527 | 480 | 429 |
| | | | | ON | OFF | | | | | | | | | | | |
| | | | Dehumidification Low | SW1-7 | SW1-8 | | | | | | | | | | | |
| | | | | ON | OFF | | | | | | | | | | | |
| | | | Low Stage Cooling | SW1-3 | SW1-4 | BHP | 0.11 | 0.12 | 0.12 | 0.13 | 0.14 | 0.15 | 0.16 | 0.16 | 0.17 | 0.18 |
| | | | | ON | OFF | | | | | | | | | | | |
| | | | Low Stage Heating | SW2-5 | SW2-6 | Gas Heat Rise (°F) | 59 | NA | NA | NA | NA | NA | NA | NA | NA | NA |
| | | | | ON | OFF | Gas Heat Rise (°C) | 33 | NA | NA | NA | NA | NA | NA | NA | NA | NA |
| | | 3 | Continuous Fan | SW2-5 | SW2-6 | CFM | 1102 | 1051 | 999 | 945 | 890 | 837 | 785 | 734 | 681 | 634 |
| | | | | OFF | ON | | | | | | | | | | | |
| | | | Dehumidification Low | SW1-7 | SW1-8 | | | | | | | | | | | |
| | | | | OFF | ON | | | | | | | | | | | |
| | | | Low Stage Cooling | SW1-3 | SW1-4 | BHP | 0.15 | 0.16 | 0.17 | 0.18 | 0.19 | 0.20 | 0.21 | 0.22 | 0.23 | 0.24 |
| | | | | OFF | ON | | | | | | | | | | | |
| | | | Low Stage Heating | SW2-5 | SW2-6 | Gas Heat Rise (°F) | 51 | 53 | 56 | 59 | NA | NA | NA | NA | NA | NA |
| | | | | OFF | ON | Gas Heat Rise (°C) | 28 | 29 | 31 | 33 | NA | NA | NA | NA | NA | NA |
| | | 4 | Continuous Fan | SW2-5 | SW2-6 | CFM | 1297 | 1253 | 1207 | 1163 | 1115 | 1066 | 1018 | 974 | 931 | 888 |
| | | | | OFF | ON | | | | | | | | | | | |
| | | | Dehumidification Low | SW1-7 | SW1-8 | | | | | | | | | | | |
| | | | | OFF | ON | | | | | | | | | | | |
| | | | Low Stage Cooling* | SW1-3 | SW1-4 | BHP | 0.23 | 0.24 | 0.24 | 0.26 | 0.27 | 0.27 | 0.28 | 0.29 | 0.30 | 0.31 |
| | | | | OFF | ON | | | | | | | | | | | |
| | | | Low Stage Heating* | SW2-5 | SW2-6 | Gas Heat Rise (°F) | 43 | 45 | 46 | 48 | 50 | 52 | 55 | 57 | 60 | NA |
| | | | | OFF | ON | Gas Heat Rise (°C) | 24 | 25 | 26 | 27 | 28 | 29 | 30 | 32 | 33 | NA |

**Table 9 – Dry Coil Air Delivery** - Horizontal and Downflow Discharge Sizes 24-60 208/230 VAC - 1 Phase (Continued)**

| Unit Size | Heating Rise °F (°C) | Motor Speed | Allowable Functions | Motor Speed Selection | | | ESP (in. W.C.) | | | | | | | | | |
|---|---|---|---|---|---|---|---|---|---|---|---|---|---|---|---|---|
| | | | | | | | 0.1 | 0.2 | 0.3 | 0.4 | 0.5 | 0.6 | 0.7 | 0.8 | 0.9 | 1 |
| 48115 | 30 - 60 (19 - 36) | 5 | Dehumidification High | SW1-5 | SW1-6 | CFM | 1383 | 1339 | 1296 | 1254 | 1209 | 1163 | 1119 | 1076 | 1033 | 989 |
| | | | | OFF | OFF | | | | | | | | | | | |
| | | | High Stage Cooling | SW1-1 | SW1-2 | BHP | 0.26 | 0.27 | 0.28 | 0.30 | 0.31 | 0.32 | 0.33 | 0.34 | 0.35 | 0.36 |
| | | | | OFF | OFF | | | | | | | | | | | |
| | | | High Stage Heating | SW2-1 | SW2-2 | Gas Heat Rise (°F) | NA | NA | NA | NA | NA | NA | NA | NA | NA | NA |
| | | | | OFF | OFF | Gas Heat Rise (°C) | NA | NA | NA | NA | NA | NA | NA | NA | NA | NA |
| | | 6 | Dehumidification High | SW1-5 | SW1-6 | CFM | 1550 | 1511 | 1473 | 1434 | 1399 | 1362 | 1319 | 1278 | 1238 | 1202 |
| | | | | ON | OFF | | | | | | | | | | | |
| | | | High Stage Cooling | SW1-1 | SW1-2 | BHP | 0.36 | 0.37 | 0.38 | 0.39 | 0.40 | 0.41 | 0.42 | 0.44 | 0.45 | 0.46 |
| | | | | ON | OFF | | | | | | | | | | | |
| | | | High Stage Heating | SW2-1 | SW2-2 | Gas Heat Rise (°F) | 55 | 57 | 58 | 60 | NA | NA | NA | NA | NA | NA |
| | | | | ON | OFF | Gas Heat Rise (°C) | 31 | 31 | 32 | 33 | NA | NA | NA | NA | NA | NA |
| | | 7 | Dehumidification High | SW1-5 | SW1-6 | CFM | 1799 | 1759 | 1725 | 1676 | 1625 | 1584 | 1546 | 1509 | 1473 | 1437 |
| | | | | OFF | ON | | | | | | | | | | | |
| | | | High Stage Cooling* | SW1-1 | SW1-2 | BHP | 0.50 | 0.51 | 0.52 | 0.54 | 0.55 | 0.57 | 0.58 | 0.59 | 0.61 | 0.62 |
| | | | | OFF | ON | | | | | | | | | | | |
| | | | High Stage Heating | SW2-1 | SW2-2 | Gas Heat Rise (°F) | 48 | 49 | 50 | 51 | 53 | 54 | 55 | 57 | 58 | 60 |
| | | | | OFF | ON | Gas Heat Rise (°C) | 26 | 27 | 28 | 28 | 29 | 30 | 31 | 31 | 32 | 33 |
| | | 8 | Dehumidification High | SW1-5 | SW1-6 | CFM | 1936 | 1901 | 1864 | 1831 | 1798 | 1767 | 1736 | 1702 | 1670 | 1633 |
| | | | | ON | ON | | | | | | | | | | | |
| | | | High Stage Cooling | SW1-1 | SW1-2 | BHP | 0.63 | 0.64 | 0.65 | 0.66 | 0.68 | 0.69 | 0.70 | 0.71 | 0.73 | 0.74 |
| | | | | ON | ON | | | | | | | | | | | |
| | | | High Stage Heating* | SW2-1 | SW2-2 | Gas Heat Rise (°F) | 44 | 45 | 46 | 47 | 48 | 48 | 49 | 50 | 51 | 52 |
| | | | | ON | ON | | | | | | | | | | | |
| | | | High Static Cooling | SW2-8 | | Gas Heat Rise (°C) | 25 | 25 | 26 | 26 | 26 | 27 | 27 | 28 | 28 | 29 |
| | | | | OFF | | | 14 | 14 | 14 | 14 | 15 | 15 | 15 | 16 | 16 | 16 |
| | | 9 | High Static Cooling | SW2-8 | | CFM | 1966 | 1933 | 1903 | 1872 | 1842 | 1811 | 1782 | 1751 | 1718 | 1619 |
| | | | | ON | | BHP | 0.67 | 0.68 | 0.70 | 0.71 | 0.73 | 0.74 | 0.75 | 0.77 | 0.78 | 0.74 |

Manufacturer reserves the right to change, at any time, specifications and designs without notice and without obligations.

**Table 9 – Dry Coil Air Delivery** - Horizontal and Downflow Discharge Sizes 24-60 208/230 VAC - 1 Phase (Continued)**

| Unit Size | Heating Rise °F (°C) | Motor Speed | Allowable Functions | Motor Speed Selection | | | ESP (in. W.C.) | | | | | | | | | |
|---|---|---|---|---|---|---|---|---|---|---|---|---|---|---|---|---|
| | | | | | | | 0.1 | 0.2 | 0.3 | 0.4 | 0.5 | 0.6 | 0.7 | 0.8 | 0.9 | 1 |
| 48130 | 35 - 65 (19 - 36) | 1 | Continuous Fan* | SW2-5 | SW2-6 | CFM | 903 | 696 | 622 | 552 | 482 | 419 | 358 | 303 | 255 | 199 |
| | | | | OFF | OFF | | | | | | | | | | | |
| | | | Dehumidification Low | SW1-7 | SW1-8 | | | | | | | | | | | |
| | | | | OFF | OFF | | | | | | | | | | | |
| | | | Low Stage Cooling | SW1-3 | SW1-4 | BHP | 0.10 | 0.08 | 0.09 | 0.09 | 0.10 | 0.11 | 0.11 | 0.12 | 0.13 | 0.13 |
| | | | | OFF | OFF | | | | | | | | | | | |
| | | | Low Stage Heating | SW2-5 | SW2-6 | Gas Heat Rise (°F) | NA | NA | NA | NA | NA | NA | NA | NA | NA | NA |
| | | | | OFF | OFF | Gas Heat Rise (°C) | NA | NA | NA | NA | NA | NA | NA | NA | NA | NA |
| | | 2 | Continuous Fan | SW2-5 | SW2-6 | CFM | 945 | 885 | 820 | 757 | 696 | 638 | 579 | 527 | 480 | 429 |
| | | | | ON | OFF | | | | | | | | | | | |
| | | | Dehumidification Low | SW1-7 | SW1-8 | | | | | | | | | | | |
| | | | | ON | OFF | | | | | | | | | | | |
| | | | Low Stage Cooling | SW1-3 | SW1-4 | BHP | 0.11 | 0.12 | 0.12 | 0.13 | 0.14 | 0.15 | 0.16 | 0.16 | 0.17 | 0.18 |
| | | | | ON | OFF | | | | | | | | | | | |
| | | | Low Stage Heating | SW2-5 | SW2-6 | Gas Heat Rise (°F) | NA | NA | NA | NA | NA | NA | NA | NA | NA | NA |
| | | | | ON | OFF | Gas Heat Rise (°C) | NA | NA | NA | NA | NA | NA | NA | NA | NA | NA |
| | | 3 | Continuous Fan | SW2-5 | SW2-6 | CFM | 1102 | 1051 | 999 | 945 | 890 | 837 | 785 | 734 | 681 | 634 |
| | | | | OFF | ON | | | | | | | | | | | |
| | | | Dehumidification Low | SW1-7 | SW1-8 | | | | | | | | | | | |
| | | | | OFF | ON | | | | | | | | | | | |
| | | | Low Stage Cooling | SW1-3 | SW1-4 | BHP | 0.15 | 0.16 | 0.17 | 0.18 | 0.19 | 0.20 | 0.21 | 0.22 | 0.23 | 0.24 |
| | | | | OFF | ON | | | | | | | | | | | |
| | | | Low Stage Heating | SW2-5 | SW2-6 | Gas Heat Rise (°F) | 57 | 60 | 63 | NA | NA | NA | NA | NA | NA | NA |
| | | | | OFF | ON | Gas Heat Rise (°C) | 32 | 33 | 35 | NA | NA | NA | NA | NA | NA | NA |
| | | 4 | Continuous Fan | SW2-5 | SW2-6 | CFM | 1297 | 1253 | 1207 | 1163 | 1115 | 1066 | 1018 | 974 | 931 | 888 |
| | | | | OFF | ON | | | | | | | | | | | |
| | | | Dehumidification Low | SW1-7 | SW1-8 | | | | | | | | | | | |
| | | | | OFF | ON | | | | | | | | | | | |
| | | | Low Stage Cooling* | SW1-3 | SW1-4 | BHP | 0.23 | 0.24 | 0.24 | 0.26 | 0.27 | 0.27 | 0.28 | 0.29 | 0.30 | 0.31 |
| | | | | OFF | ON | | | | | | | | | | | |
| | | | Low Stage Heating* | SW2-5 | SW2-6 | Gas Heat Rise (°F) | 48 | 50 | 52 | 54 | 56 | 59 | 62 | 65 | NA | NA |
| | | | | OFF | ON | Gas Heat Rise (°C) | 27 | 28 | 29 | 30 | 31 | 33 | 34 | 36 | NA | NA |

**Table 9 – Dry Coil Air Delivery** - Horizontal and Downflow Discharge Sizes 24-60 208/230 VAC - 1 Phase (Continued)**

| Unit Size | Heating Rise °F (°C) | Motor Speed | Allowable Functions | Motor Speed Selection | | | ESP (in. W.C.) | | | | | | | | | |
|---|---|---|---|---|---|---|---|---|---|---|---|---|---|---|---|---|
| | | | | | | | 0.1 | 0.2 | 0.3 | 0.4 | 0.5 | 0.6 | 0.7 | 0.8 | 0.9 | 1 |
| 48130 | 35 - 65 (19 - 36) | 5 | Dehumidification High | SW1-5 | SW1-6 | CFM | 1383 | 1339 | 1296 | 1254 | 1209 | 1163 | 1119 | 1076 | 1033 | 989 |
| | | | | OFF | OFF | | | | | | | | | | | |
| | | | High Stage Cooling | SW1-1 | SW1-2 | BHP | 0.26 | 0.27 | 0.28 | 0.30 | 0.31 | 0.32 | 0.33 | 0.34 | 0.35 | 0.36 |
| | | | | OFF | OFF | | | | | | | | | | | |
| | | | High Stage Heating | SW2-1 | SW2-2 | Gas Heat Rise (°F) | NA | NA | NA | NA | NA | NA | NA | NA | NA | NA |
| | | | | OFF | OFF | Gas Heat Rise (°C) | NA | NA | NA | NA | NA | NA | NA | NA | NA | NA |
| | | 6 | Dehumidification High | SW1-5 | SW1-6 | CFM | 1550 | 1511 | 1473 | 1434 | 1399 | 1362 | 1319 | 1278 | 1238 | 1202 |
| | | | | ON | OFF | | | | | | | | | | | |
| | | | High Stage Cooling | SW1-1 | SW1-2 | BHP | 0.36 | 0.37 | 0.38 | 0.39 | 0.40 | 0.41 | 0.42 | 0.44 | 0.45 | 0.46 |
| | | | | ON | OFF | | | | | | | | | | | |
| | | | High Stage Heating | SW2-1 | SW2-2 | Gas Heat Rise (°F) | 61 | 63 | 64 | NA | NA | NA | NA | NA | NA | NA |
| | | | | ON | OFF | Gas Heat Rise (°C) | 34 | 35 | 36 | NA | NA | NA | NA | NA | NA | NA |
| | | 7 | Dehumidification High | SW1-5 | SW1-6 | CFM | 1799 | 1759 | 1725 | 1676 | 1625 | 1584 | 1546 | 1509 | 1473 | 1437 |
| | | | | OFF | ON | | | | | | | | | | | |
| | | | High Stage Cooling* | SW1-1 | SW1-2 | BHP | 0.50 | 0.51 | 0.52 | 0.54 | 0.55 | 0.57 | 0.58 | 0.59 | 0.61 | 0.62 |
| | | | | OFF | ON | | | | | | | | | | | |
| | | | High Stage Heating | SW2-1 | SW2-2 | Gas Heat Rise (°F) | 53 | 54 | 55 | 56 | 58 | 60 | 61 | 63 | 64 | 66 |
| | | | | OFF | ON | Gas Heat Rise (°C) | 29 | 30 | 30 | 31 | 32 | 33 | 34 | 35 | 36 | 37 |
| | | 8 | Dehumidification High | SW1-5 | SW1-6 | CFM | 1936 | 1901 | 1864 | 1831 | 1798 | 1767 | 1736 | 1702 | 1670 | 1633 |
| | | | | ON | ON | | | | | | | | | | | |
| | | | High Stage Cooling | SW1-1 | SW1-2 | BHP | 0.63 | 0.64 | 0.65 | 0.66 | 0.68 | 0.69 | 0.70 | 0.71 | 0.73 | 0.74 |
| | | | | ON | ON | | | | | | | | | | | |
| | | | High Stage Heating* | SW2-1 | SW2-2 | Gas Heat Rise (°F) | 49 | 50 | 51 | 52 | 53 | 53 | 54 | 56 | 57 | 58 |
| | | | | ON | ON | | | | | | | | | | | |
| | | | High Static Cooling | SW2-8 | | Gas Heat Rise (°C) | 27 | 28 | 28 | 29 | 29 | 30 | 30 | 31 | 31 | 32 |
| | | | | OFF | | | 15 | 15 | 16 | 16 | 16 | 17 | 17 | 17 | 17 | 18 |
| | | 9 | High Static Cooling | SW2-8 | | CFM | 1966 | 1933 | 1903 | 1872 | 1842 | 1811 | 1782 | 1751 | 1718 | 1619 |
| | | | | ON | | BHP | 0.67 | 0.68 | 0.70 | 0.71 | 0.73 | 0.74 | 0.75 | 0.77 | 0.78 | 0.74 |

**Table 9 – Dry Coil Air Delivery** - Horizontal and Downflow Discharge Sizes 24-60 208/230 VAC - 1 Phase (Continued)**

| Unit Size | Heating Rise °F (°C) | Motor Speed | Allowable Functions | Motor Speed Selection | | | ESP (in. W.C.) | | | | | | | | | |
|---|---|---|---|---|---|---|---|---|---|---|---|---|---|---|---|---|
| | | | | | | | 0.1 | 0.2 | 0.3 | 0.4 | 0.5 | 0.6 | 0.7 | 0.8 | 0.9 | 1 |
| 60090 | 35 - 65 (19 - 36) | 1 | Continuous Fan* | SW2-5 | SW2-6 | CFM | 803 | 734 | 661 | 595 | 532 | 464 | 402 | 346 | 284 | 234 |
| | | | | OFF | OFF | | | | | | | | | | | |
| | | | Dehumidification Low | SW1-7 | SW1-8 | | | | | | | | | | | |
| | | | | OFF | OFF | | | | | | | | | | | |
| | | | Low Stage Cooling | SW1-3 | SW1-4 | BHP | 0.08 | 0.09 | 0.09 | 0.10 | 0.11 | 0.11 | 0.12 | 0.13 | 0.13 | 0.14 |
| | | | | OFF | OFF | | | | | | | | | | | |
| | | | Low Stage Heating | SW2-5 | SW2-6 | Gas Heat Rise (°F) | 54 | 59 | NA | NA | NA | NA | NA | NA | NA | NA |
| | | | | OFF | OFF | Gas Heat Rise (°C) | 30 | 33 | NA | NA | NA | NA | NA | NA | NA | NA |
| | | 2 | Continuous Fan | SW2-5 | SW2-6 | CFM | 897 | 829 | 764 | 699 | 641 | 583 | 521 | 463 | 407 | 356 |
| | | | | ON | OFF | | | | | | | | | | | |
| | | | Dehumidification Low | SW1-7 | SW1-8 | | | | | | | | | | | |
| | | | | ON | OFF | | | | | | | | | | | |
| | | | Low Stage Cooling | SW1-3 | SW1-4 | BHP | 0.10 | 0.11 | 0.11 | 0.12 | 0.13 | 0.14 | 0.14 | 0.15 | 0.16 | 0.16 |
| | | | | ON | OFF | | | | | | | | | | | |
| | | | Low Stage Heating* | SW2-5 | SW2-6 | Gas Heat Rise (°F) | 49 | 53 | 57 | 62 | NA | NA | NA | NA | NA | NA |
| | | | | ON | OFF | Gas Heat Rise (°C) | 27 | 29 | 32 | 35 | NA | NA | NA | NA | NA | NA |
| | | 3 | Continuous Fan | SW2-5 | SW2-6 | CFM | 1261 | 1218 | 1163 | 1115 | 1070 | 1020 | 971 | 917 | 872 | 829 |
| | | | | OFF | ON | | | | | | | | | | | |
| | | | Dehumidification Low | SW1-7 | SW1-8 | | | | | | | | | | | |
| | | | | OFF | ON | | | | | | | | | | | |
| | | | Low Stage Cooling | SW1-3 | SW1-4 | BHP | 0.21 | 0.22 | 0.23 | 0.24 | 0.25 | 0.26 | 0.27 | 0.28 | 0.29 | 0.30 |
| | | | | OFF | ON | | | | | | | | | | | |
| | | | Low Stage Heating | SW2-5 | SW2-6 | Gas Heat Rise (°F) | 35 | 36 | 37 | 39 | 41 | 43 | 45 | 47 | 50 | 53 |
| | | | | OFF | ON | Gas Heat Rise (°C) | 19 | 20 | 21 | 22 | 23 | 24 | 25 | 26 | 28 | 29 |
| | | 4 | Continuous Fan | SW2-5 | SW2-6 | CFM | 1507 | 1472 | 1434 | 1388 | 1346 | 1307 | 1270 | 1227 | 1183 | 1142 |
| | | | | OFF | ON | | | | | | | | | | | |
| | | | Dehumidification Low | SW1-7 | SW1-8 | | | | | | | | | | | |
| | | | | OFF | ON | | | | | | | | | | | |
| | | | Low Stage Cooling* | SW1-3 | SW1-4 | BHP | 0.32 | 0.34 | 0.35 | 0.36 | 0.37 | 0.38 | 0.39 | 0.40 | 0.41 | 0.42 |
| | | | | OFF | ON | | | | | | | | | | | |
| | | | Low Stage Heating | SW2-5 | SW2-6 | Gas Heat Rise (°F) | NA | NA | NA | NA | NA | NA | NA | 35 | 37 | 38 |
| | | | | OFF | ON | Gas Heat Rise (°C) | NA | NA | NA | NA | NA | NA | NA | 20 | 20 | 21 |

**Table 9 – Dry Coil Air Delivery** - Horizontal and Downflow Discharge Sizes 24-60 208/230 VAC - 1 Phase (Continued)**

| Unit Size | Heating Rise °F (°C) | Motor Speed | Allowable Functions | Motor Speed Selection | | | ESP (in. W.C.) | | | | | | | | | |
|---|---|---|---|---|---|---|---|---|---|---|---|---|---|---|---|---|
| | | | | | | | 0.1 | 0.2 | 0.3 | 0.4 | 0.5 | 0.6 | 0.7 | 0.8 | 0.9 | 1 |
| 60090 | 35 - 65 (19 - 36) | 5 | Dehumidification High | SW1-5 | SW1-6 | CFM | 1401 | 1364 | 1317 | 1271 | 1228 | 1189 | 1143 | 1097 | 1054 | 1012 |
| | | | | OFF | OFF | | | | | | | | | | | |
| | | | High Stage Cooling | SW1-1 | SW1-2 | BHP | 0.27 | 0.28 | 0.30 | 0.31 | 0.32 | 0.32 | 0.33 | 0.34 | 0.35 | 0.36 |
| | | | | OFF | OFF | | | | | | | | | | | |
| | | | High Stage Heating* | SW2-1 | SW2-2 | Gas Heat Rise (°F) | 48 | 49 | 51 | 53 | 55 | 56 | 59 | 61 | 64 | NA |
| | | | | OFF | OFF | Gas Heat Rise (°C) | 27 | 27 | 28 | 29 | 30 | 31 | 33 | 34 | 35 | NA |
| | | 6 | Dehumidification High | SW1-5 | SW1-6 | CFM | 1683 | 1648 | 1615 | 1579 | 1536 | 1497 | 1462 | 1427 | 1393 | 1355 |
| | | | | ON | OFF | | | | | | | | | | | |
| | | | High Stage Cooling | SW1-1 | SW1-2 | BHP | 0.45 | 0.46 | 0.47 | 0.49 | 0.50 | 0.51 | 0.52 | 0.53 | 0.54 | 0.55 |
| | | | | ON | OFF | | | | | | | | | | | |
| | | | High Stage Heating | SW2-1 | SW2-2 | Gas Heat Rise (°F) | 40 | 41 | 41 | 42 | 44 | 45 | 46 | 47 | 48 | 49 |
| | | | | ON | OFF | Gas Heat Rise (°C) | 22 | 23 | 23 | 24 | 24 | 25 | 25 | 26 | 27 | 27 |
| | | 7 | Dehumidification High | SW1-5 | SW1-6 | CFM | 1933 | 1901 | 1871 | 1843 | 1811 | 1775 | 1740 | 1706 | 1675 | 1606 |
| | | | | OFF | ON | | | | | | | | | | | |
| | | | High Stage Cooling | SW1-1 | SW1-2 | BHP | 0.63 | 0.64 | 0.66 | 0.68 | 0.69 | 0.70 | 0.72 | 0.73 | 0.75 | 0.73 |
| | | | | OFF | ON | | | | | | | | | | | |
| | | | High Stage Heating* | SW2-1 | SW2-2 | Gas Heat Rise (°F) | 35 | 35 | 36 | 36 | 37 | 38 | 38 | 39 | 40 | 42 |
| | | | | OFF | ON | Gas Heat Rise (°C) | 19 | 20 | 20 | 20 | 21 | 21 | 21 | 22 | 22 | 23 |
| | | 8 | Dehumidification High | SW1-5 | SW1-6 | CFM | 1943 | 1905 | 1867 | 1818 | 1787 | 1743 | 1705 | 1664 | 1624 | 1587 |
| | | | | ON | ON | | | | | | | | | | | |
| | | | High Stage Cooling* | SW1-1 | SW1-2 | BHP | 0.63 | 0.64 | 0.66 | 0.67 | 0.68 | 0.69 | 0.70 | 0.71 | 0.73 | 0.74 |
| | | | | ON | ON | | | | | | | | | | | |
| | | | High Stage Heating | SW2-1 | SW2-2 | Gas Heat Rise (°F) | NA | 35 | 36 | 37 | 37 | 38 | 39 | 40 | 41 | 42 |
| | | | | ON | ON | | | | | | | | | | | |
| | | | High Static Cooling | SW2-8 | | Gas Heat Rise (°C) | NA | 20 | 20 | 20 | 21 | 21 | 22 | 22 | 23 | 23 |
| | | | | OFF | | | 0 | 11 | 11 | 11 | 12 | 12 | 12 | 12 | 13 | 13 |
| | | 9 | High Static Cooling | SW2-8 | | CFM | 1969 | 1939 | 1909 | 1881 | 1852 | 1817 | 1781 | 1748 | 1710 | 1613 |
| | | | | ON | | BHP | 0.66 | 0.67 | 0.69 | 0.71 | 0.72 | 0.74 | 0.75 | 0.76 | 0.77 | 0.73 |



Manufacturer reserves the right to change, at any time, specifications and designs without notice and without obligations.

**Table 9 – Dry Coil Air Delivery** - Horizontal and Downflow Discharge Sizes 24-60 208/230 VAC - 1 Phase (Continued)**

| Unit Size | Heating Rise °F (°C) | Motor Speed | Allowable Functions | Motor Speed Selection | | | ESP (in. W.C.) | | | | | | | | | |
|---|---|---|---|---|---|---|---|---|---|---|---|---|---|---|---|---|
| | | | | | | | 0.1 | 0.2 | 0.3 | 0.4 | 0.5 | 0.6 | 0.7 | 0.8 | 0.9 | 1 |
| 60115 | 30 - 60 (17 - 33) | 1 | Continuous Fan* | SW2-5 | SW2-6 | CFM | 803 | 734 | 661 | 595 | 532 | 464 | 402 | 346 | 284 | 234 |
| | | | | OFF | OFF | | | | | | | | | | | |
| | | | Dehumidification Low | SW1-7 | SW1-8 | | | | | | | | | | | |
| | | | | OFF | OFF | | | | | | | | | | | |
| | | | Low Stage Cooling | SW1-3 | SW1-4 | BHP | 0.08 | 0.09 | 0.09 | 0.10 | 0.11 | 0.11 | 0.12 | 0.13 | 0.13 | 0.14 |
| | | | | OFF | OFF | | | | | | | | | | | |
| | | | Low Stage Heating | SW2-5 | SW2-6 | Gas Heat Rise (°F) | NA | NA | NA | NA | NA | NA | NA | NA | NA | NA |
| | | | | OFF | OFF | Gas Heat Rise (°C) | NA | NA | NA | NA | NA | NA | NA | NA | NA | NA |
| | | 2 | Continuous Fan | SW2-5 | SW2-6 | CFM | 897 | 829 | 764 | 699 | 641 | 583 | 521 | 463 | 407 | 356 |
| | | | | ON | OFF | | | | | | | | | | | |
| | | | Dehumidification Low | SW1-7 | SW1-8 | | | | | | | | | | | |
| | | | | ON | OFF | | | | | | | | | | | |
| | | | Low Stage Cooling | SW1-3 | SW1-4 | BHP | 0.10 | 0.11 | 0.11 | 0.12 | 0.13 | 0.14 | 0.14 | 0.15 | 0.16 | 0.16 |
| | | | | ON | OFF | | | | | | | | | | | |
| | | | Low Stage Heating | SW2-5 | SW2-6 | Gas Heat Rise (°F) | NA | NA | NA | NA | NA | NA | NA | NA | NA | NA |
| | | | | ON | OFF | Gas Heat Rise (°C) | NA | NA | NA | NA | NA | NA | NA | NA | NA | NA |
| | | 3 | Continuous Fan | SW2-5 | SW2-6 | CFM | 1261 | 1218 | 1163 | 1115 | 1070 | 1020 | 971 | 917 | 872 | 829 |
| | | | | OFF | ON | | | | | | | | | | | |
| | | | Dehumidification Low | SW1-7 | SW1-8 | | | | | | | | | | | |
| | | | | OFF | ON | | | | | | | | | | | |
| | | | Low Stage Cooling | SW1-3 | SW1-4 | BHP | 0.21 | 0.22 | 0.23 | 0.24 | 0.25 | 0.26 | 0.27 | 0.28 | 0.29 | 0.30 |
| | | | | OFF | ON | | | | | | | | | | | |
| | | | Low Stage Heating* | SW2-5 | SW2-6 | Gas Heat Rise (°F) | 44 | 46 | 48 | 50 | 52 | 55 | 57 | NA | NA | NA |
| | | | | OFF | ON | Gas Heat Rise (°C) | 25 | 25 | 27 | 28 | 29 | 30 | 32 | NA | NA | NA |
| | | 4 | Continuous Fan | SW2-5 | SW2-6 | CFM | 1507 | 1472 | 1434 | 1388 | 1346 | 1307 | 1270 | 1227 | 1183 | 1142 |
| | | | | OFF | ON | | | | | | | | | | | |
| | | | Dehumidification Low | SW1-7 | SW1-8 | | | | | | | | | | | |
| | | | | OFF | ON | | | | | | | | | | | |
| | | | Low Stage Cooling* | SW1-3 | SW1-4 | BHP | 0.32 | 0.34 | 0.35 | 0.36 | 0.37 | 0.38 | 0.39 | 0.40 | 0.41 | 0.42 |
| | | | | OFF | ON | | | | | | | | | | | |
| | | | Low Stage Heating | SW2-5 | SW2-6 | Gas Heat Rise (°F) | 37 | 38 | 39 | 40 | 41 | 43 | 44 | 45 | 47 | 49 |
| | | | | OFF | ON | Gas Heat Rise (°C) | 21 | 21 | 22 | 22 | 23 | 24 | 24 | 25 | 26 | 27 |

Manufacturer reserves the right to change, at any time, specifications and designs without notice and without obligations.

**Table 9 – Dry Coil Air Delivery** - Horizontal and Downflow Discharge Sizes 24-60 208/230 VAC - 1 Phase (Continued)**

| Unit Size | Heating Rise °F (°C) | Motor Speed | Allowable Functions | Motor Speed Selection | | | ESP (in. W.C.) | | | | | | | | | |
|---|---|---|---|---|---|---|---|---|---|---|---|---|---|---|---|---|
| | | | | | | | 0.1 | 0.2 | 0.3 | 0.4 | 0.5 | 0.6 | 0.7 | 0.8 | 0.9 | 1 |
| 60115 | 30 - 60 (19 - 36) | 5 | Dehumidification High | SW1-5 | SW1-6 | CFM | 1401 | 1364 | 1317 | 1271 | 1228 | 1189 | 1143 | 1097 | 1054 | 1012 |
| | | | | OFF | OFF | | | | | | | | | | | |
| | | | High Stage Cooling | SW1-1 | SW1-2 | BHP | 0.27 | 0.28 | 0.30 | 0.31 | 0.32 | 0.32 | 0.33 | 0.34 | 0.35 | 0.36 |
| | | | | OFF | OFF | | | | | | | | | | | |
| | | | High Stage Heating | SW2-1 | SW2-2 | Gas Heat Rise (°F) | NA | NA | NA | NA | NA | NA | NA | NA | NA | NA |
| | | | | OFF | OFF | Gas Heat Rise (°C) | NA | NA | NA | NA | NA | NA | NA | NA | NA | NA |
| | | 6 | Dehumidification High | SW1-5 | SW1-6 | CFM | 1683 | 1648 | 1615 | 1579 | 1536 | 1497 | 1462 | 1427 | 1393 | 1355 |
| | | | | ON | OFF | | | | | | | | | | | |
| | | | High Stage Cooling | SW1-1 | SW1-2 | BHP | 0.45 | 0.46 | 0.47 | 0.49 | 0.50 | 0.51 | 0.52 | 0.53 | 0.54 | 0.55 |
| | | | | ON | OFF | | | | | | | | | | | |
| | | | High Stage Heating | SW2-1 | SW2-2 | Gas Heat Rise (°F) | 51 | 52 | 53 | 54 | 56 | 57 | 59 | 60 | NA | NA |
| | | | | ON | OFF | Gas Heat Rise (°C) | 28 | 29 | 29 | 30 | 31 | 32 | 33 | 33 | NA | NA |
| | | 7 | Dehumidification High | SW1-5 | SW1-6 | CFM | 1933 | 1901 | 1871 | 1843 | 1811 | 1775 | 1740 | 1706 | 1675 | 1606 |
| | | | | OFF | ON | | | | | | | | | | | |
| | | | High Stage Cooling | SW1-1 | SW1-2 | BHP | 0.63 | 0.64 | 0.66 | 0.68 | 0.69 | 0.70 | 0.72 | 0.73 | 0.75 | 0.73 |
| | | | | OFF | ON | | | | | | | | | | | |
| | | | High Stage Heating* | SW2-1 | SW2-2 | Gas Heat Rise (°F) | 44 | 45 | 46 | 46 | 47 | 48 | 49 | 50 | 51 | 53 |
| | | | | OFF | ON | Gas Heat Rise (°C) | 25 | 25 | 25 | 26 | 26 | 27 | 27 | 28 | 28 | 30 |
| | | 8 | Dehumidification High | SW1-5 | SW1-6 | CFM | 1943 | 1905 | 1867 | 1818 | 1787 | 1743 | 1705 | 1664 | 1624 | 1587 |
| | | | | ON | ON | | | | | | | | | | | |
| | | | High Stage Cooling | SW1-1 | SW1-2 | BHP | 0.63 | 0.64 | 0.66 | 0.67 | 0.68 | 0.69 | 0.70 | 0.71 | 0.73 | 0.74 |
| | | | | ON | ON | | | | | | | | | | | |
| | | | High Stage Heating | SW2-1 | SW2-2 | Gas Heat Rise (°F) | 44 | 45 | 46 | 47 | 48 | 49 | 50 | 51 | 53 | 54 |
| | | | | ON | ON | | | | | | | | | | | |
| | | | High Static Cooling* | SW2-8 | | Gas Heat Rise (°C) | 24 | 25 | 25 | 26 | 27 | 27 | 28 | 29 | 29 | 30 |
| | | | | OFF | | | 14 | 14 | 14 | 15 | 15 | 15 | 15 | 16 | 16 | 17 |
| | | 9 | High Static Cooling | SW2-8 | | CFM | 1969 | 1939 | 1909 | 1881 | 1852 | 1817 | 1781 | 1748 | 1710 | 1613 |
| | | | | ON | | BHP | 0.66 | 0.67 | 0.69 | 0.71 | 0.72 | 0.74 | 0.75 | 0.76 | 0.77 | 0.73 |

Manufacturer reserves the right to change, at any time, specifications and designs without notice and without obligations.

**Table 9 – Dry Coil Air Delivery** - Horizontal and Downflow Discharge Sizes 24-60 208/230 VAC - 1 Phase (Continued)**

| Unit Size | Heating Rise °F (°C) | Motor Speed | Allowable Functions | Motor Speed Selection | | ESP (in. W.C.) | 0.1 | 0.2 | 0.3 | 0.4 | 0.5 | 0.6 | 0.7 | 0.8 | 0.9 | 1 |
|---|---|---|---|---|---|---|---|---|---|---|---|---|---|---|---|---|
| 60130 | 35 - 65 (19 - 36) | 1 | Continuous Fan* | SW2-5 | SW2-6 | CFM | 803 | 734 | 661 | 595 | 532 | 464 | 402 | 346 | 284 | 234 |
| | | | | OFF | OFF | | | | | | | | | | | |
| | | | Dehumidification Low | SW1-7 | SW1-8 | | | | | | | | | | | |
| | | | | OFF | OFF | | | | | | | | | | | |
| | | | Low Stage Cooling | SW1-3 | SW1-4 | BHP | 0.08 | 0.09 | 0.09 | 0.10 | 0.11 | 0.11 | 0.12 | 0.13 | 0.13 | 0.14 |
| | | | | OFF | OFF | | | | | | | | | | | |
| | | | Low Stage Heating | SW2-5 | SW2-6 | Gas Heat Rise (°F) | NA | NA | NA | NA | NA | NA | NA | NA | NA | NA |
| | | | | OFF | OFF | Gas Heat Rise (°C) | NA | NA | NA | NA | NA | NA | NA | NA | NA | NA |
| | | 2 | Continuous Fan | SW2-5 | SW2-6 | CFM | 897 | 829 | 764 | 699 | 641 | 583 | 521 | 463 | 407 | 356 |
| | | | | ON | OFF | | | | | | | | | | | |
| | | | Dehumidification Low | SW1-7 | SW1-8 | | | | | | | | | | | |
| | | | | ON | OFF | | | | | | | | | | | |
| | | | Low Stage Cooling | SW1-3 | SW1-4 | BHP | 0.10 | 0.11 | 0.11 | 0.12 | 0.13 | 0.14 | 0.14 | 0.15 | 0.16 | 0.16 |
| | | | | ON | OFF | | | | | | | | | | | |
| | | | Low Stage Heating | SW2-5 | SW2-6 | Gas Heat Rise (°F) | NA | NA | NA | NA | NA | NA | NA | NA | NA | NA |
| | | | | ON | OFF | Gas Heat Rise (°C) | NA | NA | NA | NA | NA | NA | NA | NA | NA | NA |
| | | 3 | Continuous Fan | SW2-5 | SW2-6 | CFM | 1261 | 1218 | 1163 | 1115 | 1070 | 1020 | 971 | 917 | 872 | 829 |
| | | | | OFF | ON | | | | | | | | | | | |
| | | | Dehumidification Low | SW1-7 | SW1-8 | | | | | | | | | | | |
| | | | | OFF | ON | | | | | | | | | | | |
| | | | Low Stage Cooling | SW1-3 | SW1-4 | BHP | 0.21 | 0.22 | 0.23 | 0.24 | 0.25 | 0.26 | 0.27 | 0.28 | 0.29 | 0.30 |
| | | | | OFF | ON | | | | | | | | | | | |
| | | | Low Stage Heating* | SW2-5 | SW2-6 | Gas Heat Rise (°F) | 50 | 52 | 54 | 56 | 59 | 62 | 65 | NA | NA | NA |
| | | | | OFF | ON | Gas Heat Rise (°C) | 28 | 29 | 30 | 31 | 33 | 34 | 36 | NA | NA | NA |
| | | 4 | Continuous Fan | SW2-5 | SW2-6 | CFM | 1507 | 1472 | 1434 | 1388 | 1346 | 1307 | 1270 | 1227 | 1183 | 1142 |
| | | | | OFF | ON | | | | | | | | | | | |
| | | | Dehumidification Low | SW1-7 | SW1-8 | | | | | | | | | | | |
| | | | | OFF | ON | | | | | | | | | | | |
| | | | Low Stage Cooling* | SW1-3 | SW1-4 | BHP | 0.32 | 0.34 | 0.35 | 0.36 | 0.37 | 0.38 | 0.39 | 0.40 | 0.41 | 0.42 |
| | | | | OFF | ON | | | | | | | | | | | |
| | | | Low Stage Heating | SW2-5 | SW2-6 | Gas Heat Rise (°F) | 42 | 43 | 44 | 45 | 47 | 48 | 50 | 51 | 53 | 55 |
| | | | | OFF | ON | Gas Heat Rise (°C) | 23 | 24 | 24 | 25 | 26 | 27 | 28 | 28 | 30 | 31 |

Manufacturer reserves the right to change, at any time, specifications and designs without notice and without obligations.

**Table 9 – Dry Coil Air Delivery** - Horizontal and Downflow Discharge Sizes 24-60 208/230 VAC - 1 Phase (Continued)**

| Unit Size | Heating Rise °F (°C) | Motor Speed | Allowable Functions | Motor Speed Selection | | | ESP (in. W.C.) | | | | | | | | | |
|---|---|---|---|---|---|---|---|---|---|---|---|---|---|---|---|---|
| | | | | | | | 0.1 | 0.2 | 0.3 | 0.4 | 0.5 | 0.6 | 0.7 | 0.8 | 0.9 | 1 |
| 60130 | 35 - 65 (19 - 36) | 5 | Dehumidification High | SW1-5 | SW1-6 | CFM | 1401 | 1364 | 1317 | 1271 | 1228 | 1189 | 1143 | 1097 | 1054 | 1012 |
| | | | | OFF | OFF | | | | | | | | | | | |
| | | | High Stage Cooling | SW1-1 | SW1-2 | BHP | 0.27 | 0.28 | 0.30 | 0.31 | 0.32 | 0.32 | 0.33 | 0.34 | 0.35 | 0.36 |
| | | | | OFF | OFF | | | | | | | | | | | |
| | | | High Stage Heating | SW2-1 | SW2-2 | Gas Heat Rise (°F) | NA | NA | NA | NA | NA | NA | NA | NA | NA | NA |
| | | | | OFF | OFF | Gas Heat Rise (°C) | NA | NA | NA | NA | NA | NA | NA | NA | NA | NA |
| | | 6 | Dehumidification High | SW1-5 | SW1-6 | CFM | 1683 | 1648 | 1615 | 1579 | 1536 | 1497 | 1462 | 1427 | 1393 | 1355 |
| | | | | ON | OFF | | | | | | | | | | | |
| | | | High Stage Cooling | SW1-1 | SW1-2 | BHP | 0.45 | 0.46 | 0.47 | 0.49 | 0.50 | 0.51 | 0.52 | 0.53 | 0.54 | 0.55 |
| | | | | ON | OFF | | | | | | | | | | | |
| | | | High Stage Heating | SW2-1 | SW2-2 | Gas Heat Rise (°F) | 56 | 57 | 59 | 60 | 62 | 63 | 65 | NA | NA | NA |
| | | | | ON | OFF | Gas Heat Rise (°C) | 31 | 32 | 33 | 33 | 34 | 35 | 36 | NA | NA | NA |
| | | 7 | Dehumidification High | SW1-5 | SW1-6 | CFM | 1933 | 1901 | 1871 | 1843 | 1811 | 1775 | 1740 | 1706 | 1675 | 1606 |
| | | | | OFF | ON | | | | | | | | | | | |
| | | | High Stage Cooling | SW1-1 | SW1-2 | BHP | 0.63 | 0.64 | 0.66 | 0.68 | 0.69 | 0.70 | 0.72 | 0.73 | 0.75 | 0.73 |
| | | | | OFF | ON | | | | | | | | | | | |
| | | | High Stage Heating* | SW2-1 | SW2-2 | Gas Heat Rise (°F) | 49 | 50 | 51 | 51 | 52 | 53 | 54 | 55 | 56 | 59 |
| | | | | OFF | ON | Gas Heat Rise (°C) | 27 | 28 | 28 | 28 | 29 | 30 | 30 | 31 | 31 | 33 |
| | | 8 | Dehumidification High | SW1-5 | SW1-6 | CFM | 1943 | 1905 | 1867 | 1818 | 1787 | 1743 | 1705 | 1664 | 1624 | 1587 |
| | | | | ON | ON | | | | | | | | | | | |
| | | | High Stage Cooling* | SW1-1 | SW1-2 | BHP | 0.63 | 0.64 | 0.66 | 0.67 | 0.68 | 0.69 | 0.70 | 0.71 | 0.73 | 0.74 |
| | | | | ON | ON | | | | | | | | | | | |
| | | | High Stage Heating | SW2-1 | SW2-2 | Gas Heat Rise (°F) | 49 | 50 | 51 | 52 | 53 | 54 | 55 | 57 | 58 | 60 |
| | | | | ON | ON | | | | | | | | | | | |
| | | | High Static Cooling | SW2-8 | | Gas Heat Rise (°C) | 27 | 28 | 28 | 29 | 29 | 30 | 31 | 32 | 32 | 33 |
| | | | | OFF | | | 15 | 15 | 16 | 16 | 16 | 17 | 17 | 18 | 18 | 18 |
| | | 9 | High Static Cooling | SW2-8 | | CFM | 1969 | 1939 | 1909 | 1881 | 1852 | 1817 | 1781 | 1748 | 1710 | 1613 |
| | | | | ON | | BHP | 0.66 | 0.67 | 0.69 | 0.71 | 0.72 | 0.74 | 0.75 | 0.76 | 0.77 | 0.73 |

Shaded areas indicate speed/statc combinations that are permitted for dehumidification speed.

Notes:

* Air delivery values are without air filter and are for dry coil (See Wet Coil Pressure Drop Table).

[1] Factory-shipped low stage cooling speed

[2] Factory-shipped high stage cooling speed

[3] Factory-shipped low stage gas heating speed

[4] Factory-shipped high stage gas heating speed

"NA" = Not allowed for particular gas heating speed

Manufacturer reserves the right to change, at any time, specifications and designs without notice and without obligations.

## Table 10 – Wet Coil Pressure Drop (IN. W.C.)

| Unit Size | Standard CFM (SCFM) | | | | | | | | | | | | | | | | |
|---|---|---|---|---|---|---|---|---|---|---|---|---|---|---|---|---|---|
| | 500 | 600 | 700 | 800 | 900 | 1000 | 1100 | 1200 | 1300 | 1400 | 1500 | 1600 | 1700 | 1800 | 1900 | 2000 | 2100 |
| 24 | 0.02 | 0.03 | 0.04 | 0.04 | 0.05 | 0.06 | | | | | | | | | | | |
| 36 | | | | 0.03 | 0.04 | 0.05 | 0.05 | 0.06 | 0.07 | 0.08 | 0.08 | 0.09 | 0.10 | 0.11 | | | |
| 48 | | | | | | 0.03 | 0.04 | 0.04 | 0.05 | 0.06 | 0.06 | 0.07 | 0.08 | 0.09 | 0.10 | 0.11 | 0.12 |
| 60 | | | | | | 0.03 | 0.04 | 0.04 | 0.05 | 0.06 | 0.06 | 0.07 | 0.08 | 0.09 | 0.10 | 0.11 | 0.12 |

## Table 11 – Economizer with 1-in. Filter Pressure Drop (IN. W.C.)

| Filter Size in. (mm) | Cooling Tons | Standard CFM (SCFM) | | | | | | | | | | | | | | | | |
|---|---|---|---|---|---|---|---|---|---|---|---|---|---|---|---|---|---|---|
| | | 500 | 600 | 700 | 800 | 900 | 1000 | 1100 | 1200 | 1300 | 1400 | 1500 | 1600 | 1700 | 1800 | 1900 | 2000 | 2100 |
| 600-1400 CFM 12x20x1+12x20x1 (305x508x25+305x508x25) | 2.0 | 0.04 | 0.05 | 0.07 | 0.09 | 0.14 | 0.16 | 0.18 | 0.25 | - | - | - | - | - | - | - | - | - |
| 1200-1800 CFM 16x24x1+14x24x1 (406x610x25+356x610x25) | 3.0 | - | - | - | 0.04 | 0.06 | 0.07 | 0.08 | 0.10 | 0.11 | 0.12 | 0.13 | 0.14 | 0.16 | 0.16 | - | - | - |
| 1500-2200 CFM 16x24x1+18x24x1 (406x610x25+457x610x25) | 4.0 | - | - | - | - | - | - | 0.08 | 0.10 | 0.11 | 0.13 | 0.15 | 0.17 | 0.18 | 0.20 | 0.21 | 0.22 | - |
| 1500-2200 CFM 16x24x1+18x24x1 (406x610x25+457x610x25) | 5.0 | - | - | - | - | - | - | 0.08 | 0.10 | 0.11 | 0.13 | 0.15 | 0.17 | 0.18 | 0.20 | 0.21 | 0.22 | 0.23 |

## Table 12 – Filter Pressure Drop Table (IN. W.C.)

| Filter Size in. (mm) | Cooling Tons | Standard CFM (SCFM) | | | | | | | | | | | | | | | | |
|---|---|---|---|---|---|---|---|---|---|---|---|---|---|---|---|---|---|---|
| | | 500 | 600 | 700 | 800 | 900 | 1000 | 1100 | 1200 | 1300 | 1400 | 1500 | 1600 | 1700 | 1800 | 1900 | 2000 | 2100 |
| 600-1400 CFM 12x20x1+12x20x1 (305x508x25+305x508x25) | 2.0 | 0.02 | 0.03 | 0.05 | 0.06 | 0.08 | 0.10 | 0.11 | 0.13 | - | - | - | - | - | - | - | - | - |
| 1200-1800 CFM 16x24x1+14x24x1 (406x610x25+356x610x25) | 3.0 | - | - | - | 0.03 | 0.03 | 0.04 | 0.05 | 0.06 | 0.07 | 0.08 | 0.09 | 0.09 | 0.10 | 0.11 | - | - | - |
| 1500-2200 CFM 16x24x1+18x24x1 (406x610x25+457x610x25) | 4.0 | - | - | - | - | - | - | 0.02 | 0.03 | 0.03 | 0.04 | 0.04 | 0.06 | 0.08 | 0.10 | 0.11 | 0.13 | - |
| 1500-2200 CFM 16x24x1+18x24x1 (406x610x25+457x610x25) | 5.0 | - | - | - | - | - | - | 0.02 | 0.03 | 0.03 | 0.04 | 0.04 | 0.06 | 0.08 | 0.10 | 0.11 | 0.13 | 0.14 |

Manufacturer reserves the right to change, at any time, specifications and designs without notice and without obligations.

## Maintenance

To ensure continuing high performance and to minimize the possibility of premature equipment failure, periodic maintenance must be performed on this equipment. This unit should be inspected at least once each year by a qualified service person. To troubleshoot unit, refer to Table 13 - Table 15, Troubleshooting Chart.

NOTE TO EQUIPMENT OWNER: Consult your local dealer about the availability of a maintenance contract.

**⚠ WARNING**

**PERSONAL INJURY AND UNIT DAMAGE HAZARD**

Failure to follow this warning could result in personal injury or death and unit component damage.

The ability to properly perform maintenance on this equipment requires certain expertise, mechanical skills, tools and equipment. If you do not possess these, do not attempt to perform any maintenance on this equipment, other than those procedures recommended in the Owner's Manual.

**⚠ WARNING**

**ELECTRICAL SHOCK HAZARD**

Failure to follow these warnings could result in personal injury or death:

1. Turn off electrical power to the unit and install lock out tag before performing any maintenance or service on this unit.
2. Use extreme caution when removing panels and parts.
3. Never place anything combustible either on or in contact with the unit.

**⚠ CAUTION**

**UNIT OPERATION HAZARD**

Failure to follow this caution may result in improper operation.

Errors made when reconnecting wires may cause improper and dangerous operation. Label all wires prior to disconnecting when servicing.

**⚠ WARNING**

**ENVIRONMENTAL HAZARD**

Failure to follow this caution may result in environmental pollution.

Remove and re-cycle all components or materials (i.e. oil, refrigerant, etc) before unit final disposal.

The minimum maintenance requirements for this equipment are as follows:

1. Inspect air filter(s) each month. Clean or replace when necessary.
2. Inspect indoor coil, drain pan, and condensate drain each cooling season for cleanliness. Clean when necessary.
3. Inspect blower motor and wheel for cleanliness at the beginning of each heating and cooling season. Clean when necessary. For first heating and cooling season, inspect blower wheel bi-monthly to determine proper cleaning frequency.
4. Check electrical connections for tightness and controls for proper operation each heating and cooling season. Service when necessary.
5. Ensure electric wires are not in contact with refrigerant tubing or sharp metal edges.
6. Check and inspect heating section before each heating season. Clean and adjust when necessary.
7. Check flue hood and remove any obstructions, if necessary.

### Air Filter

**IMPORTANT:** Never operate the unit without a suitable air filter in the return-air duct system. Always replace the filter with the same dimensional size and type as originally installed. See Table 1 for recommended filter sizes.

Inspect air filter(s) at least once each month and replace (throwaway-type) or clean (cleanable-type) at least twice during each cooling season and twice during the heating season, or whenever the filter becomes clogged with dust and lint.

### Indoor Blower and Motor

**NOTE:** All motors are pre-lubricated. Do not attempt to lubricate these motors.

For longer life, operating economy, and continuing efficiency, clean accumulated dirt and grease from the blower wheel and motor annually.

**⚠ WARNING**

**ELECTRICAL SHOCK HAZARD**

Failure to follow this warning could result in personal injury or death.

Disconnect and tag electrical power to the unit before cleaning the blower motor and wheel.

To clean the blower motor and wheel:

1. Remove and disassemble blower assembly as follows:
   a. Remove blower access panel (see Fig. 18).
   b. Disconnect 5 pin plug and 4 pin plug from indoor blower motor. Remove capacitor if required.
   c. On all units remove blower assembly from unit. Remove screws securing blower to blower partition and slide assembly out. Be careful not to tear insulation in blower compartment.
   d. Ensure proper reassembly by marking blower wheel and motor in relation to blower housing before disassembly.
   e. Loosen setscrew(s) that secures wheel to motor shaft, remove screws that secure motor mount brackets to housing, and slide motor and motor mount out of housing.
2. Remove and clean blower wheel as follows:
   a. Ensure proper reassembly by marking wheel orientation.
   b. Lift wheel from housing. When handling and/or cleaning blower wheel, be sure not to disturb balance weights (clips) on blower wheel vanes.
   c. Remove caked-on dirt from wheel and housing with a brush. Remove lint and/or dirt accumulations from wheel and housing with vacuum cleaner, using soft brush attachment. Remove grease and oil with mild solvent.
   d. Reassemble wheel into housing.
   e. Reassemble motor into housing. Be sure setscrews are tightened on motor shaft flats and not on round part of shaft. Reinstall blower into unit. Reinstall capacitor.
   f. Connect 5 pin plug and 4 pin plug to indoor blower motor.
   g. Reinstall blower access panel (see Fig. 18).
3. Restore electrical power to unit. Start unit and check for proper blower rotation and motor speeds during heating and cooling cycles.

### Induced Draft (combustion air) Blower Assembly

The induced-draft blower assembly consists of the inducer motor, the blower housing, and the induced-draft blower wheel.

Clean periodically to assure proper airflow and heating efficiency. Inspect blower wheel every fall and periodically during the heating

season. For the first heating season, inspect blower wheel bimonthly to determine proper cleaning frequency.

To inspect blower wheel, remove draft hood assembly. Shine a flashlight into opening to inspect wheel. If cleaning is required, remove induced-draft blower assembly as follows:

1. Remove control access panel (See Fig. 18).
2. Remove the 5 screws that attach induced-draft blower assembly to the flue collector box cover.
3. Slide the assembly out of the unit. (See Fig. 20). Clean the blower wheel. If additional cleaning is required, continue with Steps 4 and 5.
4. To remove blower wheel, remove 2 setscrews.
5. To remove inducer motor, remove screws that hold the inducer motor to the blower housing.
6. To reinstall, reverse the procedure outlined above.

## Flue Gas Passageways

To inspect the flue collector box and upper areas of the heat exchanger:

1. Remove the induced draft blower assembly according to directions in the Induced Draft Blower Assembly section.
2. Remove the 11 screws holding the flue collector box cover (See Fig. 17) to the heat exchanger assembly. Inspect the heat exchangers.
3. Clean all surfaces, as required, using a wire brush.

## Limit Switch

Remove blower access panel (see Fig. 18). Limit switch(es) are located on the fan partition.

## Burner Ignition

Unit is equipped with a direct spark ignition 100 percent lockout system. Ignition module (IGC) is located in the control box (See Fig. 17). Module contains a self-diagnostic LED. During servicing, refer to label diagram or Table 6 in these instructions for LED interpretation.

If lockout occurs, unit may be reset by either momentarily interrupting power supply to unit or by turning selector switch to OFF position at the thermostat.

## Main Burners

At the beginning of each heating season, inspect for deterioration or blockage due to corrosion or other causes. Observe the main burner flames and adjust, if necessary.

Removal of Gas Train

To remove the gas train for servicing:

1. Shut off main gas valve.
2. Shut off power to unit and install lockout tag.
3. Remove control access panel (See Fig. 18).
4. Disconnect gas piping at unit gas valve.
5. Remove fan partition mounting bracket (2 screws located on the left side of control compartment on the fan partition panel). Slide bracket forward, bottom first, to remove. (See Fig. 17.)
6. Remove wires connected to gas valve. Mark each wire.
7. Remove the mounting screw that attaches the burner rack to the unit base (See Fig. 17).
8. Partially slide the burner rack out of the unit (see Fig. 17 and Fig. 20). Remove ignitor and sensor wires at the burner assembly. Remove wires to rollout switch.
9. Slide the burner rack out of the unit (See Fig. 17 and Fig. 20).
10. To reinstall, reverse the procedure outlined above.
11. Check all connections for leaks.

**⚠ WARNING**

**FIRE, EXPLOSION HAZARD**

Failure to follow this warning could result in personal injury, death or property damage.

Use a commercially available soap solution made specifically for the detection of leaks to check all connections. A fire or explosion may result causing property damage, personal injury or loss of life.

## Outdoor Coil, Indoor Coil, and Condensate Drain Pan

Inspect the condenser coil, evaporator coil, and condensate drain pan at least once each year.

The coils are easily cleaned when dry; therefore, inspect and clean the coils either before or after each cooling season. Remove all obstructions, including weeds and shrubs, that interfere with the airflow through the condenser coil.

Straighten bent fins with a fin comb. If coated with dirt or lint, clean the coils with a vacuum cleaner, using the soft brush attachment. Be careful not to bend the fins. If coated with oil or grease, clean the coils with a mild detergent and water solution. Rinse coils with clear water, using a garden hose. Be careful not to splash water on motors, insulation, wiring, or air filter(s). For best results, spray condenser coil fins from inside to outside the unit. On units with an outer and inner condenser coil, be sure to clean between the coils. Be sure to flush all dirt and debris from the unit base.

Inspect the drain pan and condensate drain line when inspecting the coils. Clean the drain pan and condensate drain by removing all foreign matter from the pan. Flush the pan and drain trough with clear water. Do not splash water on the insulation, motor, wiring, or air filter(s). If the drain trough is restricted, clear it with a “plumbers snake” or similar probe device.

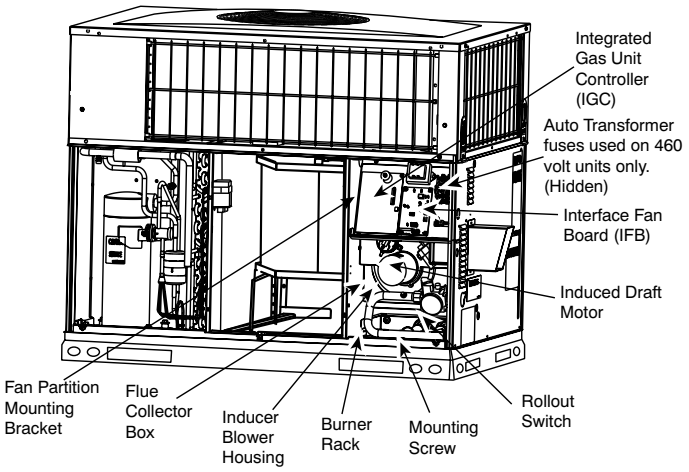


**Fig. 17 – Blower Housing and Flue Collector Box**

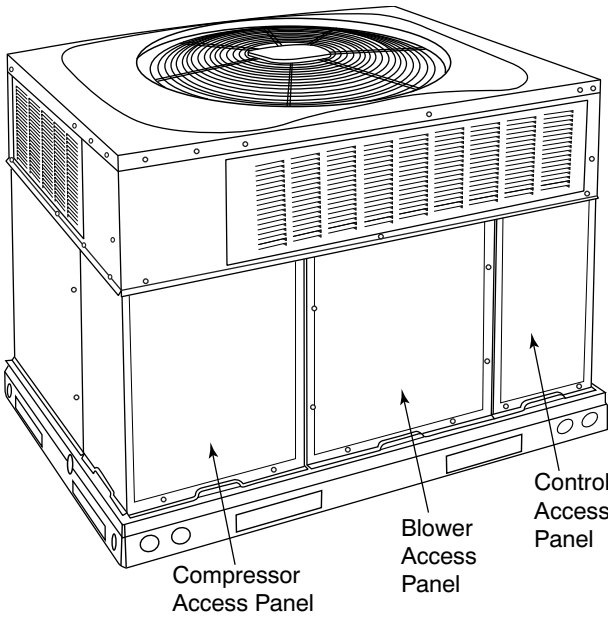


**Fig. 18 – Unit Access Panels**

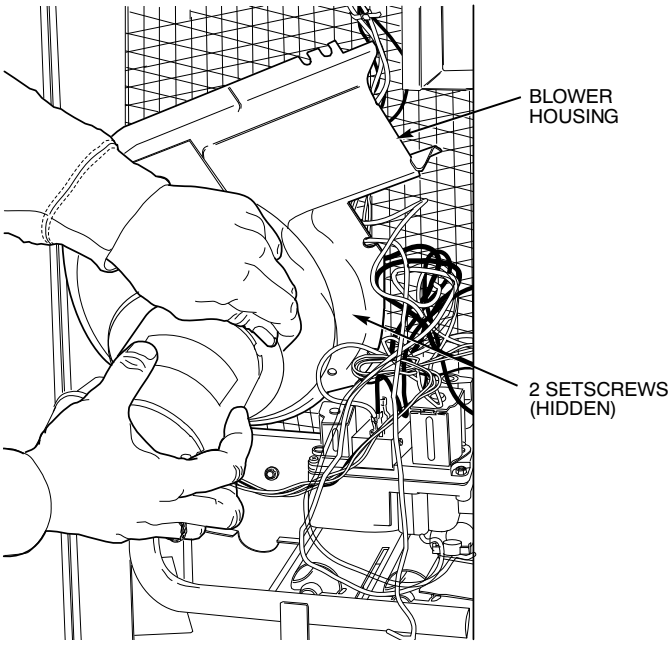


**Fig. 19 – Removal of Motor and Blower Wheel**

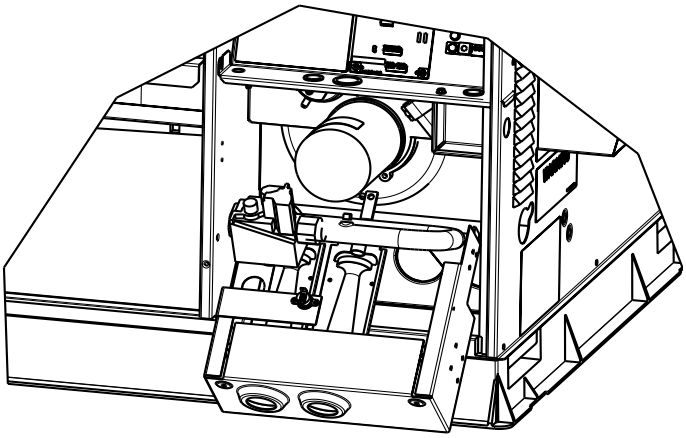


**Fig. 20 – Burner Rack Removed**

## Outdoor Fan

**CAUTION**

**UNIT OPERATION HAZARD**

Failure to follow this caution may result in damage to unit components.

Keep the condenser fan free from all obstructions to ensure proper cooling operation. Never place articles on top of the unit.

1. Remove 6 screws holding outdoor grille and motor to top cover.
2. Turn motor/grille assembly upside down on top cover to expose fan blade.
3. Inspect the fan blades for cracks or bends.
4. If fan needs to be removed, loosen setscrew and slide fan off motor shaft.
5. When replacing fan blade, position blade as shown in Fig. 21.
6. Ensure that setscrew engages the flat area on the motor shaft when tightening.
7. Replace grille.

## Electrical Controls and Wiring

Inspect and check the electrical controls and wiring annually. Be sure to turn off the electrical power to the unit.

Remove access panels (see Fig. 18) to locate all the electrical controls and wiring. Check all electrical connections for tightness. Tighten all screw connections. If any smoky or burned connections are noticed, disassemble the connection, clean all the parts, re-strip the wire end and reassemble the connection properly and securely.

After inspecting the electrical controls and wiring, replace all the panels. Start the unit, and observe at least one complete cooling cycle to ensure proper operation. If discrepancies are observed in operating cycle, or if a suspected malfunction has occurred, check each electrical component with the proper electrical instrumentation. Refer to the unit wiring label when making these checks.

## Refrigerant Circuit

Annually inspect all refrigerant tubing connections and the unit base for oil accumulations.

**WARNING**

**EXPLOSION, SAFETY AND ENVIRONMENTAL HAZARD**

Failure to follow this warning could result in personal injury, death or property damage.

System under pressure. Relieve pressure and recover all refrigerant before system repair or final unit disposal. Use all service ports and open all flow-control devices, including solenoid valves.

If low cooling performance is suspected, leak-test all refrigerant tubing using an electronic leak-detector, halide torch, or liquid-soap solution. If a refrigerant leak is detected, refer to the Check for Refrigerant Leaks section.

If no refrigerant leaks are found and low cooling performance is suspected, refer to the Checking and Adjusting Refrigerant Charge section.

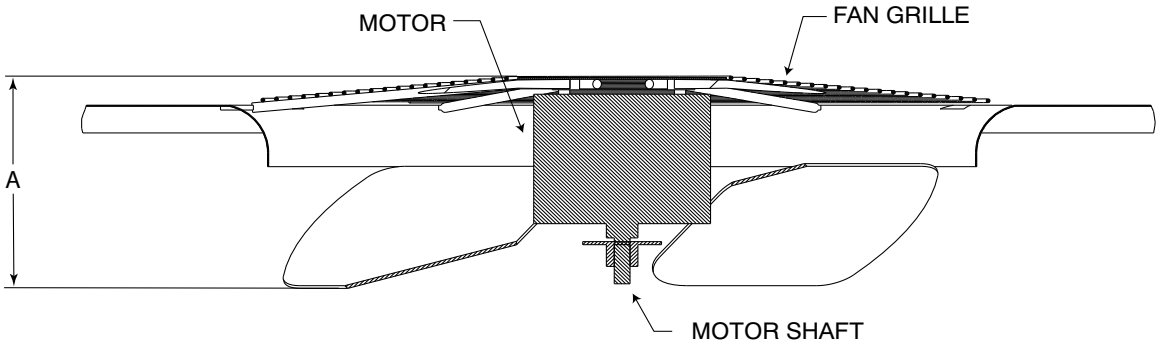


A08505

MAX DISTANCE BETWEEN TOP OF FAN GRILLE AND BOTTOM OF FAN BLADE

| Size | "A" | |
|---|---|---|
| | IN. | mm |
| 24 | 9.5 | 241 |
| 36 | 7.6 | 193 |
| 48 | 7.6 | 193 |
| 60 | 7.6 | 193 |

**Fig. 21 – Fan Blade Position**

## Gas Input

The gas input does not require checking unless improper heating performance is suspected. If a problem exists, refer to the Start-Up section.

## Evaporator Airflow

The heating and/or cooling airflow does not require checking unless improper performance is suspected. If a problem exists, be sure that all supply- and return-air grilles are open and free from obstructions, and that the air filter is clean. When necessary, refer to the Indoor Airflow and Airflow Adjustments section to check the system airflow.

## Defrost Thermostat

The defrost thermostat is usually located on the lowest liquid leaving circuit of the left (See Fig. 22). The thermostat closes at 32°F (0°C) and opens at 65°F (18°C)

The defrost thermostat signals heat pump that conditions are right for defrost or that conditions have changed to terminate defrost. It is a thermally actuated switch clamped to outdoor coil to sense its temperature. Normal temperature range is closed at 32° ± 3°F (0 ± 1.7°C) and open at 65° ± 5°F (18 ± 2.8°C).

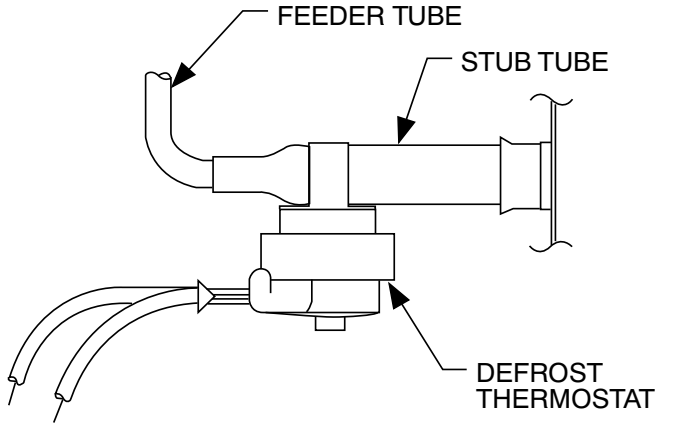


C99029

**Fig. 22 – Defrost Thermostat Location**

## Puron Items

## Metering Device (Thermostatic Expansion Valve & Piston)

This unit uses both a hard shutoff, balance port TXV in the indoor coil and a piston in each side of the outdoor coil. The TXV maintains a constant superheat at the evaporator coil exit (cooling mode) resulting in higher overall system efficiency.

## Pressure Switches

Pressure switches are protective devices wired into control circuit (low voltage). They shut off compressor if abnormally high or low pressures are present in the refrigeration circuit. These pressure switches are specifically designed to operate with Puron (R-410A) systems. R-22 pressure switches must not be used as replacements for the Puron (R-410A) system.

## Loss of Charge Switch

This switch is located on the liquid line and protects against low suction pressures caused by such events as loss of charge, low airflow across indoor coil, dirty filters, etc. It opens on a pressure drop at about 20 psig. If system pressure is above this, switch should be closed. To check switch:

1. Turn off all power to unit.
2. Disconnect leads on switch.
3. Apply ohm meter leads across switch. You should have continuity on a good switch.

**NOTE:** Because these switches are attached to refrigeration system under pressure, it is not advisable to remove this device for troubleshooting unless you are reasonably certain that a problem exists. If switch must be removed, remove and recover all system charge so that pressure gauges read 0 psig. Never open system without breaking vacuum with dry nitrogen.

## High-Pressure Switch

The high-pressure switch is located in the discharge line and protects against excessive condenser coil pressure. It opens at 650 psig.

High pressure may be caused by a dirty outdoor coil, failed fan motor, or outdoor air recirculation. To check switch:

1. Turn off all power to unit.
2. Disconnect leads on switch.
3. Apply ohm meter leads across switch. You should have continuity on a good switch.

## Copeland Scroll Compressor (Puron Refrigerant)

The compressor used in this product is specifically designed to operate with Puron (R-410A) refrigerant and cannot be interchanged.

The compressor is an electrical (as well as mechanical) device. Exercise extreme caution when working near compressors. Power should be shut off, if possible, for most troubleshooting techniques. Refrigerants present additional safety hazards.

**⚠ WARNING**

**FIRE/EXPLOSION HAZARD**

Failure to follow this warning could result in personal injury or death and/or property damage.

Wear safety glasses and gloves when handling refrigerants. Keep torches and other ignition sources away from refrigerants and oils.

The scroll compressor pumps refrigerant throughout the system by the interaction of a stationary and an orbiting scroll. The scroll compressor has no dynamic suction or discharge valves, and it is more tolerant of stresses caused by debris, liquid slugging, and flooded starts. The compressor is equipped with a noise reducing shutdown device and an internal pressure relief port. The pressure relief port is a safety device, designed to protect against extreme high pressure. The relief port has an operating range between 550 (26.34 kPa) and 625 psig (29.93 kPa) differential pressure.

**⚠ WARNING**

**EXPLOSION, ENVIRONMENTAL SAFETY HAZARD**

Failure to follow this warning could result in personal injury, death or equipment damage.

This system uses Puron (R-410A) refrigerant which has higher operating pressures than R-22 and other refrigerants. No other refrigerant may be used in this system. Gauge set, hoses, and recovery system must be designed to handle Puron. If you are unsure, consult the equipment manufacturer.

## Refrigerant System

This information covers the refrigerant system including the compressor oil needed, servicing systems on roofs containing synthetic materials, the filter drier and refrigerant charging.

**Compressor Oil**

The Copeland scroll compressor uses 3MAF POE oil. If additional oil is needed, use Uniqema RL32-3MAF. If this oil is not available, use Copeland Ultra 32 CC or Mobil Arctic EAL22 CC. This oil is extremely hygroscopic, meaning it absorbs water readily. POE oils can absorb 15 times as much water as other oils designed for HCFC and CFC refrigerants. Take all necessary precautions to avoid exposure of the oil to the atmosphere.

## Servicing Systems on Roofs with Synthetic Materials

POE (polyolester) compressor lubricants are known to cause long term damage to some synthetic roofing materials.

Exposure, even if immediately cleaned up, may cause embrittlement (leading to cracking) to occur in one year or more. When performing any service that may risk exposure of compressor oil to the roof, take appropriate precautions to protect roofing. Procedures which risk oil leakage include, but are not limited to, compressor replacement, repairing refrigerant leaks, replacing refrigerant components such as filter drier, pressure switch, metering device, coil, accumulator, or reversing valve.

## Synthetic Roof Precautionary Procedure

1. Cover extended roof working area with an impermeable polyethylene (plastic) drip cloth or tarp. Cover an approximate 10 X 10 ft. (3.1 m X 3.1 m) area.
2. Cover area in front of the unit service panel with a terry cloth shop towel to absorb lubricant spills and prevent run-offs, and protect drop cloth from tears caused by tools or components.
3. Place terry cloth shop towel inside unit immediately under component(s) to be serviced and prevent lubricant run-offs through the louvered openings in the unit base.
4. Perform required service.
5. Remove and dispose of any oil contaminated material per local codes.

## Liquid Line Filter Drier

This filter drier is specifically designed to operate with Puron. Use only factory-authorized components. Filter drier must be replaced whenever the refrigerant system is opened. When removing a filter drier, use a tubing cutter to cut the drier from the system. Do not unsweat a filter drier from the system. Heat from unsweating will release moisture and contaminants from drier into system.

## Puron (R-410A) Refrigerant Charging

Refer to unit information plate and charging chart. Some R-410A refrigerant cylinders contain a dip tube to allow liquid refrigerant to flow from cylinder in upright position. For cylinders equipped with a dip tube, charge Puron units with cylinder in upright position and a commercial metering device in manifold hose. Charge refrigerant into suction-line.

# Troubleshooting

Use the Troubleshooting Guides (See Table 13 - Table 15) if problems occur with these units.

# Start-up Checklist

Use Start-Up checklist to ensure proper start-up procedures are followed.

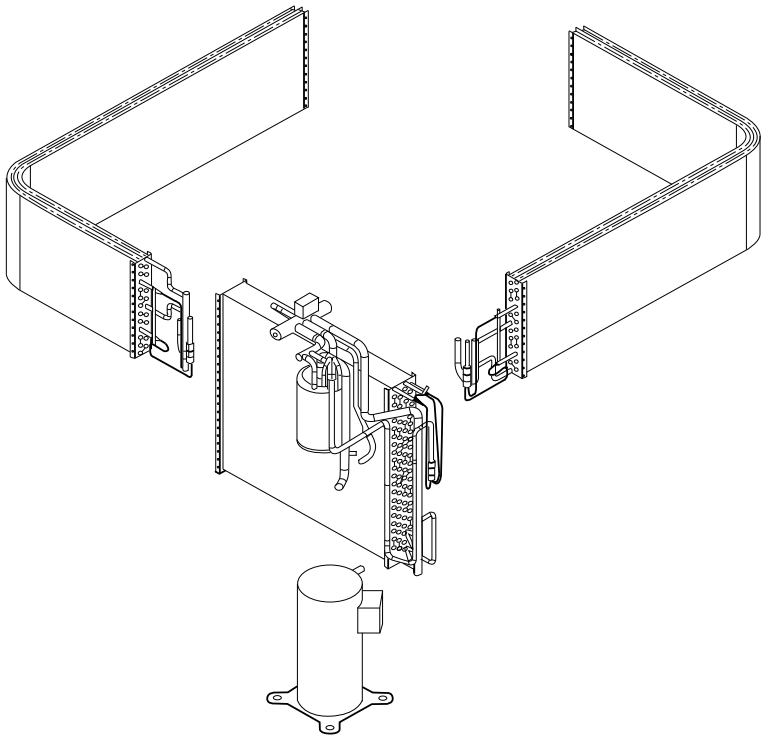

C99097

**Fig. 23 – Refrigerant Circuit**

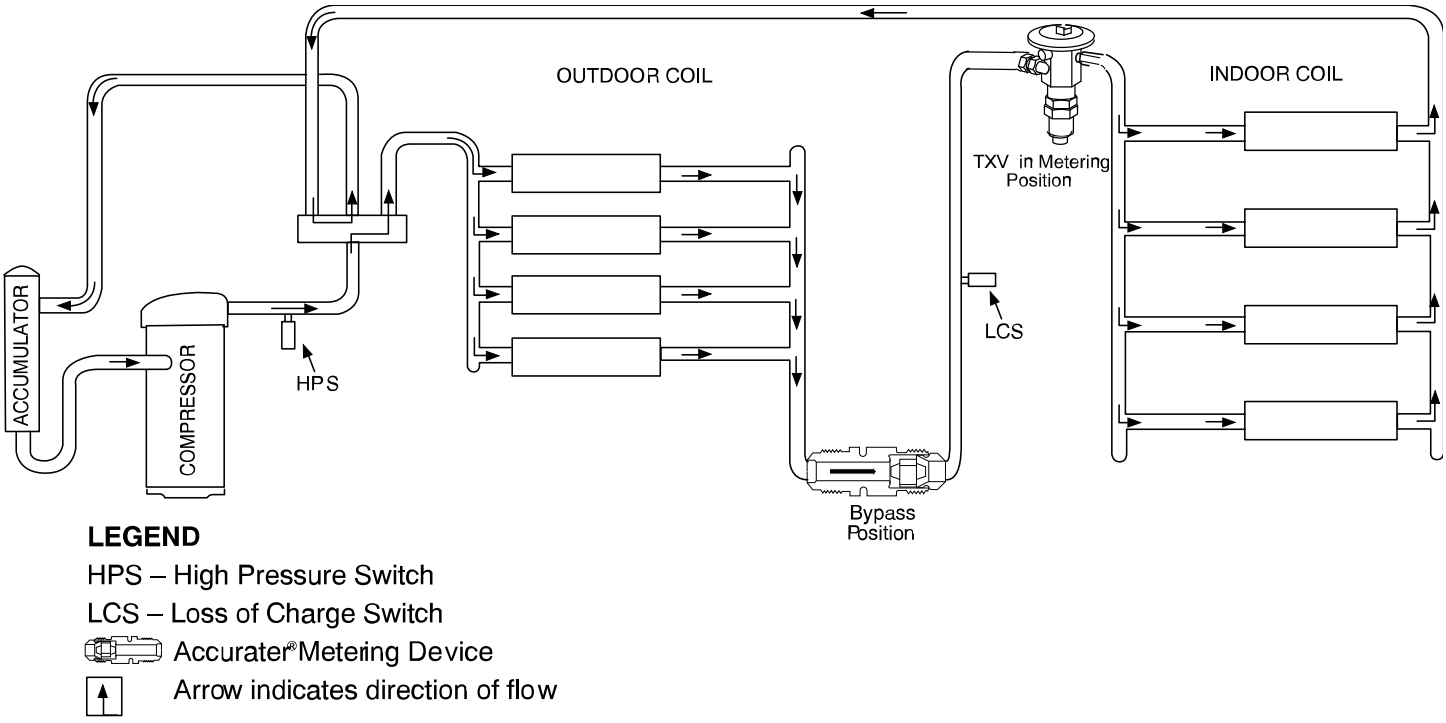


C03011

**Fig. 24 – Typical Heat Pump Operation, Cooling Mode**

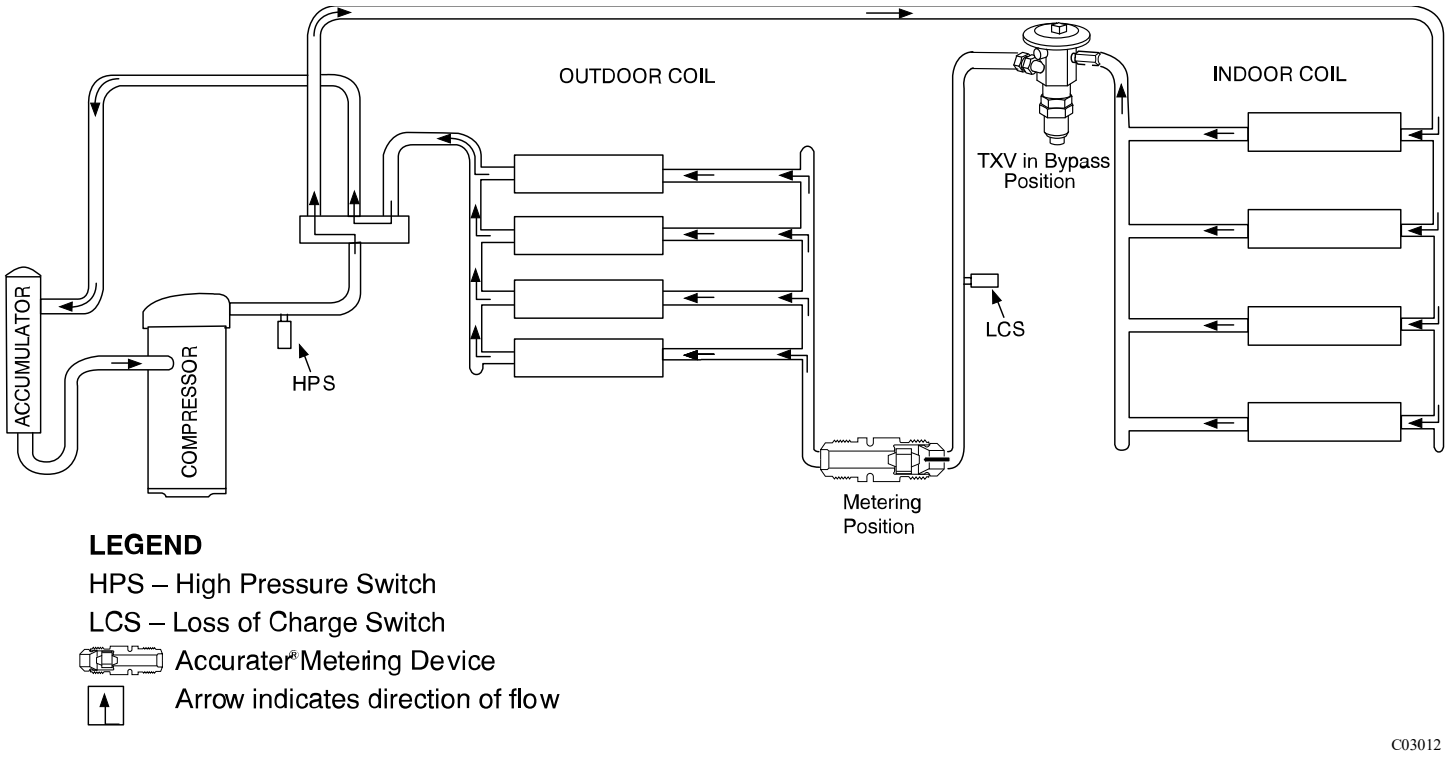


**Fig. 25 – Typical Heat Pump Operation, Heating Mode**

**Table 13 – Troubleshooting Chart**

| SYMPTOM | CAUSE | REMEDY |
|---|---|---|
| Compressor and condenser fan will not start. | Power failure | Call power company |
| | Fuse blown or circuit breaker tripped | Replace fuse or reset circuit breaker |
| | Defective contactor, transformer, or high-pressure, loss-of-charge or low-pressure switch | Replace component |
| | Insufficient line voltage | Determine cause and correct |
| | Incorrect or faulty wiring | Check wiring diagram and rewire correctly |
| | Thermostat setting too high | Lower thermostat temperature setting below room temperature |
| Compressor will not start but condenser fan runs | Faulty wiring or loose connections in compressor circuit | Check wiring and repair or replace |
| | Compressor motor burned out, seized, or internal overload open | Determine cause<br>Replace compressor |
| | Defective run/start capacitor, overload, start relay | Determine cause and replace |
| | Low input voltage | Determine cause and correct |
| Compressor cycles (other than normally satisfying thermostat) | Refrigerant overcharge or undercharge | Recover refrigerant, evacuate system, and recharge to capacities shown on rating plate |
| | Defective compressor | Replace and determine cause |
| | Insufficient line voltage | Determine cause and correct |
| | Blocked outdoor coil | Determine cause and correct |
| | Defective run/start capacitor | Determine cause and replace |
| | Faulty outdoor fan motor or capacitor | Replace |
| | Restriction in refrigerant system | Locate restriction and remove |
| Compressor operates continuously | Dirty air filter | Replace filter |
| | Unit undersized for load | Decrease load or increase unit size |
| | Thermostat temperature set too low | Reset thermostat |
| | Low refrigerant charge | Locate leak, repair, and recharge |
| | Air in system | Recover refrigerant, evacuate system, and recharge |
| | Outdoor coil dirty or restricted | Clean coil or remove restriction |
| Excessive head pressure | Dirty air filter | Replace filter |
| | Dirty condenser coil | Clean coil |
| | Refrigerant overcharged | Recover excess refrigerant |
| | Air in system | Recover refrigerant, evacuate system, and recharge |
| | Condenser air restricted or air short-cycling | Determine cause and correct |
| Head pressure too low | Low refrigerant charge | Check for leaks, repair, and recharge. |
| | Restriction in liquid tube | Remove restriction |
| Excessive suction pressure | Refrigerant overcharged | Recover excess refrigerant |
| Suction pressure too low | Dirty air filter | Replace filter |
| | Low refrigerant charge | Check for leaks, repair and recharge |
| | Metering device or low side restricted | Remove source of restriction |
| | Insufficient evaporator airflow | Increase air quantity<br>Check filter–replace if necessary |
| | Temperature too low in conditioned area | Reset thermostat |
| | Outdoor ambient below 55°F (13°C) | Install low-ambient kit |
| | Filter drier restricted | Replace filter |

**Table 14 – Troubleshooting Guide–Heating**

| SYMPTOM | CAUSE | REMEDY |
|---|---|---|
| Burners will not ignite | Water in gas line | Drain. Install drip leg. |
| | No power to furnace | Check power supply fuses, wiring or circuit breaker. |
| | No 24-v power supply to control circuit | Check transformer.<br>NOTE: Some transformers have internal over-current protection that requires a cool-down period to reset. |
| | Mis-wired or loose connections | Check all wiring and wire nut connections |
| | Misaligned spark electrodes | Check flame ignition and sense electrode positioning.<br>Adjust as necessary. |
| | No gas at main burners | 1. Check gas line for air. Purge as necessary. NOTE: After purging gas line of air, wait at least 5 minutes for any gas to dissipate before attempting to light unit.<br>2. Check gas valve. |
| Inadequate heating | Dirty air filter | Clean or replace filter as necessary |
| | Gas input to furnace too low | Check gas pressure at manifold match with that on unit nameplate |
| | Unit undersized for application | Replace with proper unit or add additional unit |
| | Restricted airflow | Clean or replace filter. Remove any restriction. |
| | Limit switch cycles main burners | Check rotation of blower, temperature rise of unit. Adjust as necessary. |
| Poor flame characteristics | Incomplete combustion results in: Aldehyde odors, carbon monoxide, sooting flame, floating flame | 1. Tighten all screws around burner compartment<br>2. Cracked heat exchanger. Replace.<br>3. Unit over-fired. Reduce input (change orifices or adjust gas line or manifold pressure).<br>4. Check burner alignment.<br>5. Inspect heat exchanger for blockage. Clean as necessary. |

**Table 15 – Troubleshooting Guide–LED Status Codes**

| SYMPTOM | CAUSE | REMEDY |
|---|---|---|
| No Power or Hardware failure (LED OFF) | Loss of power to control module (IGC)*. | Check 5-amp fuse son IGC*, power to unit, 24-v circuit breaker, and transformer. Units without a 24-v circuit breaker have an internal overload in the 24-v transformer. If the overload trips, allow 10 minutes for automatic reset. |
| Check fuse, low voltage circuit (LED 1 flash) | Fuse is blown or missing or short circuit in secondary (24VAC) wiring. | Replace fuse if needed. Verify no short circuit in low voltage (24 VAC wiring). |
| Limit switch faults (LED 2 flashes) | High temperature limit switch is open. | Check the operation of the indoor (evaporator) fan motor. Ensure that the supply-air temperature rise is in accordance with the range on the unit nameplate. Clean or replace filters. |
| Flame sense fault (LED 3 flashes) | The IGC* sensed flame that should not be present. | Reset unit. If problem persists, replace control board. |
| 4 consecutive limit switch faults (LED 4 flashes) | Inadequate airflow to unit. | Check the operation of the indoor (evaporator) fan motor and that supply-air temperature rise agrees with range on unit nameplate information. |
| Ignition lockout fault (LED 5 flashes) | Unit unsuccessfully attempted ignition for 15 minutes. | Check ignitor and flame sensor electrode spacing, gaps, etc. Ensure that fame sense and ignition wires are properly terminated. Verify that unit is obtaining proper amount of gas. |
| Pressure Switch fault (LED 6 flashes) | Open pressure switch. | Verify wiring connections to pressure switch and inducer motor. Verify pressure switch hose is tightly connected to both inducer housing and pressure switch. Verify inducer wheel is properly attached to inducer motor shaft. Verify inducer motor shaft is turning. |
| Rollout switch fault (LED 7 flashes) | Rollout switch has opened. | Rollout switch will automatically reset, but IGC* will continue to lockout unit. Check gas valve operation. Ensure that induced-draft blower wheel is properly secured to motor shaft. Inspect heat exchanger. Reset unit at unit disconnect. |
| Internal control fault (LED 8 flashes) | Microprocessor has sensed an error in the software or hardware. | If error code is not cleared by resetting unit power, replace the IGC*. |
| Temporary 1 hr auto reset[1] (LED 9 flashes) | Electrical interference impeding IGC software | Reset 24-v. to control board or turn thermostat off, then on again. Fault will automatically reset itself in one (1) hour. |

***WARNING** ⚠**:** If the IGC must be replaced, be sure to ground yourself to dissipate any electrical charge that my be present before handling new control board. The IGC is sensitive to static electricity and my be damaged if the necessary precautions are not taken.

**IMPORTANT**: Refer to Table 14-Troubleshooting Guide-Heating for additional troubleshooting analysis.

**LEGEND**

IGC—Integrated Gas Unit Controller

LED—Light-Emitting Diode

# Start-Up Checklist

(Remove and Store in Job Files)

**I. PRELIMINARY INFORMATION**

MODEL NO.: _____

SERIAL NO.: _____

DATE: _____

TECHNICIAN: _____

**II. PRESTART-UP (Insert check mark in box as each item is completed)**

( ) VERIFY THAT ALL PACKING MATERIALS HAVE BEEN REMOVED FROM UNIT
( ) REMOVE ALL SHIPPING HOLD DOWN BOLTS AND BRACKETS PER INSTALLATION INSTRUCTIONS
( ) CHECK ALL ELECTRICAL CONNECTIONS AND TERMINALS FOR TIGHTNESS
( ) CHECK GAS PIPING FOR LEAKS (WHERE APPLICABLE)
( ) CHECK THAT INDOOR (EVAPORATOR) AIR FILTER IS CLEAN AND IN PLACE
( ) VERIFY THAT UNIT INSTALLATION IS LEVEL
( ) CHECK FAN WHEEL, AND PROPELLER FOR LOCATION IN HOUSING/ORIFICE AND SETSCREW TIGHTNESS
( ) INSPECT TUBING

**III. START-UP**

**ELECTRICAL**

SUPPLY VOLTAGE _____

COMPRESSOR AMPS _____

INDOOR (EVAPORATOR) FAN AMPS _____

**TEMPERATURES**

OUTDOOR (CONDENSER) AIR TEMPERATURE _____ DB

RETURN-AIR TEMPERATURE _____ DB _____ WB

COOLING SUPPLY AIR _____ DB _____ WB

HEAT PUMP SUPPLY AIR _____

GAS HEAT SUPPLY AIR _____

**PRESSURES**

GAS INLET PRESSURE _____ IN. W.C.

GAS MANIFOLD PRESSURE (HIGH STAGE) _____ IN. W.C.

GAS MANIFOLD PRESSURE (LOW STAGE) _____ _____IN. W.C.

REFRIGERANT SUCTION _____ PSIG,SUCTION LINE TEMP* _____

REFRIGERANT DISCHARGE _____PSIG, LIQUID TEMP† _____

( ) VERIFY REFRIGERANT CHARGE USING CHARGING CHARTS

HIGH STAGE GAS HEAT TEMPERATURE RISE RANGE (See Literature) _____

MEASURED TEMPERATURE RISE (HIGH STAGE)

LOW STAGE GAS HEAT TEMPERATURE RISE RANGE (208/230 VAC MODELS) _____

MEASURED LOW STAGE TEMPERATURE RISE RANGE (208/230 VAC MODELS) _____

* Measured at suction inlet to compressor
†Measured at liquid line leaving condenser.

Training

My Learning Center is your central location for professional residential HVAC training resources that help strengthen careers and businesses. We believe in providing high quality learning experiences both online and in the classroom.
Access My Learning Center with your HVACpartners credentials at www.mlctraining.com. Please contact us a mylearning@carrier.com with questions.

© 2023 Carrier. All rights reserved.
Edition Date: 03/23

**Catalog No: 48VR-09SI**

Replaces: 48VR-08SI

**Manufacturer reserves the right to change, at any time, specifications and designs without notice and without obligations.**