48XT−A
Infinity® 15 SEER
Single−Packaged HYBRID HEAT® Dual Fuel System with Puron® (R−410A) Refrigerant
Single Phase
2−5 Nominal Tons (Sizes 24−60)

Carrier
turn to the experts

Product Data

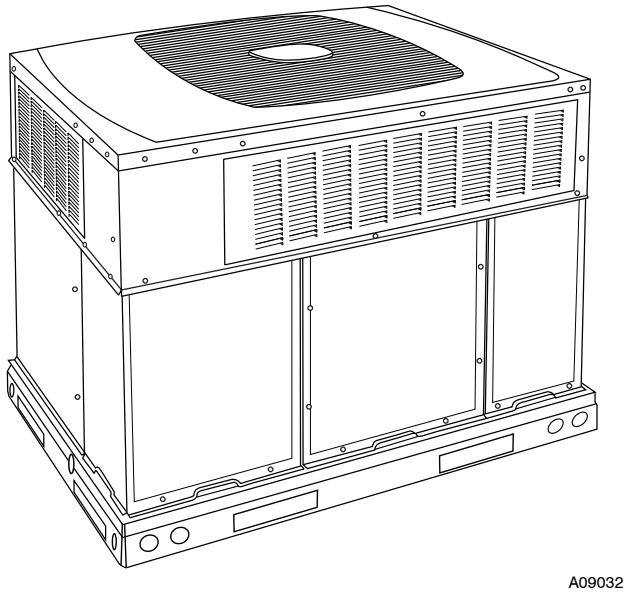

Fig. 1 - Unit 48XT-A

Single-Packaged Products with energy-saving features and Puron® refrigerant.

- Up to 15.5 SEER
- 8.0 HSPF
- Up to 12.0 EER
- Meets Energy Star requirements
- Up to 80.1% AFUE
- Low Sound Levels
- Variable-Speed Blower (Standard)
- Factory-Installed TXV
- Two-stage cooling/heat pump operation and gas heating
- Stainless steel heat exchanger
- Advanced Dehumidification Feature

FEATURES/BENEFITS

One-piece heating and cooling unit with low installation cost, dependable performance and easy maintenance.

Efficient operation

High-efficiency design with SEERs (Seasonal Energy Efficiency Ratio) of up to 15.5, EER up to 12.0, HSPF of 8.0 and AFUE up to 80.1%.

Puron® environmentally-sound refrigerant is Carrier's unique refrigerant designed to help protect the environment. Puron is an HFC refrigerant which does not contain chlorine that can harm the ozone layer. Puron refrigerant is in service in millions of systems proving highly reliable, environmentally sound performance.

Energy-saving, direct spark ignition saves gas by operating only when the room thermostat calls for heating. Standard units are furnished with natural gas controls. A low-cost field installed kit for propane conversion is available for all units.

Innovative Unit Base Design

On the inside a high-tech composite material will not rust and incorporates a sloped drain pan which improves drainage and helps inhibit mold, algae and bacterial growth. On the outside metal base rails provide added stability as well as easier handling and rigging.

48XTNA units are dedicated Low NOx units designed for California installations. These models meet the California maximum oxides of nitrogen (NOx) emissions requirement of 40 nanograms/joule or less as shipped from the factory and MUST be installed in California Air Quality Management Districts or any other location where a Low NOx rule exists.

Variable-speed blower motors provide better comfort and energy efficiency. Economical constant airflow which provides improved indoor air quality and more even temperatures from room to room; and reduced indoor noise due to lower air velocity. In addition, you'll realize improved installation flexibility with 3 different airflow choices for best overall comfort.

Easy installation

Factory-assembled package is a compact, fully self-contained combination gas heating heat pump unit that is pre-wired, pre-piped, and pre-charged for minimum installation expense. 48XT units are available in a variety of standard capacity ranges. Units install easily on a rooftop or at ground level.

Durable, dependable components

Compressors have two stages of cooling and heating and are designed for high efficiency. Each compressor is hermetically sealed against contamination to help promote longer life and dependable operation. Vibration isolation provides quiet operation. Compressors have internal high-pressure and overcurrent protection.

Convertible duct configuration

Unit is designed for use in either downflow or horizontal applications. Each unit is converted from horizontal to downflow and includes horizontal duct covers. Downflow operation is provided in the field to allow vertical ductwork connections. The basepan seals on the bottom openings to ensure a positive seal in the vertical airflow mode.

Full featured ECM Motor is standard on all 48XT-A models.

Direct-drive, PSC (Permanent Split Capacitor) condenser fan motors are designed to help reduce energy consumption and provide for cooling operation down to 55°F (12.7°C) outdoor temperature. This unit is capable of low-ambient cooling, down to 0°F (-17.7°C) ONLY when using the Infinity control. A low ambient kit is not required, and the outdoor fan motor does not need to be replaced for Infinity controlled low ambient operation. Low ambient cooling must be enabled to the UI set-up.

Infinity User Interface is designed to work as a system with Carrier's single-packaged product.

Refrigerant system is designed to provide dependability. Liquid refrigerant filter driers are used to promote clean, unrestricted operation. Each unit leaves the factory with a full Puron refrigerant charge. Refrigerant service connections make checking operating pressures easier.

Indoor and outdoor coils are computer designed for optimum heat transfer and cooling efficiency. The indoor coil is fabricated from copper tube and aluminum fins and is located inside the unit for protection against damage. The outdoor coil is internally mounted on the top tier of the unit. Copper fin coils and pre-coated fin coils are available from the factory by special order. These coils are recommended in applications where aluminum fins are likely to be damaged due to corrosion. They are ideal for seacoast applications.

Thermostatic expansion valve (TXV) —A hard-shutoff, balance port TXV maintains a constant superheat at the evaporator exit (cooling cycle) resulting in higher overall system efficiency.

High- and low-pressure switches give added safety and reliability to the compressor.

Low sound ratings ensure a quiet indoor and outdoor environment with sound ratings as low as 75 dBA. (See page 4.)

Monoport inshot burners produce precise air-to-gas mixture, which provides for clean and efficient combustion. The large monoport on the inshot (or injection type) burners seldom, if ever, requires cleaning. All gas furnace components are accessible in one compartment.

Turbo-tubular™ heat exchangers are constructed of 409 stainless steel for corrosion resistance and optimum heat transfer for improved efficiency. The tubular design permits hot gases to make multiple passes across the path of the supply air.

Easy to service cabinets provide easy 3-panel accessibility to serviceable components during maintenance and installation. The basepan, with integrated drain pan, provides easy ground level installation with a mounting pad. A nesting feature ensures a positive basepan to roof curb seal when the unit is roof mounted. A convenient 3/4-in. (19 mm) wide perimeter flange makes frame mounting on a rooftop easy.

Louvered grille provides hail and vandalism protection for the coil.

Infinity Furnace Control board provides safe and efficient control of heating and simplifies troubleshooting through its built-in diagnostic function.

Heating

- Reliable direct spark ignition system
- Two-speed PSC inducer motor with ball bearings
- Low stage heating delivers 65% of high-stage capacity

Cabinets are constructed of heavy-duty, phosphated, zinc-coated, pre-painted steel capable of withstanding 500 hrs of salt spray. Interior surfaces of the evaporator and electric heater compartments are insulated with cleanable, semi-rigid insulation board, which keeps the conditioned air from being affected by the outdoor ambient temperature and provides improved indoor air quality. (Conforms to American Society of Heating, Refrigeration and Air Conditioning Engineers No. 62P.) The sloped drain pan minimizes standing water in the unit, which is provided with an external drain.

Short-cycling protection for the compressor is incorporated into our Infinity heat pump/air conditioner dual capacity control board ensuring a five-minute delay before restarting compressor after shutdown for any reason.

TABLE OF CONTENTS

FEATURES/BENEFITS 1-2
MODEL NUMBER NOMENCLATURE 3
AHRI CAPACITIES 4
PHYSICAL DATA 5-6
OPTIONS AND ACCESSORIES 7
BASE UNIT DIMENSIONS 8-9
ACCESSORY DIMENSIONS 10
SELECTION PROCEDURE 11
PERFORMANCE DATA 12-32
TYPICAL PIPING AND WIRING 33
APPLICATION DATA 34
ELECTRICAL DATA 35
TYPICAL WIRING SCHEMATICS 36-39
CONTROLS 40
GUIDE SPECIFICATIONS 41-42

MODEL NUMBER NOMENCLATURE

48XT – A 24 040 3 0 – –

Type of Unit
48XT – Single Packaged HYBRID HEAT Dual Fuel System

Low NOx Indicator
– Standard
N Low NOx

Major Series

Nominal Cooling Capacity
24 – 2.0 Tons
30 – 2.5 Tons
36 – 3.0 Tons
42 – 3.5 Tons
48 – 4.0 Tons
60 – 5.0 Tons

Heat Input Size (Btuh)
040 – 40,000
060 – 60,000
090 – 90,000
115 – 115,000
130 – 130,000

Electrical Supply
3 – 208/230–1–60

Minor Series

Options

TP – Base unit with tin plated indoor coil hairpins

See Price Page for full list of factory options.
Only used if ordering an option

AHRI* CAPACITIES

Cooling Capacities and Efficiencies†

UNIT 48XT-A	NOMINAL TONS	STANDARD CFM (High/Low Stage) (Cooling & Heating)	NET COOLING CAPACITIES (Btuh) (High/Low Stage)	EER @A†	SEER‡
24	2	800 / 600	22,600 / 17,600	11.4	15.5
30	2-1/2	1000 / 700	28,600 / 21,400	11.6	15.0
36	3	1200 / 850	34,600 / 24,400	12	15.0
42	3-1/2	1400 / 975	40,500 / 29,000	11.6	15.0
48	4	1600 / 1100	46,000 / 33,400	11	15.0
60	5	1750 / 1200	57,000 / 40,500	11	14.5

Heat Pump Heating Capacities and Efficiencies†

UNIT 48XT-A	HIGH HEAT CAPACITY (BTUH) @ 47°F (8.3°C) (High/Low Stage)	HIGH HEAT COP @ 47°F (8.3°C) (High/Low Stage)	LOW HEAT CAPACITY (BTUH) @ 17°F (-8.3°C) (High/Low Stage)	LOW HEAT COP @ 17°F (-8.3°C) (High/Low Stage)	HSPF
24	20,800 / 16,800	3.3 / 3.2	11,600 / 8,400	2.2 / 1.8	8.0
30	27,600 / 20,400	3.5 / 3.5	14,000 / 9,600	2.1 / 1.9	8.0
36	33,600 / 23,000	3.4 / 3.4	17,200 / 11,200	2.4 / 1.7	8.0
42	39,500 / 27,600	3.6 / 3.5	20,600 / 14,200	2.3 / 2.0	8.0
48	45,500 / 32,200	3.3 / 3.5	25,000 / 15,200	2.4 / 1.9	8.0
60	56,000 / 39,500	3.2 / 3.3	30,800 / 20,400	2.2 / 1.9	8.0

Gas Heating Capacities and Efficiencies†

Unit 48XT-A	Heating Input (Btuh) High/Low	Output Capacity (Btuh) High / Low	Temperature Rise Range High °F (°C)	Temperature Rise Range Low °F (°C)	AFUE
24040 30040	40,000 / 26,000	32,000 / 21,000	20-50 (11-28)	15-45 (8-25)	78
30060 36060 42060	60,000 / 39,000	49,000 / 31,000	25-55 (14-31)	25-55 (14-31)	78.6
36090 42090 48090 60090	90,000 / 58,500	74,000 / 47,000	35-65 (19-36)	35-65 (19-36)	79.2
48115 60115	115,000 / 75,000	93,000 / 61,000	30-60 (17-33)	30-60 (17-33)	80.1
48130 60130	130,000 / 84,500	103,000 / 68,000	35-65 (19-36)	35-65 (19-36)	80.0

* Air Conditioning, Heating & Refrigeration Institute.

† Ratings are net values, reflecting the effects of circulating fan heat. Ratings are based on:
Cooling Standard: 80°F (26.6°C) db, 67°F (19.4°C) wb indoor entering –air temperature and 95°F (35°C) db outdoor entering–air temperature

‡ Rated in accordance with U.S. Government DOE (Department of Energy) test procedures and/or AHRI Standards 210/240.

Note: Ratings contained in this document are subject to change at any time. Always refer to the AHRI directory (www.ahridirectory.org) for the most up to date ratings information.

LEGEND
db—Dry Bulb
SEER—Seasonal Energy Efficiency Ratio
wb—Wet Bulb
COP—Coefficient of Performance
HSPF—Heating Season Performance Factor

ASHRAE 90.1 COMPLIANT

GAS-FIRED
c UL US LISTED c UL US LISTED

AHRI CERTIFIED™ www.ahridirectory.org

Use of the AHRI Certified TM Mark indicates a manufacturer's participation in the program For verification of certification for individual products, go to www.ahridirectory.org.

ENERGY STAR

PHYSICAL DATA

UNIT SIZE	A40040	A30040	A30060	A36060	A36090	A42060	A42090
NOMINAL COOLING CAPACITY (ton)	2	2–1/2	2–1/2	3	3	3–1/2	3–1/2
NOMINAL HEATING INPUT (Btu/hrs)	40,000	40,000	60,000	60,000	90,000	60,000	90,000
SHIPPING WEIGHT (lb)	468	498	498	540	540	551	551
(kg)	212	226	226	245	245	250	250
COMPRESSORS	Two–Stage Scroll						
Quantity	1						
REFRIGERANT: PURON (R–410A)							
Quantity (lb)	10.3	11.5	11.5	9.7	9.7	14.0	14.0
(kg)	4.7	5.2	5.2	4.4	4.4	6.4	6.4
EXPANSION DEVICE–HEATING	AccuRater						
Orifice OD (in.) – Left	0.042	0.038	0.038	0.035	0.035	0.040	0.040
Orifice OD (in.) – Right	N/A	0.038	0.038	0.035	0.035	0.042	0.042
EXPANSION DEVICE–COOLING	TXV						
Size	2 Ton	3 Ton	3 Ton	3 Ton	3 Ton	4 Ton	4 Ton
OUTDOOR COIL							
Rows...Fins/in.	2...21	2...21	2...21	2...21	2...21	2...21	2...21
Face Area (sq ft)	13.6	15.3	15.3	17.5	17.5	19.4	19.4
OUTDOOR FAN							
Nominal Cfm	2700	2700	2700	2800	2800	2800	2800
Diameter (in.)	22	22	22	22	22	22	22
(mm)	559	559	559	559	559	559	559
Motor Hp (Rpm)	1/8 (825)	1/8 (825)	1/8 (825)	1/8 (825)	1/8 (825)	1/8 (825)	1/8 (825)
INDOOR COIL							
Rows...Fins/in.	3...17	3...17	3...17	3...17	3...17	3...17	3...17
Face Area (sq ft)	3.7	3.7	3.7	4.7	4.7	4.7	4.7
INDOOR FAN							
Nominal Airflow (Cfm)							
Comfort	Variable based on Comfort Roll back (see User Interface instructions for more information).						
Efficiency	700	875	875	1050	1050	1225	1225
Max	800	1000	1000	1200	1200	1400	1400
Furnace (gas ht.) airflow–Low Stage, Efficiency Mode	475	475	727	745	875	745	875
Furnace (gas ht.) airflow–High Stage, Efficiency Mode	844	844	1120	1120	1410	1120	1410
Size (in.)	10x10	10x10	10x10	11x10	11x10	11x10	11x10
(mm)	254x254	254x254	254x254	279x254	279x254	279x254	279x254
Motor HP (RPM)	1/2	1/2	1/2	3/4	3/4	3/4	3/4
FURNACE SECTION*							
Burner Orifice No.							
Natural Gas Qty...Drill Size (Factory Installed)	2...44	2...44	3...44	3...44	3...38	3...44	3...38
Propane Gas Qty...Drill Size	2...55	2...55	3...55	3...55	3...53	3...55	3...53
HIGH–PRESSURE SWITCH (psig) Cut–out	670 ±10						
Reset (Auto)	470 ± 25						
HIGH–PRESSURE SWITCH 2 (psig)							
(Compressor Solenoid)							
Cut–out	565 ± 15						
Reset (Auto)	455 ± 15						
LOSS–OF–CHARGE / LOW–PRESSURE SWITCH							
(Liquid Line) (psig)							
Cut–out	23 ± 5						
Reset (auto)	55 ± 5						
RETURN–AIR FILTERS Throwaway							
(in.)†	20x24x1			24x30x1		24x36x1	
(mm)	508x610x25			610x762x25		610x914x25	

Continued next page.

PHYSICAL DATA (CONT)

UNIT SIZE	A48090	A48115	A48130	A60090	A60115	A60130
NOMINAL COOLING CAPACITY (ton)	4	4	4	5	5	5
NOMINAL HEATING INPUT (Btu/hrs)	90,000	115,000	130,000	90,000	115,000	130,000
SHIPPING WEIGHT (lb)	575	575	575	618	618	618
(kg)	261	261	261	280	280	280
COMPRESSORS	Two-Stage Scroll					
Quantity	1					
REFRIGERANT: PURON (R-410A)						
Quantity (lb)	15.5	15.5	15.5	16.0	16.0	16.0
(kg)	7.0	7.0	7.0	7.3	7.3	7.3
EXPANSION DEVICE-HEATING	AccuRater					
Orifice OD (in.) - Left	0.038	0.038	0.038	0.046	0.046	0.046
Orifice OD (in.) - Right	0.046	0.046	0.046	0.046	0.046	0.046
EXPANSION DEVICE-COOLING	TXV					
Size	4 Ton	4 Ton	4 Ton	5 Ton	5 Ton	5 Ton
OUTDOOR FAN						
Nominal Cfm	3300	3300	3300	3300	3300	3300
Diameter (in.)	22	22	22	22	22	22
(mm)	559	559	559	559	559	559
Motor Hp (Rpm)	1/4 (1100)	1/4 (1100)	1/4 (1100)	1/3 (1110)	1/3 (1110)	1/3 (1110)
OUTDOOR COIL						
Rows...Fins/in.	2...21	2...21	2...21	2...21	2...21	2...21
Face Area (sq ft)	19.4	19.4	19.4	23.3	23.3	23.3
INDOOR COIL						
Rows...Fins/in.	3...17	3...17	3...17	4...17	4...17	4...17
Face Area (sq ft)	5.7	5.7	5.7	5.7	5.7	5.7
INDOOR FAN						
Nominal Airflow (Cfm)						
Comfort	Variable based on Comfort Roll back (see User Interface instructions for more information).					
Efficiency	1400	1400	1400	1750	1750	1750
Max	1600	1600	1600	2000	2000	2000
Furnace (gas ht.) airflow–Low Stage, Efficiency Mode	815	1215	1255	845	1215	1255
Furnace (gas ht.) airflow–High Stage, Efficiency Mode	1385	1885	1875	1300	1910	1920
Size in.	11x10	11x10	11x10	11x10	11x10	11x10
(mm)	279x254	279x254	279x254	279x254	279x254	279x254
Motor HP (RPM)	3/4	3/4	3/4	1	1	1
FURNACE SECTION*						
Burner Orifice No.						
Natural Gas Qty...Drill Size (Factory Installed)	3...38	3...33	3...31	3...38	3...33	3...31
Propane Gas Qty...Drill Size	3...53	3...51	3...49	3...53	3...51	3...49
HIGH-PRESSURE SWITCH (psig)						
Cut-out	670 ± 10					
Reset (Auto)	470 ± 25					
HIGH-PRESSURE SWITCH 2 (psig)						
(Compressor Solenoid)						
Cut-out	565 ± 15					
Reset (Auto)	455 ± 15					
LOSS-OF-CHARGE / LOW-PRESSURE SWITCH						
(Liquid Line) (psig)						
Cut-out	23 ± 5					
Reset (auto)	55 ± 5					
RETURN-AIR FILTERS Throwaway **(in.)†**	24x36x1					
(mm)	610x914x25					

*Based on altitude of 0 to 2000 ft (0–610 m).

†Recommended filter sizes for field–installed air filter grilles mounted on the wall or ceiling of the conditioned structure. Required filter sizes shown are based on the larger of the AHRI (Air Conditioning, Heating and Refrigeration Institute) rated cooling airflow or the heating airflow velocity of 300 ft/minute for throwaway type or 450 ft/minute for high–capacity type. Air filter pressure drop for non–standard filters must not exceed 0.08 in. wc.

A-Weighted Sound Power Level (dBA)

MODEL 48XT-A	Standard Rating (dBA)	Typical Octave Band Spectrum (dBA) (without tone adjustment)						
		125	250	500	1000	2000	4000	8000
24	75	58.8	63.5	67.2	66.9	63.7	58.3	50.0
30	75	58.8	63.5	67.2	66.9	63.7	58.3	50.0
36	75	60.7	63.3	66.8	66.5	64.2	60.3	53.0
42	75	56.7	62.8	67.8	67.4	63.7	57.7	50.8
48	78	62.4	69.9	71.3	73.4	70.0	66.3	60.1
60	78	63.5	67.6	71.8	75.5	71.0	68.1	59.9

NOTE: Tested in accordance with AHRI standard 270 (not listed in AHRI).

OPTIONS AND ACCESSORIES

ITEM	DESCRIPTION	FACTORY INSTALLED OPTION	FIELD INSTALLED ACCESSORY
Coil Options	Base unit with tin plated indoor coil hairpins	X	
Corporate Thermostats	Thermostats provide control for the system heating and cooling functions.		X
Filter Rack	Filter Rack features easy installation, serviceability, and high–filtering performance for vertical applications. Includes 1–in. (25 mm) filter.		X
Flat Roof Curbs	Flat Roof Curbs in both 11–in (279 mm) and 14–in. (356 mm) sizes are available for roof mounted applications.		X
Flue Discharge Deflector	Directs flue gas exhaust 90 degrees upward from current discharge.		X
High Altitude Propane Conversion Kit	High Altitude Propane Conversion Kit is for use at 2001 to 6000 ft. (611–1829 m) above sea level. Kit consists of propane gas orifices that compensate for gas heat operation at high altitude.		X
Manual Outside Air Damper	Manual Outside Air Damper includes hood and filter rack with adjustable damper blade for up to 25% outdoor air.		X
Natural to Propane Gas Conversion Kit	Natural to Propane Gas Conversion Kit allows for conversion from natural gas to propane gas (0–2000 ft) (0–610 m)		X
Propane to Natural Gas Conversion Kit	Propane to Natural Gas Conversion Kit allows for conversion from propane to natural gas for altitudes of 0–2000 ft (0–610 m)		X
Square–to–Round Duct Transition Kit	Square–to–Round Duct Transition Kit enable 24–48 size units to be fitted to 14 in. (356 mm) round ductwork.		X

48XT – A

FILTER RACK

FILTER RACK

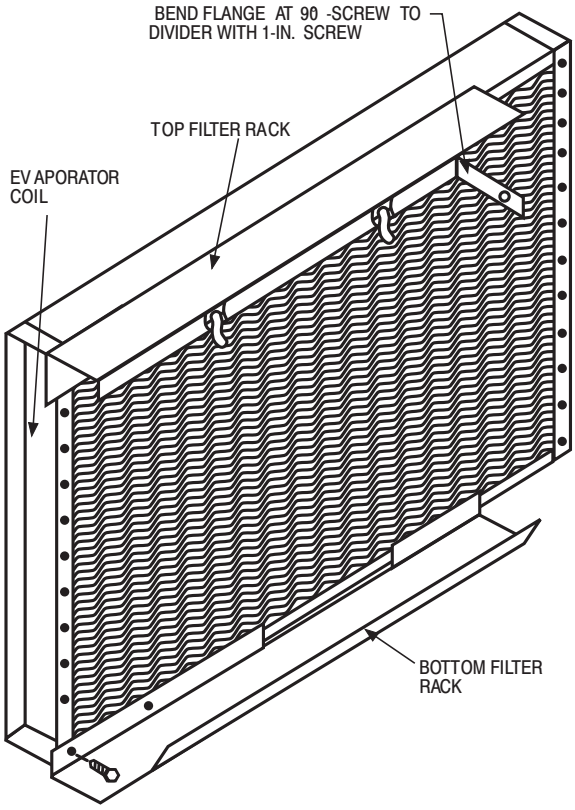

A09236

MANUAL OUTSIDE AIR DAMPER

MANUAL OUTSIDE AIR DAMPER

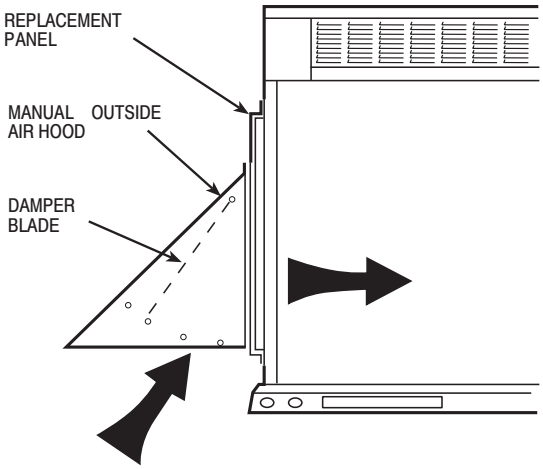

A09235

UNIT DIMENSIONS - 48XT-A24-30

UNIT	ELECTRICAL CHARACTERISTICS	UNIT WT.		UNIT HEIGHT		CENTER OF GRAVITY IN/MM					
		LB	KG	"A"		X		Y		Z	
48XT-A2404030	208/230-1-60	461	209.0	44-3/4	1136.7	22-1/8	562.0	14-5/16	363.5	17-5/8	447.7
48XT(-/N)A3004030	208/230-1-60	491	222.6	46-3/4	1187.5	22-1/8	562.0	14-5/16	363.5	17-5/8	447.7
48XT(-/N)A3006030	208/230-1-60	496	224.9	46-3/4	1187.5	22-1/8	562.0	14-5/16	363.5	17-5/8	447.7

UNITS	VOLTAGE	CORNER WEIGHT LB/KG							
		"1"		"2"		"3"		"4"	
48XT-A2404030	208/230	69.1	31.4	92.2	41.8	138.2	62.8	161.3	73.2
48XT(-/N)A3004030	208/230	73.6	33.4	98.2	44.6	147.2	66.8	171.8	78.0
48XT(-/N)A3006030	208/230	74.4	33.8	99.2	45.0	148.7	67.5	173.5	78.8

REQUIRED CLEARANCES TO COMBUSTIBLE MATL.

	INCHES [MM]
TOP OF UNIT	14 [355.6]
DUCT SIDE OF UNIT	2 [50.8]
SIDE OPPOSITE DUCTS	14 [355.6]
BOTTOM OF UNIT	0 [0.0]
FLUE PANEL	36 [914.4]

NEC. REQUIRED CLEARANCES.

	INCHES [MM]
BETWEEN UNITS, POWER ENTRY SIDE	42 [1066.8]
UNIT AND UNGROUNDED SURFACES, POWER ENTRY SIDE	36 [914.0]
UNIT AND BLOCK OR CONCRETE WALLS AND OTHER GROUNDED SURFACES, POWER ENTRY SIDE	42 [1066.8]

REQUIRED CLEARANCE FOR OPERATION AND SERVICING

	INCHES [MM]
EVAP. COIL ACCESS SIDE	36 [914.0]
POWER ENTRY SIDE	42 [1066.8]
(EXCEPT FOR NEC REQUIREMENTS)	
UNIT TOP	48 [1219.2]
SIDE OPPOSITE DUCTS	36 [914.0]
DUCT PANEL	12 [304.8]*

*MINIMUM DISTANCES: IF UNIT IS PLACED LESS THAN 12 [304.8] FROM WALL SYSTEM,THEN SYSTEM PERFORMANCE MAY BE COMPROMISED.

DIMENSIONS IN [] ARE IN MILLIMETERS

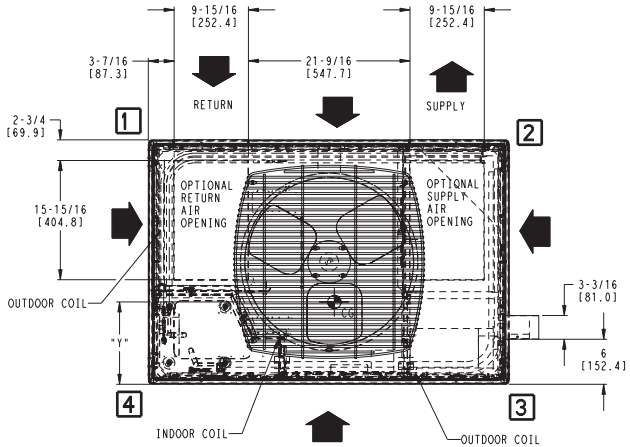

TOP VIEW

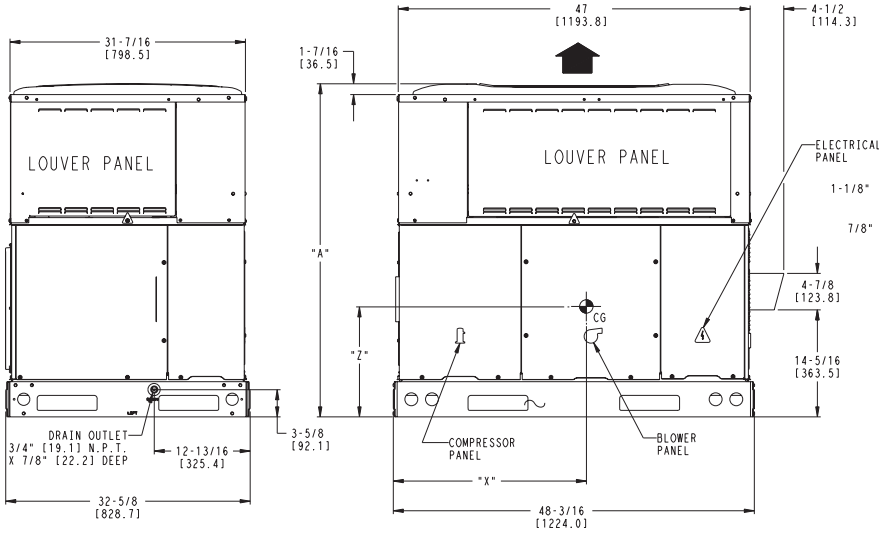

LEFT SIDE VIEW

FRONT VIEW

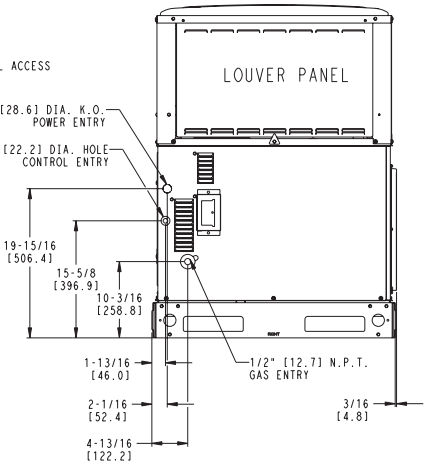

RIGHT SIDE VIEW

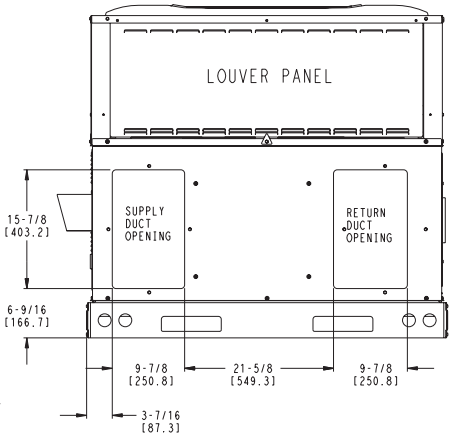

REAR VIEW

48XT500027	REV 4.0

A09523

UNIT DIMENSIONS - 48XT-A36-60

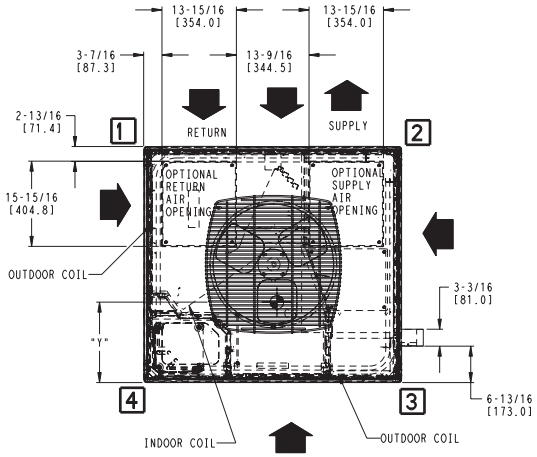

TOP VIEW

UNIT	ELECTRICAL CHARACTERISTICS	UNIT WT.		UNIT HEIGHT		CENTER OF GRAVITY IN/MM					
		LB	KG	"A"		X		Y		Z	
48XT(-/N)A3606030	208/230-1-60	531	241.0	48-3/4	1238.3	22-1/8	562.0	17	431.8	16-5/8	422.3
48XT(-/N)A3609030	208/230-1-60	539	244.6	48-3/4	1238.3	22-1/8	562.0	17	431.8	16-5/8	422.3
48XT(-/N)A4206030	208/230-1-60	542	246.0	50-3/4	1289.1	22-1/8	562.0	17	431.8	16-5/8	422.3
48XT(-/N)A4209030	208/230-1-60	550	249.6	50-3/4	1289.1	22-1/8	562.0	17	431.8	16-5/8	422.3
48XT(-/N)A4809030	208/230-1-60	566	256.8	50-3/4	1289.1	22-1/8	562.0	17	431.8	17-5/8	447.0
48XT(-/N)A4811530	208/230-1-60	566	256.8	50-3/4	1289.1	22-1/8	562.0	17	431.8	17-5/8	447.0
48XT(-/N)A4813030	208/230-1-60	566	256.8	50-3/4	1289.1	22-1/8	562.0	17	431.8	17-5/8	447.0
48XT(-/N)A6009030	208/230-1-60	609	276.3	54-3/4	1390.7	22-1/8	562.0	17	431.8	18	457.2
48XT(-/N)A6011530	208/230-1-60	609	276.3	54-3/4	1390.7	22-1/8	562.0	17	431.8	18	457.2
48XT(-/N)A6013030	208/230-1-60	609	276.3	54-3/4	1390.7	22-1/8	562.0	17	431.8	18	457.2

UNITS	VOLTAGE	CORNER WEIGHT LB/KG							
		"1"		"2"		"3"		"4"	
48XT(-/N)A3606030	208/230	79.7	36.2	106.2	48.2	159.4	72.4	185.9	84.4
48XT(-/N)A3609030	208/230	80.9	36.7	107.8	49.0	161.8	73.4	188.7	85.7
48XT(-/N)A4206030	208/230	81.3	36.9	108.4	49.2	162.7	73.9	189.8	86.2
48XT(-/N)A4209030	208/230	82.5	37.5	110.0	50.0	165.1	74.9	192.6	87.4
48XT(-/N)A4809030	208/230	84.9	38.6	113.2	51.4	169.9	77.1	198.2	90.0
48XT(-/N)A4811530	208/230	84.9	38.6	113.2	51.4	169.9	77.1	198.2	90.0
48XT(-/N)A4813030	208/230	84.9	38.6	113.2	51.4	169.9	77.1	198.2	90.0
48XT(-/N)A6009030	208/230	91.4	41.5	121.8	55.3	182.8	83.0	213.2	96.8
48XT(-/N)A6011530	208/230	91.4	41.5	121.8	55.3	182.8	83.0	213.2	96.8
48XT(-/N)A6013030	208/230	91.4	41.5	121.8	55.3	182.8	83.0	213.2	96.8

REQUIRED CLEARANCES TO COMBUSTIBLE MATL.

INCHES [MM]
TOP OF UNIT.....14 [355.6]
DUCT SIDE OF UNIT.....2 [50.8]
SIDE OPPOSITE DUCTS.....14 [355.6]
BOTTOM OF UNIT.....0 [0.0]
FLUE PANEL.....36 [914.4]

NEC. REQUIRED CLEARANCES.

INCHES [MM]
BETWEEN UNITS, POWER ENTRY SIDE.....42 [1066.8]
UNIT AND UNGROUNDED SURFACES, POWER ENTRY SIDE...36 [914.0]
UNIT AND BLOCK OR CONCRETE WALLS AND OTHER
GROUNDED SURFACES, POWER ENTRY SIDE.....42 [1066.8]

REQUIRED CLEARANCE FOR OPERATION AND SERVICING

INCHES [MM]
EVAP. COIL ACCESS SIDE.....36 [914.0]
POWER ENTRY SIDE.....42 [1066.8]
(EXCEPT FOR NEC REQUIREMENTS)
UNIT TOP.....48 [1219.2]
SIDE OPPOSITE DUCTS.....36 [914.0]
DUCT PANEL.....12 [304.8]*

*MINIMUM DISTANCES: IF UNIT IS PLACED LESS THAN 12 [304.8] FROM WALL SYSTEM,THEN SYSTEM PERFORMANCE MAY BE COMPROMISED.

DIMENSIONS IN [] ARE IN MM

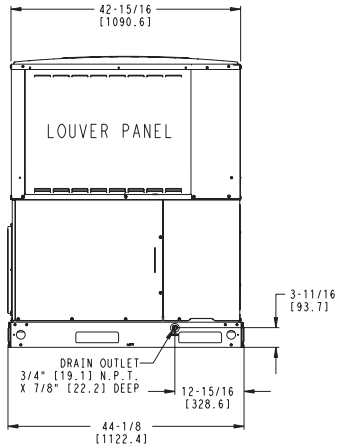

LEFT SIDE VIEW

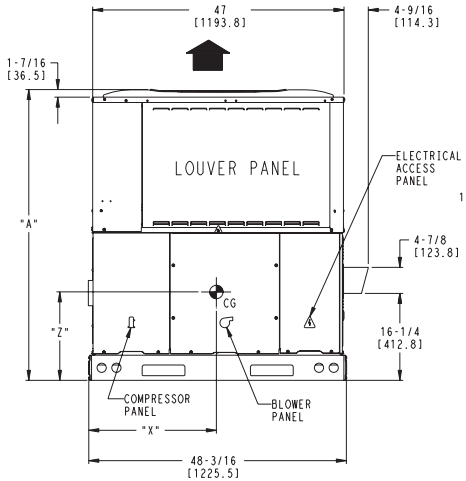

FRONT VIEW

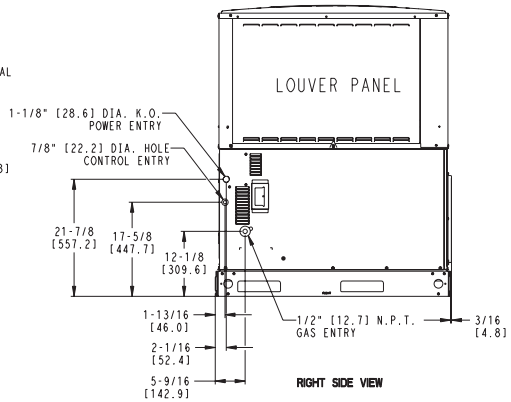

RIGHT SIDE VIEW

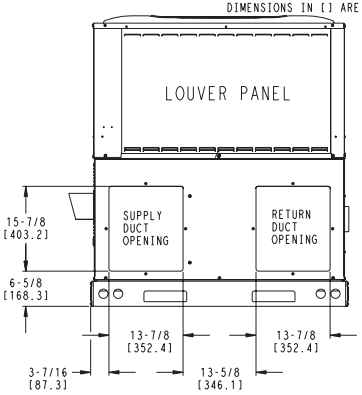

REAR VIEW

48XT500028	REV 4.0

48XT –A

A09524

ACCESSORY DIMENSIONS

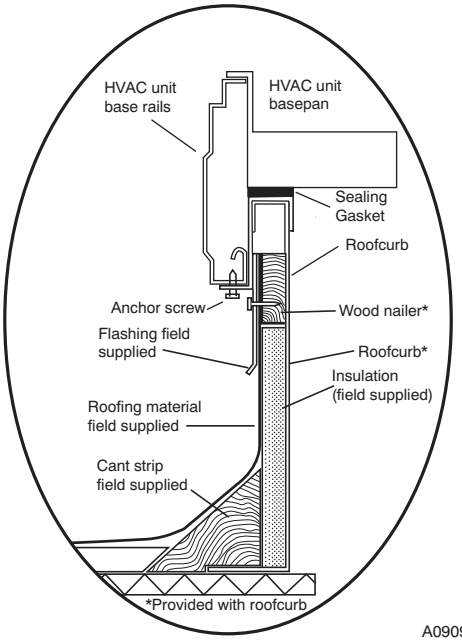

ROOF CURB DETAIL

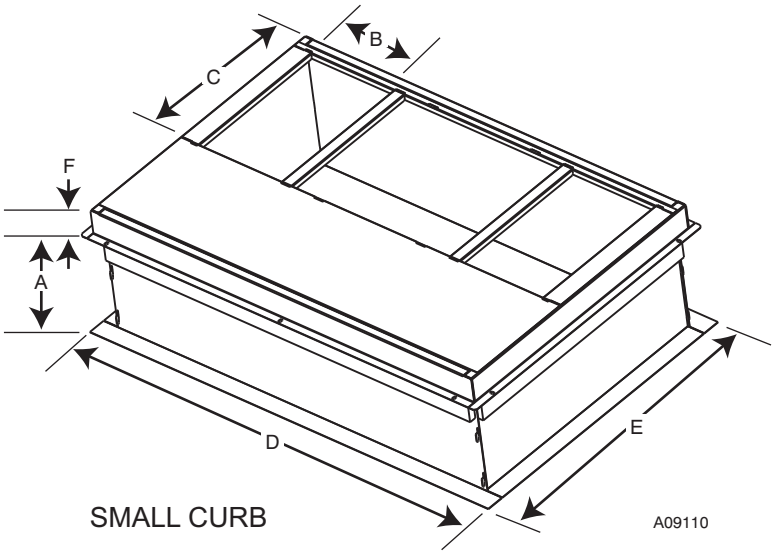

SMALL CURB

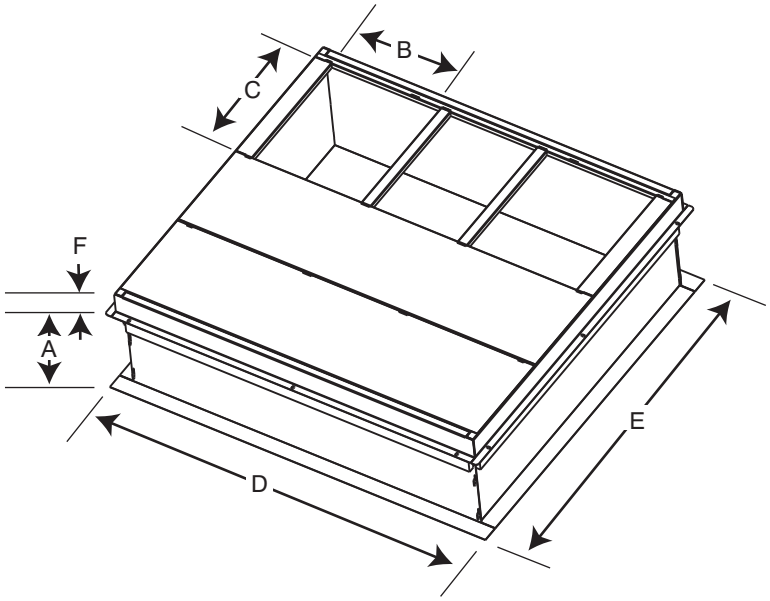

LARGE CURB

A09111

UNIT BASEPAN SIZE	CATALOG NUMBER	A IN. (mm)	B IN. (mm)	C IN. (mm)	D IN. (mm)	E IN. (mm)	F IN. (mm)
Small	CPRFCURB010A00	11 (279)	10 (254)	16 (406)	47.8 (1214)	32.4 (822)	2.7 (69)
	CPRFCURB011A00	14 (356)					
Large	CPRFCURB012A00	11 (279)	14 (356)			43.9 (1116)	
	CPRFCURB013A00	14 (356)					

NOTES:

1. Roof curb must be set up for unit being installed.
2. Seal strip must be applied, as required, to unit being installed.
3. Roof curb is made of 16-gauge steel.
4. Attach ductwork to curb (flanges of duct rest on curb).
5. Insulated panels: 1-in. (25 mm) thick fiberglass 1 lb. density.

IMPORTANT: Do not install large base pan HYBRID HEAT units onto the small base pan (common curb). The center of gravity on a large base pan HYBRID HEAT unit could overhang the curb causing an unsafe condition. Before installing any large base pan unit onto the common curb, check the “Y” distance in the product literature dimensional drawing to ensure that “Y” is greater than 14 in. (356 mm). Do not install any large base pan unit onto the common curb with a “Y” dimension (center of gravity) less than 14 in. (356 mm).

SELECTION PROCEDURE

Determine cooling and heating requirements at design conditions

Given:

REQUIRED COOLING CAPACITY (TC) . . . . . 34,500 BTUH
SENSIBLE HEAT CAPACITY (SHC) . . . . . 22,000 BTUH
REQUIRED HEATING CAPACITY (SHC) . . . . . 42,000 BTUH
CONDENSER ENTERING AIR TEMPERATURE 95°F (35°C)
INDOOR-AIR TEMPERATURE . . . 80°F (26.6°C) EDB, 67°F (19.4°C) EWB
EVAPORATOR AIR QUANTITY . . . . . 1200 CFM
ELECTRICAL CHARACTERISTICS 230-1-60

Select unit based on required cooling capacity

Enter Net Cooling Capacities table at condenser entering temperature of 95°F (35°C). The 36 unit at 1200 cfm and 67°F (19.4°C) ewb (entering wet bulb) will provide a total capacity of 34,600 Btuh and a SHC of 24,220 Btuh. Calculate SHC correction, if required, using Note 4 under Cooling Capacities tables.

Select heating capacity of unit to provide design condition requirement

In the Heating Capacities and Efficiencies table on page 4, note that the unit 36060 will provide 49,000 Btuh of capacity with an input of 60,000 Btuh.

Select unit that corresponds to power source available

The Electrical Data table shows that the unit is designed to operate at 208/230-1-60.

PERFORMANCE DATA-STANDARD ECM INDOOR MOTOR

Cooling Extended Performance Table

48XT-A24 High Cool

EVAPORATOR AIR		CONDENSER ENTERING AIR TEMPERATURES																	
		75°F (23.8°C)			85°F (29.4°C)			95°F (35°C)			105°F (40.5°C)			115°F (46.1°C)			125°F (51.6°C)		
CFM	EWB °F (°C)	Capacity MBtuh		Total System KW	Capacity MBtuh		Total System KW	Capacity MBtuh		Total System KW	Capacity MBtuh		Total System KW	Capacity MBtuh		Total System KW	Capacity MBtuh		Total System KW
		Total	Sens		Total	Sens		Total	Sens		Total	Sens		Total	Sens		Total	Sens	
700	57 (13.9)	21.77	21.77	1.61	20.88	20.88	1.79	19.95	19.95	2.00	18.94	18.94	2.23	17.86	17.86	2.48	16.66	16.66	2.77
	62 (16.7)	22.40	18.69	1.61	21.29	18.21	1.80	20.13	17.70	2.00	18.95	18.95	2.23	17.86	17.86	2.48	16.66	16.66	2.77
	63* (17.2)	22.85	15.18	1.62	21.71	14.70	1.80	20.52	14.21	2.01	19.25	13.70	2.23	17.90	13.16	2.48	16.42	12.58	2.77
	67 (19.4)	24.66	15.72	1.64	23.44	15.24	1.83	22.15	14.75	2.03	20.79	14.24	2.26	19.34	13.70	2.51	17.74	13.12	2.79
	72 (22.2)	27.16	12.75	1.67	25.83	12.28	1.86	24.42	11.80	2.06	22.94	11.29	2.29	21.33	10.76	2.54	19.57	10.18	2.83
800	57 (13.9)	22.76	22.76	1.64	21.81	21.81	1.82	20.81	20.81	2.03	19.74	19.74	2.26	18.58	18.58	2.51	17.29	17.29	2.80
	62 (16.7)	22.97	20.16	1.64	21.84	21.76	1.82	20.81	20.81	2.03	19.74	19.74	2.26	18.58	18.58	2.51	17.29	17.29	2.80
	63* (17.2)	23.39	16.20	1.64	22.19	15.71	1.83	20.94	15.21	2.03	19.62	14.69	2.26	18.22	14.14	2.51	16.69	13.54	2.79
	67 (19.4)	25.22	16.81	1.67	23.94	16.32	1.85	22.60	15.82	2.05	21.18	15.30	2.28	19.67	14.74	2.53	18.01	14.14	2.82
	72 (22.2)	27.77	13.43	1.70	26.37	12.96	1.88	24.90	12.48	2.09	23.35	11.95	2.31	21.66	11.41	2.57	20.60	11.05	2.57

48XT-A24 Low Cool

EVAPORATOR		CONDENSER ENTERING AIR TEMPERATURES																	
		75°F (23.8°C)			85°F (29.4°C)			95°F (35°C)			105°F (40.5°C)			115°F (46.1°C)			125°F (51.6°C)		
CFM	EWB °F (°C)	Capacity MBtuh		Total System KW	Capacity MBtuh		Total System KW	Capacity MBtuh		Total System KW	Capacity MBtuh		Total System KW	Capacity MBtuh		Total System KW	Capacity MBtuh		Total System KW
		Total	Sens		Total	Sens		Total	Sens		Total	Sens		Total	Sens		Total	Sens	
525	57 (13.9)	16.65	16.65	1.05	15.95	15.95	1.20	15.21	15.21	1.37	14.40	14.40	1.57	13.52	13.52	1.80	12.55	12.55	2.07
	62 (16.7)	17.20	14.47	1.06	16.29	14.07	1.21	15.34	13.65	1.37	14.40	14.40	1.57	13.52	13.52	1.80	12.55	12.55	2.07
	63* (17.2)	17.61	11.75	1.06	16.69	11.36	1.21	15.70	10.96	1.38	14.64	10.53	1.57	13.50	10.07	1.80	12.27	9.58	2.06
	67 (19.4)	19.23	12.26	1.08	18.23	11.87	1.22	17.18	11.47	1.39	16.05	11.03	1.58	14.83	10.58	1.81	13.50	10.09	2.07
	72 (22.2)	21.48	10.05	1.09	20.41	9.66	1.24	19.26	9.26	1.41	18.02	8.84	1.60	16.69	8.39	1.83	15.24	7.90	2.09
600	57 (13.9)	17.52	17.52	1.08	16.77	16.77	1.23	15.96	15.96	1.39	15.10	15.10	1.59	14.15	14.15	1.82	13.11	13.11	2.09
	62 (16.7)	17.71	15.66	1.08	16.78	16.75	1.23	15.96	15.96	1.39	15.10	15.10	1.59	14.15	14.15	1.82	13.12	13.12	2.09
	63* (17.2)	18.10	12.58	1.08	17.12	12.18	1.23	16.09	11.76	1.39	14.98	11.32	1.59	13.80	10.85	1.81	12.51	10.35	2.08
	67 (19.4)	19.75	13.14	1.09	18.71	12.74	1.24	17.60	12.32	1.41	16.41	11.88	1.60	15.14	11.41	1.83	13.76	10.91	2.09
	72 (22.2)	22.06	10.61	1.11	20.93	10.21	1.26	19.72	9.80	1.43	18.41	9.36	1.62	17.03	8.91	1.85	15.51	8.41	2.11

See page 30 for cooling notes.

PERFORMANCE DATA-STANDARD ECM INDOOR MOTOR

Heating Capacity

48XT-A24 High

INDOOR AIR		OUTDOOR COIL ENTERING AIR TEMPERATURES														
		-10°F (-23.3°C)			0°F (-17.7°C)			10°F (-12.2°C)			17°F (-8.3°C)			20°F (-6.6°C)		
EDB °F (°C)	CFM	Capacity MBtuh Total	Capacity MBtuh Integ	Total System KW	Capacity MBtuh Total	Capacity MBtuh Integ	Total System KW	Capacity MBtuh Total	Capacity MBtuh Integ	Total System KW	Capacity MBtuh Total	Capacity MBtuh Integ	Total System KW	Capacity MBtuh Total	Capacity MBtuh Integ	Total System KW
60 (15.6)	700	4.21	3.88	1.12	6.40	5.89	1.21	9.38	8.61	1.32	11.90	10.85	1.42	14.22	12.90	1.45
	800	4.24	3.90	1.11	6.47	5.95	1.20	9.46	8.69	1.31	11.94	10.89	1.43	14.27	12.94	1.44
70 (21.1)	700	3.97	3.65	1.25	6.12	5.63	1.35	9.01	8.27	1.46	11.51	10.49	1.55	12.36	11.21	1.49
	800	4.02	3.70	1.24	6.20	5.71	1.34	9.12	8.37	1.45	11.60	10.58	1.55	12.46	11.30	1.66
80 (26.7)	700	3.77	3.47	1.38	5.83	5.36	1.49	8.62	7.91	1.61	11.03	10.06	1.70	11.85	10.75	1.75
	800	3.82	3.51	1.38	5.91	5.43	1.48	8.74	8.02	1.59	11.17	10.19	1.69	12.00	10.88	1.72

48XT-A24 High Con't.

INDOOR AIR		OUTDOOR COIL ENTERING AIR TEMPERATURES														
		30°F (-1.1°C)			40°F (4.4°C)			47°F (8.3°C)			50°F (10°C)			60°F (15.5°C)		
EDB °F (°C)	CFM	Capacity MBtuh Total	Capacity MBtuh Integ	Total System KW	Capacity MBtuh Total	Capacity MBtuh Integ	Total System KW	Capacity MBtuh Total	Capacity MBtuh Integ	Total System KW	Capacity MBtuh Total	Capacity MBtuh Integ	Total System KW	Capacity MBtuh Total	Capacity MBtuh Integ	Total System KW
60 (15.6)	700	16.65	14.60	1.58	19.30	19.30	1.69	21.15	21.15	1.75	22.00	22.00	1.78	25.14	25.14	1.92
	800	16.84	14.76	1.53	19.36	19.36	1.61	21.27	21.27	1.66	22.16	22.16	1.70	25.40	25.40	1.82
70 (21.1)	700	16.03	14.05	1.62	18.69	18.69	1.86	20.68	20.68	1.95	21.51	21.51	1.98	24.54	24.54	2.11
	800	16.25	14.24	1.68	18.95	18.95	1.79	20.80	20.80	1.85	21.65	21.65	1.87	24.82	24.82	2.00
80 (26.7)	700	14.91	13.06	1.89	17.97	17.97	2.03	20.04	20.04	2.14	20.96	20.96	2.20	23.91	23.91	2.32
	800	15.10	13.23	1.84	18.27	18.27	1.96	20.30	20.30	2.05	21.13	21.13	2.08	24.20	24.20	2.21

LEGEND

Cap.— Heating Capacity (1000 Btuh) (Includes Indoor-Fan Motor Heat)

db — Dry Bulb

kW — Total Power Input (Includes Compressor Motor Power Input Outdoor-Fan Motor Input, and Indoor-Fan Motor Input)

rh — Relative Humidity

NOTES:

Integrated capacity is maximum (instantaneous) capacity less the effect of frost on the outdoor coil and the heat required to defrost it.

PERFORMANCE DATA-STANDARD ECM INDOOR MOTOR

Heating Capacity

48XT-A24 Low

INDOOR AIR		OUTDOOR COIL ENTERING AIR TEMPERATURES														
		-10°F (-23.3°C)			0°F (-17.7°C)			10°F (-12.2°C)			17°F (-8.3°C)			20°F (-6.6°C)		
EDB °F (°C)	CFM	Capacity MBtuh Total	Capacity MBtuh Integ	Total System KW	Capacity MBtuh Total	Capacity MBtuh Integ	Total System KW	Capacity MBtuh Total	Capacity MBtuh Integ	Total System KW	Capacity MBtuh Total	Capacity MBtuh Integ	Total System KW	Capacity MBtuh Total	Capacity MBtuh Integ	Total System KW
60 (15.6)	525	2.95	2.72	1.05	4.89	4.50	1.11	7.22	6.63	1.18	8.74	7.97	1.22	9.48	8.60	1.24
	600	2.99	2.75	1.04	4.97	4.58	1.09	7.31	6.71	1.17	8.89	8.11	1.20	9.64	8.74	1.22
70 (21.1)	525	2.81	2.59	1.22	4.72	4.34	1.29	6.73	6.18	1.35	8.26	7.53	1.38	8.97	8.14	1.40
	600	2.87	2.64	1.21	4.80	4.41	1.28	6.87	6.30	1.34	8.40	7.66	1.37	9.13	8.28	1.38
80 (26.7)	525	2.61	2.41	1.37	4.45	4.09	1.46	6.26	5.75	1.52	7.78	7.10	1.56	8.46	7.68	1.57
	600	2.66	2.46	1.36	4.53	4.16	1.44	6.38	5.86	1.51	7.92	7.22	1.54	8.60	7.80	1.56

48XT-A24 Low Con't.

INDOOR AIR		OUTDOOR COIL ENTERING AIR TEMPERATURES														
		30°F (-1.1°C)			40°F (4.4°C)			47°F (8.3°C)			50°F (10°C)			60°F (15.5°C)		
EDB °F (°C)	CFM	Capacity MBtuh Total	Capacity MBtuh Integ	Total System KW	Capacity MBtuh Total	Capacity MBtuh Integ	Total System KW	Capacity MBtuh Total	Capacity MBtuh Integ	Total System KW	Capacity MBtuh Total	Capacity MBtuh Integ	Total System KW	Capacity MBtuh Total	Capacity MBtuh Integ	Total System KW
60 (15.6)	525	12.17	10.66	1.30	15.20	15.20	1.37	17.28	17.28	1.41	18.16	18.16	1.44	19.43	19.43	1.44
	600	12.37	10.84	1.27	15.22	15.22	1.33	16.79	16.79	1.37	16.85	16.85	1.36	16.78	16.78	1.29
70 (21.1)	525	11.60	10.17	1.46	14.55	14.55	1.54	16.84	16.84	1.61	17.86	17.86	1.64	20.96	20.96	1.71
	600	11.80	10.34	1.43	14.80	14.80	1.50	16.80	16.80	1.54	17.64	17.64	1.57	18.39	18.39	1.53
80 (26.7)	525	11.00	9.64	1.64	13.91	13.91	1.72	16.15	16.15	1.79	17.17	17.17	1.83	20.53	20.53	1.91
	600	11.21	9.83	1.61	14.16	14.16	1.68	16.40	16.40	1.74	17.36	17.36	1.77	20.33	20.33	1.85

LEGEND

Cap.— Heating Capacity (1000 Btuh) (Includes Indoor-Fan Motor Heat)

db — Dry Bulb

kW — Total Power Input (Includes Compressor Motor Power Input Outdoor-Fan Motor Input, and Indoor-Fan Motor Input)

rh — Relative Humidity

NOTES:

Integrated capacity is maximum (instantaneous) capacity less the effect of frost on the outdoor coil and the heat required to defrost it.

PERFORMANCE DATA-STANDARD ECM INDOOR MOTOR

Cooling Extended Performance Table

48XT-A30 High Cool

EVAPORATOR AIR		CONDENSER ENTERING AIR TEMPERATURES																	
		75°F (23.8°C)			85°F (29.4°C)			95°F (35°C)			105°F (40.5°C)			115°F (46.1°C)			125°F (51.6°C)		
CFM	EWB °F (°C)	Capacity MBtuh		Total System KW	Capacity MBtuh		Total System KW	Capacity MBtuh		Total System KW	Capacity MBtuh		Total System KW	Capacity MBtuh		Total System KW	Capacity MBtuh		Total System KW
		Total	Sens		Total	Sens		Total	Sens		Total	Sens		Total	Sens		Total	Sens	
875	57 (13.9)	27.90	27.90	2.05	26.73	26.73	2.27	25.47	25.47	2.52	24.09	24.09	2.79	22.56	22.56	3.10	20.81	20.81	3.44
	62 (16.7)	28.72	23.85	2.06	27.25	23.21	2.28	25.70	22.53	2.52	24.09	24.09	2.79	22.56	22.56	3.10	20.81	20.81	3.44
	63* (17.2)	29.28	19.34	2.07	27.78	18.72	2.29	26.18	18.07	2.53	24.46	17.38	2.80	22.58	16.64	3.10	20.50	15.82	3.43
	67 (19.4)	31.48	19.99	2.10	29.85	19.36	2.32	28.11	18.70	2.56	26.23	18.00	2.83	24.19	17.25	3.13	21.92	16.42	3.47
	72 (22.2)	34.49	16.13	2.14	32.69	15.50	2.36	30.77	14.85	2.61	28.70	14.15	2.88	26.43	13.40	3.18	26.31	13.36	3.19
1000	57 (13.9)	29.10	29.10	2.09	27.84	27.84	2.32	26.48	26.48	2.56	25.00	25.00	2.84	23.34	23.34	3.15	21.47	21.47	3.49
	62 (16.7)	29.40	25.68	2.10	27.90	27.75	2.32	26.48	26.48	2.56	25.00	25.00	2.84	23.34	23.34	3.15	21.47	21.47	3.49
	63* (17.2)	29.91	20.61	2.10	28.33	19.98	2.32	26.66	19.31	2.57	24.86	18.60	2.83	22.90	17.84	3.13	20.75	17.00	3.47
	67 (19.4)	32.13	21.34	2.14	30.42	20.69	2.36	28.60	20.02	2.60	26.64	19.30	2.87	24.51	18.53	3.17	22.47	16.98	3.51
	72 (22.2)	35.18	16.96	2.18	33.29	16.32	2.40	31.27	15.65	2.65	29.11	14.94	2.92	26.76	14.18	3.22	24.19	13.36	3.55

48XT-A30 Low Cool

EVAPORATOR AIR		CONDENSER ENTERING AIR TEMPERATURES																	
		75°F (23.8°C)			85°F (29.4°C)			95°F (35°C)			105°F (40.5°C)			115°F (46.1°C)			125°F (51.6°C)		
CFM	EWB °F (°C)	Capacity MBtuh		Total System KW	Capacity MBtuh		Total System KW	Capacity MBtuh		Total System KW	Capacity MBtuh		Total System KW	Capacity MBtuh		Total System KW	Capacity MBtuh		Total System KW
		Total	Sens		Total	Sens		Total	Sens		Total	Sens		Total	Sens		Total	Sens	
615	57 (13.9)	20.32	20.32	1.29	19.50	19.50	1.48	18.60	18.60	1.70	17.60	17.60	1.95	16.20	16.20	2.21	15.23	15.23	2.58
	62 (16.7)	21.08	17.65	1.30	20.01	17.18	1.49	18.86	16.67	1.70	17.62	17.58	1.95	16.49	16.49	2.24	15.23	15.23	2.58
	63* (17.2)	21.55	14.40	1.30	20.47	13.94	1.49	19.28	13.44	1.70	17.99	12.90	1.95	16.58	12.33	2.24	15.02	11.71	2.58
	67 (19.4)	23.40	14.96	1.32	22.22	14.49	1.51	20.93	13.99	1.72	19.51	13.44	1.97	17.97	12.85	2.26	16.26	12.24	2.60
	72 (22.2)	25.95	12.26	1.35	24.65	11.79	1.53	23.20	11.28	1.75	21.63	10.73	2.00	19.91	10.14	2.28	18.01	9.51	2.62
700	57 (13.9)	21.32	21.32	1.31	20.44	20.44	1.50	19.46	19.46	1.72	18.38	18.38	1.97	17.17	17.17	2.26	15.82	15.82	2.60
	62 (16.7)	21.67	19.04	1.31	20.56	18.54	1.50	19.46	19.46	1.72	18.38	18.38	1.97	17.17	17.17	2.26	15.82	15.82	2.60
	63* (17.2)	22.13	15.36	1.32	20.98	14.89	1.51	19.74	14.38	1.72	18.38	13.83	1.97	16.90	13.24	2.26	15.28	12.60	2.60
	67 (19.4)	24.00	15.98	1.34	22.76	15.50	1.53	21.40	14.98	1.74	19.91	14.42	1.99	18.29	13.82	2.28	16.52	13.17	2.61
	72 (22.2)	26.61	12.91	1.36	25.22	12.42	1.55	23.71	11.90	1.76	22.06	11.34	2.01	20.25	10.74	2.30	18.28	10.09	2.63

See page 30 for cooling notes.

PERFORMANCE DATA-STANDARD ECM INDOOR MOTOR

Heating Capacity

48XT-A30 High

INDOOR AIR		OUTDOOR COIL ENTERING AIR TEMPERATURES														
		-10°F (-23.3°C)			0°F (-17.7°C)			10°F (-12.2°C)			17°F (-8.3°C)			20°F (-6.6°C)		
EDB °F (°C)	CFM	Capacity MBtuh Total	Capacity MBtuh Integ	Total System KW	Capacity MBtuh Total	Capacity MBtuh Integ	Total System KW	Capacity MBtuh Total	Capacity MBtuh Integ	Total System KW	Capacity MBtuh Total	Capacity MBtuh Integ	Total System KW	Capacity MBtuh Total	Capacity MBtuh Integ	Total System KW
60 (15.6)	875	7.07	6.51	1.56	9.35	8.60	1.64	12.08	11.09	1.72	14.34	13.07	1.78	15.42	13.99	1.81
	1000	7.16	6.59	1.56	9.46	8.70	1.64	12.23	11.23	1.71	14.51	13.23	1.77	15.61	14.16	1.79
70 (21.1)	875	6.74	6.20	1.73	9.00	8.28	1.82	11.66	10.70	1.91	13.82	12.60	1.97	14.85	13.46	2.00
	1000	6.84	6.29	1.73	9.12	8.39	1.82	11.80	10.83	1.90	14.00	12.76	1.95	15.04	13.64	1.98
80 (26.7)	875	6.31	5.81	1.90	8.56	7.88	2.00	11.20	10.28	2.10	13.30	12.13	2.17	14.28	12.95	2.20
	1000	6.42	5.91	1.90	8.69	8.00	2.00	11.35	10.42	2.09	13.48	12.29	2.15	14.46	13.11	2.18

48XT-A30 High Con't.

INDOOR AIR		OUTDOOR COIL ENTERING AIR TEMPERATURES														
		30°F (-1.1°C)			40°F (4.4°C)			47°F (8.3°C)			50°F (10°C)			60°F (15.5°C)		
EDB °F (°C)	CFM	Capacity MBtuh Total	Capacity MBtuh Integ	Total System KW	Capacity MBtuh Total	Capacity MBtuh Integ	Total System KW	Capacity MBtuh Total	Capacity MBtuh Integ	Total System KW	Capacity MBtuh Total	Capacity MBtuh Integ	Total System KW	Capacity MBtuh Total	Capacity MBtuh Integ	Total System KW
60 (15.6)	875	19.48	17.07	1.91	24.32	24.32	2.04	28.09	28.09	2.08	29.61	29.61	2.12	35.99	35.99	2.18
	1000	19.75	17.31	1.89	24.63	24.63	2.02	28.28	28.28	2.15	30.05	30.05	2.19	36.32	36.32	2.32
70 (21.1)	875	18.76	16.44	2.11	23.39	23.39	2.23	27.23	27.23	2.34	29.07	29.07	2.40	35.34	35.34	2.46
	1000	19.03	16.67	2.08	23.75	23.75	2.20	27.60	27.60	2.31	29.24	29.24	2.34	35.85	35.85	2.54
80 (26.7)	875	18.00	15.77	2.31	22.48	22.48	2.44	26.17	26.17	2.56	27.94	27.94	2.62	34.42	34.42	2.70
	1000	18.32	16.05	2.28	22.83	22.83	2.40	26.59	26.59	2.51	28.38	28.38	2.57	34.50	34.50	2.82

LEGEND

Cap.— Heating Capacity (1000 Btuh) (Includes Indoor-Fan Motor Heat)

db — Dry Bulb

kW — Total Power Input (Includes Compressor Motor Power Input Outdoor-Fan Motor Input, and Indoor-Fan Motor Input)

rh — Relative Humidity

NOTES:

Integrated capacity is maximum (instantaneous) capacity less the effect of frost on the outdoor coil and the heat required to defrost it.

PERFORMANCE DATA-STANDARD ECM INDOOR MOTOR

Heating Capacity

48XT-A30 Low

INDOOR AIR		OUTDOOR COIL ENTERING AIR TEMPERATURES														
		-10°F (-23.3°C)			0°F (-17.7°C)			10°F (-12.2°C)			17°F (-8.3°C)			20°F (-6.6°C)		
EDB °F (°C)	CFM	Capacity MBtuh Total	Capacity MBtuh Integ	Total System KW	Capacity MBtuh Total	Capacity MBtuh Integ	Total System KW	Capacity MBtuh Total	Capacity MBtuh Integ	Total System KW	Capacity MBtuh Total	Capacity MBtuh Integ	Total System KW	Capacity MBtuh Total	Capacity MBtuh Integ	Total System KW
60 (15.6)	615	3.77	3.47	1.12	5.75	5.29	1.20	8.06	7.40	1.27	9.90	9.03	1.32	10.75	9.75	1.34
	700	3.81	3.51	1.12	5.82	5.36	1.19	8.16	7.49	1.25	10.01	9.13	1.29	10.87	9.86	1.31
70 (21.1)	615	3.34	3.07	1.29	5.44	5.00	1.38	7.66	7.03	1.46	9.47	8.64	1.51	10.31	9.35	1.53
	700	3.42	3.15	1.29	5.55	5.10	1.37	7.75	7.11	1.44	9.60	8.75	1.48	10.45	9.47	1.50
80 (26.7)	615	2.85	2.62	1.47	4.84	4.45	1.57	7.16	6.57	1.65	8.97	8.18	1.71	9.80	8.89	1.73
	700	2.91	2.68	1.47	4.93	4.54	1.56	7.27	6.67	1.63	9.10	8.30	1.68	9.94	9.02	1.70

48XT-A30 Low Con't.

INDOOR AIR		OUTDOOR COIL ENTERING AIR TEMPERATURES														
		30°F (-1.1°C)			40°F (4.4°C)			47°F (8.3°C)			50°F (10°C)			60°F (15.5°C)		
EDB °F (°C)	CFM	Capacity MBtuh Total	Capacity MBtuh Integ	Total System KW	Capacity MBtuh Total	Capacity MBtuh Integ	Total System KW	Capacity MBtuh Total	Capacity MBtuh Integ	Total System KW	Capacity MBtuh Total	Capacity MBtuh Integ	Total System KW	Capacity MBtuh Total	Capacity MBtuh Integ	Total System KW
60 (15.6)	615	13.95	12.23	1.41	17.78	17.78	1.50	20.83	20.83	1.57	22.25	22.25	1.61	27.83	27.83	1.75
	700	14.14	12.39	1.37	18.04	18.04	1.45	21.17	21.17	1.51	22.64	22.64	1.54	28.00	28.00	1.62
70 (21.1)	615	13.39	11.73	1.61	17.11	17.11	1.70	20.08	20.08	1.78	21.45	21.45	1.81	26.70	26.70	1.96
	700	13.58	11.90	1.57	17.39	17.39	1.65	20.40	20.40	1.71	21.80	21.80	1.74	27.26	27.26	1.87
80 (26.7)	615	12.86	11.27	1.82	16.41	16.41	1.92	19.37	19.37	2.01	20.70	20.70	2.05	25.66	25.66	2.20
	700	13.03	11.42	1.78	16.66	16.66	1.86	19.66	19.66	1.93	21.02	21.02	1.96	26.16	26.16	2.09

LEGEND

Cap.— Heating Capacity (1000 Btuh) (Includes Indoor-Fan Motor Heat)

db — Dry Bulb

kW — Total Power Input (Includes Compressor Motor Power Input Outdoor-Fan Motor Input, and Indoor-Fan Motor Input)

rh — Relative Humidity

NOTES:

Integrated capacity is maximum (instantaneous) capacity less the effect of frost on the outdoor coil and the heat required to defrost it.

PERFORMANCE DATA-STANDARD ECM INDOOR MOTOR

Cooling Extended Performance Table

48XT-A36 High Cool

EVAPORATOR AIR		CONDENSER ENTERING AIR TEMPERATURES																	
		75°F (23.8°C)			85°F (29.4°C)			95°F (35°C)			105°F (40.5°C)			115°F (46.1°C)			125°F (51.6°C)		
CFM	EWB °F (°C)	Capacity MBtuh Total	Capacity MBtuh Sens	Total System KW	Capacity MBtuh Total	Capacity MBtuh Sens	Total System KW	Capacity MBtuh Total	Capacity MBtuh Sens	Total System KW	Capacity MBtuh Total	Capacity MBtuh Sens	Total System KW	Capacity MBtuh Total	Capacity MBtuh Sens	Total System KW	Capacity MBtuh Total	Capacity MBtuh Sens	Total System KW
1050	57 (13.9)	33.64	33.64	2.28	32.32	32.32	2.53	30.90	30.90	2.81	29.36	29.36	3.11	27.65	27.65	3.46	25.71	25.71	3.84
	62 (16.7)	34.47	28.72	2.29	32.83	28.00	2.54	31.11	27.24	2.81	29.36	29.36	3.11	27.65	27.65	3.46	25.71	25.71	3.84
	63* (17.2)	35.12	23.25	2.29	33.44	22.56	2.54	31.65	21.83	2.81	29.73	21.07	3.12	27.64	20.25	3.45	25.33	19.35	3.83
	67 (19.4)	37.76	24.04	2.32	35.94	23.34	2.57	34.00	22.61	2.84	31.91	21.83	3.15	29.65	21.00	3.49	27.14	20.10	3.87
	72 (22.2)	42.16	18.41	2.37	40.12	17.73	2.62	37.93	17.01	2.90	35.58	16.24	3.20	33.02	15.43	3.54	30.21	14.53	3.92
1200	57 (13.9)	35.06	35.06	2.32	33.64	33.64	2.58	32.12	32.12	2.85	30.46	30.46	3.16	28.63	28.63	3.50	26.56	26.56	3.89
	62 (16.7)	35.29	30.91	2.33	33.64	33.64	2.58	32.12	32.12	2.85	30.46	30.46	3.16	28.63	28.63	3.50	26.56	26.56	3.89
	63* (17.2)	35.86	24.79	2.33	34.09	24.08	2.58	32.22	23.34	2.85	30.23	22.56	3.15	28.05	21.71	3.49	25.66	20.78	3.87
	67 (19.4)	38.52	25.68	2.36	36.62	24.97	2.61	34.60	24.22	2.88	32.43	23.43	3.19	30.06	22.57	3.53	27.47	21.64	3.90
	72 (22.2)	42.99	19.31	2.41	40.85	18.61	2.66	38.57	17.87	2.93	36.13	17.09	3.24	33.48	16.25	3.58	30.56	15.35	3.96

48XT-A36 Low Cool

EVAPORATOR AIR		CONDENSER ENTERING AIR TEMPERATURES																	
		75°F (23.8°C)			85°F (29.4°C)			95°F (35°C)			105°F (40.5°C)			115°F (46.1°C)			125°F (51.6°C)		
CFM	EWB °F (°C)	Capacity MBtuh Total	Capacity MBtuh Sens	Total System KW	Capacity MBtuh Total	Capacity MBtuh Sens	Total System KW	Capacity MBtuh Total	Capacity MBtuh Sens	Total System KW	Capacity MBtuh Total	Capacity MBtuh Sens	Total System KW	Capacity MBtuh Total	Capacity MBtuh Sens	Total System KW	Capacity MBtuh Total	Capacity MBtuh Sens	Total System KW
745	57 (13.9)	23.27	23.27	1.46	22.34	22.34	1.65	21.31	21.31	1.87	20.19	20.19	2.12	18.95	18.95	2.41	17.58	17.58	2.76
	62 (16.7)	23.91	20.06	1.46	22.70	19.54	1.65	21.41	18.97	1.87	20.19	20.19	2.12	18.95	18.95	2.41	17.58	17.58	2.76
	63* (17.2)	24.46	16.28	1.47	23.21	15.77	1.66	21.87	15.23	1.87	20.42	14.65	2.12	18.85	14.03	2.41	17.14	13.36	2.75
	67 (19.4)	26.63	16.96	1.48	25.29	16.45	1.67	23.85	15.90	1.89	22.28	15.32	2.14	20.58	14.69	2.43	18.72	14.02	2.77
	72 (22.2)	29.67	13.86	1.51	28.20	13.35	1.70	26.61	12.81	1.91	24.89	12.23	2.16	23.01	11.60	2.45	20.96	10.93	2.79
850	57 (13.9)	24.45	24.45	1.48	23.43	23.43	1.67	22.33	22.33	1.89	21.11	21.11	2.14	19.80	19.80	2.44	18.32	18.32	2.78
	62 (16.7)	24.61	21.68	1.48	23.43	23.43	1.67	22.33	22.33	1.89	21.12	21.12	2.14	19.80	19.80	2.44	18.32	18.32	2.78
	63* (17.2)	25.11	17.42	1.49	23.80	16.89	1.68	22.39	16.34	1.89	20.88	15.74	2.14	19.24	15.10	2.43	17.46	14.42	2.77
	67 (19.4)	27.33	18.17	1.50	25.92	17.64	1.69	24.40	17.08	1.91	22.76	16.48	2.15	20.99	15.84	2.44	19.06	15.15	2.78
	72 (22.2)	30.44	14.64	1.53	28.89	14.12	1.71	27.21	13.55	1.93	25.40	12.96	2.17	23.45	12.33	2.46	21.30	11.65	2.80

See page 30 for cooling notes.

PERFORMANCE DATA-STANDARD ECM INDOOR MOTOR

Heating Capacity

48XT-A36 High

INDOOR AIR		OUTDOOR COIL ENTERING AIR TEMPERATURES														
		-10°F (-23.3°C)			0°F (-17.7°C)			10°F (-12.2°C)			17°F (-8.3°C)			20°F (-6.6°C)		
EDB °F (°C)	CFM	Capacity MBtuh Total	Capacity MBtuh Integ	Total System KW	Capacity MBtuh Total	Capacity MBtuh Integ	Total System KW	Capacity MBtuh Total	Capacity MBtuh Integ	Total System KW	Capacity MBtuh Total	Capacity MBtuh Integ	Total System KW	Capacity MBtuh Total	Capacity MBtuh Integ	Total System KW
60 (15.6)	1050	8.62	7.93	1.43	11.33	10.43	1.60	14.73	13.52	1.78	17.57	16.02	1.92	18.91	17.15	1.99
	1200	8.70	8.01	1.43	11.45	10.53	1.59	14.88	13.66	1.77	17.76	16.19	1.90	19.11	17.33	1.97
70 (21.1)	1050	8.34	7.68	1.59	11.02	10.14	1.77	14.26	13.09	1.97	16.99	15.49	2.12	18.32	16.61	2.19
	1200	8.44	7.77	1.59	11.14	10.25	1.77	14.42	13.24	1.96	17.20	15.68	2.10	18.53	16.81	2.17
80 (26.7)	1050	7.96	7.32	1.74	10.60	9.76	1.95	13.78	12.65	2.17	16.38	14.93	2.33	17.63	15.99	2.40
	1200	8.07	7.43	1.74	10.74	9.88	1.94	13.93	12.79	2.15	16.59	15.12	2.31	17.86	16.19	2.38

48XT-A36 High Con't.

INDOOR AIR		OUTDOOR COIL ENTERING AIR TEMPERATURES														
		30°F (-1.1°C)			40°F (4.4°C)			47°F (8.3°C)			50°F (10°C)			60°F (15.5°C)		
EDB °F (°C)	CFM	Capacity MBtuh Total	Capacity MBtuh Integ	Total System KW	Capacity MBtuh Total	Capacity MBtuh Integ	Total System KW	Capacity MBtuh Total	Capacity MBtuh Integ	Total System KW	Capacity MBtuh Total	Capacity MBtuh Integ	Total System KW	Capacity MBtuh Total	Capacity MBtuh Integ	Total System KW
60 (15.6)	1050	23.95	20.99	2.22	29.99	29.99	2.51	34.51	34.51	2.69	36.57	36.57	2.79	43.09	43.09	3.12
	1200	24.20	21.21	2.20	30.20	30.20	2.45	34.82	34.82	2.67	36.95	36.95	2.74	43.39	43.39	2.88
70 (21.1)	1050	23.16	20.29	2.44	28.99	28.99	2.73	33.82	33.82	2.98	35.98	35.98	3.08	42.90	42.90	3.44
	1200	23.44	20.54	2.41	29.28	29.28	2.71	33.60	33.60	2.90	35.59	35.59	3.00	43.10	43.10	3.30
80 (26.7)	1050	22.38	19.61	2.67	28.03	28.03	2.99	32.65	32.65	3.24	34.87	34.87	3.37	42.66	42.66	3.75
	1200	22.66	19.86	2.64	28.36	28.36	2.94	33.00	33.00	3.21	34.97	34.97	3.29	42.80	42.80	3.69

PERFORMANCE DATA-STANDARD ECM INDOOR MOTOR

Heating Capacity

48XT-A36 Low

INDOOR AIR		OUTDOOR COIL ENTERING AIR TEMPERATURES deg F														
		-10°F (-23.3°C)			0°F (-17.7°C)			10°F (-12.2°C)			17°F (-8.3°C)			20°F (-6.6°C)		
EDB °F (°C)	CFM	Capacity MBtuh Total	Capacity MBtuh Integ	Total System KW	Capacity MBtuh Total	Capacity MBtuh Integ	Total System KW	Capacity MBtuh Total	Capacity MBtuh Integ	Total System KW	Capacity MBtuh Total	Capacity MBtuh Integ	Total System KW	Capacity MBtuh Total	Capacity MBtuh Integ	Total System KW
60 (15.6)	745	3.84	3.53	1.62	6.63	6.10	1.68	9.48	8.70	1.72	11.69	10.66	1.74	12.69	11.51	1.75
	850	3.91	3.60	1.62	6.71	6.17	1.67	9.61	8.82	1.70	11.84	10.80	1.71	12.85	11.66	1.72
70 (21.1)	745	3.10	2.86	1.82	5.88	5.41	1.89	8.83	8.10	1.93	11.03	10.06	1.95	12.02	10.90	1.96
	850	3.23	2.98	1.82	6.01	5.53	1.89	8.98	8.24	1.92	11.20	10.21	1.93	12.20	11.07	1.94
80 (26.7)	745	2.22	2.05	2.03	5.00	4.60	2.10	8.01	7.35	2.15	10.24	9.33	2.18	11.23	10.18	2.19
	850	2.34	2.16	2.04	5.12	4.71	2.11	8.17	7.49	2.14	10.42	9.50	2.16	11.42	10.36	2.16

48XT-A36 Low Con't.

INDOOR AIR		OUTDOOR COIL ENTERING AIR TEMPERATURES deg F														
		30°F (-1.1°C)			40°F (4.4°C)			47°F (8.3°C)			50°F (10°C)			60°F (15.5°C)		
EDB °F (°C)	CFM	Capacity MBtuh Total	Capacity MBtuh Integ	Total System KW	Capacity MBtuh Total	Capacity MBtuh Integ	Total System KW	Capacity MBtuh Total	Capacity MBtuh Integ	Total System KW	Capacity MBtuh Total	Capacity MBtuh Integ	Total System KW	Capacity MBtuh Total	Capacity MBtuh Integ	Total System KW
60 (15.6)	745	16.25	14.24	1.78	20.33	20.33	1.81	23.56	23.56	1.84	25.01	25.01	1.85	30.27	30.27	1.90
	850	16.46	14.42	1.74	20.70	20.70	1.76	23.96	23.96	1.78	25.46	25.46	1.78	30.88	30.88	1.82
70 (21.1)	745	15.55	13.62	1.99	19.45	19.45	2.02	22.61	22.61	2.05	24.02	24.02	2.06	29.09	29.09	2.11
	850	15.78	13.82	1.95	19.78	19.78	1.97	23.00	23.00	1.98	24.44	24.44	1.99	29.68	29.68	2.02
80 (26.7)	745	14.74	12.91	2.22	18.60	18.60	2.26	21.56	21.56	2.28	22.94	22.94	2.29	27.95	27.95	2.35
	850	14.98	13.13	2.18	18.90	18.90	2.20	21.95	21.95	2.21	23.44	23.44	2.22	28.50	28.50	2.25

LEGEND

Cap.— Heating Capacity (1000 Btuh) (Includes Indoor-Fan Motor Heat)

db — Dry Bulb

kW — Total Power Input (Includes Compressor Motor Power Input Outdoor-Fan Motor Input, and Indoor-Fan Motor Input)

rh — Relative Humidity

NOTES:

Integrated capacity is maximum (instantaneous) capacity less the effect of frost on the outdoor coil and the heat required to defrost it.

PERFORMANCE DATA-STANDARD ECM INDOOR MOTOR

Cooling Extended Performance Table

48XT-A42 High Cool

EVAPORATOR AIR		CONDENSER ENTERING AIR TEMPERATURES																	
		75°F (23.8°C)			85°F (29.4°C)			95°F (35°C)			105°F (40.5°C)			115°F (46.1°C)			125°F (51.6°C)		
CFM	EWB °F (°C)	Capacity MBtuh		Total System KW	Capacity MBtuh		Total System KW	Capacity MBtuh		Total System KW	Capacity MBtuh		Total System KW	Capacity MBtuh		Total System KW	Capacity MBtuh		Total System KW
		Total	Sens		Total	Sens		Total	Sens		Total	Sens		Total	Sens		Total	Sens	
1225	57 (13.9)	40.34	40.34	2.76	38.56	38.56	3.03	36.60	36.60	3.32	35.21	35.21	3.58	32.79	32.79	3.93	29.04	29.04	4.37
	62 (16.7)	41.24	37.05	2.77	39.06	36.02	3.04	36.71	36.39	3.33	35.21	35.21	3.57	32.79	32.79	3.93	29.04	29.04	4.37
	63* (17.2)	42.00	29.94	2.78	39.74	28.96	3.05	37.29	27.90	3.34	35.56	27.16	3.58	32.52	25.89	3.92	28.29	24.13	4.35
	67 (19.4)	45.04	30.93	2.84	42.59	29.93	3.10	39.90	28.85	3.39	38.03	28.11	3.63	34.81	26.85	3.98	30.12	25.04	4.40
	72 (22.2)	49.21	24.77	2.91	46.48	23.77	3.17	43.50	22.69	3.46	44.33	22.99	3.52	41.24	21.88	3.87	32.75	18.96	4.47
1400	57 (13.9)	41.96	41.96	2.82	40.04	40.04	3.10	37.92	37.92	3.39	36.46	36.46	3.64	33.86	33.86	4.00	29.82	29.82	4.43
	62 (16.7)	42.17	39.80	2.83	40.04	40.04	3.10	37.92	37.92	3.39	36.46	36.46	3.64	33.86	33.86	4.00	29.82	29.82	4.43
	63* (17.2)	42.81	31.90	2.84	40.45	30.89	3.10	37.88	29.81	3.39	36.05	29.03	3.63	31.99	27.35	4.03	28.59	25.92	4.40
	67 (19.4)	45.87	33.01	2.89	43.30	31.98	3.15	40.50	30.88	3.44	38.65	30.16	3.69	35.36	28.88	4.03	30.38	26.96	4.45
	72 (22.2)	50.09	26.04	2.96	47.23	25.02	3.23	44.13	23.92	3.51	45.09	24.26	3.58	41.83	23.12	3.93	32.98	20.13	4.51

48XT-A42 Low Cool

EVAPORATOR AIR		CONDENSER ENTERING AIR TEMPERATURES																	
		75°F (23.8°C)			85°F (29.4°C)			95°F (35°C)			105°F (40.5°C)			115°F (46.1°C)			125°F (51.6°C)		
CFM	EWB °F (°C)	Capacity MBtuh		Total System KW	Capacity MBtuh		Total System KW	Capacity MBtuh		Total System KW	Capacity MBtuh		Total System KW	Capacity MBtuh		Total System KW	Capacity MBtuh		Total System KW
		Total	Sens		Total	Sens		Total	Sens		Total	Sens		Total	Sens		Total	Sens	
855	57 (13.9)	28.20	28.20	1.89	27.00	27.00	2.11	25.67	25.67	2.35	24.16	24.16	2.63	22.43	22.43	2.94	20.50	20.50	3.29
	62 (16.7)	28.99	24.09	1.89	27.46	23.43	2.11	26.46	22.99	2.31	24.16	24.16	2.63	22.43	22.43	2.94	20.48	20.48	3.29
	63* (17.2)	29.61	19.56	1.89	28.04	18.92	2.11	26.32	18.23	2.35	24.41	17.47	2.63	22.29	16.64	2.95	19.93	15.73	3.30
	67 (19.4)	32.05	20.31	1.89	30.33	19.65	2.11	28.43	18.94	2.35	26.33	18.16	2.62	23.99	17.30	2.92	21.52	16.42	3.28
	72 (22.2)	35.41	16.51	1.89	33.47	15.84	2.10	31.36	15.12	2.34	31.76	15.26	2.28	26.40	13.49	2.90	24.07	12.74	3.25
975	57 (13.9)	29.53	29.53	1.90	28.23	28.23	2.12	26.78	26.78	2.36	25.14	25.14	2.64	23.27	23.27	2.95	21.29	21.29	3.29
	62 (16.7)	29.77	25.99	1.90	28.23	28.23	2.12	26.78	26.78	2.36	25.14	25.14	2.64	23.27	23.27	2.95	21.29	21.29	3.29
	63* (17.2)	30.34	20.89	1.90	28.69	20.23	2.12	26.88	19.52	2.37	24.87	18.73	2.64	22.66	17.88	2.96	20.20	16.93	3.31
	67 (19.4)	32.81	21.71	1.91	31.00	21.04	2.12	29.00	20.30	2.36	28.00	19.93	2.59	24.36	18.62	2.93	21.97	17.76	3.29
	72 (22.2)	36.21	17.40	1.91	34.17	16.72	2.12	31.95	16.00	2.35	31.03	15.68	2.58	30.23	15.42	2.60	24.42	13.57	3.26

See page 30 for cooling notes.

PERFORMANCE DATA-STANDARD ECM INDOOR MOTOR

Heating Capacity

48XT-A42 High

INDOOR AIR		OUTDOOR COIL ENTERING AIR TEMPERATURES														
		-10°F (-23.3°C)			0°F (-17.7°C)			10°F (-12.2°C)			17°F (-8.3°C)			20°F (-6.6°C)		
EDB °F (°C)	CFM	Capacity MBtuh Total	Capacity MBtuh Integ	Total System KW	Capacity MBtuh Total	Capacity MBtuh Integ	Total System KW	Capacity MBtuh Total	Capacity MBtuh Integ	Total System KW	Capacity MBtuh Total	Capacity MBtuh Integ	Total System KW	Capacity MBtuh Total	Capacity MBtuh Integ	Total System KW
60 (15.6)	1225	10.65	9.80	2.06	13.99	12.87	2.19	17.85	16.39	2.32	21.02	19.17	2.41	22.53	20.43	2.46
	1400	10.79	9.92	2.08	14.15	13.02	2.20	18.04	16.56	2.32	21.26	19.39	2.41	22.79	20.67	2.45
70 (21.1)	1225	10.16	9.34	2.28	13.49	12.42	2.42	17.32	15.89	2.55	20.37	18.58	2.66	21.80	19.77	2.70
	1400	10.32	9.49	2.29	13.66	12.57	2.42	17.52	16.08	2.55	20.60	18.78	2.65	22.06	20.01	2.69
80 (26.7)	1225	9.53	8.77	2.49	12.89	11.86	2.64	16.69	15.32	2.80	19.70	17.96	2.91	21.10	19.14	2.96
	1400	9.69	8.92	2.51	13.07	12.03	2.65	16.90	15.51	2.80	19.94	18.18	2.90	21.36	19.37	2.94

48XT-A42 High Con't.

INDOOR AIR		OUTDOOR COIL ENTERING AIR TEMPERATURES														
		30°F (-1.1°C)			40°F (4.4°C)			47°F (8.3°C)			50°F (10°C)			60°F (15.5°C)		
EDB °F (°C)	CFM	Capacity MBtuh Total	Capacity MBtuh Integ	Total System KW	Capacity MBtuh Total	Capacity MBtuh Integ	Total System KW	Capacity MBtuh Total	Capacity MBtuh Integ	Total System KW	Capacity MBtuh Total	Capacity MBtuh Integ	Total System KW	Capacity MBtuh Total	Capacity MBtuh Integ	Total System KW
60 (15.6)	1225	28.26	24.77	2.62	35.01	35.01	2.81	40.36	40.36	2.97	42.96	42.96	3.05	51.37	51.37	3.25
	1400	28.60	25.06	2.60	35.38	35.38	2.79	40.37	40.37	2.91	43.00	43.00	2.96	51.50	51.50	3.19
70 (21.1)	1225	27.38	23.99	2.87	33.83	33.83	3.06	39.05	39.05	3.22	41.60	41.60	3.31	50.54	50.54	3.54
	1400	27.71	24.28	2.85	34.27	34.27	3.03	39.50	39.50	3.20	41.96	41.96	3.27	50.80	50.80	3.48
80 (26.7)	1225	26.37	23.10	3.13	32.67	32.67	3.34	37.72	37.72	3.50	40.19	40.19	3.59	49.42	49.42	3.92
	1400	26.72	23.41	3.11	33.12	33.12	3.30	38.23	38.23	3.46	40.71	40.71	3.55	49.70	49.70	3.78

LEGEND

Cap.— Heating Capacity (1000 Btuh) (Includes Indoor-Fan Motor Heat)

db — Dry Bulb

kW — Total Power Input (Includes Compressor Motor Power Input Outdoor-Fan Motor Input, and Indoor-Fan Motor Input)

rh — Relative Humidity

NOTES:

Integrated capacity is maximum (instantaneous) capacity less the effect of frost on the outdoor coil and the heat required to defrost it.

PERFORMANCE DATA-STANDARD ECM INDOOR MOTOR

Heating Capacity

48XT-A42 Low

INDOOR AIR		OUTDOOR COIL ENTERING AIR TEMPERATURES														
		-10°F (-23.3°C)			0°F (-17.7°C)			10°F (-12.2°C)			17°F (-8.3°C)			20°F (-6.6°C)		
EDB °F (°C)	CFM	Capacity MBtuh Total	Capacity MBtuh Integ	Total System KW	Capacity MBtuh Total	Capacity MBtuh Integ	Total System KW	Capacity MBtuh Total	Capacity MBtuh Integ	Total System KW	Capacity MBtuh Total	Capacity MBtuh Integ	Total System KW	Capacity MBtuh Total	Capacity MBtuh Integ	Total System KW
60 (15.6)	855	5.94	5.46	1.70	8.96	8.24	1.77	12.26	11.25	1.84	14.78	13.47	1.89	15.91	14.43	1.91
	975	6.03	5.55	1.69	9.08	8.36	1.76	12.41	11.39	1.82	14.95	13.63	1.86	16.10	14.60	1.88
70 (21.1)	855	5.11	4.70	1.90	8.13	7.48	1.97	11.48	10.54	2.05	14.01	12.77	2.11	15.14	13.73	2.13
	975	5.22	4.80	1.90	8.27	7.61	1.97	11.65	10.69	2.03	14.20	12.95	2.08	15.35	13.92	2.10
80 (26.7)	855	4.12	3.79	2.11	7.14	6.57	2.18	10.55	9.68	2.27	13.09	11.94	2.33	14.24	12.91	2.36
	975	4.22	3.88	2.11	7.27	6.69	2.18	10.72	9.84	2.26	13.29	12.12	2.31	14.46	13.11	2.33

48XT-A42 Low Con't.

INDOOR AIR		OUTDOOR COIL ENTERING AIR TEMPERATURES														
		30°F (-1.1°C)			40°F (4.4°C)			47°F (8.3°C)			50°F (10°C)			60°F (15.5°C)		
EDB °F (°C)	CFM	Capacity MBtuh Total	Capacity MBtuh Integ	Total System KW	Capacity MBtuh Total	Capacity MBtuh Integ	Total System KW	Capacity MBtuh Total	Capacity MBtuh Integ	Total System KW	Capacity MBtuh Total	Capacity MBtuh Integ	Total System KW	Capacity MBtuh Total	Capacity MBtuh Integ	Total System KW
60 (15.6)	855	19.99	17.51	1.99	24.57	24.57	2.07	28.27	28.27	2.15	30.02	30.02	2.18	36.61	36.61	2.32
	975	20.23	17.72	1.95	24.89	24.89	2.02	28.72	28.72	2.08	30.53	30.53	2.11	37.32	37.32	2.23
70 (21.1)	855	19.18	16.81	2.21	23.66	23.66	2.31	27.19	27.19	2.38	28.83	28.83	2.42	35.19	35.19	2.56
	975	19.44	17.03	2.17	23.98	23.98	2.25	27.60	27.60	2.31	29.31	29.31	2.34	35.86	35.86	2.47
80 (26.7)	855	18.27	16.01	2.46	22.72	22.72	2.56	26.12	26.12	2.64	27.72	27.72	2.68	33.63	33.63	2.83
	975	18.54	16.24	2.41	23.04	23.04	2.50	26.53	26.53	2.57	28.17	28.17	2.60	34.44	34.44	2.73

LEGEND

Cap. — Heating Capacity (1000 Btuh) (Includes Indoor-Fan Motor Heat)

db — Dry Bulb

kW — Total Power Input (Includes Compressor Motor Power Input Outdoor-Fan Motor Input, and Indoor-Fan Motor Input)

rh — Relative Humidity

NOTES:

Integrated capacity is maximum (instantaneous) capacity less the effect of frost on the outdoor coil and the heat required to defrost it.

PERFORMANCE DATA-STANDARD ECM INDOOR MOTOR

Cooling Extended Performance Table

48XT-A48 High Cool

EVAPORATOR AIR		CONDENSER ENTERING AIR TEMPERATURES																	
		75°F (23.8°C)			85°F (29.4°C)			95°F (35°C)			105°F (40.5°C)			115°F (46.1°C)			125°F (51.6°C)		
CFM	EWB °F (°C)	Capacity MBtuh Total	Capacity MBtuh Sens	Total System KW	Capacity MBtuh Total	Capacity MBtuh Sens	Total System KW	Capacity MBtuh Total	Capacity MBtuh Sens	Total System KW	Capacity MBtuh Total	Capacity MBtuh Sens	Total System KW	Capacity MBtuh Total	Capacity MBtuh Sens	Total System KW	Capacity MBtuh Total	Capacity MBtuh Sens	Total System KW
1400	57 (13.9)	44.39	44.39	3.40	42.70	42.70	3.71	40.87	40.87	4.05	38.88	38.88	4.43	36.67	36.67	4.84	34.16	34.16	5.30
	62 (16.7)	45.43	38.20	3.41	43.33	37.29	3.72	41.11	36.31	4.05	38.87	38.87	4.43	36.67	36.67	4.84	35.30	35.30	4.84
	63* (17.2)	46.29	30.85	3.42	44.11	29.95	3.73	41.79	29.00	4.06	39.28	28.00	4.43	36.54	26.91	4.84	33.51	25.73	5.29
	67 (19.4)	50.04	32.01	3.46	47.71	31.11	3.77	45.21	30.16	4.11	42.50	29.14	4.48	41.00	28.60	4.43	36.24	26.85	5.34
	72 (22.2)	55.24	25.88	3.53	52.68	24.98	3.84	49.93	24.04	4.18	46.96	23.04	4.55	45.43	22.53	4.52	40.04	20.75	5.41
1600	57 (13.9)	46.32	46.32	3.48	44.10	44.10	3.79	42.54	42.54	4.13	40.41	40.41	4.51	38.04	38.04	4.92	36.62	36.62	4.93
	62 (16.7)	46.57	41.09	3.48	44.43	44.43	3.79	42.54	42.54	4.13	41.40	41.40	4.51	38.04	38.04	4.92	36.61	36.61	4.93
	63* (17.2)	47.25	32.81	3.49	44.97	31.89	3.80	42.55	30.92	4.13	39.95	29.90	4.50	37.11	28.80	4.91	33.97	27.59	5.36
	67 (19.4)	51.07	34.10	3.53	48.62	33.18	3.84	46.00	32.20	4.18	43.19	31.17	4.55	40.12	30.06	4.96	38.36	29.43	4.97
	72 (22.2)	56.36	27.17	3.60	53.67	26.25	3.91	50.80	25.29	4.25	47.69	24.26	4.62	44.30	23.15	5.03	42.55	22.59	5.06

48XT-A48 Low Cool

EVAPORATOR AIR		CONDENSER ENTERING AIR TEMPERATURES																	
		75°F (23.8°C)			85°F (29.4°C)			95°F (35°C)			105°F (40.5°C)			115°F (46.1°C)			125°F (51.6°C)		
CFM	EWB °F (°C)	Capacity MBtuh Total	Capacity MBtuh Sens	Total System KW	Capacity MBtuh Total	Capacity MBtuh Sens	Total System KW	Capacity MBtuh Total	Capacity MBtuh Sens	Total System KW	Capacity MBtuh Total	Capacity MBtuh Sens	Total System KW	Capacity MBtuh Total	Capacity MBtuh Sens	Total System KW	Capacity MBtuh Total	Capacity MBtuh Sens	Total System KW
965	57 (13.9)	31.49	31.49	2.22	30.30	30.30	2.49	29.02	29.02	2.78	27.63	27.63	3.12	26.10	26.10	3.51	24.40	24.40	3.96
	62 (16.7)	32.49	27.41	2.21	30.96	26.74	2.48	29.34	26.03	2.78	27.64	27.57	3.12	26.10	26.10	3.51	24.40	24.40	3.97
	63* (17.2)	33.19	22.28	2.21	31.62	21.62	2.48	29.95	20.92	2.78	28.14	20.18	3.12	26.19	19.39	3.52	24.04	18.53	3.97
	67 (19.4)	36.14	23.21	2.21	34.45	22.54	2.47	32.65	21.84	2.77	30.72	21.10	3.10	28.62	20.30	3.49	26.31	19.44	3.94
	72 (22.2)	40.19	19.02	2.21	38.34	18.36	2.46	36.37	17.67	2.75	34.25	16.93	3.08	31.95	16.14	3.46	29.40	15.29	3.90
1100	57 (13.9)	33.04	33.04	2.24	31.76	31.76	2.50	30.39	30.39	2.80	28.90	28.90	3.13	27.27	27.27	3.52	25.45	25.45	3.97
	62 (16.7)	33.42	29.57	2.23	31.85	28.86	2.50	30.39	30.39	2.80	28.90	28.90	3.13	27.27	27.27	3.52	25.45	25.45	3.97
	63* (17.2)	34.05	23.76	2.23	32.40	23.08	2.50	30.64	22.37	2.80	28.77	21.61	3.14	26.73	20.81	3.53	24.50	19.92	3.99
	67 (19.4)	37.06	24.78	2.23	35.29	24.10	2.49	33.40	23.38	2.78	31.39	22.62	3.12	29.20	21.81	3.51	26.79	20.93	3.95
	72 (22.2)	41.21	20.03	2.23	39.26	19.35	2.48	37.19	18.64	2.77	34.96	17.88	3.10	32.54	17.07	3.48	29.89	16.19	3.92

See page 30 for cooling notes.

PERFORMANCE DATA-STANDARD ECM INDOOR MOTOR

Heating Capacity

48XT-A48 High

INDOOR AIR		OUTDOOR COIL ENTERING AIR TEMPERATURES														
		-10°F (-23.3°C)			0°F (-17.7°C)			10°F (-12.2°C)			17°F (-8.3°C)			20°F (-6.6°C)		
EDB °F (°C)	CFM	Capacity MBtuh Total	Capacity MBtuh Integ	Total System KW	Capacity MBtuh Total	Capacity MBtuh Integ	Total System KW	Capacity MBtuh Total	Capacity MBtuh Integ	Total System KW	Capacity MBtuh Total	Capacity MBtuh Integ	Total System KW	Capacity MBtuh Total	Capacity MBtuh Integ	Total System KW
60 (15.6)	1400	13.33	12.27	2.19	17.37	15.98	2.40	21.89	20.10	2.63	25.47	23.23	2.80	27.14	24.61	2.88
	1600	13.53	12.45	2.21	17.59	16.18	2.42	22.14	20.32	2.64	25.78	23.51	2.80	27.47	24.92	2.88
70 (21.1)	1400	12.72	11.71	2.39	16.74	15.40	2.62	21.24	19.50	2.87	24.70	22.52	3.05	26.27	23.83	3.13
	1600	12.94	11.91	2.41	16.98	15.62	2.64	21.52	19.75	2.88	25.00	22.79	3.05	26.61	24.14	3.13
80 (26.7)	1400	11.86	10.91	2.58	15.90	14.63	2.84	20.40	18.73	3.11	23.85	21.74	3.31	25.40	23.04	3.40
	1600	12.09	11.12	2.61	16.17	14.88	2.86	20.70	19.00	3.12	24.18	22.05	3.31	25.75	23.36	3.40

48XT-A48 High Con't.

INDOOR AIR		OUTDOOR COIL ENTERING AIR TEMPERATURES														
		30°F (-1.1°C)			40°F (4.4°C)			47°F (8.3°C)			50°F (10°C)			60°F (15.5°C)		
EDB °F (°C)	CFM	Capacity MBtuh Total	Capacity MBtuh Integ	Total System KW	Capacity MBtuh Total	Capacity MBtuh Integ	Total System KW	Capacity MBtuh Total	Capacity MBtuh Integ	Total System KW	Capacity MBtuh Total	Capacity MBtuh Integ	Total System KW	Capacity MBtuh Total	Capacity MBtuh Integ	Total System KW
60 (15.6)	1400	33.39	29.26	3.16	40.69	40.69	3.49	46.59	46.59	3.77	49.36	49.36	3.91	58.12	58.12	4.29
	1600	33.83	29.64	3.15	41.16	41.16	3.48	46.62	46.62	3.72	49.42	49.42	3.83	58.16	58.16	4.22
70 (21.1)	1400	32.29	28.29	3.43	39.25	39.25	3.77	44.95	44.95	4.05	47.65	47.65	4.19	57.17	57.17	4.65
	1600	32.73	28.68	3.41	39.82	39.82	3.74	45.50	45.50	4.04	48.12	48.12	4.17	57.23	57.23	4.57
80 (26.7)	1400	31.08	27.23	3.71	37.81	37.81	4.07	43.28	43.28	4.37	45.87	45.87	4.51	55.65	55.65	5.07
	1600	31.53	27.62	3.69	38.39	38.39	4.04	43.94	43.94	4.33	46.54	46.54	4.48	55.70	55.70	4.92

LEGEND

Cap.— Heating Capacity (1000 Btuh) (Includes Indoor-Fan Motor Heat)

db — Dry Bulb

kW — Total Power Input (Includes Compressor Motor Power Input Outdoor-Fan Motor Input, and Indoor-Fan Motor Input)

rh — Relative Humidity

NOTES:

Integrated capacity is maximum (instantaneous) capacity less the effect of frost on the outdoor coil and the heat required to defrost it.

PERFORMANCE DATA-STANDARD ECM INDOOR MOTOR

Heating Capacity

48XT-A48 Low

INDOOR AIR		OUTDOOR COIL ENTERING AIR TEMPERATURES														
		-10°F (-23.3°C)			0°F (-17.7°C)			10°F (-12.2°C)			17°F (-8.3°C)			20°F (-6.6°C)		
EDB °F (°C)	CFM	Capacity MBtuh Total	Capacity MBtuh Integ	Total System KW	Capacity MBtuh Total	Capacity MBtuh Integ	Total System KW	Capacity MBtuh Total	Capacity MBtuh Integ	Total System KW	Capacity MBtuh Total	Capacity MBtuh Integ	Total System KW	Capacity MBtuh Total	Capacity MBtuh Integ	Total System KW
60 (15.6)	965	5.86	5.39	1.86	9.04	8.32	1.96	12.71	11.67	2.05	15.64	14.26	2.12	17.00	15.42	2.15
	1100	5.95	5.47	1.86	9.16	8.42	1.95	12.85	11.79	2.03	15.80	14.41	2.09	17.18	15.58	2.12
70 (21.1)	965	5.21	4.80	2.08	8.43	7.76	2.19	12.11	11.12	2.30	15.01	13.69	2.37	16.35	14.83	2.41
	1100	5.32	4.89	2.08	8.56	7.88	2.18	12.27	11.27	2.28	15.20	13.86	2.34	16.55	15.01	2.37
80 (26.7)	965	4.44	4.09	2.32	7.66	7.05	2.43	11.36	10.42	2.55	14.25	12.99	2.64	15.58	14.13	2.68
	1100	4.55	4.18	2.33	7.79	7.17	2.43	11.53	10.58	2.54	14.45	13.17	2.61	15.80	14.33	2.64

48XT-A48 Low Con't.

INDOOR AIR		OUTDOOR COIL ENTERING AIR TEMPERATURES														
		30°F (-1.1°C)			40°F (4.4°C)			47°F (8.3°C)			50°F (10°C)			60°F (15.5°C)		
EDB °F (°C)	CFM	Capacity MBtuh Total	Capacity MBtuh Integ	Total System KW	Capacity MBtuh Total	Capacity MBtuh Integ	Total System KW	Capacity MBtuh Total	Capacity MBtuh Integ	Total System KW	Capacity MBtuh Total	Capacity MBtuh Integ	Total System KW	Capacity MBtuh Total	Capacity MBtuh Integ	Total System KW
60 (15.6)	965	21.99	19.27	2.26	27.98	27.98	2.40	32.83	32.83	2.51	35.07	35.07	2.56	43.68	43.68	2.76
	1100	22.24	19.48	2.22	28.40	28.40	2.33	33.33	33.33	2.43	35.65	35.65	2.47	44.63	44.63	2.66
70 (21.1)	965	21.27	18.64	2.53	26.97	26.97	2.66	31.72	31.72	2.78	33.87	33.87	2.84	41.97	41.97	3.05
	1100	21.53	18.87	2.48	27.36	27.36	2.59	32.20	32.20	2.70	34.41	34.41	2.74	42.84	42.84	2.93
80 (26.7)	965	20.45	17.92	2.81	26.04	26.04	2.96	30.48	30.48	3.08	32.72	32.72	3.15	40.41	40.41	3.37
	1100	20.73	18.16	2.76	26.39	26.39	2.89	30.97	30.97	2.99	33.22	33.22	3.04	41.15	41.15	3.24

LEGEND

Cap. — Heating Capacity (1000 Btuh) (Includes Indoor-Fan Motor Heat)

db — Dry Bulb

kW — Total Power Input (Includes Compressor Motor Power Input Outdoor-Fan Motor Input, and Indoor-Fan Motor Input)

rh — Relative Humidity

NOTES:

Integrated capacity is maximum (instantaneous) capacity less the effect of frost on the outdoor coil and the heat required to defrost it.

PERFORMANCE DATA-STANDARD ECM INDOOR MOTOR

Cooling Extended Performance Table

48XT0-A60 High Cool

EVAPORATOR AIR		CONDENSER ENTERING AIR TEMPERATURES																	
		75°F (23.8°C)			85°F (29.4°C)			95°F (35°C)			105°F (40.5°C)			115°F (46.1°C)			125°F (51.6°C)		
CFM	EWB °F (°C)	Capacity MBtuh		Total System KW	Capacity MBtuh		Total System KW	Capacity MBtuh		Total System KW	Capacity MBtuh		Total System KW	Capacity MBtuh		Total System KW	Capacity MBtuh		Total System KW
		Total	Sens		Total	Sens		Total	Sens		Total	Sens		Total	Sens		Total	Sens	
2000	57 (13.9)	58.24	58.24	4.41	55.10	55.10	4.84	54.80	54.80	4.69	52.40	52.40	5.23	46.70	46.70	6.40	42.90	42.90	7.02
	62 (16.7)	58.46	54.46	4.42	55.79	55.79	4.84	55.36	55.36	4.69	52.73	52.73	5.23	46.94	46.94	6.40	43.20	43.20	7.02
	63* (17.2)	59.23	43.33	4.42	56.27	42.07	4.85	55.68	41.83	4.69	52.48	40.49	5.22	45.80	37.74	6.37	41.56	36.02	6.97
	67 (19.4)	63.56	44.86	4.50	60.35	43.59	4.92	56.88	42.24	5.38	56.62	42.14	5.33	48.97	39.21	6.44	44.37	37.49	7.05
	72 (22.2)	69.55	35.33	4.59	66.01	34.07	5.02	62.20	32.73	5.48	58.07	31.30	5.99	53.51	29.74	6.54	48.46	28.03	7.15
1750	57 (13.9)	56.01	56.01	4.29	53.76	53.76	4.72	51.30	51.30	5.19	50.80	50.80	5.08	45.20	45.20	6.27	41.70	41.70	6.89
	62 (16.7)	57.19	50.62	4.31	54.45	49.37	4.73	51.51	48.01	5.19	50.93	47.74	5.08	45.50	45.50	6.27	41.99	41.99	6.89
	63* (17.2)	58.18	40.75	4.32	55.35	39.51	4.74	52.28	38.20	5.20	51.66	37.95	5.10	45.27	35.27	6.26	41.16	33.59	6.87
	67 (19.4)	62.48	42.11	4.39	59.41	40.86	4.81	57.00	39.90	5.18	55.71	39.39	5.21	48.47	36.58	6.34	44.00	34.88	6.94
	72 (22.2)	68.41	33.69	4.48	65.01	32.46	4.91	61.35	31.14	5.37	57.37	29.72	5.88	52.97	28.19	6.44	48.09	26.53	7.04

48XT0-A60 Low Cool

EVAPORATOR AIR		CONDENSER ENTERING AIR TEMPERATURES																	
		75°F (23.8°C)			85°F (29.4°C)			95°F (35°C)			105°F (40.5°C)			115°F (46.1°C)			125°F (51.6°C)		
CFM	EWB °F (°C)	Capacity MBtuh		Total System KW	Capacity MBtuh		Total System KW	Capacity MBtuh		Total System KW	Capacity MBtuh		Total System KW	Capacity MBtuh		Total System KW	Capacity MBtuh		Total System KW
		Total	Sens		Total	Sens		Total	Sens		Total	Sens		Total	Sens		Total	Sens	
1200	57 (13.9)	39.88	39.88	2.70	38.34	38.34	3.04	36.64	36.64	3.43	34.74	34.74	3.87	31.90	31.90	4.37	29.70	29.70	4.94
	62 (16.7)	40.94	35.96	2.69	39.01	35.09	3.04	36.90	34.14	3.43	34.90	34.90	3.87	32.60	32.60	4.37	30.16	30.16	4.94
	63* (17.2)	41.76	29.14	2.69	39.78	28.27	3.04	37.61	27.34	3.42	35.23	26.33	3.87	32.61	25.22	4.37	29.69	24.04	4.96
	67 (19.4)	45.04	30.17	2.68	42.87	29.29	3.02	40.50	28.35	3.40	37.91	27.31	3.84	35.04	26.21	4.33	31.84	25.00	4.90
	72 (22.2)	49.59	24.40	2.68	47.18	23.52	3.01	44.52	22.56	3.38	41.68	21.55	3.80	38.47	20.43	4.28	34.93	19.21	4.84
1370	57 (13.9)	41.69	41.69	2.72	40.00	40.00	3.07	37.90	37.90	3.45	35.45	35.45	3.89	33.62	33.62	4.38	30.90	30.90	4.95
	62 (16.7)	41.98	38.83	2.72	40.02	40.02	3.07	38.18	38.18	3.45	36.13	36.13	3.89	33.82	33.82	4.38	31.19	31.19	4.95
	63* (17.2)	42.72	31.09	2.72	40.63	30.20	3.07	38.35	29.24	3.45	35.86	28.21	3.89	33.13	27.09	4.40	30.10	25.87	4.98
	67 (19.4)	46.03	32.23	2.72	43.75	31.34	3.05	41.27	30.36	3.43	38.55	29.32	3.86	35.56	28.18	4.36	32.25	26.93	4.92
	72 (22.2)	50.62	25.68	2.71	48.09	24.78	3.04	45.37	23.83	3.41	42.32	22.77	3.83	39.01	21.64	4.31	35.34	20.40	4.86

See page 30 for cooling notes.

PERFORMANCE DATA-STANDARD ECM INDOOR MOTOR

Heating Capacity

48XT-A60 High

INDOOR AIR		OUTDOOR COIL ENTERING AIR TEMPERATURES														
		-10°F (-23.3°C)			0°F (-17.7°C)			10°F (-12.2°C)			17°F (-8.3°C)			20°F (-6.6°C)		
EDB °F (°C)	CFM	Capacity MBtuh Total	Capacity MBtuh Integ	Total System KW	Capacity MBtuh Total	Capacity MBtuh Integ	Total System KW	Capacity MBtuh Total	Capacity MBtuh Integ	Total System KW	Capacity MBtuh Total	Capacity MBtuh Integ	Total System KW	Capacity MBtuh Total	Capacity MBtuh Integ	Total System KW
60 (15.6)	1750	17.01	15.65	3.08	21.62	19.89	3.31	27.05	24.83	3.55	31.57	28.78	3.73	33.69	30.55	3.82
	2000	17.24	15.86	3.12	21.87	20.13	3.34	27.37	25.12	3.57	31.93	29.11	3.74	34.08	30.90	3.83
70 (21.1)	1750	16.62	15.29	3.40	21.22	19.53	3.65	26.51	24.33	3.91	30.80	28.08	4.10	32.92	29.86	4.19
	2000	16.88	15.53	3.44	21.50	19.78	3.69	26.82	24.62	3.93	31.18	28.43	4.11	33.32	30.22	4.20
80 (26.7)	1750	16.04	14.75	3.72	20.64	18.99	4.01	25.93	23.80	4.29	30.06	27.41	4.49	31.99	29.01	4.59
	2000	16.31	15.01	3.77	20.95	19.27	4.04	26.26	24.11	4.31	30.42	27.74	4.50	32.41	29.39	4.59

48XT-A60 High Con't.

INDOOR AIR		OUTDOOR COIL ENTERING AIR TEMPERATURES														
		30°F (-1.1°C)			40°F (4.4°C)			47°F (8.3°C)			50°F (10°C)			60°F (15.5°C)		
EDB °F (°C)	CFM	Capacity MBtuh Total	Capacity MBtuh Integ	Total System KW	Capacity MBtuh Total	Capacity MBtuh Integ	Total System KW	Capacity MBtuh Total	Capacity MBtuh Integ	Total System KW	Capacity MBtuh Total	Capacity MBtuh Integ	Total System KW	Capacity MBtuh Total	Capacity MBtuh Integ	Total System KW
60 (15.6)	1750	41.80	36.62	4.14	50.24	50.24	4.44	56.80	56.80	4.63	59.20	59.20	4.67	64.80	64.80	4.75
	2000	41.90	36.71	4.12	50.80	50.80	4.36	56.90	56.90	4.40	59.50	59.50	4.42	65.10	65.10	4.50
70 (21.1)	1750	40.71	35.67	4.52	49.81	49.81	4.91	56.00	56.00	5.13	58.75	58.75	5.26	63.56	63.56	5.44
	2000	41.19	36.09	4.53	50.10	50.10	4.84	56.40	56.40	4.99	59.10	59.10	5.02	64.30	64.30	5.11
80 (26.7)	1750	39.61	34.70	4.93	48.50	48.50	5.35	55.46	55.46	5.63	58.45	58.45	5.74	62.90	62.90	6.23
	2000	40.12	35.15	4.92	48.79	48.79	5.29	55.90	55.90	5.56	58.90	58.90	5.66	63.50	63.50	5.78

LEGEND

Cap.— Heating Capacity (1000 Btuh) (Includes Indoor-Fan Motor Heat)

db — Dry Bulb

kW — Total Power Input (Includes Compressor Motor Power Input Outdoor-Fan Motor Input, and Indoor-Fan Motor Input)

rh — Relative Humidity

NOTES:

Integrated capacity is maximum (instantaneous) capacity less the effect of frost on the outdoor coil and the heat required to defrost it.

PERFORMANCE DATA-STANDARD ECM INDOOR MOTOR

Heating Capacity

48XT-A60 Low

INDOOR AIR		OUTDOOR COIL ENTERING AIR TEMPERATURES														
		-10°F (-23.3°C)			0°F (-17.7°C)			10°F (-12.2°C)			17°F (-8.3°C)			20°F (-6.6°C)		
EDB °F (°C)	CFM	Capacity MBtuh Total	Capacity MBtuh Integ	Total System KW	Capacity MBtuh Total	Capacity MBtuh Integ	Total System KW	Capacity MBtuh Total	Capacity MBtuh Integ	Total System KW	Capacity MBtuh Total	Capacity MBtuh Integ	Total System KW	Capacity MBtuh Total	Capacity MBtuh Integ	Total System KW
60 (15.6)	1200	9.91	9.11	2.55	13.43	12.36	2.64	17.58	16.14	2.72	20.92	19.07	2.78	22.45	20.36	2.81
	1370	10.02	9.22	2.55	13.56	12.48	2.62	17.73	16.28	2.69	21.10	19.23	2.74	22.64	20.54	2.76
70 (21.1)	1200	9.46	8.70	2.89	12.98	11.94	2.99	17.10	15.69	3.08	20.40	18.60	3.15	21.92	19.88	3.18
	1370	9.59	8.82	2.89	13.13	12.08	2.97	17.29	15.87	3.05	20.61	18.79	3.10	22.14	20.08	3.13
80 (26.7)	1200	8.82	8.11	3.25	12.35	11.36	3.36	16.47	15.12	3.46	19.75	18.01	3.54	21.27	19.29	3.57
	1370	8.96	8.24	3.25	12.52	11.52	3.34	16.67	15.30	3.43	19.98	18.22	3.49	21.51	19.51	3.52

48XT-A60 Low Con't.

INDOOR AIR		OUTDOOR COIL ENTERING AIR TEMPERATURES														
		30°F (-1.1°C)			40°F (4.4°C)			47°F (8.3°C)			50°F (10°C)			60°F (15.5°C)		
EDB °F (°C)	CFM	Capacity MBtuh Total	Capacity MBtuh Integ	Total System KW	Capacity MBtuh Total	Capacity MBtuh Integ	Total System KW	Capacity MBtuh Total	Capacity MBtuh Integ	Total System KW	Capacity MBtuh Total	Capacity MBtuh Integ	Total System KW	Capacity MBtuh Total	Capacity MBtuh Integ	Total System KW
60 (15.6)	1200	28.14	24.66	2.91	35.04	35.04	3.03	40.62	40.62	3.13	43.31	43.31	3.18	53.58	53.58	3.38
	1370	28.41	24.90	2.84	35.43	35.43	2.94	41.18	41.18	3.03	43.95	43.95	3.07	54.06	54.06	3.19
70 (21.1)	1200	27.54	24.13	3.28	34.06	34.06	3.40	39.50	39.50	3.51	42.04	42.04	3.56	51.83	51.83	3.77
	1370	27.81	24.37	3.21	34.46	34.46	3.31	40.01	40.01	3.40	42.63	42.63	3.44	52.74	52.74	3.62
80 (26.7)	1200	26.82	23.50	3.69	33.24	33.24	3.82	38.34	38.34	3.92	40.91	40.91	3.99	50.19	50.19	4.21
	1370	27.11	23.76	3.61	33.60	33.60	3.71	38.85	38.85	3.80	41.41	41.41	3.85	51.04	51.04	4.04

LEGEND

Cap. — Heating Capacity (1000 Btuh) (Includes Indoor-Fan Motor Heat)

db — Dry Bulb

kW — Total Power Input (Includes Compressor Motor Power Input Outdoor-Fan Motor Input, and Indoor-Fan Motor Input)

rh — Relative Humidity

NOTES:

Integrated capacity is maximum (instantaneous) capacity less the effect of frost on the outdoor coil and the heat required to defrost it.

PERFORMANCE DATA (CONT)

Multiplication Factors

HEATER kW RATING	VOLTAGE DISTRIBUTION V/3/60	MULTIPLICATION FACTOR
240	200	.69
	208	.75
	230	.92
	240	1.00

Example: 15.0 kW (at 240v) heater on 208v
= 15.0 (.75 mult factor)
= 11.25 capacity at 208v

LEGEND
BF— Bypass Factor
edb— Entering Dry–Bulb
Ewb — Entering Wet–Bulb
kW — Total Unit Power Input
ldb— Leaving Dry–Bulb
lwb— Leaving Wet–Bulb
SHC — Sensible Heat Capacity (1000 Btuh)
TC — Total Capacity (1000 Btuh) (net)

*At 75°F (23.8°C) entering dry bulb (Tennessee Valley Authority [TVA] rating conditions); all other at 80°F (26.6°C) entering dry bulb.

COOLING NOTES:
1. Ratings are net; they account for the effects of the evaporator–fan motor power and heat.
2. Direct interpolation is permissible. Do not extrapolate.
3. The following formulas may be used:

$$^{t}ldb = {}^{t}edb - \frac{\text{Sensible capacity (Btuh)}}{1.10 \times cfm}$$

^{t}lwb = Wet–bulb temperature corresponding to enthalpy air leaving evaporator coil (^{h}lwb)

$$^{h}lwb = {}^{h}ewb - \frac{\text{total capacity (Btuh)}}{4.5 \times cfm}$$

Where: ^{h}ewb = Enthalpy of air entering evaporator coil

4. The SHC is based on 80°F (26.6°C) edb temperature of air entering evaporator coil. Below 80°F (26.6°C) edb, subtract (corr factor x cfm) from SHC.
Above 80°F (26.6°C) edb, add (corr factor x cfm) to SHC.
Correction Factor = 1.10 x (1 + BF) x (edb – 80).

5. Integrated capacity is maximum (instantaneous) capacity less the effect of frost on the outdoor coil and the heat required to defrost it.

Natural Gas Orifice Sizes and Manifold Pressure

Nameplate Input, High Stage (Btu/hr)		ALTITUDE OF INSTALLATION (FT. [m] ABOVE SEA LEVEL) U.S.A.*				
		0 to 2000 [0 to 610]	2001 to 3000* [610 to 914]	3001 to 4000 [915 to 1219]	4001 to 5000 [1220 to 1524]	5001 to 6000 [1524 to 1829]
40000	Orifice No. (Qty)	44 (2)	45 (2)†	48 (2)†	48 (2)†	48 (2)†
	Manifold Press. High / Low (in. W.C.)	3.2 /1.4	3.2 /1.4	3.8 /1.6	3.5 /1.5	3.2 /1.4
60000	Orifice No. (Qty)	44 (3)	45 (3)†	48 (3)†	48 (3)†	48 (3)†
	Manifold Press. High / Low (in. W.C.)	3.2 /1.4	3.2 /1.4	3.8 /1.6	3.5 /1.5	3.2 /1.4
90000	Orifice No. (Qty)	38 (3)	41 (3)†	41 (3)†	42 (3)†	42 (3)†
	Manifold Press. High / Low (in. W.C.)	3.6 /1.6	3.8 /1.6	3.4 /1.5	3.4 /1.5	3.2 /1.4
115000	Orifice No. (Qty)	33 (3)	36 (3)†	36 (3)†	36 (3)†	38 (3)†
	Manifold Press. High / Low (in. W.C.)	3.8 /1.7	3.8 /1.7	3.6 /1.6	3.3 /1.4	3.6 /1.5
130000	Orifice No. (Qty)	31 (3)	31 (3)	33 (3)†	33 (3)†	34 (3)†
	Manifold Press. High / Low (in. W.C.)	3.8 /1.7	3.2 /1.4	3.7 /1.6	3.4 /1.4	3.3 /1.4

*In the U.S.A., the input rating for altitudes above 2000 ft (610m) must be reduced by 4% for each 1000 ft (305 m) above sea level.
In Canada, the input rating for altitudes from 2001 to 4500 ft (611 to 1372 m) above sea level must be derated by 10% by an authorized gas conversion station or dealer.
For Canadian Installations from 2000 to 4500 ft, use U.S.A. column 2001 to 3000 ft (610 to 914 m).
† Orifices available through your distributor.
NOTE: Orifice sizes and manifold pressure settings are based on natural gas with a heating value of 1025 Btu/ft^3 and a specific gravity of .6.

Propane Gas Orifice Sizes and Manifold Pressure

Nameplate Input, High Stage (Btu/hr)		ALTITUDE OF INSTALLATION (FT. ABOVE SEA LEVEL) U.S.A.*†				
		0 to 2000 [0 to 610]	2001 to 3000* [610 to 914]	3001 to 4000 [915 to 1219]	4001 to 5000 [1220 to 1524]	5001 to 6000 [1524 to 1829]
40000	Orifice No. (Qty)	55 (2)	56 (2)	56 (2)	56 (2)	56 (2)
	Manifold Press. High / Low (in. W.C.)	10.0/5.0	11.0/6.0	11.0/5.5	11.0/5.0	10.7/4.8
60000	Orifice No. (Qty)	55 (2)	56 (2)	56 (2)	56 (2)	56 (2)
	Manifold Press. High / Low (in. W.C.)	10.0/5.0	11.0/6.0	11.0/5.5	11.0/5.0	10.7/4.8
90000	Orifice No. (Qty)	53 (3)	54 (3)	54 (3)	54 (3)	54 (3)
	Manifold Press. High / Low (in. W.C.)	10.0/5.4	11.0/6.4	11.0/5.9	11.0/5.4	11.0/5.0
115000	Orifice No. (Qty)	51 (3)	52 (3)	52 (3)	53 (3)	53 (3)
	Manifold Press. High / Low (in. W.C.)	10.0/5.4	11.0/5.0	10.6/4.8	11.0/6.1	11.0/5.5
130000	Orifice No. (Qty)	49 (3)	50 (3)	51 (3)	52 (3)	52 (3)
	Manifold Press. High / Low (in. W.C.)	10.0/5.4	11.0/4.8	11.0/4.9	11.0/5.2	11.0/5.0

*In the U.S.A., the input rating for altitudes above 2000 ft (610m) must be reduced by 4% for each 1000 ft (305 m) above sea level.
In Canada, the input rating for altitudes from 2001 to 4500 ft (611 to 1372 m) above sea level must be derated by 10% by an authorized gas conversion station or dealer.
For Canadian Installations from 2000 to 4500 ft, use U.S.A. column 2001 to 3000 ft (610 to 914 m).
† Use Kit No. CPLPCONV013A00 (0–2000 ft [0–610 m] above sea level. Use Kit No. CPLPCONV014A00 (2001–6000 ft [611–1829 m] above sea level.

High Altitude Compensation: Natural Gas

Nameplate Input, High Stage (Btu/hr)	Rated Heating Input (Btu/hr), Natural Gas at Installation Altitude Above Sea Level, U.S.A.*									
	0 to 2000 ft 0 to 610 m		2001 to 3000 ft* 610 to 914 m		3001 to 4000 ft 915 to 1219 m		4001 to 5000 ft 1220 to 1524 m		5001 to 6000 ft 1524 to 1829 m	
	High Stage	Low Stage	High Stage	Low Stage	High Stage	Low Stage	High Stage	Low Stage	High Stage	Low Stage
40000	40000	26000	36000	23400	34400	22300	32800	21300	31200	20300
60000	60000	39000	54000	35100	51600	33500	49200	32000	46800	30400
90000	90000	58500	81000	52700	77400	50300	73800	48000	70200	45600
115000	115000	75000	103500	67500	98900	64500	94300	61500	89700	58500
130000	130000	84500	117000	76100	111800	72700	106600	69300	101400	65900

*In the U.S.A., the input rating for altitudes above 2000 ft (610 m) must be reduced by 4% for each 1000 ft (305 m) above sea level.
In Canada, the input rating for altitudes from 2001 to 4500 (611 to 1372 m) above sea level must be derated by 10% by an authorized gas conversion station or dealer.
For Canadian Installations from 2000 to 4500 ft (610 to 1372 m), use U.S.A. column 2001 to 3000 ft (610 to 914 m).

High Altitude Compensation: Propane Gas

Nameplate Input, High Stage (Btu/hr)	Rated Heating Input (Btu/hr), LP Gas at Installation Altitude Above Sea Level, U.S.A.*									
	0 to 2000 ft 0 to 610 m		2001 to 3000 ft* 610 to 914 m		3001 to 4000 ft 915 to 1219 m		4001 to 5000 ft 1220 to 1524 m		5001 to 6000 ft 1524 to 1829 m	
	High Stage	Low Stage	High Stage	Low Stage	High Stage	Low Stage	High Stage	Low Stage	High Stage	Low Stage
40000	38000	26000	31700	23400	31700	22300	31700	21300	31200	20300
60000	57000	39000	47500	35100	47500	33500	47500	32000	46800	30400
90000	79000	58500	68900	52700	68900	50300	68600	48000	68600	45600
115000	103000	75000	100400	67500	98900	64500	83000	61500	83000	58500
130000	116000	84500	115500	76100	111800	72700	101300	69300	100400	65900

*In the U.S.A., the input rating for altitudes above 2000 ft (610 m) must be reduced by 4% for each 1000 ft (305 m) above sea level.
In Canada, the input rating for altitudes from 2001 to 4500 (611 to 1372 m) above sea level must be derated by 10% by an authorized gas conversion station or dealer.
For Canadian Installations from 2000 to 4500 ft (610 to 1372 m), use U.S.A. column 2001 to 3000 ft (610 to 914 m).

PERFORMANCE DATA (CONT)

Wet Coil Air Delivery - Low Stage

208/230 VOLT											
UNIT SIZE	SYSTEM SETTING	EXTERNAL STATIC PRESSURE (in. W.C.)									
		0.1	0.2	0.3	0.4	0.5	0.6	0.7	0.8	0.9	1.0
24	COMFORT (Default)	Variable based on Comfort Settings									
	EFFICIENCY	525	525	525	525	525	525	525	525	525	525
	MAX	600	600	600	600	600	600	600	600	600	600
30	COMFORT (Default)	Variable based on Comfort Settings									
	EFFICIENCY	613	613	613	613	613	613	613	613	613	613
	MAX	700	700	700	700	700	700	700	700	700	700
36	COMFORT (Default)	Variable based on Comfort Settings									
	EFFICIENCY	743	743	743	743	743	743	743	743	743	743
	MAX	850	850	850	850	850	850	850	850	850	850
42	COMFORT (Default)	Variable based on Comfort Settings									
	EFFICIENCY	853	853	853	853	853	853	853	853	853	853
	MAX	975	975	975	975	975	975	975	975	975	975
48	COMFORT (Default)	Variable based on Comfort Settings									
	EFFICIENCY	963	963	963	963	963	963	963	963	963	963
	MAX	1100	1100	1100	1100	1100	1100	1100	1100	1100	1100
60	COMFORT (Default)	Variable based on Comfort Settings									
	EFFICIENCY	1200	1200	1200	1200	1200	1200	1200	1200	1200	1200
	MAX	1372	1372	1372	1372	1372	1372	1372	1372	1372	1372

Wet Coil Air Delivery - High Stage

208/230 VOLT											
UNIT SIZE	SYSTEM SETTING	EXTERNAL STATIC PRESSURE (in. W.C)									
		0.1	0.2	0.3	0.4	0.5	0.6	0.7	0.8	0.9	1.0
24	COMFORT (Default)	Variable based on Comfort Settings									
	EFFICIENCY	700	700	700	700	700	700	700	700	700	700
	MAX	800	800	800	800	800	800	800	800	800	800
30	COMFORT (Default)	Variable based on Comfort Settings									
	EFFICIENCY	875	875	875	875	875	875	875	875	875	875
	MAX	1000	1000	1000	1000	1000	1000	1000	1000	1000	1000
36	COMFORT (Default)	Variable based on Comfort Settings									
	EFFICIENCY	1050	1050	1050	1050	1050	1050	1050	1050	1050	1050
	MAX	1200	1200	1200	1200	1200	1200	1200	1200	1200	1200
42	COMFORT (Default)	Variable based on Comfort Settings									
	EFFICIENCY	1225	1225	1225	1225	1225	1225	1225	1225	1225	1225
	MAX	1400	1400	1400	1400	1400	1400	1400	1400	1400	1400
48	COMFORT (Default)	Variable based on Comfort Settings									
	EFFICIENCY	1400	1400	1400	1400	1400	1400	1400	1400	1400	1400
	MAX	1600	1600	1600	1600	1600	1600	1600	1600	1600	1600
60	COMFORT (Default)	Variable based on Comfort Settings									
	EFFICIENCY	1750	1750	1750	1750	1750	1750	1750	1750	1750	1750
	MAX	2000	2000	2000	2000	2000	2000	2000	2000	2000	2000

Air delivery values are based on operating voltage of 230v, and wet coil. Filter and electric heater will not change air delivery values.

NOTES:

1. See User Interface instructions for more information on Max, Efficiency, and Comfort Settings
2. Efficiency Setting operates at 350 cfm/ton (nominal) and Max Setting operates at 400 cfm/ton (nominal)

TYPICAL PIPING AND WIRING

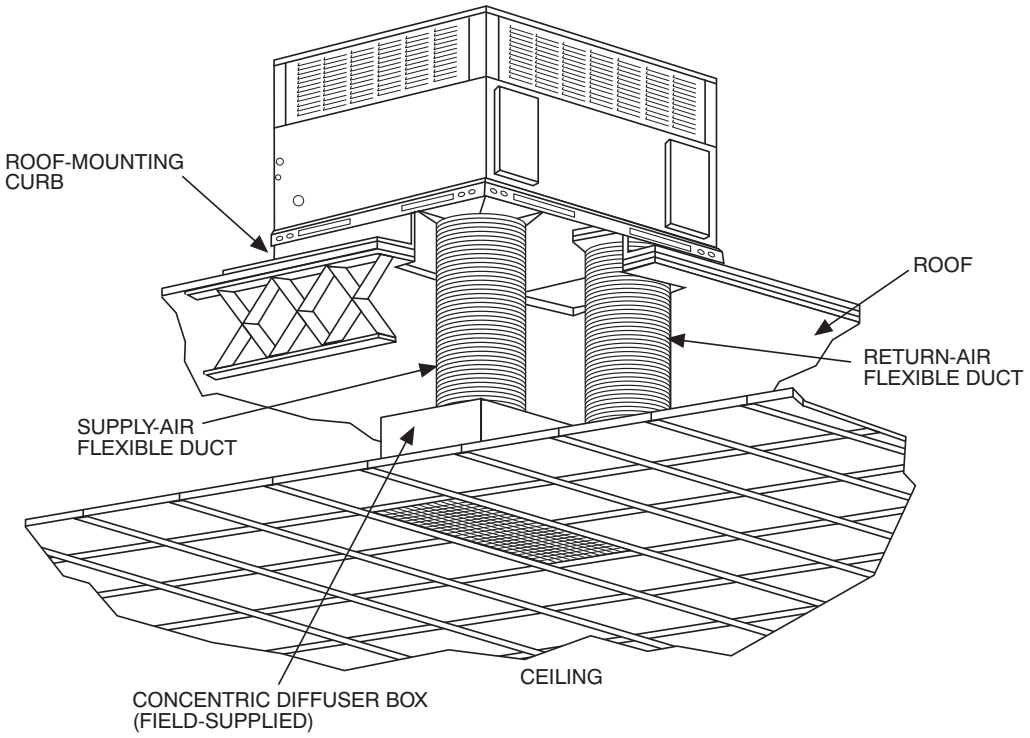

A09226

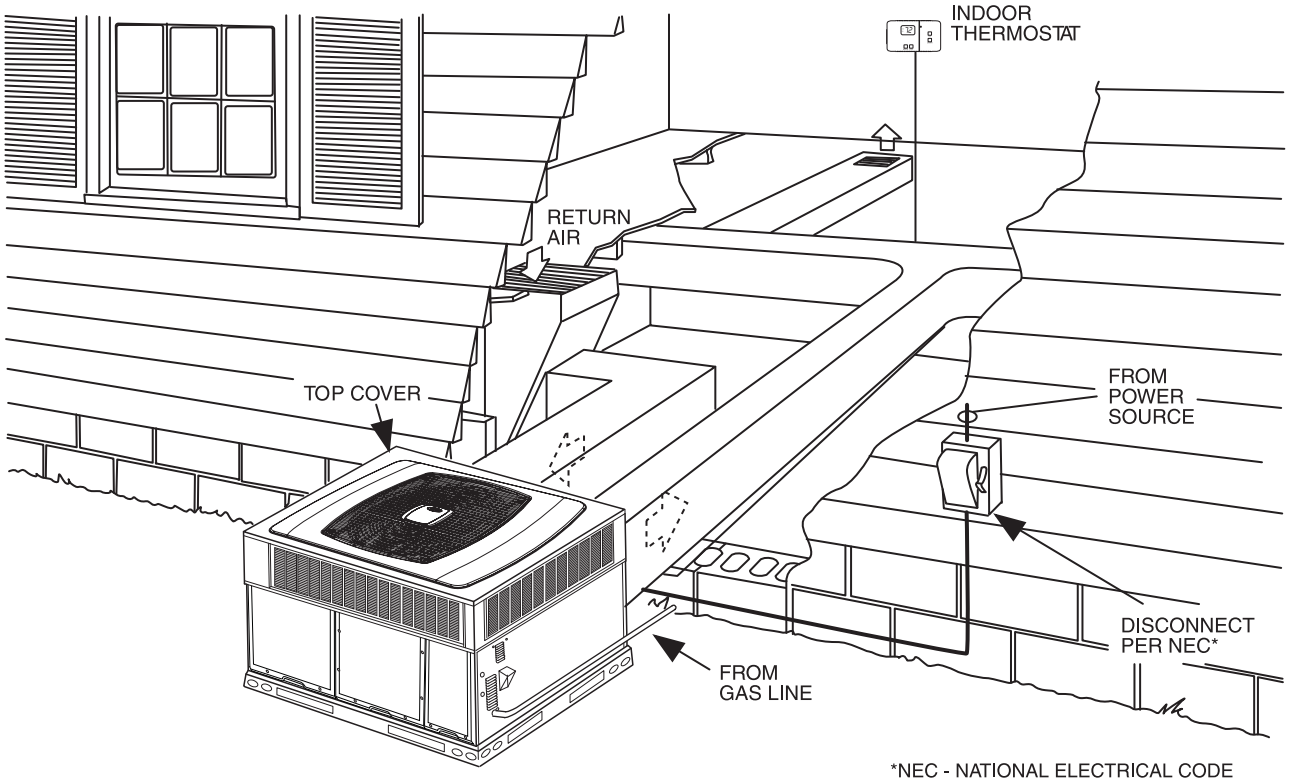

*NEC - NATIONAL ELECTRICAL CODE

A09237

48XT – A

APPLICATION DATA

Condensate trap — A 2-in. (50 mm) condensate trap must be field supplied.

Ductwork — Secure downflow discharge ductwork to roof curb. For horizontal discharge applications, attach ductwork to unit with flanges.

To convert a unit to downflow discharge — Units are equipped with factory-installed inserts in the downflow openings. Remove the inserts similar to removing an electrical knock-out. Leave on duct covers to seal the horizontal discharge openings in the unit. Units installed in horizontal discharge orientation do not require duct covers.

Minimum cooling ambient operating temperature — All standard units have a minimum ambient operating temperature of 55°F (12.7°C). With low-ambient cooling enabled at the UI, units can operate at temperatures down to 0°F (-17.7°C).

Maximum operating outdoor air temperature — Maximum outdoor operating air temperature for cooling is 125°F (51.6°C).

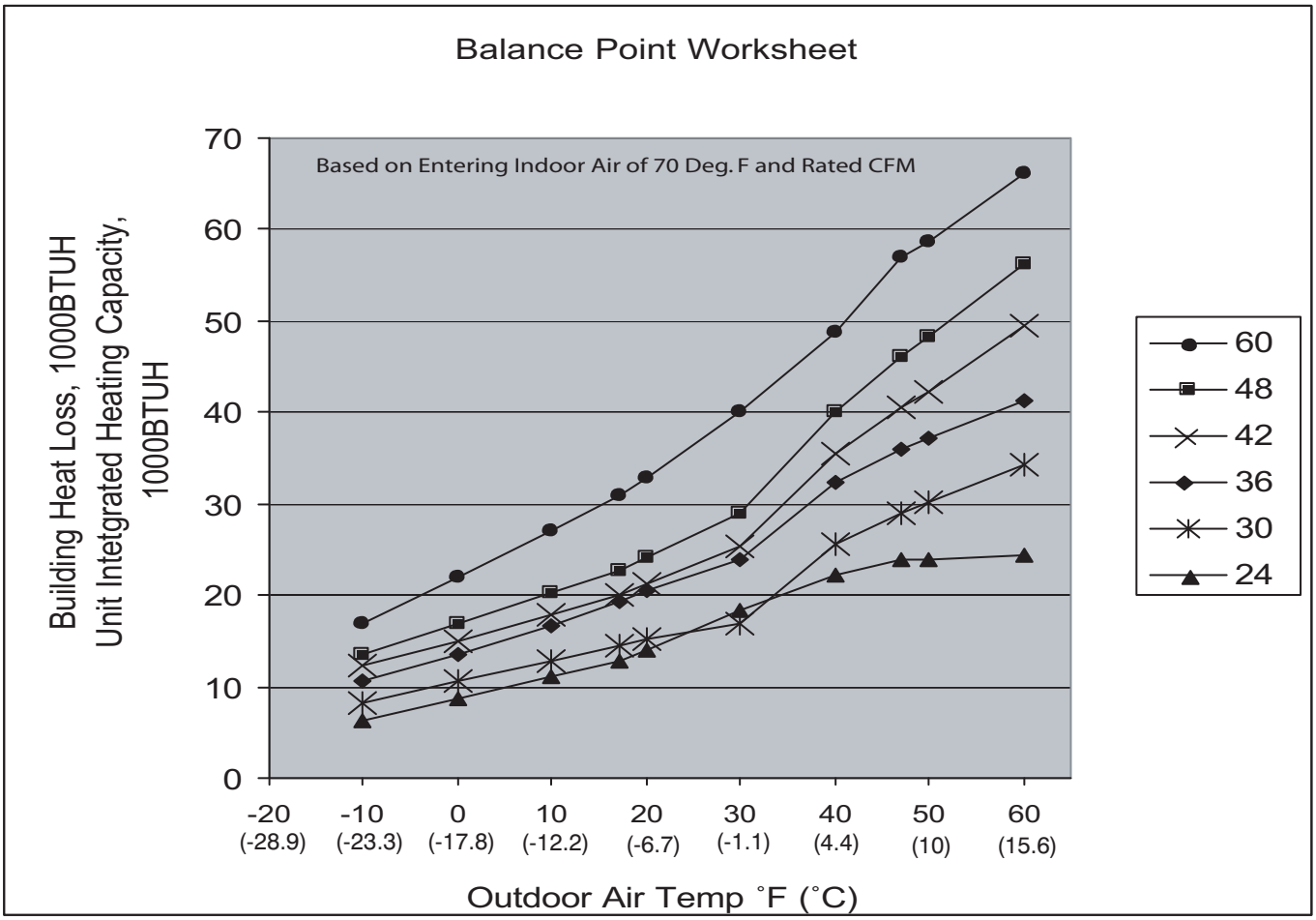

C03008

ELECTRICAL DATA

UNIT SIZE	V-PH-HZ	VOLTAGE RANGE		COMPRESSOR		OUTDOOR FAN MOTOR	INDOOR FAN MOTOR	IDM	POWER SUPPLY	
		Min	Max	RLA	LRA	FLA	FLA	FLA	MCA	MOCP
24040	208/230–1–60	187	253	15.3	52.0	0.9	4.3	.21	24.3	35
30040				16.8	70.0	0.9	4.3	.21	26.2	40
30060				16.8	70.0	0.9	4.3	.21	26.2	40
36060				16.7	82.0	0.9	6.8	.21	28.6	40
36090				16.7	82.0	0.9	6.8	.21	28.6	40
42060				21.8	96.0	0.9	6.8	.21	34.9	50
42090				21.8	96.0	0.9	6.8	.21	34.9	50
48090				27.8	96.0	1.5	6.8	.21	43.1	60
48115				27.8	96.0	1.5	6.8	.50	43.1	60
48130				27.8	96.0	1.5	6.8	.50	43.1	60
60090				27.3	118.0	1.9	9.1	.21	45.2	60
60115				27.3	118.0	1.9	9.1	.50	45.2	60
60130				27.3	118.0	1.9	9.1	.50	45.2	60

LEGEND

FLA - Full Load Amps
IDM - Inducer Motor
IFM - Indoor Fan Motor
LRA -Locked Rotor Amps
MCA - Minimum Circuit Amps
MOCP - Maximum Over Current Protection
OFM - Outdoor Fan Motor
RLA - Rated Load Amps

NOTES:
1. In compliance with NEC (National Electrical Code) requirements for multimotor and combination load equipment (refer to NEC Articles 430 and 440), the overcurrent protective device for the unit shall be Power Supply fuse or circuit breaker.
2. Minimum wire size is based on 60 C copper wire. If other than 60 C wire is used, or if length exceeds wire length in table, determine size from NEC.
3. Unbalanced 3-Phase Supply Voltage
   Never operate a motor where a phase imbalance in supply voltage is greater than 2%. Use the following formula to determine the percentage of voltage imbalance

   % Voltage imbalance

   $$= 100 \times \frac{\text{max voltage deviation from average voltage}}{\text{average voltage}}$$

EXAMPLE: Supply voltage is 230-3-60.

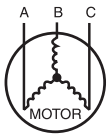

AB = 228 v
BC = 231 v
AC = 227 v

$$\text{Average Voltage} = \frac{228 + 231 + 227}{3} = \frac{686}{3} = 229$$

Determine maximum deviation from average voltage.
(AB) 229 - 228 = 1 v
(BC) 231 - 229 = 2 v
(AC) 229 - 227 = 2 v

Maximum deviation is 2 v.

Determine percent of voltage imbalance

$$\text{\% Voltage Imbalance} = 100 \times \frac{2}{229} = 0.8\%$$

This amount of phase imbalance is satisfactory as it is below the maximum allowable 2%.

IMPORTANT: If the supply voltage phase imbalance is more than 2%, contact your local electric utility company immediately.

A06564

CONNECTION WIRING SCHEMATIC — 230-1-60 GAS INPUTS 040, 060, 090 kBtu/hr

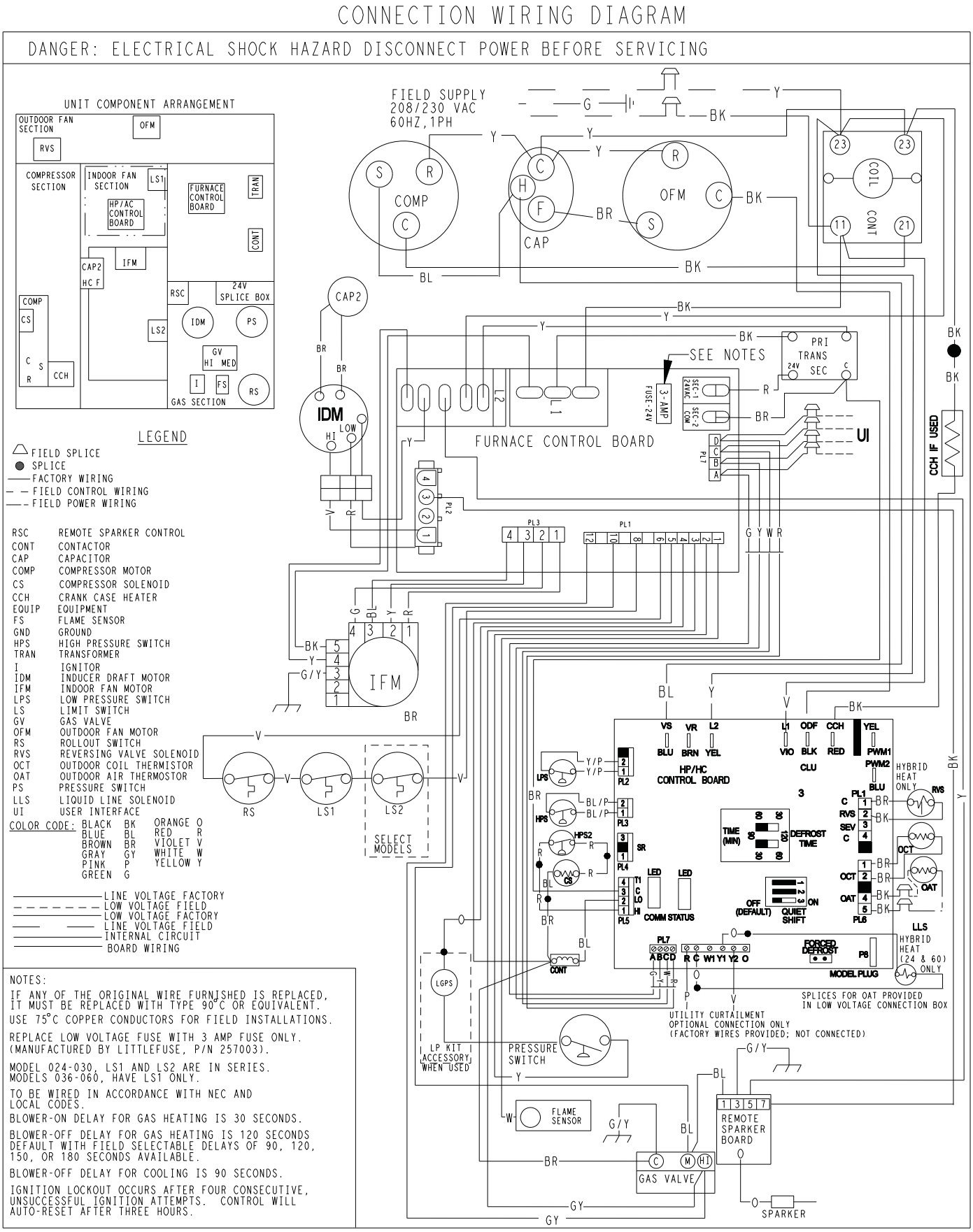

A10217C

LADDER WIRING SCHEMATIC — 230-1-60 GAS INPUTS 040, 060, 090 kBtu/hr

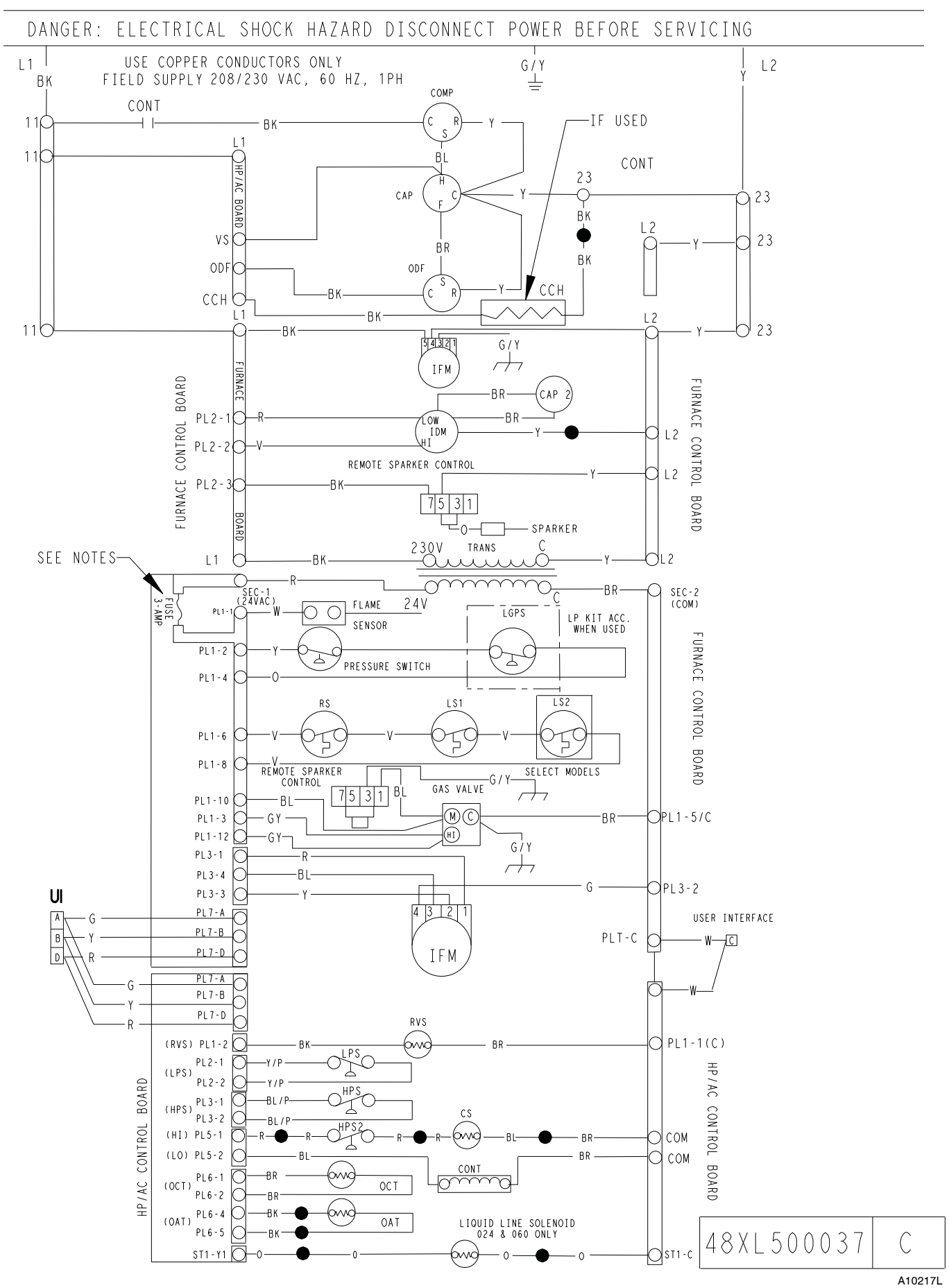

48XT--A

CONNECTION WIRING SCHEMATIC - 230-1-60 GAS INPUTS 115, 130 kBtu/hr

CONNECTION WIRING DIAGRAM

DANGER: ELECTRICAL SHOCK HAZARD DISCONNECT POWER BEFORE SERVICING

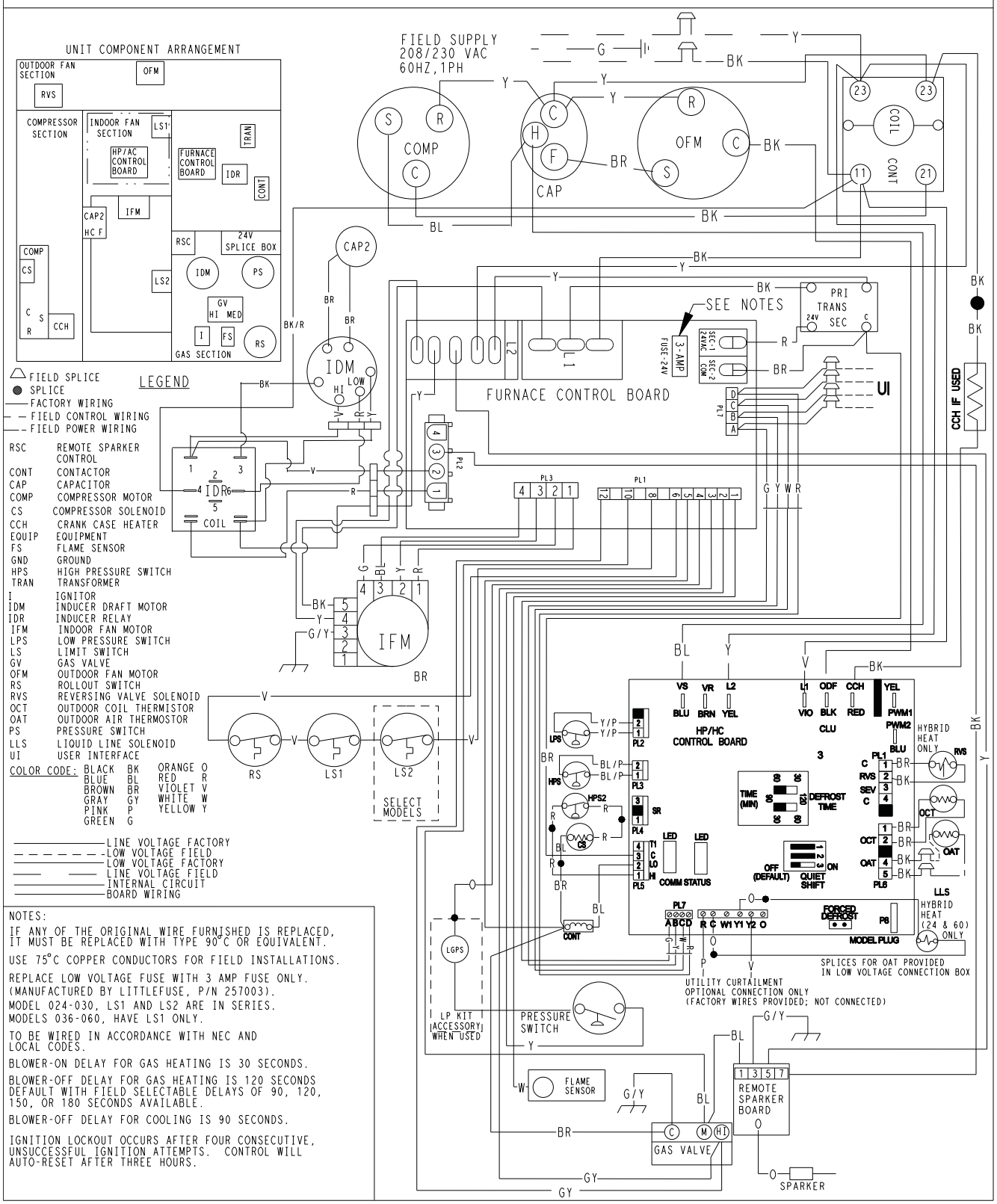

NOTES:

IF ANY OF THE ORIGINAL WIRE FURNISHED IS REPLACED, IT MUST BE REPLACED WITH TYPE 90°C OR EQUIVALENT.

USE 75°C COPPER CONDUCTORS FOR FIELD INSTALLATIONS.

REPLACE LOW VOLTAGE FUSE WITH 3 AMP FUSE ONLY. (MANUFACTURED BY LITTLEFUSE, P/N 257003).

MODEL 024-030, LS1 AND LS2 ARE IN SERIES. MODELS 036-060, HAVE LS1 ONLY.

TO BE WIRED IN ACCORDANCE WITH NEC AND LOCAL CODES.

BLOWER-ON DELAY FOR GAS HEATING IS 30 SECONDS.

BLOWER-OFF DELAY FOR GAS HEATING IS 120 SECONDS DEFAULT WITH FIELD SELECTABLE DELAYS OF 90, 120, 150, OR 180 SECONDS AVAILABLE.

BLOWER-OFF DELAY FOR COOLING IS 90 SECONDS.

IGNITION LOCKOUT OCCURS AFTER FOUR CONSECUTIVE, UNSUCCESSFUL IGNITION ATTEMPTS. CONTROL WILL AUTO-RESET AFTER THREE HOURS.

A10219C

LADDER WIRING SCHEMATIC - 230-1-60 GAS INPUTS 115, 130 kBtu/hr

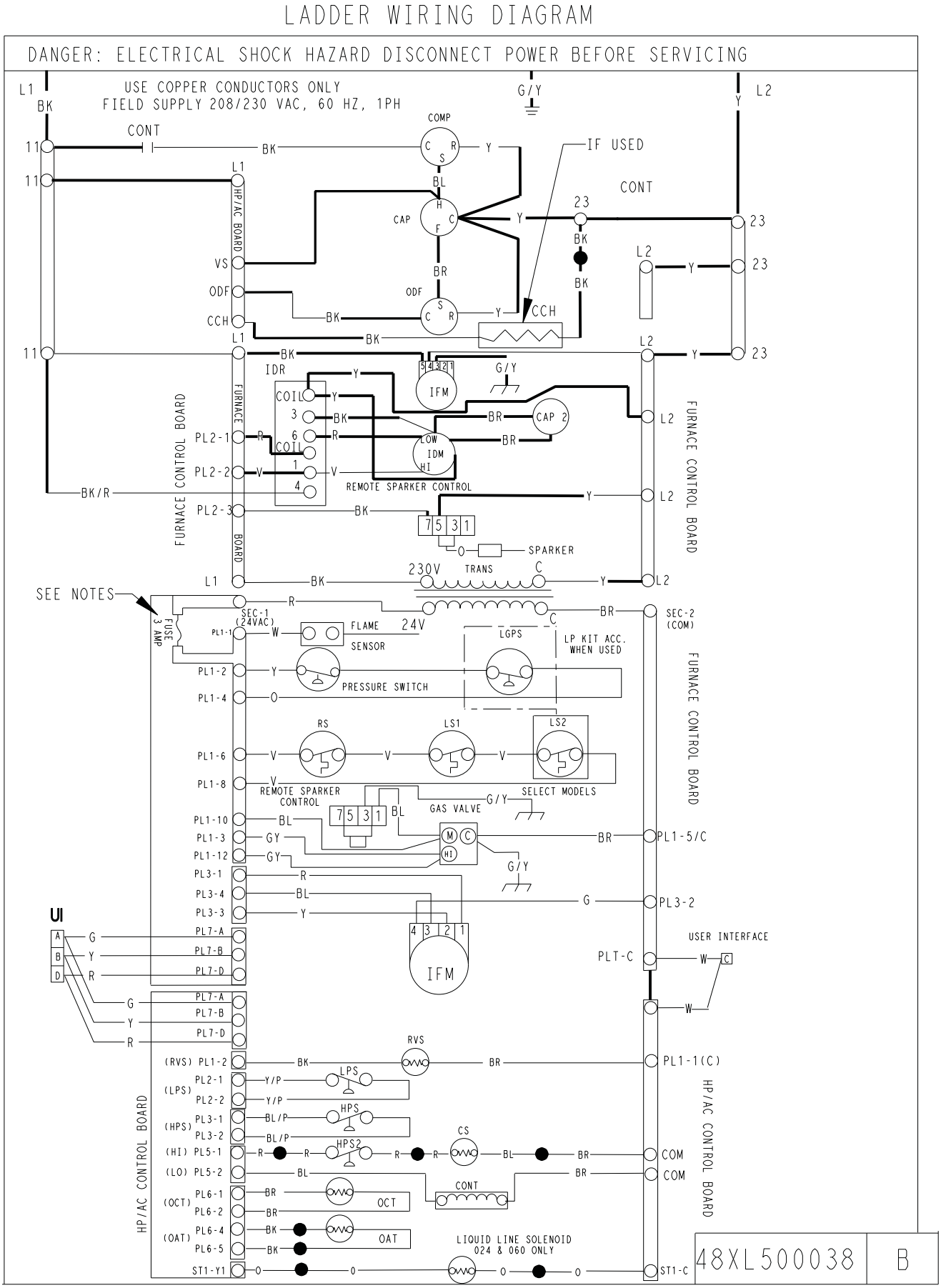

48XT--A

CONTROLS

Sequence of Operation

The 48XT-A Hybrid Heat unit is designed for installation with a communicating UI. This unit will not respond to commands provided by a common thermostat except under certain emergency situations described in Step 1—Start-Up and Troubleshooting.

The UI uses temperature, humidity and other data supplied from indoor and outdoor system components to control heating or cooling system for optimum comfort. The unit will be commanded by UI to supply airflow. The unit will operate the indoor blower at requested airflow for most modes.

HYBRID HEAT Sequence of Operation

The HYBRID HEAT sequence of operation, from satisfied to full heating, is as follows:

The system will attempt to satisfy the call for heat with the first stage heat pump. There is a ten-minute staging timer before switching to the second stage heat pump.

Second stage heat pump will run until call for heat is satisfied or for fifteen minutes. If after 15 minutes the call for heat still exists, the unit will stage to first stage gas.

For first stage gas the heat pump will be off unless the unit is in defrost. There is a ten-minute staging timer on first stage gas. If call for heat still exists after 10 minutes, the system will stage to second stage gas and run until the call for heat is satisfied.

NOTE: Heat stages are not shortened due to a 5 degree or higher demand. All stages are utilized for the full allotted time described above. If the UI determines it is making sufficient progress toward set point, it may not stage up after the staging timer has elapsed. Pressing the FAN and TEMPERATURE UP buttons simultaneously defeats cycle timers. See UI installation instructions for more detail.

Heat Pump Sequence of Operation

COOLING AND HEATING OPERATION

With a call for first stage cooling, the outdoor fan, reversing valve, and low stage compressor are energized. If low-stage cannot satisfy cooling demand, high-stage cooling is energized by the UI. After second stage is satisfied, the unit returns to low-stage operation until first stage is satisfied or until second stage is required again. When both first stage and second stage cooling are satisfied, the compressor will shut off. The reversing valve will remain energized until the control board power is removed or a call for heating in initiated. With a call for heating, the outdoor fan and compressor are energized. The compressor will operate in high or low stage operation, as needed to meet the heating demand. When the heating demand is satisfied, the compressor and fan will shut off. The reversing valve is de-energized in the heating mode.

NOTE: When two-stage unit is operating at low-stage, system vapor (suction) pressure will be higher than a standard single-stage system or high-stage operation.

NOTE: Outdoor fan motor will continue to operate for one minute after compressor shuts off, when outdoor ambient is greater than or equal to 100°F (38C).

GAS HEAT MODE AND ADJUSTMENTS

When the UI calls for gas heat, the Infinity furnace board performs a self-check, verifies the pressure switch is open, and starts the inducer on high speed.

1. Inducer Pre-purge Period: When the inducer motor comes up on high speed, the pressure switch closes, and the Infinity ignition control on the furnace board begins a 15 second pre-purge period. If the pressure switch fails to remain closed, the inducer will remain running. After the pressure switch re-closes, the Infinity ignition control will begin a new 15 second pre-purge period.
2. Trial-For-Ignition Sequence: The spark igniter will spark for 3 seconds. The main gas valve relay contact closes to energize the gas valve on low stage. After 5 seconds, the igniter is de-energized and a 2-second flame-proving period begins. NOTE: The unit always lights on high speed inducer and low stage gas valve operation.
3. Flame-Proving: When the burner flame is proved at the flame-proving sensor, the furnace control determines what heating stage to run based on feedback from the UI. If the UI is asking for low stage gas heat, the ignition control will change the inducer speed to low speed and keep the gas valve energized on low stage. If the UI is asking for high stage gas heat, the ignition control will maintain running the inducer on high speed and energize the gas valve's high stage relay to increase gas flow.

If the burner flame is not proved within 2 seconds, the control will close the gas valve and repeat the ignition sequence up to 3 more Trials-For-Ignition before going to Ignition-Lockout. Lockout will reset automatically after 3 hours, by momentarily interrupting 230 VAC power, or by interrupting 24 VAC power at SEC1 or SEC2 to the furnace board.

If flame is proved when there should be no flame present, control will lock out of Gas-Heating mode and operate the inducer motor until flame is no longer proved.

4. The indoor (evaporator) fan motor is energized 30 seconds after flame is established. When the UI is satisfied, the burners stop firing and the indoor (evaporator) fan motor shuts off after a field-selectable time off delay (90, 120, 150 or 180 seconds).

NOTE: If continuous fan is "ON", the indoor (evaporator) fan motor will switch to the gas heating speed on a call for heat and will resume continuous fan speed, once the UI is satisfied.

GUIDE SPECIFICATIONS

SINGLE-PACKAGED HEAT PUMP UNITS
CONSTANT VOLUME APPLICATION

HVAC GUIDE SPECIFICATIONS

SIZE RANGE: 2 TO 5 TONS, NOMINAL (COOLING)
MODEL NUMBER: 48XT-A

PART I - GENERAL

SYSTEM DESCRIPTION

Outdoor rooftop or ground mounted heat pump unit utilizing a hermetic, 2-stage scroll compressor for heating and cooling duty and optional electric heating. Unit shall discharge supply air vertically or horizontally as shown on contract drawings. Outdoor fan/coil section shall have a draw-thru design with vertical discharge for minimum sound levels.

QUALITY ASSURANCE

A. Unit shall be rated in accordance with AHRI Standards 210/240 and 270.

B. Unit shall be designed in accordance with UL Standard 1995 and ANSI Z21.47.

C. Unit shall be manufactured in a facility registered to ISO 9001 manufacturing quality standard

D. Unit shall be UL listed and c-UL certified as a total package for safety requirements.

E. Roof curb shall be designed to conform to NRCA Standards.

F. Insulation and adhesives shall meet NFPA 90A requirements for flame spread and smoke generation.

G. Cabinet insulation shall meet ASHRAE Standard 62P.

DELIVERY, STORAGE, AND HANDLING

Unit shall be stored and handled per manufacturer's recommendations.

PART 2- PRODUCTS

EQUIPMENT

A. General:

Factory-assembled, single-piece, heat pump. Contained within the unit enclosure shall be all factory wiring, piping, controls, refrigerant charge (R-410A), and special features required prior to field start-up.

B. Unit Cabinet:

1. Unit cabinet shall be constructed of phosphated, zinc-coated, prepainted steel capable of withstanding 500 hrs of salt spray.
2. Normal service shall be through a single removable cabinet panel.
3. The unit shall be constructed on a rust proof unit base that has an externally trapped, integrated sloped drain pan.
4. Indoor fan compartment top surface shall be insulated with a minimum 1/2-in. thick, flexible fiberglass insulation, coated on the air side and retained by adhesive and mechanical means. The indoor wall sections will be insulated with a foil-faced insulation capable of being wiped clean. Aluminum foil-faced fiberglass insulation shall be used in the entire indoor air cavity section.
5. Unit shall have a field-supplied condensate trap.

C. Fans:

1. The indoor fan shall be variable-speed motor and control, as shown on equipment drawings.
2. Fan wheel shall be made from steel, be double-inlet type. It shall have forward-curved blades with a corrosion-resistant finish and shall be dynamically balanced.
3. Outdoor fan shall be of the direct-driven propeller type with aluminum blades, riveted to corrosion-resistant steel spiders. It shall be dynamically balanced, and discharge air vertically.

D. Compressor:

1. Fully hermetic, 2-stage scroll compressors with factory-installed vibration isolation.
2. Scroll compressors shall be standard on all units.
3. Compressor Protection:
   Defrost control shall protect compressor by preventing "short cycling."

E. Coils:

1. Indoor and outdoor coils shall have aluminum plate fins mechanically bonded to seamless copper tubes with all joints brazed.
2. Tube sheet openings shall be bellied to prevent tube wear.

F. Refrigerant Metering Device:
Refrigerant metering device shall be of the single body, fixed orifice feed type (outdoor) and TXV (indoor).

G. Filters:
Filter section shall consist of field-installed, throw-away, 1-in. thick fiberglass filters of commercially available sizes.

H. Heating Section:

1. Induced-draft combustion type with energy saving direct spark ignition system and redundant main gas valve.
2. Pressure switch ensures adequate airflow for combustion from induced draft motor.
3. The heat exchangers shall be constructed of 409 stainless steel for corrosion resistance.
4. Burners shall be of the in-shot type constructed of aluminum coated steel.
5. All gas piping and electric power shall enter the unit cabinet at a single location.

I. Controls and Safeties:

1. Unit controls shall be complete with self-contained low voltage control circuit.
2. Units shall incorporate an internal compressor protector that provides reset capability.
3. Unit shall provide high- and low-/loss-of-charge pressure safety protection.

J. Operating Characteristics:

1. Unit shall be capable of starting and running at 125°F (51.6°C) ambient outdoor temperature, exceeding maximum load criteria of AHRI Standard 240.
2. Compressor shall be capable of operation down to 55°F (12.7°C) ambient outdoor temperature in cooling and -10°F (-23°C) in heating.
3. Unit shall be capable of low-ambient cooling from 55°F (12.7°C) down to 0°F (-17.7°C) ambient outdoor temperature with low-ambient cooling enabled on the UI.

K. Electrical Requirements:

All unit power wiring shall enter unit cabinet at a single location.

L. Motors:

1. Compressor motors shall be of the refrigerant-cooled type with line-break thermal and current overload protection.
2. All fan motors shall have permanently lubricated bearings and inherent automatic-reset thermal overload protection.
3. Outdoor fan motor shall be totally enclosed.
4. Evaporator fan motor to be full featured ECM Motor.

M. Grille

1. Louvered Grille:
   Louvered grille shall be standard on all units.

N. Low NOx (Natural Gas only) Option:

Shall provide NOx reduction to values below 40 nanograms/joule to meet California's and other localities' emission requirements.

O. Special Features:

1. Coil Options:
   Shall include factory-installed optional tin-plated indoor coil hairpins.
2. Infinity User Interface:
   To provide for two-stage heat pump heating, two-stage cooling, and electric (auxiliary) heat, in addition to manual or automatic changeover and indoor fan control.
3. Filter Rack Kit:
   Shall provide filter mounting for downflow and horizontal applications.
4. Flat Roof Curb:
   Curbs shall have seal strip and a wood nailer for flashing and shall be installed per manufacturer's instructions.
5. Flue Discharge Deflector:
   Directs flue gas exhaust 90 degrees upward from current discharge.
6. High Altitude Kit:
   Shall consist of natural gas orifices to compensate for gas heat operation at 2001 to 6000 ft (611-1829 m) above sea level.
7. Manual Outdoor Air Damper:
   Package shall consist of damper, bird screen, and rain hood which can be preset to admit outdoor air for year-round ventilation.
8. Natural-to-Propane Conversion Kit:
   Shall be complete with all required hardware to convert to liquid propane operation at 3.5 in. W.C. manifold pressure.
9. Propane-to-Natural Conversion Kit:
   Shall be complete with all hardware to convert to natural gas at standard altitude (0 to 2000 ft [0 to 610 m] above sea level).
10. Square-To-Round Duct Transitions:
    Shall have the ability to convert the supply and return openings from rectangular to round (24-48 sizes only).

Copyright 2012 Carrier Corp. • 7310 W. Morris St. • Indianapolis, IN 46231 Printed in U.S.A. Edition Date: 05/12 **Catalog No: 48XT-09PD**

Manufacturer reserves the right to change, at any time, specifications and designs without notice and without obligations. Replaces: 48XT-08PD