538T / 619P / 619R
Multi-zone Ductless Split System
Sizes 18 to 48

bryant®
Heating & Cooling Systems

Owner's Manual

TABLE OF CONTENTS

PAGE

A NOTE ABOUT SAFETY 2
MODEL NUMBER NOMENCLATURE 2
ENVIRONMENTAL NOTICE 4
SAFETY PRECAUTIONS 5
OPERATING INSTRUCTIONS 7
CARE AND MAINTENANCE 24
OPERATION TIPS 30
TROUBLESHOOTING TIPS 32

NOTE TO EQUIPMENT OWNER:

Please read this Owner's Information Manual carefully before installing and using this appliance and keep this manual for future reference.

For your convenience, please record the model and serial numbers of your new equipment in the spaces provided. This information, along with the installation data and dealer contact information, will be helpful should your system require maintenance or service.

UNIT INFORMATION

Model # _____

Serial # _____

INSTALLATION INFORMATION

Date Installed _____

DEALERSHIP CONTACT INFORMATION

Company Name: _____

Address: _____

_____

Phone Number: _____

Technician Name: _____

_____

A NOTE ABOUT SAFETY

Any time you see this symbol ⚠ in manuals, instructions and on the unit, be aware of the potential for personal injury. There are three levels of precaution:

DANGER identifies the most serious hazards which will result in severe personal injury or death.

WARNING signifies hazards that could result in personal injury or death.

CAUTION is used to identify unsafe practices which could result in minor personal injury or product and property damage.

NOTE is used to highlight suggestions which will result in enhanced installation, reliability, or operation.

⚠ WARNING

PERSONAL INJURY, DEATH AND / OR PROPERTY DAMAGE HAZARD

Failure to follow this warning could result in personal injury, death or property damage.

Improper installation, adjustment, alteration, service, maintenance, or use can cause explosion, fire, electrical shock, or other conditions which may cause personal injury or property damage. Consult a qualified installer, service agency, or your distributor or branch for information or assistance. The qualified installer or service agency must use factory-authorized kits or accessories when modifying this product.

Read and follow all instructions and warnings, including labels shipped with or attached to unit before operating your new air conditioner.

Model Numbers

System Tons	System Btuh	Volt- Ph @ 60Hz	Outdoor Model Number
1.5	18,000	208/230-1	538TEQ018RCMA
2.25	27,000	208/230-1	538TEQ027RCMA
3	36,000	208/230-1	538TEQ036RCMA
4	48,000	208/230-1	538TEQ048RCMA

Model number Nomenclature

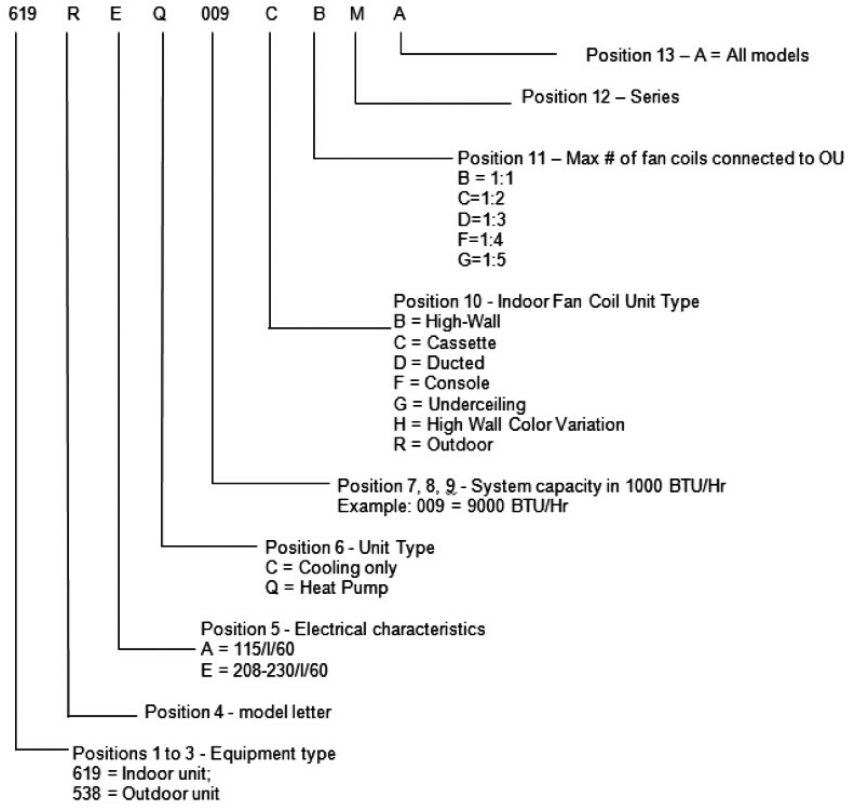

⚠ CAUTION

- Contact an authorized service technician for repair or maintenance of this unit.
- Contact the installer for installation of this unit.
- The air conditioner is not intended for use by young children or invalids without supervision.
- Young children should be supervised to ensure that they do not play with the air conditioner.
- If the power cord is to be replaced, replacement work shall be performed by authorized personnel only.
- Installation work must be performed in accordance with the national wiring standards by authorized personnel only.

ENVIRONMENTAL NOTICE

When using this air conditioner in the European countries, the follow information must be followed:

DISPOSAL: Do not dispose this product as unsorted municipal waste. Collection of such waste separately for special treatment is necessary.

It is prohibited to dispose of this appliance in domestic household waste.
For disposal, there are several possibilities:

A) The municipality has established collection systems, where electronic waste can be disposed of
B) When buying a new product, the retailer will take back the old product free of charge.
C) The manufacturer will take back the old appliance for disposal.
D) As old products contain valuable resources, they can be sold to scrap metal dealers.

Wild disposal of waste in forests and landscapes endangers your health when hazardous substances leak into the ground-water and find their way into the food chain.

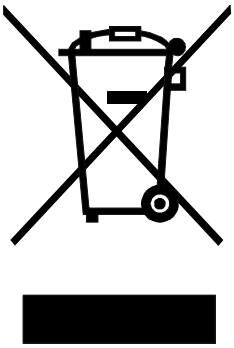

To prevent injury to the user or other people and property damage, the following instructions must be followed. Incorrect operation due to ignoring of instructions may cause harm or damage.

- The seriousness is classified by the following indications.

⚠ WARNING	This symbol indicates the possibility of death or serious injury.
⚠ CAUTION	This symbol indicates the possibility of injury or damage to property.

- Meanings of symbols used in this manual are as shown below.

⃠	**Never do this.**
ⓘ	**Always do this.**

⚠ WARNING

ⓘ Connect with the power properly.
- Otherwise, it may cause electric shock or fire due to excess heat generation.

⃠ Do not operate or stop the unit by switching on or off the power.
- It may cause electric shock or fire due to heat generation.

⃠ Do not damage or use an unspecified power cord.
- It may cause electric shock or fire.

⃠ Do not modify power cord length or share the outlet with other appliances
- It may cause electric shock or fire due to heat generation.

⃠ Do not operate with wet hands or in damp environment.
- It may cause electric shock.

⃠ Do not direct airflow at room occupants only.
- This could damage your health.

ⓘ Always ensure effective grounding.
- No grounding may cause electric shock.

⃠ Do not allow water to run into electric parts.
- It may cause machine failure or electric shock.

ⓘ Always install circuit breaker and a dedicated power circuit.
- Failure to install may cause fire and electric shock.

ⓘ Disconnect the power if strange sounds, smell, or smoke comes from it.
- It may cause fire and electric shock.

⃠ Do not drink water drained from air conditioner.
- It contains contaminants and could make you sick.

⃠ Do not open the unit during operation.
- It may cause electric shock.

ⓘ Use the correctly rated breaker or fuse.
- Otherwise risk of fire or electric shock.

⃠ Do not use the power cord close to heating appliances.
- It may cause fire and electric shock.

⃠ Do not use the power cord near flammable gas or combustibles, such as gasoline, benzene, thinner, etc.
- It may cause an explosion or fire.

ⓘ Ventilate room before operating air conditioner if there is a gas leakage from another appliance.
- It may cause explosion, fire and, burns.

⃠ Do not disassemble or modify unit.
- Doing so may result in unit failure and electric shock.

⚠ CAUTION

⊘ When the air filter is to be removed, do not touch the metal parts of the unit.

- Doingsomay cause an injury.

⊘ Do not clean the air conditioner with water.

- Water may enter the unit and degrade the insulation. It may cause an electric shock.

ⓘ Ventilate the room well when used together with a stove, etc.

- An oxygen shortage may occur.

ⓘ When the unit is to be cleaned, switch off, and turn off the circuit breaker.

- Do not clean unit when power is on as it may cause fir,electric shock, or it may cause an injury.

⊘ Do not put a pet or house plant where it will be exposed to direct air flow.

- This could injure the pet or plant.

⊘ Do not use for special purposes.

- Do not use this air cond-itioner to preserve preci-sion devices, food, pets, plants, and art objects. It may cause deterioration of quality, etc.

ⓘ Stop operation and close the window in storm or hurricane.

- Operation with windows opened may allow water to enter the interior space and soak or damage interior items.

⊘ Do not place obstacles around air-inlets or inside of air-outlet.

- It may cause failure of teh appliance or accident.

ⓘ Turn off the main power switch when not using the unit for a long time.

- It may cause failure of product or fire.

⊘ Do not use strong detergent such as wax or thinner. Use a soft cloth for cleaning.

- Appearance may be deteriorated due to change of product color or scratching of its surface.

ⓘ Ensure that the installation bracket of the outdoor appliance is not damaged due to prolonged exposure.

- If bracket is damaged, there is risk of damage due to falling of unit.

ⓘ Always insert the filters securely. Clean filter once every two weeks.

- Operation without filters may cause failure.

⊘ Do not place heavy object on the power cord and take care so that the cord is not compressed.

- Do not operate your air conditioner in a wet room such as a bathroom or laundry room.

ⓘ Use caution when unpacking and installing. Sharp edges could cause injury.

- Children should be supervised to ensure they do not play with the appliance.

ⓘ If water enters the unit, turn the unit off and disconnect the power , contact a qualified service technician.

- There is danger of fire or electric shock.

⊘ This appliance can be used by children aged from 8 years and above and persons with reduced physical, sensory or mental capabilities or lack of experience and knowledge if they have been given supervision or instruction concerning use of the appliance in a safe way and understand the hazards involved. Children shall not play with the appliance. Cleaning and user maintenance shall not be performed by children without supervision.

ⓘ This appliance is not intended for use by persons (including children) with reduced physical, sensory or mental capabilities, or lack of experience and knowledge, unless they have been given supervision or instruction concerning use of the appliance by a person responsible for their safety.

ⓘ If the supply cord is damaged, it must be replaced by the manufacturer, its service agent or similarly qualified persons in order to avoid a hazard.

OPERATING INSTRUCTIONS

Identification of parts

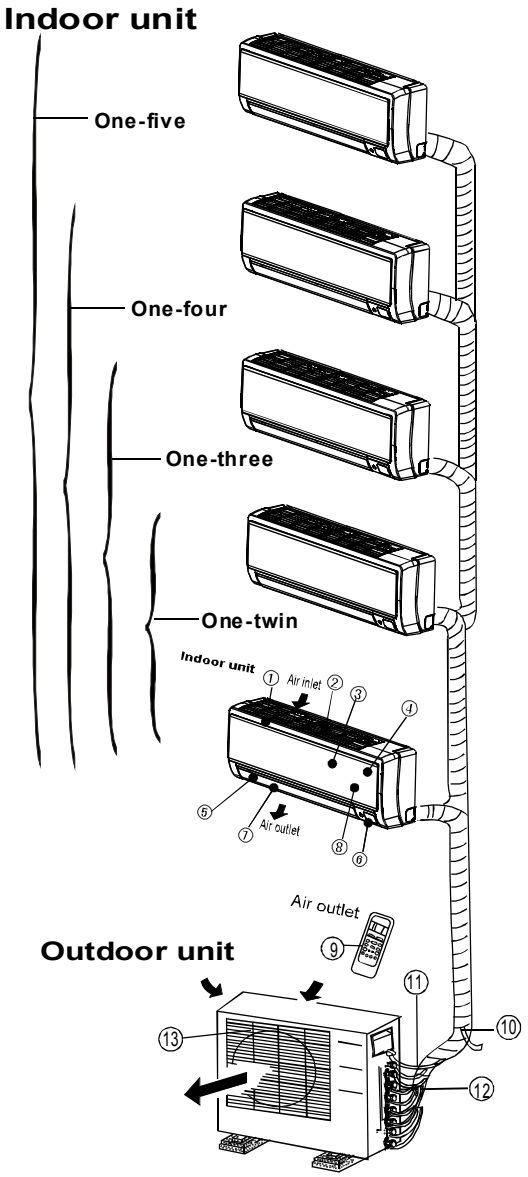

Indoor unit

1. Panel frame
2. Rear air intake grille
3. Front panel
4. Air Purifying filter and Air filter(behind)
5. Horizontal louver
6. LCD display window
7. Vertical louver
8. Manual control button(behind)
9. Remote controller holder

Outdoor unit

10. Drain hose, refrigerant connecting pipe
11. Connective cable
12. Stop valve
13. Fan hood

Display window

NOTE: The display window on the air conditioner you purchased may look like one of the following:

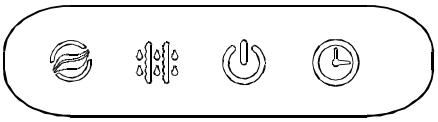

（A）

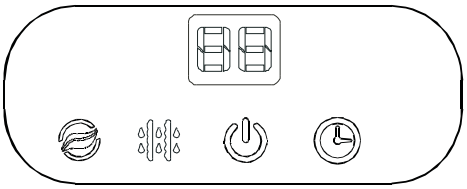

（B）

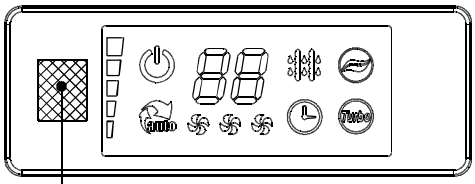

(2)

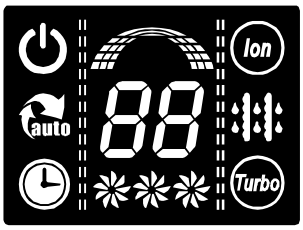

(3)

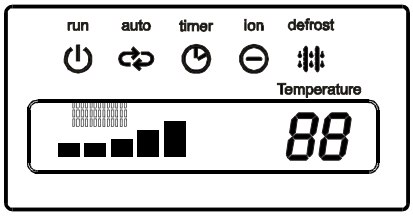

(4)

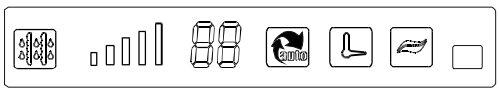

(5)

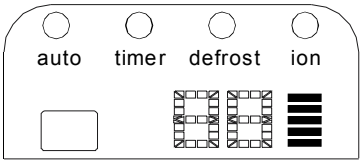

(6)

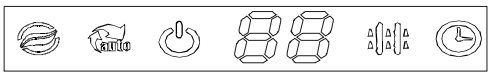

(7)

OPERATION display
Displays when the air conditioner is in operation.

AUTO operation display
Displayed during the Auto operation.

DEFROST operation display
(For Heating and Cooling model only):
Displays when the air conditioner starts defrosting automatically or when the warm air control feature is activated in the heating operation.

TIMER display
Displays during the Timer operation.

CLEAN AIR display(optional)
Displays when the CLEAN AIR feature is activated.

TURBO operation display
Displays when a user selectstheTURBO function on the cooling operation or on the heating operation.

DIGITAL DISPLAY
Displays the current setting temperature when the air conditioner is in operation.

FAN SPEED display
Displays the selected fan speed: LOW(), MED( ) and HIGH( ).

Frequency indication lamp
This display is separated into five zones. The zones illuminate based on the compressor current frequency. For example, higher frequency illuminates more zones.

OPERATING INSTRUCTIONS

Identification of parts

Floor Console
Indoor unit

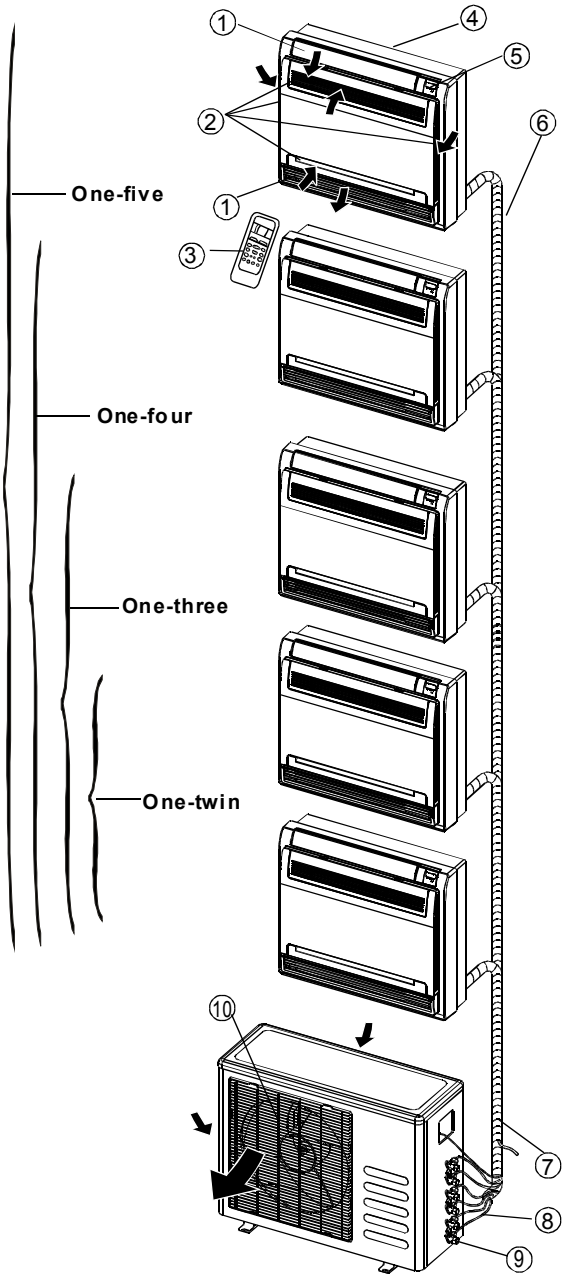

Indoor unit

1. Air flow louver (at air outlet)
2. Air inlet(with air filter installed)
3. Remote controller
4. Installation part
5. Display panel
6. Connecting pipe

Outdoor unit

7. Drain hose, refrigerant connecting pipe
8. Connective cable
9. Stop valve
10. Fan hood

DISPLAY PANEL:

① **OPERATION indication lamp**
This indicator illuminates when the unit is operational.

② **TIMER indication lamp**
Lights up during the Timer operation.

③ **DEFROST indication lamp**(Cooling and Heating models only) **or Fan only indication lamp** (Cooling only type):
Lights up when the air conditioner starts defrosting automatically in the heating operation or if the fan only mode is selected.

④ **Temporary button**
This button is used to operate the unit temporarily in case you misplace the remote controller or its batteries are exhausted. One press of the manual control button leads to the forced AUTO operation. If you press the button twice within five seconds, the unit will operate under the forced COOL operation. The forced COOL operation is used for testing purposes only, please do not choose it unless it is necessary.

Display panel

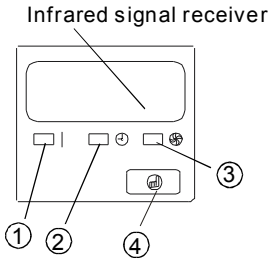

OPERATING INSTRUCTIONS

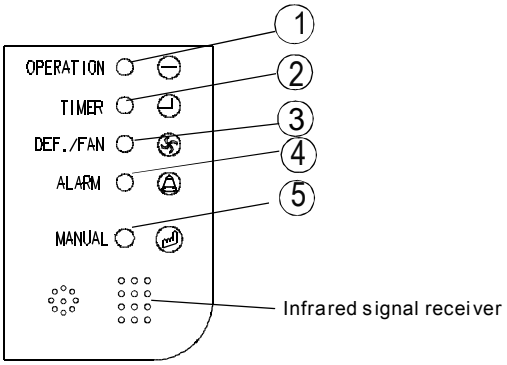

(2)

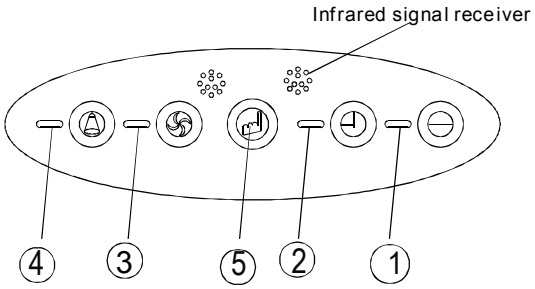

(3)

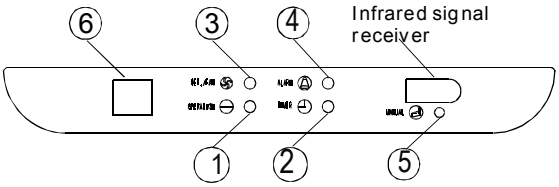

(4)

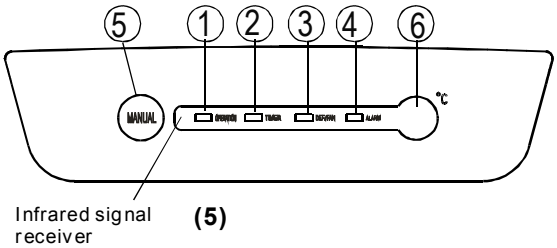

(5)

⑤ **Temporary button**
This button is used to operate the unit temporarily in case you misplace the remote controller or its batteries are exhausted. One press of the manual control button will lead to the forced AUTO operation. If you press the button twice within five seconds, the unit will operate under the forced COOL operation. The forced COOL operation is used for testing purposes only, please do not choose it unless it is necessary.

⑥ **Temperature Display**
Displays the current setting temperature while the unit is operating.

Identification of parts

Duct / Ceiling type

Indoor unit

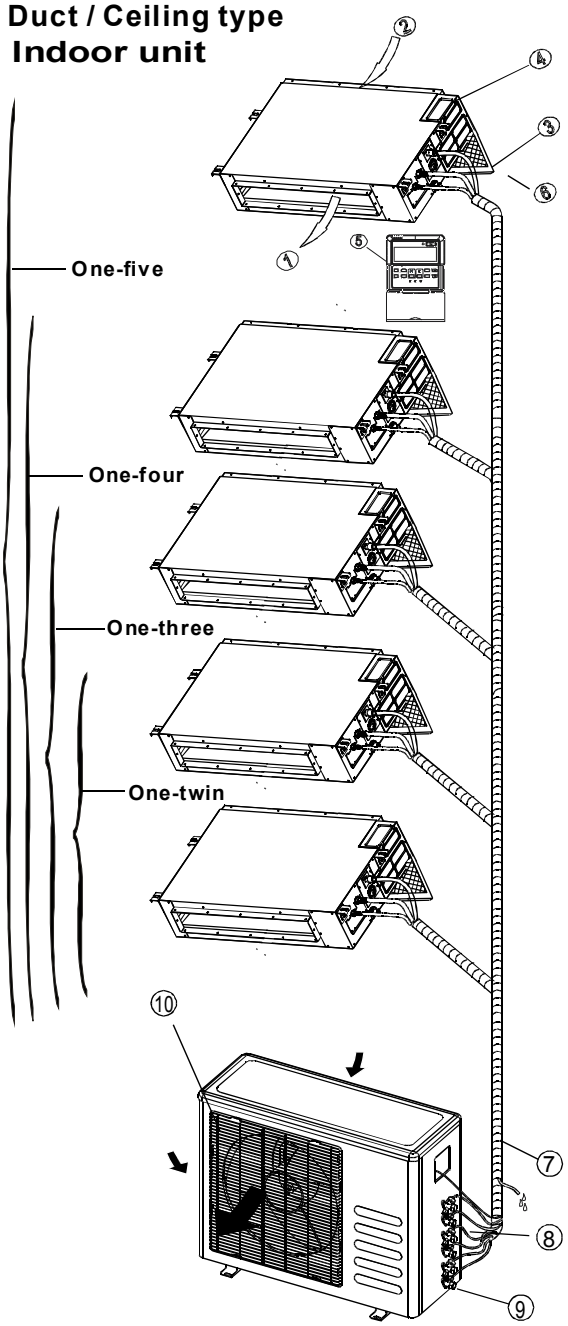

Indoor unit

1. Air outlet
2. Air inlet
3. Air filter
4. Electric control cabinet
5. Wire controller
6. Drain pipe

Outdoor unit

7. Drain hose, refrigerant connecting pipe
8. Connective cable
9. Stop valve
10. Fan hood

Display panel

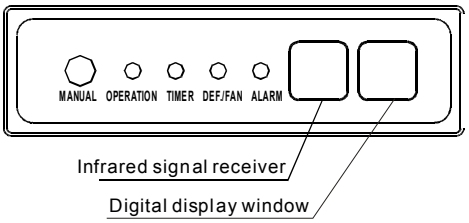

DISPLAY PANEL:

① **OPERATION indication lamp**
This indicator illuminates when the unit is operational.

② **TIMER indication lamp**
Lights up during the Timer operation.

③ **DEF./FAN indication lamp**
Lights up when the air conditioner starts defrosting automatically in the heating operation (applicable to cooling and heating models only) or the fan only mode is selected(applicable to cooling only models).

④ **ALARM indication lamp**
Flashes when a malfunction occurs.

⑤ **MANUAL button**
This button is used to operate the unit temporarily in case you misplace the remote controller or its batteries are exhausted. One press of the manual control button will lead to the forced AUTO operation. If you press the button twice within five seconds, the unit will operate under the forced COOL operation. The forced COOL operation is used for testing purposes only, please do not choose it unless it is necessary.

Identification of parts

Compact four-way cassette type

Indoor unit

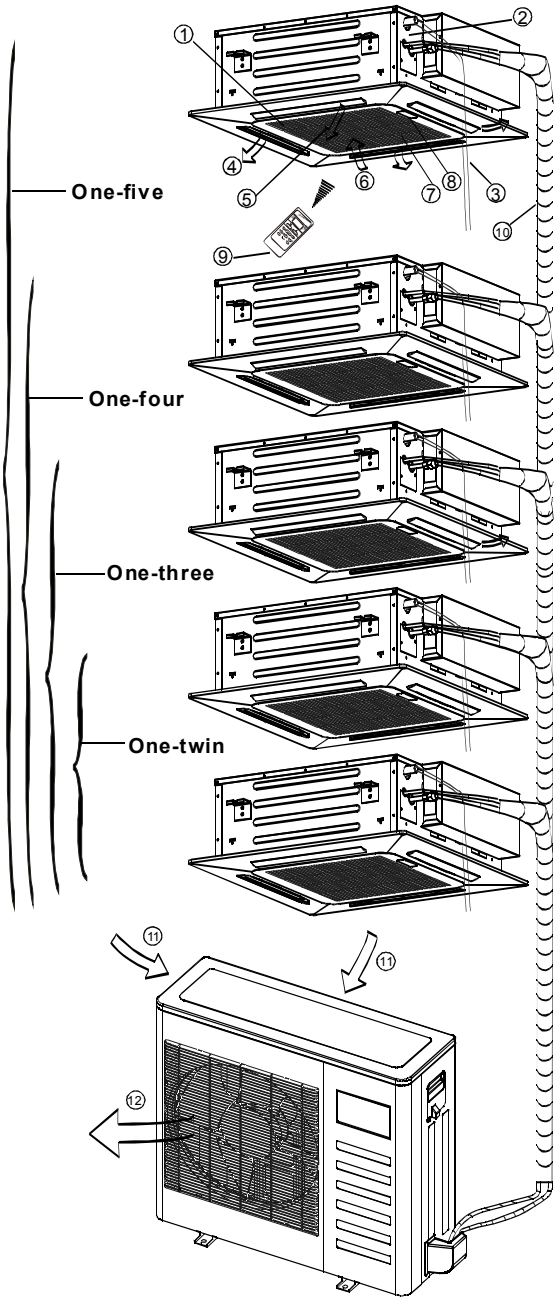

Display panel

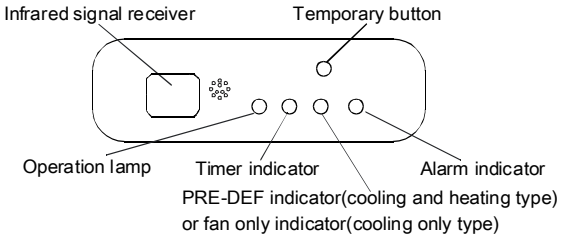

Indoor unit

1. Air flow louver(at air outlet)
2. Drain pump(drain water from indoor unit)
3. Drain pipe
4. Air outlet
5. Air filter(inside air-in grill)
6. Air inlet
7. Air-in grill
8. Display panel
9. Remote controller
10. Refrigerant pipe

Outdoor unit

11. Air inlet
12. Air outlet

DISPLAY PANEL:

① **OPERATION lamp**
This indicator illuminates when the unit is operational.

② **TIMER indication lamp**
Lights up during the Timer operation.

③ **PRE-DEF./FAN indication lamp**
Lights up when the air conditioner starts defrosting automatically in the heating operation (applicable to cooling and heating models only) or if the fan only mode is selected(applicable to cooling only models).

④ **ALARM indication lamp**
Flashes when a malfunction occurs.

⑤ **TEMPORARY button**
This button is used to operate the unit temporarily in case you misplace the remote controller or its batteries are exhausted. One press of the manual control button will lead to the forced AUTO operation. If you press the button twice within five seconds, the unit will operate under the forced COOL operation The forced COOL operation is used for testing purposes only, please do not choose it unless it is necessary.

NOTE: This manual does not include Remote Controller Operations, see the <<Remote Controller Instruction>> packed with the unit for details.

Operating temperature

Mode / Temperature	Cooling operation	Heating operation	Drying operation
Room temperature	62°F~90°F (17°C~32°C)	32°F~86°F(0°C~30°C)	62°F~90°F(17°C~32°C)
Outdoor temperature	32°F~122°F (0°C~50°C)	5°F~76°F (-15°C~24°C)	32°F~122°F (0°C~50°C)
	5°F~122°F (-15°C~50°C) For the models with low temperature cooling system)		

NOTE:

1. Optimum performance is achieved within these operating temperatures. If the air conditioner is used outside of the above conditions, certain safety protection features might come into operation and cause the unit to function abnormally.
2. If the air conditioner operates in a room whose relative humidity is less than 80% the surface of the air conditioner may attract condensation. Please set the vertical air flow louver to its maximum angle (vertically to the floor), and set to the HIGH fan mode.

Suggestion: Because the unit uses an electric heater, when the outside ambient temperature is below 32°F(0°C), we strongly recommend that you keep the machine plugged in to help the unit run smoothly.

Manual operation

Manual operation can be used temporarily in case you can not find the remote controller or test running purpose or maintenance necessary.

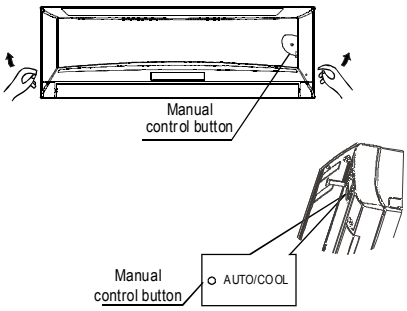

Model A

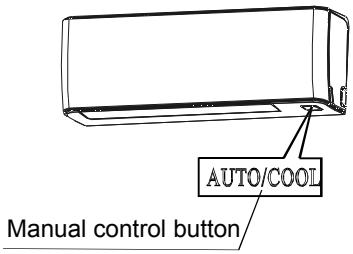

Model B

NOTE: The unit must be turned off before operating the manual control button. If the unit is operational, continue pressing the manual control button until the unit is off.

① Open and lift the front panel up to see the manual control button(see Model A)
For some models, the manual control button is located at the bottom of the unit(see Model B).

② One press of the manual control button will lead to the forced AUTO operation. If you press the button twice within five seconds, the unit will operate under the forced COOL operation.

③ Close the panel firmly to its original position.

NOTE: For DUCT and CEILING type, CASSETTE type, CEILING and FLOOR type and FLOOR and STANDING type, please refer to the previous pages for information on the use of the Manual button.

Airflow direction control

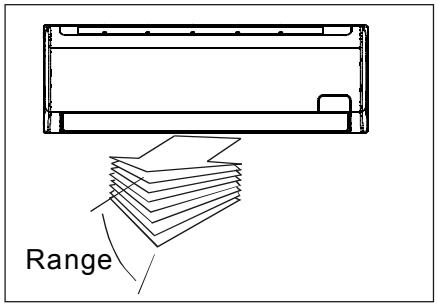

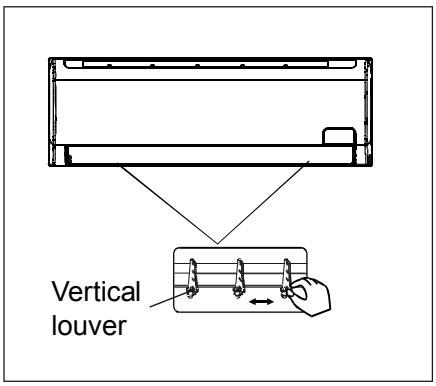

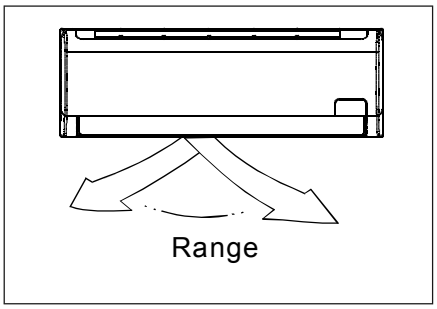

- Adjust the air flow direction properly otherwise it might cause discomfort or cause uneven room temperatures.
- Adjust the horizontal/vertical louver using the remote controller. For some models, the vertical louver can only be adjusted manually.

To set the horizontal/vertical air flow direction

- Perform this function while the unit is in operation.
- Use the remote controller to adjust the air flow direction. The vertical/horizontal louver adjusts 6 degrees in angle for each press.
  Please refer to the ‘‘REMOTE CONTROLLER OPERATION MANUAL’’ for details.
- For some models, the vertical louver can only be adjusted manually. Move the deflector rod manually to adjust the air flow in the direction you prefer.
  IMPORTANT:Do not put your fingers into the panel of blower and suction side.The high-speed fan may cause injury.

⚠ CAUTION

- Do not operate the air conditioner for long periods with the air flow direction set downward in the cooling or dehumidifying mode. Otherwise, condensation may accumulate on the surface of the horizontal louver causing moisture to drop on to the floor or on furnishings.
- Do not move the horizontal louver manually unless it is necessary. Always use the remote controller.
- When the air conditioner is started immediately after it was stopped, the horizontal louver might not move for approximately 10 seconds.
- Open angle of the horizontal louver should not be set too low as COOLING or HEATING performance may be impaired due to a highly restricted air flow area
- Do not operate unit with the horizontal louver in theclosed position.
- When the air conditioner is connected to power (initial power), the horizontal louver may generate a sound for 10 seconds, this is a normal.

Duct-Ceiling Type

The following information details how to adjust the air flow direction when the air outlet parts (sold separately) is used with the indoor unit.

Cooling
To effectively cool the whole room, please adjust the louver horizontally.

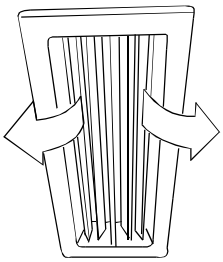

Heating
To effectively heat the bottom of the room please set the louver downwards.

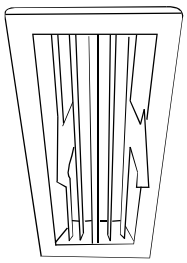

How the air conditioner works

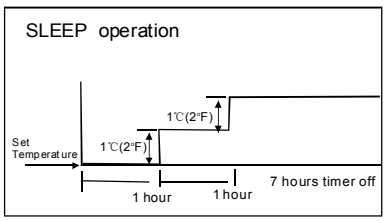

Cooling

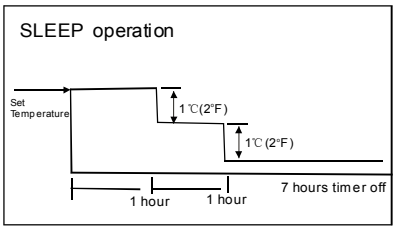

Heating

AUTO operation

- When you set the air conditioner to the AUTO mode, it will automatically select cooling, heating(cooling /heating models only), or fan only operation depending on what temperature you have selected and the room temperature.
- The air conditioner controls room temperature automatically round the temperature point set by you.
- If the AUTO mode is uncomfortable, you can select desired conditions manually.

SLEEP operation

- When you push SLEEP button on the remote controller during cooling, heating(cooling only type without), or AUTO operation , the air conditioner will automatically increase (cooling) or decrease (heating) 2°F(1℃) per hour.
- The set temperature should be stable within two hours. And the air conditioner will turn off in 7 hours.
- The fan speed will be automatically controlled.
- This feature can maintain the most comfortable temperature and reduce energy costs.

DRYING operation

- The fan speed will be automatically controlled under the dry operation.
- During the the dry operation, if the room temperature is lower than 50°F(10°C), the compressor stops operating and restarts until the room temperature is above 54°F(12°C).

Operation mode selection

While simultaneously operating two indoor units or more, make sure the operation modes will not conflict with each other. The heat mode claims precedence over all other modes. If the unit intially started operates under the heat mode, the other units may only operate under heat mode. For example: If the unit intially started operates under cool(or fan) mode, the other units can operate under any mode except heat. If one of the units select heat mode, the other operating units will stop operation and display " -- " (For the units with the display window only) or the Auto and Operation indication light will flash rapidly, the Defrost indication light turns off, the Timer indication light remains on(for the units without a display window), or the Defrost and Alarm indication light(if applicable) illuminate, the Operation indication light flashes rapidly and the Timer indication light turns off (for the floor and standing type).

Optimal operation

To achieve optimal performance, please note the following:

- Adjust the air flow direction correctly so that it is not directed toward people.
- Adjust the temperature to achieve the highest comfort level. Do not adjust the unit to excessive temperature levels.
- Close doors and windows when the unit is operating on COOL or HEAT modes, or the performance may be reduced.
- Use the TIMER ON button on the remote controller to select a time you want to start your air conditioner.
- Do not put any object near the air inlet or air outlet, as the efficiency of the air conditioner may be reduced and the air conditioner may stop running.
- Clean the air filter periodically, otherwise cooling or heating performance may be reduced.
- Do not operate unit with horizontal louvre in the closed position.

Suggestion: Because the unit uses an electric heater, when the outside ambient temperature is below 32°F(0°C),we strongly recommend that you keep the machine plugged in to help the unit run smoothly.

Care and maintenance

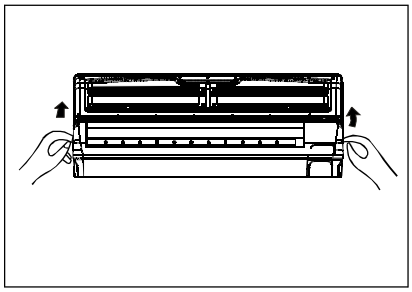

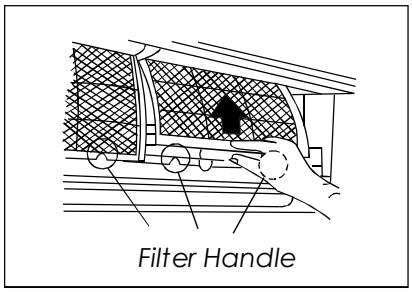

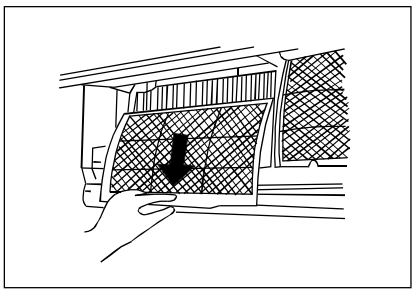

Cleaning the Grille, Case and Remote Controller

- Turn the system off before cleaning. To clean, wipe with a soft, dry cloth. Do not use bleach or abrasives.

NOTE: Supply power must be disconnectd before cleaning the indoor unit.

⚠ CAUTIONS

- A cloth dampened with cold water may be used on the indoor unit if it is very dirty. Then wipe it with a dry cloth.
- Do not use a chemically treated cloth or duster to clean the unit.
- Do not use benzine, thinner, polishing powder, or similar solvents for cleaning. These may cause the plastic surface to crack or deform.
- Never use water hotter than 104 ℉(40 ℃) to clean the front panel, it could cause deformation of discoloration.

■ WALL-MOUNTED TYPE

Cleaning the air filter

A clogged air filter reduces the cooling efficiency of this unit. Please clean the filter once every 2 weeks.

1. Lift the indoor unit panel up to an angle until it stops with a clicking sound.
2. Take hold of the handle of the air filter and lift it up slightly to take it out from the filter holder, then pull it downwards.
3. Remove the **Active Carbon & Dust Filter** from the indoor unit.
   - Clean the filter once every two weeks.
   - Clean the filter with a vacuum cleaner or water, then dry it up in cool place.

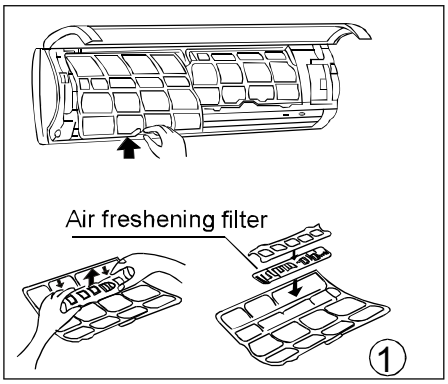

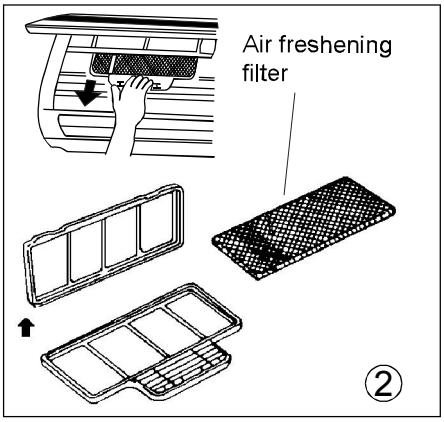

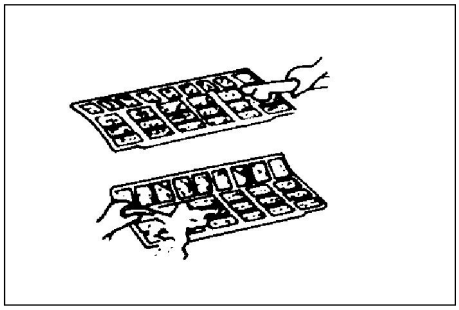

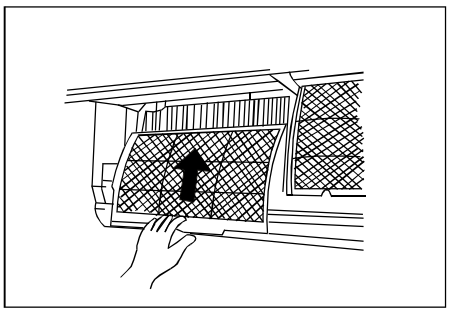

4. Remove the **Air Freshening Filter**(**Optional filter**: Plasma Dust collector/Silver Ion filter /Bio filter / Vitamin C filter) from its support frame.
   (The installation and removing method of the air freshening filter is different depending on the models, (see the images marked ① and ② on the left).
   - Clean the air freshening filter at least once a month, and replace it every 4-5 months.
   - Clean it with a vacuum cleaner, then dry it in cool place.
5. Install the air freshening filter back into position.
6. Insert the upper portion of air filter back into the unit taking care that the left and right edges line up correctly and place the filter into position.

Maintenance

If you plan to idle the unit for a long time, perform the following:
(1) Operate the fan for about half a day to dry the inside of the unit.
(2) Stop the air conditioner and disconnect the power. Remove the batteries from the remote controller.
(3) The outdoor unit requires periodic maintenance and cleaning. Do not attempt this yourself. Contact your dealer or servicer.

Checks before operation

- Check that the wiring is not broken or disconnected.
- Check that the air filter is installed.
- Check if the air outlet or inlet is blocked after the air conditioner has not been used for a long time.

⚠ Caution

- Do not touch the metal parts of the unit when removing the filter. Injuries can occur when handling sharp metal edges.
- Do not use water to clean inside the air conditioner. Exposure to water can destroy the insulation, leading to possible electric shock.
- When cleaning the unit, first make sure that the power and circuit breaker are turned off.

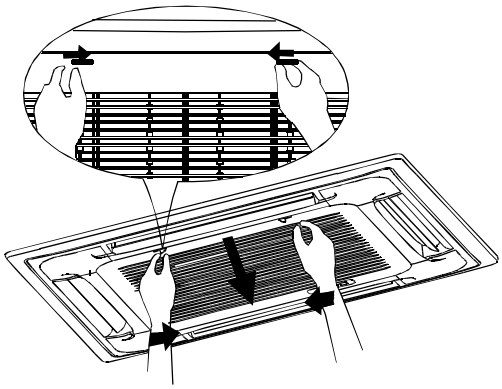

Fig. A

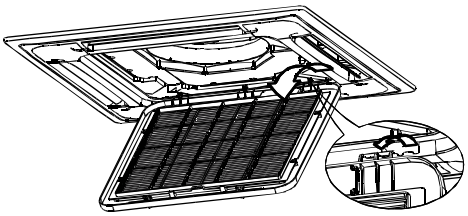

Fig.B

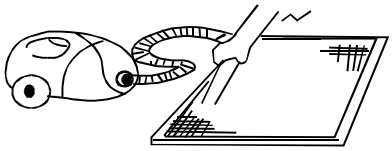

Fig. C

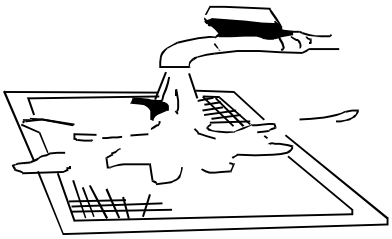

Fig. D

■ CASSETTE TYPE

1. Open the air-in grill
   Push the grill switches towards the middle simultaneously as indicated in Fig. A. Then pull down the air-in grill.
   Cautions: The control box cables ,which are originally connected with the main body electrical terminators must be pulled off before doing as indicated above.
2. Take out the air-in grill (together with the air filter shown in Fig. B). Pull the air-in grill down at 45 °and lift it up to take out the grill.
3. Dismantle the air filter.
4. Clean the air filter(vacuum cleaner or pure water may be used to clean the air filter. If the dust accumulation is too heavy , please use a soft brush and mild detergent to clean it and dry out in cool place) .

■ DUCT AND CEILING TYPE

1. Open the air-in grill.
   Push the grill switches towards the middle simultaneously as indicated in following figure sketch. Then pull down the air-in grill.
   Cautions: The control box cables ,which are originally connected with the main body electrical terminators, must be pulled off before performing the previous step.
2. Take out the air-in grill.
3. Dismantle the air filter.
4. Clean the air filter (vacuum cleaner or pure water may be used to clean the air filter. If the dust accumulation is too heavy , please use a soft brush and mild detergent to clean it and dry out in cool place) .
   - The air-in side should face up when using vacuum cleaner. (See Fig. C)
   - The air-in side should face down when using water. (See Fig. D)
   Cautions : Do not dry out the air filter under direct sunshine or with fire.
5. Re-install the air filter
6. Install and close the air-in grill in the reverse order of step 1 and 2 and connect the control box cables to the corresponding terminators of the main body .
   Note: The High-static Pressure Parvis Split Type has no air filter.

■ FLOOR AND STANDING TYPE(Console)

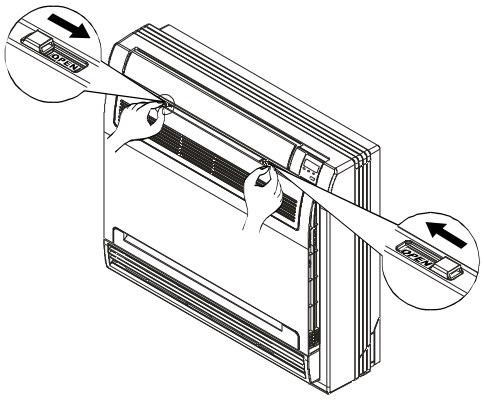

Fig.F1

1. Open the front panel.(Refer to Fig. F1)

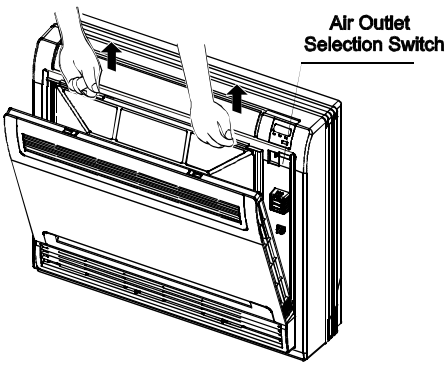

Fig.F2

2. Remove the air filter

Press the claws on the right and left of the air filter down slightly, then pull upward.(Refer to Fig.F2)

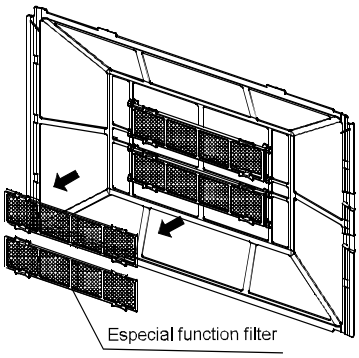

Fig.F3

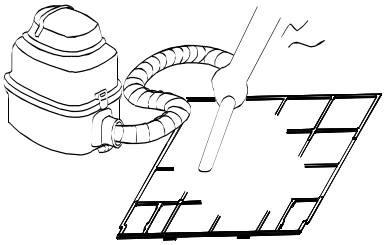

Fig.F4

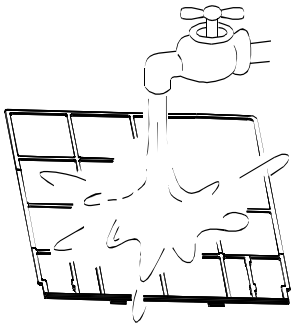

Fig.F5

3. Take off the special function filter

Hold the tabs of the frame, and remove the claws in 4 places. (Refer to Fig. F3)

(The special function filter can be cleaned by washing it with water once every 6 months. We recommend replacing it once every 3 years.)

4. Clean the air filter

A vacuum cleaner or pure water may be used to clean the air filter. If the dust accumulation is too heavy, please use a soft brush and mild detergent to clean it and dry out in cool place.

The air-in side should face up when using a vacuum cleaner.(see Fig.F4)

The air-in side should face down when using water (see Fig. F5).

5. Set the air filter and the special function filter as they were and close the front panel.

Operation without air filters may result in a malfunction as dust will accumulate inside the indoor unit.

⚠ **CAUTION:**

Do not dry the air filter by heat or under the direct sunlight.

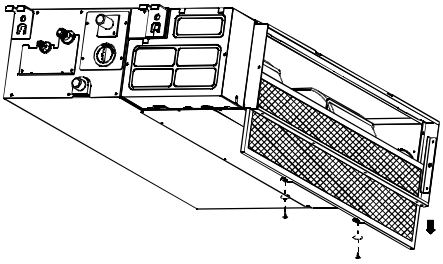

Fig.G1

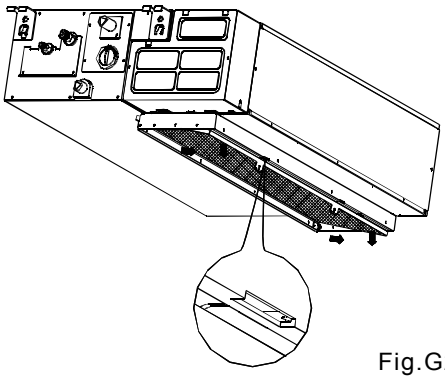

Fig.G2

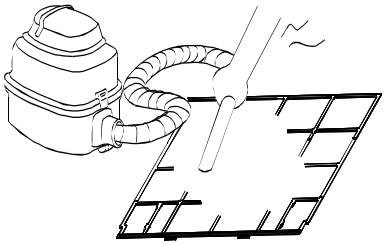

Fig.G3

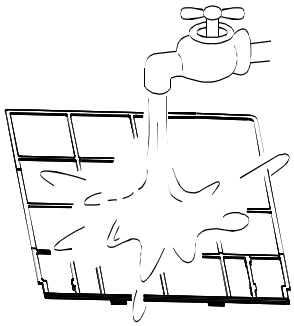

Fig.G4

■ DUCT /CEILING TYPE

1. Because the unit is a rear ventilated model, please remove the screws (2 pieces) fixed on the filter and pull the filter down away from the unit. See Fig.G1.

2. Because the unit is a descensional ventilated model, please push the filter up slightly for the position retainer to be removed from the flange fixed holes, and take off the filter according to the arrow direction shows in the Fig.G2.

3. Clean the air filter. A vacuum cleaner or pure water may be used to clean the air filter. If the dust accumulation is too heavy, please use a soft brush and mild detergent to clean it and dry out in cool place.

4. The air-in side should face up when using the vacuum cleaner.(see Fig.G3)
   The air-in side should face down when using water (see Fig. G4).

OPERATION TIPS

Maintenance

If you plan to idle the unit for a long time, perform the following:

1. Clean the indoor unit and air filter.
2. Select the FAN only mode, let the indoor fan run for a while to dry the inside of the unit.
3. Disconnect the power supply and remove the battery from the remote control.
4. Check components of the outdoor unit periodically. Contact a local dealer or a customer service center if the unit requires servicing.

Note: Before you clean the air conditioner, be sure to switch the unit off and disconnect the power supply plug.

When the air conditioner is to be used again:

- Use a dry cloth to wipe off the dust accumulated on the rear air intake grille, in order to avoid the dust blowing out from the indoor unit.
- Check that the wiring is not broken off or disconnected.
- Check that the air filter is installed.
- Check if the air outlet or inlet is blocked after the air conditioner has not been used for a long time.

Operation Tips

The following events may occur during normal operation.

1. **Protection of the air conditioner.**

   Compressor protection

   - The compressor can't restart for 3 minutes after it stops.

   Anti-cold air (Cooling and heating models only)

   - The unit is designed not to blow cold air on HEAT mode, when the indoor heat exchanger is in one of the following three situations and the set temperature has not yet been reached.
     A) When heating has just starting.
     B) Defrosting.
     C) Low temperature heating.
   - The indoor or outdoor fan stop running when defrosting (cooling and heating models only).

   Defrosting (cooling and heating models only)

   - Frost may be generated on the outdoor unit during a heat cycle when the outdoor temperature is low and humidity is high resulting in laower heating efficiency of the air conditioner.
   - During this condition the air conditioner will stop the heating operation and start defrosting automatically.
   - The time to defrost may vary from 4 to 10 minutes according to the outdoor temperature and the amount of frost buildup on the outdoor unit.

2. **A white mist out of the indoor unit**
   - A white mist may generate due to a large temperature difference between the air inlet and the air outlet on the COOL mode in an indoor environment that has a high relative humidity.
   - A white mist may generate due to moisture generated from the defrosting process when the air conditioner restarts in the HEAT mode operation after defrosting.

3. **Low noise of the air conditioner**
   - You may hear a low hissing sound when the compressor is running or has just stopped running. This sound is the result of the refrigerant flowing or coming to a stop
   - You can also hear a low "squeak" sound when the compressor is running or has just stopped running. This is caused by heat expansion and cold contraction of the plastic parts in the unit when the temperature is changing.
   - A noise may be heard due to a louver restoring to its original position when the power is first turned on.

4. **Dust is blown out from the indoor unit.**
   This is a normal condition when the air conditioner has not been used for a long time or during first use of the unit.

5. **A peculiar smell comes out of the indoor unit.**
   This is caused by the indoor unit emitting odors extractedfrom building material, furniture, or smoke.

6. **The air conditioner turns to the FAN only mode from COOL or HEAT (for cooling and heating models only) mode.**
   When the indoor temperature reaches the temperature setting on the air conditioner, the compressor stops automatically, and the air conditioner turns to the FAN only mode. The compressor will start again when the indoor temperature rises on the COOL mode or falls on the HEAT mode (for cooling and heating models only) to the set point.

7. Dripping water may accumulate on the surface of the indoor unit when cooling in a high relative humidity (higher than 80%). Adjust the horizontal louver to the maximum air outlet position and select the HIGH fan speed.

8. **Heating mode (for cooling and heating models only)**
   The air conditioner draws in heat from the outdoor unit and releases it through the indoor unit during the heating operation. When the outdoor temperature falls, heat drawn in by the air conditioner decreases accordingly.
   At the same time, heat loading of the air conditioner increases due to the larger difference between the indoor and outdoor temperature. If a comfortable temperature can't be achieved by the air conditioner, we suggest you use a supplementary heating device.

9. **Auto-restart function**
   Power failure during operation will stop the unit completely.
   For the unit without the Auto-restart feature, when the power restores, the OPERATION indicator on the indoor unit starts flashing. To restart the operation, push the ON/OFF button on the remote controller. For the unit with the Auto-restart feature, when the power restores, the unit restarts automatically with all the previous settings preserved by the memory function.

10. Lightning or a mobile telephone operating nearby may cause the unit to malfunction.
    Disconnect the unit's power source and then re-connect the unit to the power again.
    Push the ON/OFF button on the remote controller to restart operation.

TROUBLESHOOTING TIPS

Stop the air conditioner immediately if one of the following faults occur. Disconnect the power and contact the nearest customer service center.	
Trouble	If the E(0,1.....) or P(0, 1 .....) code appears on the LED(LCD)window, disconnect the power and contact a service technician.
	Fuse blows frequently or the circuit breaker trips frequently.
	Other objects or water penetrate the air conditioner.
	The remote controller won't work or works abnormally.
	Other abnormal situations.

Malfunctions	Cause	What should be done?
Unit does not start	Power cut	Wait for power to be restored.
	Unit may have become unplugged.	Check that the plug is securely in the wall receptacle.
	Fuse may have blown.	Replace the fuse.
	Battery in remote controller may have been exhausted.	Replace the battery.
	The time you have set with timer is incorrect.	Wait or cancel timer setting.
Unit not cooling or heating (cooling/ heating models only) room very well while air flowing out from the air conditioner	Inappropriate temperature setting.	Set temperature correctly. For detailed method please refer to the "Remote controller instruction" section.
	Air filter is blocked.	Clean the air filter.
	Doors or windows are open.	Close the doors or windows.
	Air inlet or outlet of indoor or outdoor unit has been blocked.	Clear obstructions away first, then restart the unit.
	Compressor 3 minutes protection has been activated.	Wait.
If the trouble has not been corrected, please contact a local dealer or the nearest customer service center. Be sure to inform them of the detailed malfunctions and unit model.		

Notes: Do not attempt to repair the unit yourself.
Always consult an authorized service provider.

Copyright 2014 CAC/BDP • 7310 W. Morris St. • Indianapolis, IN 46231

Edition Date: 11/14

Catalog No: 538T-619P-619R-01OM

Manufacturer reserves the right to change, at any time, specifications and designs without notice and without obligations.

Replaces: New