# 59SC5B
# Comfort™ 95 Single-Stage, 4-Way Multipoise, Condensing Gas Furnace

Carrier®
Turn to the experts

## Product Data

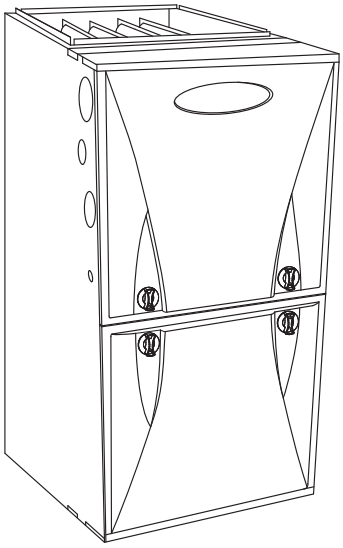

A11263

The 59SC5B Multipoise Comfort™ Condensing Gas Furnace features SEER--boosting year--round electrical efficiency when paired with a compatible condensing unit. Energy efficiency is at the heart of this furnace with up to 96.5% AFUE, gas efficiency and the electrically-efficient fixed-speeds, constant torque (FCT) ECM blower motor. This gas furnace also features 4-way multipoise installation flexibility, and is available in eleven model sizes. All sizes except the 26,000 BTUH model can be vented for direct vent/two-pipe, ventilated combustion air, or single-pipe applications. The 26,000 BTUH model can use the same 2-pipe venting system using outside air for combustion, but is not considered direct-vent. All sizes are design certified in Canada, and select sizes are certified for mobile/manufactured home use with conversion kit accessory.

## PERFORMANCE

- Fixed-speeds, constant torque (FCT) ECM blower motor for electrically efficient operation all year long in heating, cooling and continuous fan operation.
- Single-speed inducer motor, and single-stage gas valve.
- Silicon Nitride PowerHeat™ Hot Surface Igniter.
- Dual fuel capable HybridHeat™ with a compatible heat pump and thermostat for energy-saving heating performance
- Adjustable blower speed for heating and cooling.
- Aluminized-steel primary heat exchanger.
- Stainless-steel condensing secondary heat exchanger.

## INSTALLATION FLEXIBILITY

- 4-way multipoise design for upflow, downflow or horizontal installation, with unique vent elbow for optional venting through-the-cabinet downflow venting capability.
- Factory-configured ready for upflow applications.
- Ideal height 35” (889 mm) cabinet: short enough for taller coils, but still allows enough room for service.
- Two-pipe venting, single-pipe venting or ventilated combustion air.

## APPLICATIONS

- Approved for Twinning applications with accessory kit (060E17--14, 080E17--16, 080E21--20, 100E21--20, 120E24--22, 140E24--22 models, only).
- Approved for Manufactured Housing/Mobile Home applications with MH accessory kit.
- Convertible to propane with gas conversion accessory kit.

## CERTIFICATIONS

- All sizes meet ENERGY STAR® Verizon 4.1 criteria for gas furnaces: 95%+ AFUE.
- Cabinet air leakage less than 2.0% at 1.0 in. W.C. and cabinet air leakage less than 1.4% at 0.5 in. W.C. when tested in accordance with ASHRAE standard 193.
- All sizes can be installed in air quality management districts with a 40 ng/J NOx emissions requirments.

Comfort SERIES

ENERGY STAR

Certified System ISO 9001 Quality

DESIGN CERTIFIED

CERTIFIED

AHRI CERTIFIED www.ahridirectory.org
Use of the AHRI Certified TM Mark indicates a manufacturer's participation in the program For verification of certification for individual products, go to www.ahridirectory.org.

EASE OF INSTALLATION FACTORY AUTHORIZED PARTS ENGINEERED QUALITY

A200351

| FURNACE | CASING DIMENSIONS (IN.) | | | RATED HEATING OUTPUT* BTUH | AFUE | | ENERGY STAR® | HEATING AIRFLOW | | COOLING CFM @ 0.5 ESP (in. W.C.) | MOTOR HP |
|---|---|---|---|---|---|---|---|---|---|---|---|
| | H | D | W | | UPFLOW/ HORIZONTAL | DOWNFLOW | | HEATING CFM† | HEATING ESP (in. W.C.) | | |
| **59SC5B026E14--10** | 35 | 29.50 | 14.20 | 25,000 | 96.0% | 95.0% | YES | 605 | 0.10 | 895 | 1/3 |
| **59SC5B040E14--10** | 35 | 29.50 | 14.20 | 39,000 | 96.0% | 95.0% | YES | 695 | 0.10 | 950 | 1/2 |
| **59SC5B040E17--12** | 35 | 29.50 | 17.50 | 39,000 | 96.5% | 95.0% | YES | 650 | 0.10 | 1010 | 1/2 |
| **59SC5B060E14--12** | 35 | 29.50 | 14.20 | 58,000 | 95.0% | 95.0% | YES | 930 | 0.12 | 1120 | 1/2 |
| **59SC5B060E17--14** | 35 | 29.50 | 17.50 | 58,000 | 96.5% | 95.0% | YES | 1010 | 0.12 | 1330 | 3/4 |
| **59SC5B080E17--16** | 35 | 29.50 | 17.50 | 78,000 | 96.5% | 95.0% | YES | 1325 | 0.12 | 1665 | 3/4 |
| **59SC5B080E21--20** | 35 | 29.50 | 21.00 | 78,000 | 96.5% | 95.0% | YES | 1330 | 0.12 | 1855 | 1 |
| **59SC5B100E21--20** | 35 | 29.50 | 21.00 | 97,000 | 96.3% | 95.0% | YES | 1730 | 0.15 | 2125 | 1 |
| **59SC5B100E21--22** | 35 | 29.50 | 21.00 | 97,000 | 96.3% | 95.0% | YES | 1785 | 0.15 | 2065 | 1 |
| **59SC5B120E24--22** | 35 | 29.50 | 24.00 | 116,000 | 96.1% | 95.0% | YES | 2020 | 0.20 | 2105 | 1 |
| **59SC5B140E24--22** | 35 | 29.50 | 24.00 | 135,000 | 95.0% | 95.0% | YES | 2130 | 0.20 | 2310 | 1 |

*. Capacity in accordance with DOE test procedures. Ratings are position dependent. See rating plate.
†. Heating CFM at factory default blower motor heating tap settings
ESP - External Static Pressure

## FEATURES AND BENEFITS

**HYBRID HEAT® Dual Fuel System** - This system can provide more control over your monthly energy bills by automatically selecting the most economical method of heating. With HYBRID HEAT components, our system automatically switches between the gas furnace and the electric heat pump as outside temperatures change to maintain greater efficiency and comfort than with any traditional single-source heating system. The heat pump also delivers high-efficiency cooling in the summer.

**Power Heat™ Igniter** - Carrier's unique SiN igniter is not only physically robust but it is also electrically robust. It is capable of running at line voltage and does not require complex voltage regulators as do other brands. This unique feature further enhances the gas furnace reliability and continues Carrier's tradition of technology leadership and innovation in providing a reliable and durable product.

**Comfort™ ECM Blower Motor** - This basic ECM, or electronically commutated motor, can provide an efficiency enhancement for select Carrier air conditioner or heat pump systems. It uses less electrical power than its PSC counterpart and has 5 speeds.

**Reliable Heat Exchanger Design** - The aluminized steel, clam shell primary heat exchanger has a crimped, no-weld seam create an efficient, robust design for this essential component.

The condensing heat exchanger, a stainless steel fin and tube design, is positioned in the furnace to extract additional heat. Stainless steel coupling box componentry between heat exchangers has exceptional corrosion resistance in both natural gas and propane applications.

**Media Filter Cabinet** - Enhanced indoor air quality in the home is made easier with our media filter cabinet-accessory (purchased separately). When installed as a part of the system, this cabinet allows for easy and convenient addition of a Carrier high efficiency air filter.

**4-Way Multipoise Design** - One model for all applications – there is no need to stock special downflow or horizontal models when one unit will do it all.

**Direct or Single-pipe Venting, or Optional Ventilated Combustion Air** - All sizes except the 26,000 BTUH model can be vented for direct vent/two-pipe, ventilated combustion air, or single-pipe applications. The 26,000 BTUH model can use the same 2-pipe venting system using outside air for combustion, but is not considered direct-vent.

**Sealed Combustion System** - This furnace brings in combustion air from outside the furnace, which results in especially quiet operation. By sealing the entire combustion vestibule, the entire furnace can be made quieter, not just the burners.

**Insulated Casing** - Foil-faced insulation in the heat exchanger section of the casing minimizes heat loss.

**Monoport Burners** - The burners are specially designed and finely tuned for smooth, quiet combustion and economical operation.

**Bottom Closure** - Factory-installed for side return; easily removable for bottom return. The multi-use bottom closure can also serve for roll-out protection in horizontal applications, and act as the bottom closure for the optional return air base accessory.

**Blower Access Panel Switch** - Automatically shuts off 115-v power to furnace whenever blower access panel is opened.

**Quality Registration** - Our furnaces are engineered and manufactured under a quality management system registered to ISO 9001.

**Manufacturer reserves the right to change, at any time, specifications and designs without notice and without obligations.**

# MODEL NUMBER NOMENCLATURE

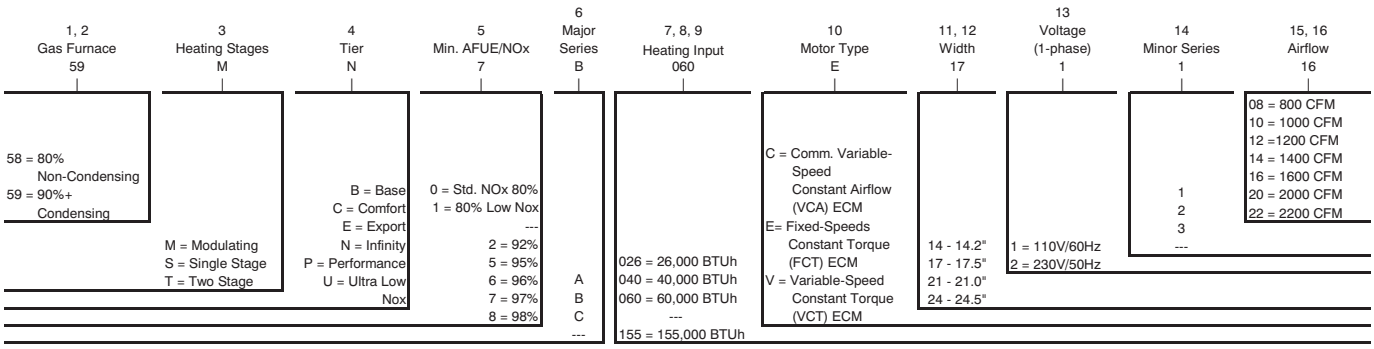


A200524

# FURNACE COMPONENTS

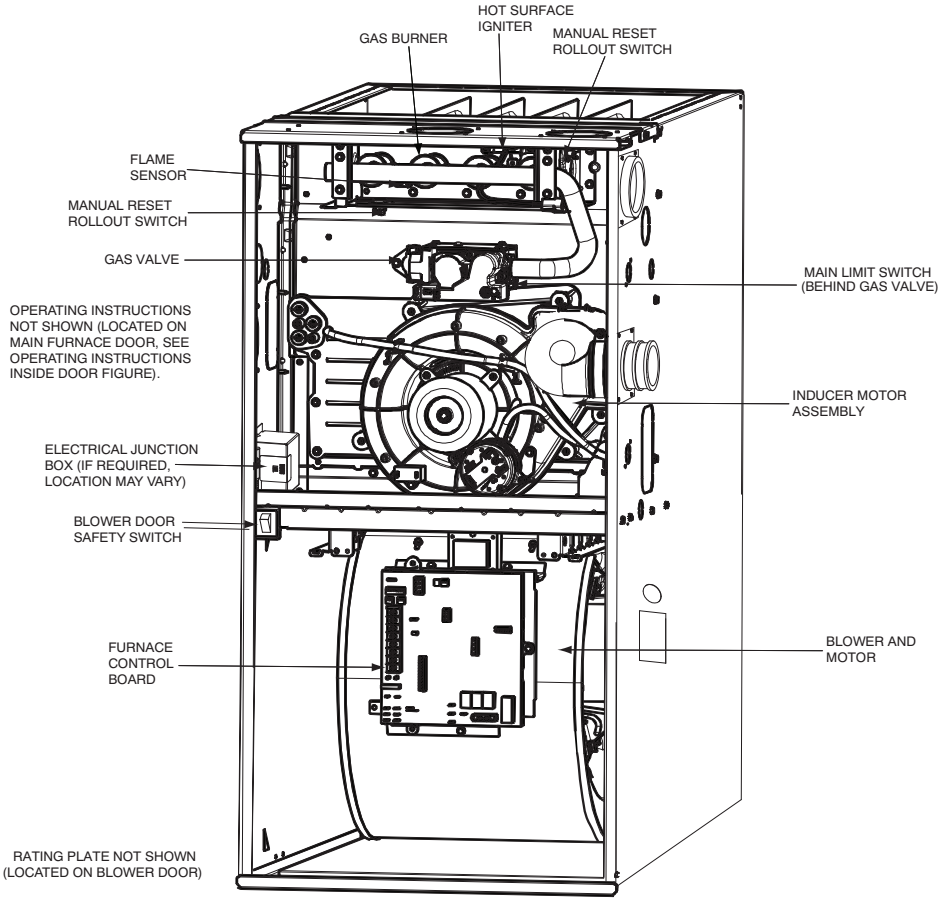


A190145

For California Residents:

If installed with a manufactured (mobile) home conversion kit in SCAQMD: This furnace does not meet the SCAQMD Rule 1111 14 ng/J NOx emission limit, and thus is subject to a mitigation fee of up to $450. This furnace is not eligible for the Clean Air Furnace Rebate Program: www.CleanAirFurnaceRebate.com

# SPECIFICATIONS

The furnace should be sized to provide 100 percent of the design heating load requirement plus any margin that occurs because of furnace model size capacity increments. None of the furnace model sizes can be used if the heating load is 12,000 BTUH or lower. Use Air Conditioning Contractors of America (Manual J and S); American Society of Heating, Refrigerating, and Air-Conditioning Engineers; or other approved engineering method to calculate heating load estimates and select the furnace. Excessive oversizing of the furnace may cause the furnace and/or vent to fail prematurely, customer discomfort and/or vent freezing.

Failure to follow these guidelines is considered faulty installation and/or misapplication of the furnace; and resulting failure, damage, or repairs may impact warranty coverage.

| Furnace Model | | 026E14--10 | 040E14--10 | 040E17--12 | 060E14--12 | 060E17--14 |
|---|---|---|---|---|---|---|
| **Heating Capacity and Efficiency** | | | | | | |
| Input (BTUh) | | 26,000 | 40,000 | 40,000 | 60,000 | 60,000 |
| Output (BTUh) | | 25,000 | 39,000 | 39,000 | 58,000 | 58,000 |
| Certified Temperature Rise Range ºF (ºC) | | 25 - 55 (14 - 31) | 40 - 70 (22 - 39) | 40 - 70 (22 - 39) | 45 - 75 (25 - 42) | 40 - 70 (22 - 39) |
| **Airflow Capacity and Blower Data** | | | | | | |
| Rated External Static Pressure (in. w.c.) | Heating | 0.10 | 0.10 | 0.10 | 0.12 | 0.12 |
| | Cooling | 0.50 | 0.50 | 0.50 | 0.50 | 0.50 |
| Airflow Delivery @ Rated ESP (CFM) | Heating | 605 | 695 | 650 | 930 | 1010 |
| | Cooling | 895 | 950 | 1010 | 1120 | 1330 |
| Cooling Capacity (tons) @ CFM/ton | 400 CFM/ton | 2 | 2 | 2.5 | 2.5 | 3.5 |
| | 350 CFM/ton | 2.50 | 2.50 | 3 | 3 | 4 |
| Direct-Drive Motor Type | | Electronically Commutated Motor (ECM) | | | | |
| Direct-Drive Motor HP | | 1/3 | 1/2 | 1/2 | 1/2 | 3/4 |
| Motor Full Load Amps | | 4.4 | 6.3 | 6.8 | 6.3 | 8.8 |
| RPM Range | | 400 - 1200 | 600 - 2000 | 400 - 1200 | 600 - 2000 | 400 - 1200 |
| Speed Selections | | 5 | 5 | 5 | 5 | 5 |
| Blower Wheel Dia x Width | in. | 11 x 7 | 11 x 7 | 11 x 8 | 11 x 7 | 11 x 8 |
| Air Filtration System | | Field Supplied Filter | | | | |
| Filter Used for Certified Watt Data | | 325531-40* | | | | |
| **Electrical Data** | | | | | | |
| Input Voltage | Volts-Hertz-Phase | 115-60-1 | | | | |
| Operating Voltage Range | Min-Max | 104-127 | | | | |
| Maximum Input Amps | Amps | 5.1 | 7.0 | 7.5 | 7.1 | 9.6 |
| Unit Ampacity | Amps | 7.3 | 9.7 | 10.3 | 9.8 | 12.9 |
| Minimum Wire Size | AWG | 14 | 14 | 14 | 14 | 14 |
| Maximum Wire Length@ Minimum Wire Size | Feet | 50 | 38 | 36 | 38 | 28 |
| | (M) | (15.5) | (11.7) | (10.9) | (11.5) | (8.7) |
| Maximum Fuse/Ckt Bkr (Time-Delay Type Recommended) | Amps | 15 | 15 | 15 | 15 | 15 |
| Transfomer Capacity (24vac output) | | 40 VA | | | | |
| External Control Power Available | Heating | 27.9 VA | | | | |
| | Cooling | 34.6 VA | | | | |
| **Controls** | | | | | | |
| Gas Connection Size | | 1/2" - NPT | | | | |
| Burners (Monoport) | | 2 | 2 | 2 | 3 | 3 |
| Gas Valve (Redundant) | Manufacturer | White Rodgers | | | | |
| Minimum Inlet Gas pressure (in. wc) | | 4.50 | | | | |
| Maximum Inlet Gas pressure (in. wc) | | 13.60 | | | | |
| Manufactured (Mobile) Home Kit | | See Accessory Listing | | | | |
| Ignition Device | | Silicon Nitride | | | | |
| Heating Blower Control (Heating Off-Delay) | | Adjustable: 90, 120, 150, 180 seconds | | | | |
| Cooling Blower Control (Time Delay Relay) | | 90 seconds | | | | |
| Communication System | | none | | | | |
| Thermostat Connections | | Com 24V, R, W, G, Y | | | | |
| Accessory Connections | | EAC (115vac); HUM (24vac); 1-stg AC (via Y) | | | | |

**Manufacturer reserves the right to change, at any time, specifications and designs without notice and without obligations.**

| Furnace Model | | 080E17--16 | 080E21--20 | 100E21--20 | 100E21--22 | 120E24--22 | 140E24--22 |
|---|---|---|---|---|---|---|---|
| **Heating Capacity and Efficiency** | | | | | | | |
| Input (BTUh) | | 80,000 | 80,000 | 100,000 | 100,000 | 120,000 | 140,000 |
| Output (BTUh) | | 78,000 | 78,000 | 97,000 | 97,000 | 117,000 | 135,000 |
| Certified Temperature Rise Range ºF (ºC) | | 40 - 70 (22 - 39) | 40 - 70 (22 - 39) | 40 - 70 (22 - 39) | 40 - 70 (22 - 39) | 40 - 70 (22 - 39) | 45 - 75 (25 - 42) |
| **Airflow Capacity and Blower Data** | | | | | | | |
| Rated External Static Pressure (in. w.c.) | Heating | 0.12 | 0.12 | 0.15 | 0.15 | 0.20 | 0.20 |
| | Cooling | 0.50 | 0.50 | 0.50 | 0.50 | 0.50 | 0.50 |
| Airflow Delivery @ Rated ESP (CFM) | Heating | 1325 | 1330 | 1730 | 1785 | 2020 | 2130 |
| | Cooling | 1665 | 1855 | 2125 | 2065 | 2105 | 2310 |
| Cooling Capacity (tons) @ CFM/ton | 400 CFM/ton | 4 | 5 | 5 | 5 | 5 | 5 |
| | 350 CFM/ton | 4.50 | 5.50 | 6 | 5.5 | 6 | 6 |
| Direct-Drive Motor Type | | Electronically Commutated Motor (ECM) | | | | | |
| Direct-Drive Motor HP | | 3/4 | 1 | 1 | 1 | 1 | 1 |
| Motor Full Load Amps | | 9.2 | 11.5 | 11.7 | 11.0 | 11.0 | 11.7 |
| RPM Range | | 400 - 1200 | 400 - 1200 | 400 - 1200 | 400 - 1300 | 400 - 1300 | 400 - 1200 |
| Speed Selections | | 5 | 5 | 5 | 5 | 5 | 5 |
| Blower Wheel Dia x Width | in. | 11 x 8 | 11 x 10 | 11 x 10 | 11 x 10 | 11 x 11 | 11 x 11 |
| Air Filtration System | | Field Supplied Filter | | | | | |
| Filter Used for Certified Watt Data | | 325531-40* | | | | | |
| **Electrical Data** | | | | | | | |
| Input Voltage | Volts-Hertz-Phase | 115-60-1 | | | | | |
| Operating Voltage Range | Min-Max | 104-127 | | | | | |
| Maximum Input Amps | Amps | 10 | 12.3 | 12.6 | 12.6 | 12.4 | 12.6 |
| Unit Ampacity | Amps | 13.4 | 16.3 | 16.7 | 16.7 | 16.7 | 16.7 |
| Minimum Wire Size | AWG | 14 | 12 | 12 | 12 | 12 | 12 |
| Maximum Wire Length@ Minimum Wire Size | Feet | 27 | 35 | 34 | 34 | 35 | 34 |
| | (M) | (8.4) | (10.7) | (10.5) | (10.5) | (10.7) | (10.5) |
| Maximum Fuse/Ckt Bkr (Time-Delay Type Recommended) | Amps | 15 | 20 | 20 | 20 | 20 | 20 |
| Transfomer Capacity (24vac output) | | 40 VA | | | | | |
| External Control Power Available | Heating | 27.9 VA | | | | | |
| | Cooling | 34.6 VA | | | | | |
| Controls | | | | | | | |
| Gas Connection Size | | 1/2" - NPT | | | | | |
| Burners (Monoport) | | 4 | 4 | 5 | 5 | 6 | 7 |
| Gas Valve (Redundant) | Manufacturer | White Rodgers | | | | | |
| Minimum Inlet Gas pressure (in. wc) | | 4.50 | | | | | |
| Maximum Inlet Gas pressure (in. wc) | | 13.60 | | | | | |
| Manufactured (Mobile) Home Kit | | See Accessory Listing | | | | | |
| Ignition Device | | Silicon Nitride | | | | | |
| Heating Blower Control (Heating Off-Delay) | | Adjustable: 90, 120, 150, 180 seconds | | | | | |
| Cooling Blower Control (Time Delay Relay) | | 90 seconds | | | | | |
| Communication System | | none | | | | | |
| Thermostat Connections | | Com 24V, R, W, G, Y | | | | | |
| Accessory Connections | | EAC (115vac); HUM (24vac); 1-stg AC (via Y) | | | | | |

**Manufacturer reserves the right to change, at any time, specifications and designs without notice and without obligations.**

# ACCESSORIES

| DESCRIPTION | PART NUMBER | 026E14--10 | 040E14--10 | 040E17--12 | 060E14--12 | 060E17--14 |
|---|---|---|---|---|---|---|
| Vent Kit - Through the Cabinet | KGADC0101BVC | X | X | X | X | X |
| Vent Terminal - Concentric - 2” (51 mm) | KGAVT0701CVT | See Venting Tables | | | | |
| Vent Terminal - Concentric - 3” (76 mm) | KGAVT0801CVT | | | | | |
| Vent Terminal Bracket - 2” (51 mm) | KGAVT0101BRA | | | | | |
| Vent Terminal Bracket - 3” (76 mm) | KGAVT0201BRA | | | | | |
| Vent Kit - Rubber Coupling | KGAAC0101RVC | | | | | |
| Freeze Protect Kit - Condensate Drain Line Tape | KGAHT0101CFP | X | X | X | X | X |
| Freeze Protect Kit - Condensate Trap with Heat Pad | KGAHT0201CFP | X | X | X | X | X |
| CPVC to PVC Drain Adapters - 1/2” CPVC to 3/4” PVC | KGAAD0110PVC | X | X | X | X | X |
| Horizontal Trap Grommet - Direct Vent | KGACK0101HCK | All 2-Pipe Horizontal | | | | |
| Condensate Neutralizer Kit | P908-0001* | X | X | X | X | X |
| External Trap Kit | KGAET0201ETK | X | X | X | X | X |
| Downflow Furnace Base Kit for Combustible Floors | KGASB0201ALL | X | X | X | X | X |
| Coil Adapter Kits - No Offset | KGADA0101ALL | X | X | X | X | X |
| Coil Adapter Kits - Single Offset | KGADA0201ALL | X | X | X | X | X |
| Coil Adapter Kits - Double Offset | KGADA0301ALL | X | X | X | X | X |
| Return Air Base (Upflow Applications) 14.0-in. wide | KGARP0301B14 | X | X | - | X | - |
| Return Air Base (Upflow Applications) 17.5-in. wide | KGARP0301B17 | - | - | X | - | X |
| IAQ Device Duct Adapters 20.0-in. IAQ to 16 in. Side Return | KGAAD0101MEC | 20”x25” IAQ Devices | | | | |
| IAQ Device Duct Adapters 24.0-in. IAQ to 16 in. Side Return | KGAAD0201MEC | 24”x25” IAQ Devices | | | | |
| Mobile Home Kit | KGCMH0601KIT | - | X | X | X | X |
| Gas Conversion Kit - Nat to LP | AGAGC9NPL01A | X | - | - | - | - |
| Gas Conversion Kit - LP to Nat | AGAGC9PNL01A | X | - | - | - | - |
| Gas Conversion Kit - Nat to LP | AGAGC9NPS01B | - | X | X | X | X |
| Gas Conversion Kit - LP to Nat | AGAGC9PNS01B | - | X | X | X | X |
| Gas Valve Tower Port Adapter Kit | 92-1003* | X | X | X | X | X |
| Twinning Kit | AGATWNPUA01A | - | - | - | - | X |
| Blower Speed Tap Jumper Kit (10 piece) | AGABLRJMP10A | X | X | X | X | X |
| External Bottom ReturnFilter Rack - 14.5 x 25 inches (366 x 635 mm) | FHG1425-2* | X | X | - | X | - |
| External Bottom ReturnFilter Rack - 16 x 25 inches (406 x 635 mm) | FHG1625-2* | - | - | X | - | X |
| Filter Washable - 16x25x3/4 (406x635x19 mm) | 325531-402* | X | X | X | X | X |

*. Purchased from RCD Components
X = Used with the model furnace

## ACCESSORIES (continued)

| DESCRIPTION | PART NUMBER | 080E17--16 | 080E21--20 | 100E21--20 | 100E21--22 | 120E24--22 | 140E24--22 |
|---|---|---|---|---|---|---|---|
| Vent Kit - Through the Cabinet | KGADC0101BVC | X | X | X | X | X | X |
| Vent Terminal - Concentric - 2” (51 mm) | KGAVT0701CVT | See Venting Tables | | | | | |
| Vent Terminal - Concentric - 3” (76 mm) | KGAVT0801CVT | | | | | | |
| Vent Terminal Bracket - 2” (51 mm) | KGAVT0101BRA | | | | | | |
| Vent Terminal Bracket - 3” (76 mm) | KGAVT0201BRA | | | | | | |
| Vent Kit - Rubber Coupling | KGAAC0101RVC | | | | | | |
| Freeze Protect Kit - Condensate Drain Line Tape | KGAHT0101CFP | X | X | X | X | X | X |
| Freeze Protect Kit - Condensate Trap with Heat Pad | KGAHT0201CFP | X | X | X | X | X | X |
| CPVC to PVC Drain Adapters - 1/2” CPVC to 3/4” PVC | KGAAD0110PVC | X | X | X | X | X | X |
| Horizontal Trap Grommet - Direct Vent | KGACK0101HCK | All 2-Pipe Horizontal | | | | | |
| Condensate Neutralizer Kit | P908-0001* | X | X | X | X | X | X |
| External Trap Kit | KGAET0201ETK | X | X | X | X | X | X |
| Downflow Furnace Base Kit for Combustible Floors | KGASB0201ALL | X | X | X | X | X | X |
| Coil Adapter Kits - No Offset | KGADA0101ALL | X | X | X | X | X | X |
| Coil Adapter Kits - Single Offset | KGADA0201ALL | X | X | X | X | X | X |
| Coil Adapter Kits - Double Offset | KGADA0301ALL | X | X | X | X | X | X |
| Return Air Base (Upflow Applications) 17.5-in. wide | KGARP0301B17 | X | - | - | - | - | - |
| Return Air Base (Upflow Applications) 21.0-in. wide | KGARP0301B21 | - | X | X | X | - | - |
| Return Air Base (Upflow Applications) 24.5-in. wide | KGARP0301B24 | - | - | - | - | X | X |
| IAQ Device Duct Adapters 20.0-in. IAQ to 16 in. Side Return | KGAAD0101MEC | 20”x25” IAQ Devices | | | | | |
| IAQ Device Duct Adapters 24.0-in. IAQ to 16 in. Side Return | KGAAD0201MEC | 24”x25” IAQ Devices | | | | | |
| Mobile Home Kit | KGCMH0601KIT | X | X | X | X | X | - |
| Gas Conversion Kit - Nat to LP | AGAGC9NPS01B | X | X | X | X | X | X |
| Gas Conversion Kit - LP to Nat | AGAGC9PNS01B | X | X | X | X | X | X |
| Gas Valve Tower Port Adapter Kit | 92-1003* | X | X | X | X | X | X |
| Twinning Kit | AGATWNPUA01A | X | X | X | | X | X |
| Blower Speed Tap Jumper Kit (10 piece) | AGABLRJMP10A | X | X | X | X | X | X |
| External Bottom Return Filter Rack - 16 x 25 inches (406 x 635 mm) | FHG1625-2* | X | - | - | - | - | - |
| External Bottom Return Filter Rack - 20x 25 inches (508 x 635 mm) | FHG2025-2* | - | X | X | X | | |
| External Bottom Return Filter Rack - 24.5 x 24 inches (607 x 607 mm) | FHG2424-2* | - | - | - | - | X | X |
| Filter Washable - 16x25x3/4 (406x635x19 mm) | 325531-402* | X | - | - | - | - | - |
| Filter Washable - 20x25x3/4 (508x635x19 mm) | 325531-403* | - | X | X | X | - | - |
| Filter Washable - 24x25x3/4 (610x635x19 mm) | 325531-404* | - | - | - | - | X | X |

*. Order from RCD Components
X = Used with the model furnace

# ACCESSORIES (continued)

| DESCRIPTION | | |
|---|---|---|
| Gas Orifice Kit - #42 (Nat Gas) | LH32DB207 | See Installation Instructions for model, altitude, and heat value usages. |
| Gas Orifice Kit - #43 (Nat Gas) | LH32DB202 | |
| Gas Orifice Kit - #44 (Nat Gas) | LH32DB200 | |
| Gas Orifice Kit - #45 (Nat Gas) | LH32DB205 | |
| Gas Orifice Kit - #46 (Nat Gas) | LH32DB208 | |
| Gas Orifice Kit - #47 (Nat Gas) | LH32DB078 | |
| Gas Orifice Kit - #48 (Nat Gas) | LH32DB076 | |
| Gas Orifice Kit - #54 (LP) | LH32DB203 | |
| Gas Orifice Kit - #55 (LP) | LH32DB201 | |
| Gas Orifice Kit - #56 (LP) | LH32DB206 | |
| Gas Orifice Kit - 1.25mm (LP) | LH32DB209 | |
| Gas Orifice Kit - 1.30mm (LP) | LH32DB210 | |

| DESCRIPTION | ACCESSORY |
|---|---|
| HUMIDIFIER | Model HUM |
| HEAT RECOVERY VENTILATOR | Model HRV |
| ENERGY RECOVERY VENTILATOR | Model ERV |
| UV LIGHTS | Model UVL |

Carrier has a wide variety of thermostats for your system, please visit **www.**Carrier**.com** to see all thermostat and IAQ products.

| DESCRIPTION | ACCESSORY | 14” | 17” | 21” | 24” |
|---|---|---|---|---|---|
| Carrier Carbon Monoxide Alarm (10 pack) | COALMCCNRB02-A10 | X | X | X | X |
| Carrier Infinity Air Purifier - 16x25 (407x635 mm) | DGAPAXX1625 | X | X | - | - |
| Carrier Infinity Air Purifier - 20x25 (508x635 mm) | DGAPAXX2025 | - | - | X | X |
| Carrier Infinity Air Purifier Repl. Filter- 16x25 (407x635 mm) | PGAPXCAR1625A02 | X | X | - | - |
| Carrier Infinity Air Purifier Repl. Filter- 20x25 (508x635 mm) | PGAPXCAR2025A02 | - | - | X | X |
| Cartridge Media Filter - 16” (407 mm) (MERV 11) | FILXXCAR0116 | X | X | - | - |
| Cartridge Media Filter - 16” (407 mm) (MERV 8) | FILXXCAR0016 | X | X | - | - |
| Cartridge Media Filter - 20” (508 mm) (MERV 8) | FILXXCAR0020 | - | - | X | - |
| Cartridge Media Filter - 20” (508 mm) (MERV11) | FILXXCAR0120 | - | - | X | - |
| Cartridge Media Filter - 24” (610 mm) (MERV 8) | FILXXCAR0024 | - | - | - | X |
| Cartridge Media Filter - 24” (610 mm) (MERV11) | FILXXCAR0124 | - | - | - | X |
| EZ Flex Cabinet Side or Bottom - 16” | EZXCAB--0016 | X | X | - | - |
| EZ Flex Cabinet Side or Bottom - 20” | EZXCAB--0020 | - | - | X | X |
| EZ Flex Replacement Filters 16” MERV 10 | EXPXXFIL0016 | X | X | - | - |
| EZ Flex Replacement Filters 16” MERV 13 | EXPXXFIL0316 | X | X | - | - |
| EZ Flex Replacement Filters 20” MERV 10 | EXPXXFIL0020 | - | - | X | - |
| EZ Flex Replacement Filters 20” MERV 13 | EXPXXFIL0320 | - | - | X | - |
| EZ Flex Replacement Filters 24” MERV 10 | EXPXXFIL0024 | - | - | - | X |
| EZ Flex Replacement Filters 24” MERV 13 | EXPXXFIL0324 | - | - | - | X |
| EZ-Flex Filter with End Caps - 16” (407 mm) (MERV 10) | EXPXXUNV0016 | X | X | - | - |
| EZ-Flex Filter with End Caps - 16” (407 mm) (MERV 13) | EXPXXUNV0316 | X | X | - | - |
| EZ-Flex Filter with End Caps - 20” (508 mm) (MERV 10) | EXPXXUNV0020 | - | - | X | - |
| EZ-Flex Filter with End Caps - 20” (508 mm) (MERV 13) | EXPXXUNV0320 | - | - | X | - |
| EZ-Flex Filter with End Caps - 24” (610 mm) (MERV 10) | EXPXXUNV0024 | - | - | - | X |
| EZ-Flex Filter with End Caps - 24” (610 mm) (MERV 13) | EXPXXUNV0324 | - | - | - | X |
| Media Filter Cabinet - 20” | FILCABXL0020 | - | - | X | - |
| Media Filter Cabinet - 24” | FILCABXL0024 | - | - | - | X |
| Media Filter Cabinet -16” | FILCABXL0016 | X | X | - | - |

**Manufacturer reserves the right to change, at any time, specifications and designs without notice and without obligations.**

# Air Delivery - CFM (Bottom Return With Filter)

| UNIT SIZE | WIRE LEAD COLOR | SPEED TAPS [2, 3] (Function) | EXTERNAL STATIC PRESSURE (IN.W.C.) | | | | | | | | | |
|---|---|---|---|---|---|---|---|---|---|---|---|---|
| | | | 0.1 | 0.2 | 0.3 | 0.4 | 0.5 | 0.6 | 0.7 | 0.8 | 0.9 | 1.0 |
| 026E14--10 | Black | Cooling. Do not use for heating | 1045 | 1010 | 975 | 935 | 895 | 855 | 810 | 760 | 715 | 670 |
| | Yellow | Alt Cooling or alt Heating | 820 | 770 | 730 | 680 | 630 | 585 | 530 | 480 | 435 | 385 |
| | Orange | Alt Cooling or alt Heating | 655 | 600 | 550 | 495 | 435 | 385 | 335 | 265 | - | - |
| | Blue [7] | Heating or alt Cooling | 605 | 545 | 490 | 435 | 375 | 335 | 255 | - | - | - |
| | Red [7] | Alt Cooling. Do not use for heating | 480 | 415 | 360 | 305 | 235 | - | - | - | - | - |
| 040E14--10 | Gray | Cooling. Do not use for heating | 1050 | 1025 | 1000 | 975 | 950 | 920 | 895 | 870 | 845 | 820 |
| | Yellow | Alt Cooling. Do not use for heating | 920 | 890 | 860 | 830 | 805 | 775 | 745 | 715 | 690 | 660 |
| | Orange | Alt Cooling or alt Heating | 735 | 700 | 665 | 630 | 595 | 555 | 525 | 490 | 450 | 415 |
| | Blue | Heating or alt Cooling | 695 | 660 | 625 | 590 | 555 | 515 | 480 | 445 | 405 | 370 |
| | Red [7] | Alt Cooling. Do not use for heating | 540 | 495 | 455 | 410 | 365 | 320 | 280 | 235 | - | - |
| 040E17--12 | Gray | Cooling. Do not use for heating | 1180 | 1140 | 1100 | 1055 | 1010 | 960 | 915 | 860 | 805 | 735 |
| | Yellow | Alt Cooling. Do not use for heating | 880 | 845 | 810 | 780 | 745 | 710 | 675 | 640 | 600 | 570 |
| | Blue | Heating or alt Cooling | 650 | 610 | 560 | 515 | 470 | 435 | 395 | 360 | 325 | 265 |
| | Orange [7] | Alt Cooling. Do not use for heating | 525 | 460 | 405 | 350 | 320 | 275 | 210 | - | - | - |
| | Red [7] | Alt Cooling. Do not use for heating | 515 | 420 | 350 | 310 | 270 | 205 | - | - | - | - |
| 060E14--12 | Gray | Cooling. Do not use for heating | 1225 | 1200 | 1175 | 1145 | 1120 | 1095 | 1065 | 1040 | 1015 | 990 |
| | Yellow | Alt Cooling. Do not use for heating | 1105 | 1080 | 1050 | 1020 | 990 | 965 | 935 | 905 | 880 | 850 |
| | Blue | Heating or alt Cooling | 940 | 910 | 875 | 845 | 810 | 775 | 745 | 710 | 680 | 645 |
| | Orange | Alt Cooling or alt Heating | 725 | 690 | 650 | 610 | 570 | 530 | 490 | 445 | 405 | 365 |
| | Red [7] | Alt Cooling. Do not use for heating | 545 | 495 | 445 | 395 | 345 | 295 | 245 | - | - | - |
| 060E17--14 | Gray | Cooling. Do not use for heating | 1475 | 1445 | 1405 | 1370 | 1330 | 1290 | 1255 | 1215 | 1175 | 1140 |
| | Yellow | Alt Cooling or alt Heating | 1230 | 1190 | 1155 | 1120 | 1085 | 1050 | 1005 | 970 | 925 | 885 |
| | Orange | Alt Cooling or alt Heating | 1070 | 1030 | 990 | 950 | 920 | 875 | 840 | 800 | 755 | 715 |
| | Blue | Heating or alt Cooling | 1020 | 975 | 940 | 900 | 860 | 820 | 775 | 740 | 690 | 650 |
| | Red | Alt Cooling. Do not use for heating | 700 | 590 | 535 | 485 | 460 | 390 | 340 | 300 | 275 | 210 |
| 080E17--16 | Gray [5, 6] | Cooling. Do not use for heating | 1820 | 1790 | 1755 | 1710 | 1665 | 1620 | 1570 | 1525 | 1480 | 1435 |
| | Yellow | Alt Cooling or alt Heating | 1455 | 1420 | 1380 | 1345 | 1310 | 1275 | 1240 | 1205 | 1170 | 1135 |
| | Blue | Heating or alt Cooling | 1335 | 1295 | 1260 | 1220 | 1185 | 1150 | 1110 | 1075 | 1040 | 1005 |
| | Orange | Alt Cooling or alt Heating | 1110 | 1065 | 1020 | 980 | 935 | 895 | 850 | 810 | 770 | 725 |
| | Red [7] | Alt Cooling. Do not use for heating | 425 | 335 | 240 | - | - | - | - | - | - | - |
| 080E21--20 | Gray [5, 6] | Cooling. Do not use for heating | 2045 | 1995 | 1950 | 1900 | 1855 | 1805 | 1760 | 1710 | 1660 | 1615 |
| | Yellow | Alt Cooling. Do not use for heating | 1665 | 1625 | 1575 | 1530 | 1480 | 1435 | 1385 | 1340 | 1285 | 1240 |
| | Orange | Alt Cooling or alt Heating | 1475 | 1420 | 1370 | 1320 | 1270 | 1220 | 1170 | 1125 | 1070 | 1025 |
| | Blue | Heating or alt Cooling | 1345 | 1290 | 1235 | 1180 | 1130 | 1080 | 1025 | 975 | 935 | 885 |
| | Red | Alt Cooling. Do not use for heating | 1155 | 1080 | 1015 | 960 | 895 | 845 | 790 | 735 | 675 | 620 |
| 100E21--20 | Gray [5, 6] | Cooling. Do not use for heating | 2280 | 2240 | 2200 | 2165 | 2125 | 2085 | 2020 | 1910 | 1795 | 1665 |
| | Yellow [5, 6] | Alt Cooling. Do not use for heating | 1860 | 1815 | 1775 | 1730 | 1690 | 1645 | 1605 | 1560 | 1515 | 1465 |
| | Blue | Heating or alt Cooling | 1755 | 1710 | 1665 | 1620 | 1580 | 1535 | 1485 | 1440 | 1390 | 1340 |
| | Orange | Alt Cooling or alt Heating | 1530 | 1480 | 1425 | 1380 | 1325 | 1275 | 1215 | 1160 | 1110 | 1060 |
| | Red | Cooling. Do not use for heating | 1340 | 1285 | 1230 | 1170 | 1110 | 1050 | 990 | 930 | 875 | 820 |
| 100E21--22 | Gray [5, 6] | Cooling. Do not use for heating | 2215 | 2180 | 2145 | 2105 | 2065 | 2025 | 1985 | 1940 | 1900 | 1860 |
| | Yellow [5, 6] | Alt Cooling. Do not use for heating | 2115 | 2080 | 2035 | 2000 | 1960 | 1920 | 1880 | 1835 | 1790 | 1740 |
| | Orange [5, 6] | Alt Cooling. Do not use for heating | 1975 | 1935 | 1890 | 1850 | 1805 | 1760 | 1720 | 1670 | 1620 | 1570 |
| | Blue [5, 6] | Heating or alt Cooling | 1810 | 1765 | 1715 | 1670 | 1620 | 1570 | 1515 | 1460 | 1405 | 1355 |
| | Red | Alt Cooling. Do not use for heating | 1530 | 1475 | 1425 | 1360 | 1300 | 1240 | 1175 | 1115 | 1055 | 1000 |
| 120E24--22 | Gray [5, 6] | Cooling. Do not use for heating | 2310 | 2255 | 2205 | 2155 | 2105 | 2055 | 2005 | 1955 | 1910 | 1885 |
| | Blue [5, 6] | Heating or alt Cooling | 2065 | 2020 | 1970 | 1915 | 1860 | 1805 | 1740 | 1690 | 1635 | 1580 |
| | Yellow [5, 6] | Alt Cooling or alt Heating | 1850 | 1800 | 1745 | 1690 | 1640 | 1585 | 1530 | 1475 | 1420 | 1360 |
| | Orange | Alt Cooling. Do not use for heating | 1500 | 1440 | 1380 | 1320 | 1260 | 1205 | 1145 | 1085 | 1035 | 955 |
| | Red | Alt Cooling. Do not use for heating | 1070 | 960 | 875 | 805 | 710 | 630 | 560 | 490 | 420 | 355 |
| 140E24--22 | Gray [5, 6] | Cooling. Do not use for heating | 2505 | 2465 | 2425 | 2370 | 2310 | 2250 | 2180 | 2090 | 1955 | 1810 |
| | Blue [5, 6] | Heating or alt Cooling | 2180 | 2130 | 2085 | 2035 | 1990 | 1945 | 1900 | 1850 | 1800 | 1755 |
| | Yellow [5, 6] | Alt Cooling or alt Heating | 1910 | 1855 | 1810 | 1760 | 1705 | 1655 | 1605 | 1555 | 1505 | 1460 |
| | Orange | Alt Cooling. Do not use for heating | 1560 | 1505 | 1445 | 1380 | 1325 | 1265 | 1210 | 1155 | 1100 | 1040 |
| | Red [7] | Alt Cooling. Do not use for heating | 855 | 760 | 665 | 565 | 470 | 385 | 305 | - | - | - |

**NOTE:**

1. A filter is required for each return-air inlet. Airflow performance includes a 3/4-in. (19 mm) washable filter media (see accessory list). To determine airflow performance without this filter, assume an additional 0.1 in. w.c. available external static pressure.
2. **ADJUST THE BLOWER SPEED TAPS AS NECESSARY FOR THE PROPER AIR TEMPERATURE RISE FOR EACH INSTALLATION.**
3. The "Function" column identifies which speed taps can be used for heating.
4. If the same motor speed tap is needed for heating and cooling, a Jumper Wire accessory kit is available, see Product Data accessories for the current Jumper Wire accessory part number. Reference the "Start-up, Adjustments, and Safety Check" section of installation instructions for further Jumper Wire instructions.
5. Airflows over 1800 CFM require bottom return, two-side return, or bottom and side return. A minimum filter size of 20" x 25" (508 x 635 mm) is required.
6. For upflow applications, air entering from one side into both the side of the furnace and a return air base counts as a side and bottom return.
7. The "-" entry indicates an unstable operating condition.

**Manufacturer reserves the right to change, at any time, specifications and designs without notice and without obligations.**

# DIMENSIONAL DRAWING

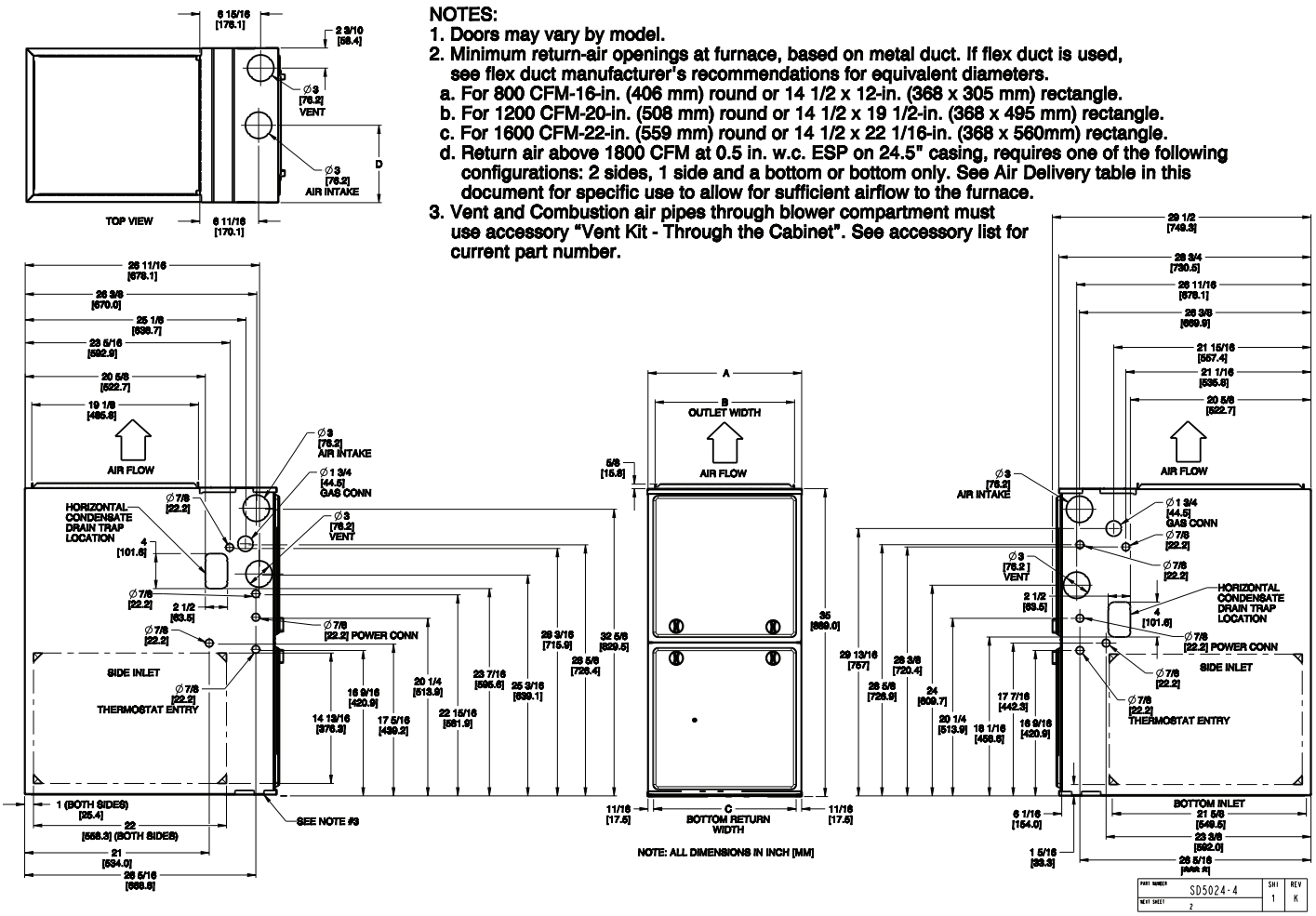


NOTES:
1. Doors may vary by model.
2. Minimum return-air openings at furnace, based on metal duct. If flex duct is used, see flex duct manufacturer's recommendations for equivalent diameters.
   a. For 800 CFM-16-in. (406 mm) round or 14 1/2 x 12-in. (368 x 305 mm) rectangle.
   b. For 1200 CFM-20-in. (508 mm) round or 14 1/2 x 19 1/2-in. (368 x 495 mm) rectangle.
   c. For 1600 CFM-22-in. (559 mm) round or 14 1/2 x 22 1/16-in. (368 x 560mm) rectangle.
   d. Return air above 1800 CFM at 0.5 in. w.c. ESP on 24.5" casing, requires one of the following configurations: 2 sides, 1 side and a bottom or bottom only. See Air Delivery table in this document for specific use to allow for sufficient airflow to the furnace.
3. Vent and Combustion air pipes through blower compartment must use accessory "Vent Kit - Through the Cabinet". See accessory list for current part number.

A180203

| FURNACE SIZE | A | B | C | D | SHIP WT. |
|---|---|---|---|---|---|
| | CABINET WIDTH | OUTLET WIDTH | BOTTOM INLET WIDTH | AIR INTAKE | LB (KG) |
| **026E14--10** | 14-3/16 (361) | 12-1/2 (319) | 12-9/16 (322) | 7-1/8 (181) | 118.0 (53.5) |
| **040E14--10** | 14-3/16 (361) | 12-1/2 (319) | 12-9/16 (322) | 7-1/8 (181) | 120 (54.4) |
| **040E17--12** | 17-1/2 (445) | 15-7/8 (403) | 16 (406) | 8-3/4 (222) | 126.5 (57.4) |
| **060E14--12** | 14-3/16 (361) | 12-1/2 (319) | 12-9/16 (322) | 7-1/8 (181) | 129 (58.5) |
| **060E17--14** | 17-1/2 (445) | 15-7/8 (403) | 16 (406) | 8-3/4 (222) | 138.5 (62.8) |
| **080E17--16** | 17-1/2 (445) | 15-7/8 (403) | 16 (406) | 8-3/4 (222) | 146.5 (66.5) |
| **080E21--20** | 21 (533) | 19-3/8 (492) | 19-1/2 (495) | 10-1/2 (267) | 154.5 (70.1) |
| **100E21--20** | 21 (533) | 19-3/8 (492) | 19-1/2 (495) | 10-1/2 (267) | 164.5 (74.6) |
| **100E21--22** | 21 (533) | 19-3/8 (492) | 19-1/2 (495) | 10-1/2 (267) | 164.5 (74.6) |
| **120E24--22** | 24-1/2 (622) | 22-7/8 (581) | 23 (584) | 12-1/4 (311) | 179.5 (81.4) |
| **140E24--22** | 24-1/2 (622) | 22-7/8 (581) | 23 (584) | 12-1/4 (311) | 189 (85.7) |

**Manufacturer reserves the right to change, at any time, specifications and designs without notice and without obligations.**

# MAXIMUM ALLOWABLE EXPOSED VENT LENGTH

## Maximum Allowable Exposed Vent Lengths in Unconditioned Space Insulation Table - Ft.

| Winter Design Temp °F | Unit Size | 26,000* BTUH | | | | | |
|---|---|---|---|---|---|---|---|
| | | Uninsulation | | 3/8-in. Insulation | | 1/2-in. Insulation | |
| | Pipe Dia. in. | 1 ½ | 2 | 1 ½ | 2 | 1 ½ | 2 |
| | 20 | 20 | 20 | 50 | 45 | 60 | 50 |
| | 0 | 5 | 5 | 25 | 20 | 30 | 25 |
| | -20 | | | 15 | 10 | 20 | 15 |
| | -40 | | | 10 | 5 | 15 | 10 |

| Winter Design Temp °F | Unit Size | 40,000* BTUH | | | | | | | | | 60,000 BTUH | | | | | | | | | | | |
|---|---|---|---|---|---|---|---|---|---|---|---|---|---|---|---|---|---|---|---|---|---|---|
| | | Uninsulated | | | 3/8-in. Insulation | | | 1/2-in. Insulation | | | Uninsulated | | | | 3/8-in. Insulation | | | | 1/2-in. Insulation | | | |
| | Pipe Dia. in. | 1 ½ | 2 | 2 ½ | 1 ½ | 2 | 2 ½ | 1 ½ | 2 | 2 ½ | 1 ½ | 2 | 2 ½ | 3 | 1 ½ | 2 | 2 ½ | 3 | 1 ½ | 2 | 2 ½ | 3 |
| | 20 | 20 | 20 | 20 | 20 | 50 | 45 | 20 | 60 | 50 | 20 | 30 | 30 | 25 | 20 | 75 | 65 | 60 | 20 | 85 | 75 | 65 |
| | 0 | 10 | 5 | 5 | 20 | 25 | 20 | 20 | 30 | 25 | 15 | 15 | 10 | 10 | 20 | 40 | 30 | 25 | 20 | 45 | 40 | 30 |
| | -20 | 5 | | | 20 | 15 | 10 | 20 | 20 | 15 | 10 | 5 | | | 20 | 25 | 20 | 15 | 20 | 30 | 25 | 20 |
| | -40 | | | | 15 | 10 | 5 | 15 | 15 | 10 | 5 | | | | 20 | 15 | 15 | 10 | 20 | 20 | 15 | 10 |

| Winter Design Temp °F | Unit Size | 80,000 BTUH | | | | | | | | | | | | | | |
|---|---|---|---|---|---|---|---|---|---|---|---|---|---|---|---|---|
| | | Uninsulated | | | | | 3/8-in. Insulation | | | | | 1/2-in. Insulation | | | | |
| | Pipe Dia. in. | 1 ½ | 2 | 2 ½ | 3 | 4 | 1 ½ | 2 | 2 ½ | 3 | 4 | 1 ½ | 2 | 2 ½ | 3 | 4 |
| | 20 | 15 | 40 | 40 | 35 | 30 | 15 | 50 | 90 | 75 | 65 | 15 | 50 | 70 | 70 | 70 |
| | 0 | 15 | 20 | 15 | 10 | 5 | 15 | 50 | 45 | 35 | 30 | 15 | 50 | 50 | 40 | 35 |
| | -20 | 15 | 10 | 5 | | | 15 | 35 | 30 | 20 | 15 | 15 | 40 | 30 | 25 | 15 |
| | -40 | 10 | 5 | | | | 15 | 25 | 20 | 15 | 5 | 15 | 30 | 25 | 20 | 10 |

| Winter Design Temp °F | Unit Size | 100,000 BTUH | | | | | | | | | | | | 120,000 BTUH | | | | | | | | |
|---|---|---|---|---|---|---|---|---|---|---|---|---|---|---|---|---|---|---|---|---|---|---|
| | | Uninsulated | | | | 3/8-in. Insulation | | | | 1/2-in. Insulation | | | | Uninsulated | | | 3/8-in. Insulation | | | 1/2-in. Insulation | | |
| | Pipe Dia. in. | 2 | 2 ½ | 3 | 4 | 2 | 2½ | 3 | 4 | 2 | 2½ | 3 | 4 | 2½ | 3 | 4 | 2 ½ | 3 | 4 | 2 ½ | 3 | 4 |
| | 20 | 20 | 50 | 40 | 35 | 20 | 80 | 95 | 80 | 20 | 80 | 105 | 90 | 10 | 50 | 40 | 10 | 75 | 95 | 10 | 75 | 105 |
| | 0 | 20 | 20 | 15 | 10 | 20 | 55 | 45 | 35 | 20 | 65 | 55 | 45 | 10 | 20 | 15 | 10 | 55 | 45 | 10 | 65 | 50 |
| | -20 | 15 | 10 | 5 | | 20 | 35 | 30 | 20 | 20 | 45 | 35 | 25 | 10 | 10 | | 10 | 35 | 25 | 10 | 45 | 30 |
| | -40 | 10 | 5 | | | 20 | 25 | 20 | 10 | 20 | 30 | 25 | 15 | 10 | 5 | | 10 | 25 | 15 | 10 | 30 | 20 |

| Winter Design Temp °F | Unit Size | 140,000* BTUH | | | | | | | | |
|---|---|---|---|---|---|---|---|---|---|---|
| | | Uninsulated | | | 3/8-in. Insulation | | | 1/2-in. Insulation | | |
| | Pipe Dia. in. | 2 ½ | 3 | 4 | 2 ½ | 3 | 4 | 2 ½ | 3 | 4 |
| | 20 | 5 | 55 | 50 | 5 | 65 | 105 | 5 | 65 | 125 |
| | 0 | 5 | 25 | 15 | 5 | 65 | 50 | 5 | 65 | 60 |
| | -20 | 5 | 10 | 5 | 5 | 45 | 30 | 5 | 50 | 40 |
| | -40 | 5 | 5 | | 5 | 30 | 20 | 5 | 35 | 25 |

*. Not all model families have this size.

## Maximum Allowable Exposed Vent Length in Unconditioned Space - Meters

| Winter Design Temp °C | Unit Size | 26,000* BTUH | | | | | |
|---|---|---|---|---|---|---|---|
| | | Uninsulation | | 3/8-in. Insulation | | 1/2-in. Insulation | |
| | Pipe Dia. mm | 38 | 51 | 38 | 51 | 38 | 51 |
| | -7 | 6.1 | 6.1 | 15.2 | 13.7 | 18.3 | 15.2 |
| | -18 | 1.5 | 1.5 | 7.6 | 6.1 | 9.1 | 7.6 |
| | -29 | | | 4.6 | 3.0 | 6.1 | 4.6 |
| | -40 | | | 3.0 | 1.5 | 4.6 | 3.0 |

| Winter Design Temp °C | Unit Size | 40,000 BTUH | | | | | | | | | 60,000 BTUH | | | | | | | | | | | |
|---|---|---|---|---|---|---|---|---|---|---|---|---|---|---|---|---|---|---|---|---|---|---|
| | | Uninsulated | | | 3/8-in. Insulation | | | 1/2-in. Insulation | | | Uninsulated | | | | 3/8-in. Insulation | | | | 1/2-in. Insulation | | | |
| | Pipe Dia. mm | 38 | 51 | 64 | 38 | 51 | 64 | 38 | 51 | 64 | 38 | 51 | 64 | 76 | 38 | 51 | 64 | 76 | 38 | 51 | 64 | 76 |
| | -7 | 6.1 | 6.1 | 6.1 | 6.1 | 15.2 | 13.7 | 6.1 | 18.3 | 15.2 | 6.1 | 9.1 | 9.1 | 7.6 | 6.1 | 22.9 | 19.8 | 18.3 | 6.1 | 25.9 | 22.9 | 19.8 |
| | -18 | 3.0 | 1.5 | 1.5 | 6.1 | 7.6 | 6.1 | 6.1 | 9.1 | 7.6 | 4.6 | 4.6 | 3.0 | 3.0 | 6.1 | 12.2 | 9.1 | 7.6 | 6.1 | 13.7 | 12.2 | 9.1 |
| | -29 | 1.5 | | | 6.1 | 4.6 | 3.0 | 6.1 | 6.1 | 4.6 | 3.0 | 1.5 | | | 6.1 | 7.6 | 6.1 | 4.6 | 6.1 | 9.1 | 7.6 | 6.1 |
| | -40 | | | | 4.6 | 3.0 | 1.5 | 4.6 | 4.6 | 3.0 | 1.5 | | | | 6.1 | 4.6 | 4.6 | 3.0 | 6.1 | 6.1 | 4.6 | 3.0 |

Manufacturer reserves the right to change, at any time, specifications and designs without notice and without obligations.

| Winter Design Temp °C | Unit Size | 80,000 BTUH | | | | | | | | | | | | | | |
|---|---|---|---|---|---|---|---|---|---|---|---|---|---|---|---|---|
| | | Uninsulated | | | | | 3/8-in. Insulation | | | | | 1/2-in. Insulation | | | | |
| | Pipe Dia. mm | 38 | 51 | 64 | 76 | 102 | 38 | 51 | 64 | 76 | 102 | 38 | 51 | 64 | 76 | 102 |
| | -7 | 4.6 | 12.2 | 12.2 | 10.7 | 9.1 | 4.6 | 15.2 | 27.4 | 22.9 | 19.8 | 4.6 | 15.2 | 21.3 | 21.3 | 21.3 |
| | -18 | 4.6 | 6.1 | 4.6 | 3.0 | 1.5 | 4.6 | 15.2 | 13.7 | 10.7 | 9.1 | 4.6 | 15.2 | 15.2 | 12.2 | 10.7 |
| | -29 | 4.6 | 3.0 | 1.5 | | | 4.6 | 10.7 | 9.1 | 6.1 | 4.6 | 4.6 | 12.2 | 9.1 | 7.6 | 4.6 |
| | -40 | 3.0 | 1.5 | | | | 4.6 | 7.6 | 6.1 | 4.6 | 1.5 | 4.6 | 9.1 | 7.6 | 6.1 | 3.0 |

| Winter Design Temp °C | Unit Size | 100,000 BTUH | | | | | | | | | | | | 120,000 BTUH | | | | | | | | |
|---|---|---|---|---|---|---|---|---|---|---|---|---|---|---|---|---|---|---|---|---|---|---|
| | | Uninsulated | | | | 3/8-in. Insulation | | | | 1/2-in. Insulation | | | | Uninsulated | | | 3/8-in. Insulation | | | 1/2-in. Insulation | | |
| | Pipe Dia. mm | 51 | 64 | 76 | 102 | 51 | 64 | 76 | 102 | 51 | 64 | 76 | 102 | 64 | 76 | 102 | 64 | 76 | 102 | 64 | 76 | 102 |
| | -7 | 6.1 | 15.2 | 12.2 | 10.7 | 6.1 | 24.4 | 28.9 | 24.4 | 6.1 | 24.4 | 32.0 | 27.4 | 3.0 | 15.2 | 12.2 | 3.0 | 22.9 | 28.9 | 3.0 | 22.9 | 32.0 |
| | -18 | 6.1 | 6.1 | 4.6 | 3.0 | 6.1 | 16.8 | 13.7 | 10.7 | 6.1 | 19.8 | 16.7 | 13.7 | 3.0 | 6.1 | 4.6 | 3.0 | 16.8 | 13.7 | 3.0 | 19.8 | 15.2 |
| | -29 | 4.6 | 3.0 | 1.5 | | 6.1 | 10.7 | 9.1 | 6.1 | 6.1 | 13.7 | 10.7 | 7.6 | 3.0 | 3.0 | | 3.0 | 10.7 | 7.6 | 3.0 | 13.7 | 9.1 |
| | -40 | 3.0 | 1.5 | | | 6.1 | 7.6 | 6.1 | 3.0 | 6.1 | 9.1 | 7.6 | 4.6 | 3.0 | 1.5 | | 3.0 | 7.6 | 4.6 | 3.0 | 9.1 | 6.1 |

| Winter Design Temp °C | Unit Size | 140,000* BTUH* | | | | | | | | |
|---|---|---|---|---|---|---|---|---|---|---|
| | | Uninsulated | | | 3/8-in. Insulation | | | 1/2-in. Insulation | | |
| | Pipe Dia. mm | 64 | 76 | 102 | 64 | 76 | 102 | 64 | 76 | 102 |
| | -7 | 1.5 | 16.7 | 15.2 | 1.5 | 19.8 | 32.0 | 1.5 | 19.8 | 38.1 |
| | -18 | 1.5 | 7.6 | 4.6 | 1.5 | 19.8 | 15.2 | 1.5 | 19.8 | 18.3 |
| | -29 | 1.5 | 3.0 | 1.5 | 1.5 | 13.7 | 9.1 | 1.5 | 15.2 | 12.2 |
| | -40 | 1.5 | 1.5 | | 1.5 | 9.1 | 6.1 | 1.5 | 35 | 7.6 |

*. Not all model families have this size.

## MAXIMUM EQUIVALENT VENT LENGTH - Ft. (M)

**NOTE:** Maximum Equivalent Vent Length (MEVL) includes standard and concentric vent termination and does NOT include elbows. Use Deductions from Maximum Equivalent Vent Length to determine allowable vent length for each application.

| Unit Size | | 26,000 [2] | | 40,000 [1] | | | 60,000 [2] | | | | 80,000 | | | | | 100,000 [3] | | | | 120,000 | | | 140,000 [3] | | |
|---|---|---|---|---|---|---|---|---|---|---|---|---|---|---|---|---|---|---|---|---|---|---|---|---|---|
| Altitude (feet) | Pipe Dia. (in) | 1 ½ | 2 | 1 ½ | 2 | 2 ½ | 1 ½ | 2 | 2 ½ | 3 | 1 ½ | 2 | 2 ½ | 3 | 4 | 2 | 2 ½ | 3 | 4 | 2 ½ | 3 | 4 | 2 ½ | 3 | 4 |
| | 0-2000 | 70 | 200 | 40 | 155 | 185 | 20 | 100 | 175 | 200 | 15 | 55 | 130 | 175 | 200 | 20 | 80 | 175 | 200 | 10 | 75 | 185 | 5 | 65 | 155 |
| | 2001-3000 | 65 | 190 | 35 | 150 | 175 | | 95 | 165 | 185 | 10 | 49 | 125 | 165 | 185 | 15 | 75 | 165 | 185 | | 70 | 175 | N/A | 60 | 140 |
| | 3001-4000 | 60 | 175 | 30 | 135 | 160 | 16 | 90 | 155 | 175 | | | 115 | 155 | 175 | | | 155 | 175 | 5 | 65 | 165 | | | 120 |
| | 4001-4500 | 55 | 160 | 25 | 130 | 155 | 15 | 85 | 150 | 170 | | 44 | 110 | 150 | 165 | 10 | 70 | | 170 | N/A | 60 | 160 | | 50 | 110 |
| | 4501-5000 | | | | 125 | 145 | | 80 | 145 | 165 | | | | 145 | 160 | | 65 | 150 | 165 | | | | | 45 | 100 |
| | 5001-6000 | 50 | 145 | 20 | 120 | 130 | | 75 | 140 | 155 | | 41 | 100 | 135 | 150 | | | 140 | 155 | | | 155 | | 35 | 80 |
| | 6001-7000 | 45 | 135 | 15 | 110 | 120 | 13 | 70 | 130 | 145 | N/A | 38 | 90 | 125 | 140 | | 60 | 135 | 145 | | 50 | 140 | | 30 | 65 |
| | 7001-8000 | 40 | 120 | 10 | 100 | 110 | 10 | 65 | 120 | 135 | | 36 | | 120 | 125 | N/A | 55 | 125 | 135 | | 46 | 130 | | 25 | 45 |
| | 8001-9000 | 35 | 110 | | 90 | 95 | 5 | 60 | 115 | 125 | | 33 | 80 | 110 | 115 | | 50 | 115 | 125 | | 43 | 120 | | 15 | 30 |
| | 9001-10000 | 30 | 95 | 5 | 80 | 85 | N/A | 55 | 105 | 115 | | 30 | 75 | 100 | 105 | | 45 | 100 | 115 | | 39 | 115 | | 10 | 15 |

**Maximum Equivalent Vent Length - Meters**

| Unit Size | | 26,000 [2] | | 40,000 [1] | | | 60,000 [2] | | | | 80,000 | | | | | 100,000 [3] | | | | 120,000 | | | 140,000 [3] | | |
|---|---|---|---|---|---|---|---|---|---|---|---|---|---|---|---|---|---|---|---|---|---|---|---|---|---|
| Altitude (meters) | Pipe Dia. (mm) | 38 | 51 | 38 | 51 | 64 | 38 | 51 | 64 | 76 | 38 | 51 | 64 | 76 | 102 | 51 | 64 | 76 | 102 | 64 | 76 | 102 | 64 | 76 | 102 |
| | 0-610 | 21.3 | 60.9 | 12.1 | 47.2 | 56.3 | 6.0 | 30.4 | 53.3 | 60.9 | 4.5 | 16.7 | 39.6 | 53.3 | 60.9 | 6.0 | 24.3 | 53.3 | 60.9 | 3.0 | 22.8 | 56.3 | 1.5 | 19.8 | 47.2 |
| | 611-914 | 19.8 | 57.9 | 10.6 | 45.7 | 53.3 | | 28.9 | 50.2 | 56.3 | 3.0 | 14.9 | 38.1 | 50.2 | 56.3 | 4.5 | 22.8 | 50.2 | 56.3 | | 21.3 | 53.3 | NA | 18.2 | 42.6 |
| | 915-1219 | 18.2 | 53.3 | 9.1 | 41.1 | 48.7 | 4.8 | 27.4 | 47.2 | 53.3 | | | 35.0 | 47.2 | 53.3 | | | 47.2 | 53.3 | 1.5 | 19.8 | 50.2 | | | 36.5 |
| | 1220-1370 | 16.7 | 48.7 | 7.6 | 39.6 | 47.2 | 4.5 | 25.9 | 45.7 | 51.8 | | 13.4 | 33.5 | 45.7 | 50.2 | 3.0 | 21.3 | | 51.8 | NA | 18.2 | 48.7 | | 15.2 | 33.5 |
| | 1371-1524 | | | | 38.1 | 44.1 | | 24.3 | 44.1 | 50.2 | | | | 44.1 | 48.7 | | 19.8 | 45.7 | 50.2 | | | | | 13.7 | 30.4 |
| | 1525-1829 | 15.2 | 44.1 | 6.0 | 36.5 | 39.6 | | 22.8 | 42.6 | 47.2 | | 12.4 | 30.4 | 41.1 | 45.7 | | | 42.6 | 47.2 | | | 47.2 | | 10.6 | 24.3 |
| | 1830-2134 | 13.7 | 41.1 | 4.5 | 33.5 | 36.5 | 3.9 | 21.3 | 39.6 | 44.1 | NA | 11.5 | 27.4 | 38.1 | 42.6 | NA | 18.2 | 41.1 | 44.1 | | 15.2 | 42.6 | | 9.1 | 19.8 |
| | 2135-2438 | 12.1 | 36.5 | 3.0 | 30.4 | 33.5 | 3.0 | 19.8 | 36.5 | 41.1 | | 10.9 | | 36.5 | 38.1 | | 16.7 | 38.1 | 41.1 | | 14.0 | 39.6 | | 7.6 | 13.7 |
| | 2439-2743 | 10.6 | 33.5 | | 27.4 | 28.9 | 1.5 | 18.2 | 35.0 | 38.1 | | 10.0 | 24.3 | 33.5 | 35.0 | | 15.2 | 35.0 | 38.1 | | 13.1 | 36.5 | | 4.5 | 9.1 |
| | 2744-3048 | 9.1 | 28.9 | 1.5 | 24.3 | 25.9 | NA | 16.7 | 32.0 | 35.0 | | 9.1 | 22.8 | 30.4 | 32.0 | | 13.7 | 30.4 | 35.0 | | 11.8 | 35.0 | | 3.0 | 4.5 |

1. 40K Inducer Outlet Restrictor disk (P/N 337683-401; 1.25-in. (32 mm) Dia.) shipped in the loose parts bag or available through Replacement Components required under 10-ft. (3 M) TEVL in all orientations. Required for installations from 0 - 2000 ft. (0 to 610 M) above sea level. Failure to use an outlet restrictor may result in flame disturbances or flame sense lock-out.
2. 26K (shipped in loose parts bag) & 60K Inducer Outlet Restrictor disk (P/N 337683-401; 1.25-in. (32 mm) Dia. available through Replacement Components) required for less than 5-ft. (1.5 M) TEVL in downflow and horizontal orientations only. Required for installations from 0 - 2000 ft. (0 to 610 M) above sea level.
3. 120K & 140K Inducer Outlet Restrictor disk (P/N 337683-402; 1.50-in. (38 mm) Dia. available through Replacement Components) required for less than 5-ft. (1.5 M) TEVL in downflow and horizontal orientations only. Required for installations from 0 - 2000 ft. (0 to 610 M) above sea level.

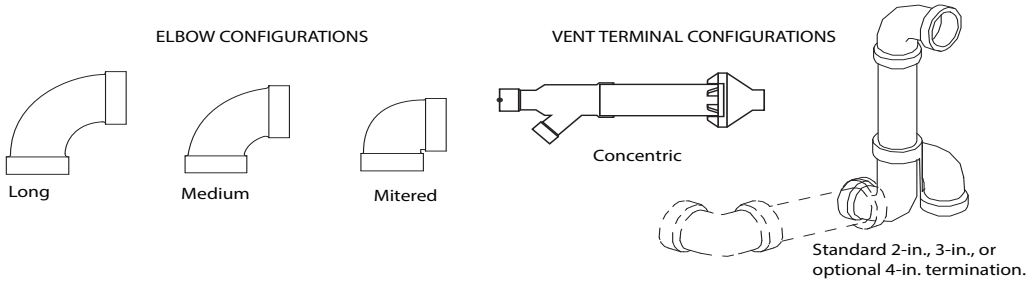


A13110

## Deductions from Maximum Equivalent Vent Length - Ft. (M)

| Pipe Diameter (in): | 1-1/2 | | 2 | | 2-1/2 | | 3 | | 4 | |
|---|---|---|---|---|---|---|---|---|---|---|
| Mitered 90º Elbow | 8 | (2.4) | 8 | (2.4) | 8 | (2.4) | 8 | (2.4) | 8 | (2.4) |
| Medium Radius 90º Elbow | 5 | (1.5) | 5 | (1.5) | 5 | (1.5) | 5 | (1.5) | 5 | (1.5) |
| Long Radius 90º Elbow | 3 | (0.9) | 3 | (0.9) | 3 | (0.9) | 3 | (0.9) | 3 | (0.9) |
| Mitered 45º Elbow | 4 | (1.2) | 4 | (1.2) | 4 | (1.2) | 4 | (1.2) | 4 | (1.2) |
| Medium Radius 45º Elbow | 2.5 | (0.8) | 2.5 | (0.8) | 2.5 | (0.8) | 2.5 | (0.8) | 2.5 | (0.8) |
| Long Radius 45º Elbow | 1.5 | (0.5) | 1.5 | (0.5) | 1.5 | (0.5) | 1.5 | (0.5) | 1.5 | (0.5) |
| Tee | 16 | (4.9) | 16 | (4.9) | 16 | (4.9) | 16 | (4.9) | 16 | (4.9) |
| Concentric Vent Termination | NA | | 0 | (0.0) | NA | | 0 | (0.0) | NA | |
| Standard Vent Termination | 0 | (0.0) | 0 | (0.0) | 0 | (0.0) | 0 | (0.0) | 0 | (0.0) |

**NOTE:**

1. Use only the smallest diameter pipe possible for venting. Over-sizing may cause flame disturbance or excessive vent terminal icing or freeze-up.
2. NA - Not allowed. Pressure switch will not close, or flame disturbance may result.
3. Vent sizing for Canadian installations over 4500 ft (1370 M) above sea level are subject to acceptance by local authorities having jurisdiction.
4. Size both the combustion air and vent pipe independently, then use the larger size for both pipes.
5. Assume the two 45° elbows equal one 90° elbow. Wide radius elbows are desirable and may be required in some cases.
6. Elbow and pipe sections within the furnace casing and at the vent termination should not be included in vent length or elbow count.
7. The minimum pipe length is 5 ft. (2 M) linear feet (meters) for all applications.
8. Use 3-in. (76 mm) diameter vent termination kit for installations requiring 4-in. (102 mm) diameter pipe

## Venting System Length Calculations

The Total Equivalent Vent Length (TEVL) for **EACH** combustion air or vent pipe equals the length of the venting system, plus the equivalent length of elbows used in the venting system from Deductions from Maximum Equivalent Vent Length - Ft. (M) Table.

Standard vent terminations or factory accessory concentric vent terminations count for zero deduction.

See vent system manufacturer's data for equivalent lengths of flexible vent pipe or other termination systems. **DO NOT ASSUME** that one foot of flexible vent pipe equals one foot of straight PVC/ABS DWV vent pipe.

Compare the Total Equivalent Vent Length to the Maximum Equivalent Vent Lengths in Maximum Equivalent Vent Length Table.

### Example 1

A direct-vent 60,000 BTUH furnace installed at 2100 ft. (640M). Venting system includes **FOR EACH PIPE:**
70 feet (22 M) of vent pipe, 65 feet (20 M) of combustion air inlet pipe, (3) 90º long-radius elbows, (2) 45º long-radius elbows, and a factory accessory concentric vent kit.

Can this application use 2" (50 mm ND) PVC/ABS DWV vent piping?

| | | | | | | |
|---|---|---|---|---|---|---|
| Measure the required linear length of air inlet and vent pipe; insert the longest of the two here | | | | | 70 ft. (22 M) | Use length of the longer of the vent or air inlet piping system |
| Add equiv length of (3) 90º long-radius elbows (use the highest number of elbows for either the vent or inlet pipe) | 3 | x | 3 ft. (0.9 M) | = | 9 ft. (2.7 M) | From Deductions from Maximum Equivalent Vent Length - Ft. (M) Table. |
| Add equiv length of (2) 45º long-radius elbows (use the highest number of elbows for either the vent or inlet pipe) | 2 | x | 1.5 ft. (0.5 M) | = | 3 ft. (0.9 M) | From Deductions from Maximum Equivalent Vent Length - Ft. (M) Table. |
| Add equiv length of factory concentric vent term | | | | | 0 ft. | From Deductions from Maximum Equivalent Vent Length - Ft. (M) Table. |
| Add correction for flexible vent pipe, if any | | | | | 0 ft. | From Vent Manufacturer's instructions; zero for PVC/ABS DWV |
| Total Equivalent Vent Length (TEVL) | | | | | 82 ft. (25 M) | Add all of the above lines |
| | | | | | | |
| Maximum Equivalent Vent Length (MEVL) | | | | | 95 ft. (29 M) | For 2" pipe from Maximum Equivalent Vent Length Table. |
| Is TEVL less than MEVL? | | | | | YES | Therefore, 2" pipe MAY be used |

### Example 2

A direct-vent 60,000 BTUH furnace installed at 2100 ft. (640M). Venting system includes **FOR EACH PIPE:**
100 feet (30 M) of vent pipe, 95 feet (29 M) of combustion air inlet pipe, (3) 90º long-radius elbows, and a polypropylene concentric vent kit. Also includes 20 feet (6.1 M) of flexible polypropylene vent pipe, included within the 100 feet (30 M) of vent pipe.

VERIFY FROM POLYPROPYLENE VENT MANUFACTURER'S INSTRUCTIONS for the multiplier correction for flexible vent pipe.

Can this application use 60mm o.d. (2") polypropylene vent piping? If not, what size piping can be used?

| | | | | | | |
|---|---|---|---|---|---|---|
| Measure the required linear length of **RIGID** air inlet and vent pipe; insert the longest of the two here: 100 ft. Of rigid pipe - 20 ft. Of flexible pipe | | | | = | 80 ft. (24 M) | Use length of the longer of the vent or air inlet piping system |
| Add equiv length of (3) 90º long-radius elbows (use the highest number of elbows for either the vent or inlet pipe) | 3 | x | 5 ft. (1.5 M) | = | 15 ft. (4.6 M) | Example from polypropylene vent manufacturer's instructions, Verify from vent manufacturer's instructions. |
| Add equiv length of 45º long-radius elbows (use the highest number of elbows for either the vent or inlet pipe) | 0 | x | | = | 0 ft. (0 M) | |
| Add equiv length of factory concentric vent term | 9 | x | 3.3 ft (0.9 M) | = | 30 ft. (9 M) | |
| Add correction for flexible vent pipe, if any | 2* | x | 20 ft. (6.1 M) | = | 40 ft. (12.2 M) | |
| * VERIFY FROM VENT MANUFACTURER'S INSTRUCTIONS; For example only, assume 1 meter of flexible 60mm (2") or 80mm (3") polypropylene pipe equals 2.0 meters (6.5 ft.) of PVC/ABS pipe. | | | | | | |
| Total Equivalent Vent Length (TEVL) | | | | | 165 ft. (50 M) | Add all of the above lines |
| | | | | | | |
| Maximum Equivalent Vent Length (MEVL) | | | | | 95 ft. (29 M) | For 2" pipe from Maximum Equivalent Vent Length Table. |
| Is TEVL less than MEVL? | | | | | NO | Therefore, 60mm (2") pipe may NOT be used; try 80mm (3") |
| | | | | | | |
| Maximum Equivalent Vent Length (MEVL) | | | | | 185 ft. (57 M) | For 3" pipe from Maximum Equivalent Vent Length Table. |
| Is TEVL less than MEVL? | | | | | YES | Therefore, 80mm (3") pipe MAY be used |

## RETURN AIR TEMPERATURE

This furnace is designed for continuous return-air minimum temperature of 60°F (15°C) db or intermittent operation down to 55°F (13°C) db such as when used with a night setback thermometer. Return-air temperature must not exceed 80°F (27°C) db. Failure to follow these return air limits may affect reliability of heat exchangers, motors and controls.

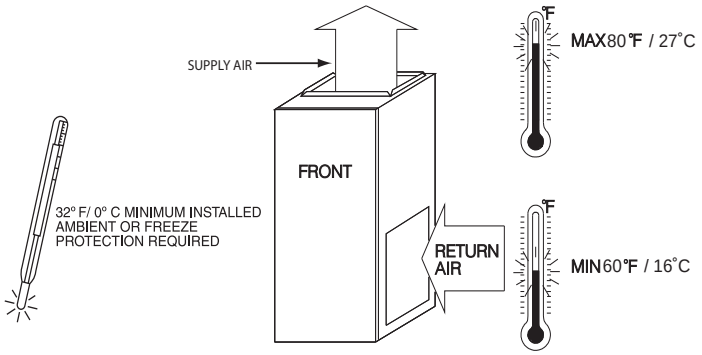


A10490

## MINIMUM CLEARANCES TO COMBUSTIBLE MATERIALS

| POSITION | CLEARANCE |
|---|---|
| Rear | 0 (0 mm) |
| Front (Combustion air openings in furnace and in structure) | 1 in. (25 mm) |
| Required for service* | 24 in. (610 mm)† |
| All Sides of Supply Plenum* | 1 in. (25 mm) |
| Sides | 0 (0 mm) |
| Vent | 0 (0 mm) |
| Top of Furnace | 1 in. (25 mm) |

*. Consult your local building codes
†. Recommended

## COMBUSTION-AIR PIPE FOR NON-DIRECT (1-PIPE) VENT APPLICATION

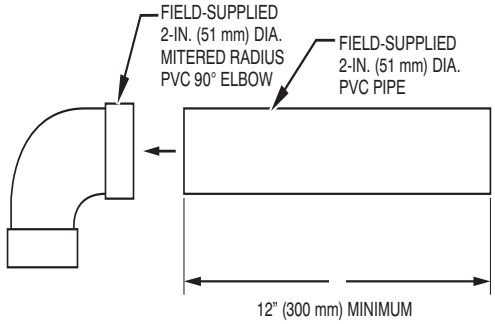


A12376

**NOTE:** See Installation Instructions for specific venting configurations.

## DOWNFLOW SUBBASE

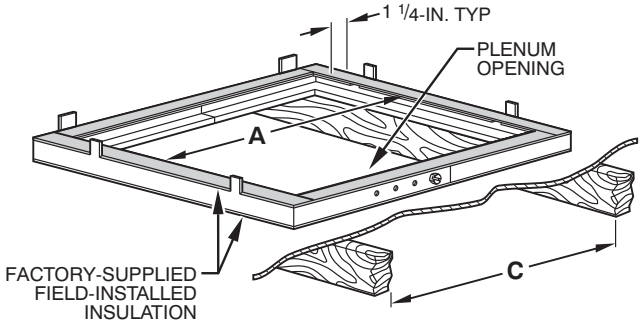


A97427

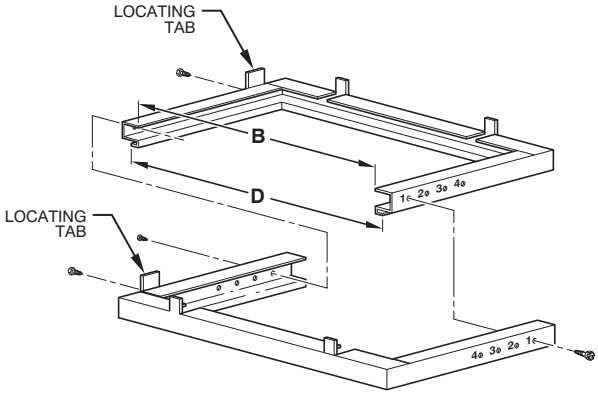


A88207

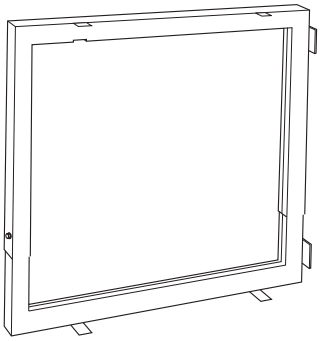

**Downflow Subbase**

A88202

One base fits all furnace sizes. The base is designed to be installed between the furnace and a combustible floor when no coil box is used or when a coil box other than a Carrier cased coil is used. It is CSA design certified for use with Carrier branded furnaces when installed in downflow applications.

| DIMENSIONS (IN. / MM) | | | | | | |
|---|---|---|---|---|---|---|
| FURNACE CASING WIDTH | FURNACE IN DOWNFLOW APPLICATION | PLENUM OPENING* | | FLOOR OPENING | | HOLE NO. FOR WIDTH ADJUSTMENT |
| | | A | B | C | D | |
| 14-3/16 (360) | Furnace with or without Cased Coil Assembly or Coil Box | 11-3/16 (322) | 19 (483) | 13-7/16 (341) | 20-5/8 (600) | 4 |
| 17-1/2 (445) | Furnace with or without Cased Coil Assembly or Coil Box | 15-1/8 (384) | 19 (483) | 16-3/4 (426) | 20-5/8 (600) | 3 |
| 21 (533) | Furnace with or without Cased Coil Assembly or Coil Box | 18-5/8 (396) | 19 (483) | 20-1/4 (514) | 20-5/8 (600) | 2 |
| 24-1/2 (622) | Furnace with or without Cased Coil Assembly or Coil Box | 22-1/8 (562) | 19 (483) | 23-3/4 (603) | 20-5/8 (600) | 1 |

*. The plenum should be constructed 1/4-in. (6 mm) smaller in width and depth than the plenum dimensions shown above.

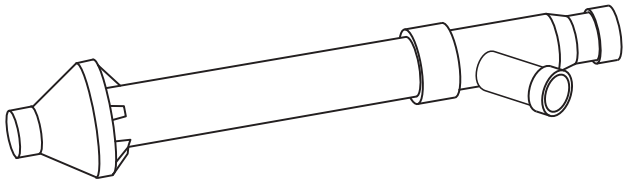

**Concentric Vent Kit**

A93086

A concentric vent kit allows vent and combustion-air pipes to terminate through a single exit in a roof or side wall. One pipe runs inside the other allowing venting through the inner pipe and combustion air to be drawn in through the outer pipe.

## MEDIA FILTER CABINET (OPTIONAL ACCESSORY)

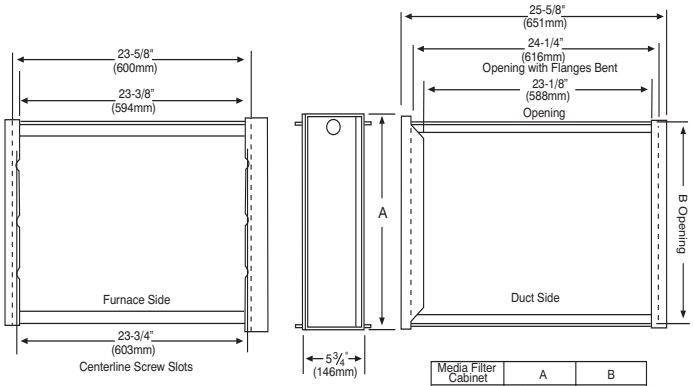


| Media Filter Cabinet | A | B |
|---|---|---|
| 16" (406mm) | 17" (432mm) | 16" (406mm) |
| 20" (508mm) | 21" (533mm) | 20" (508mm) |
| 24" (610mm) | 25" (635mm) | 24" (610mm) |

NOTE: Media cabinet is matched to the bottom opening on furnace. May also be used for side return.

A12428

## TYPICAL WIRING SCHEMATIC

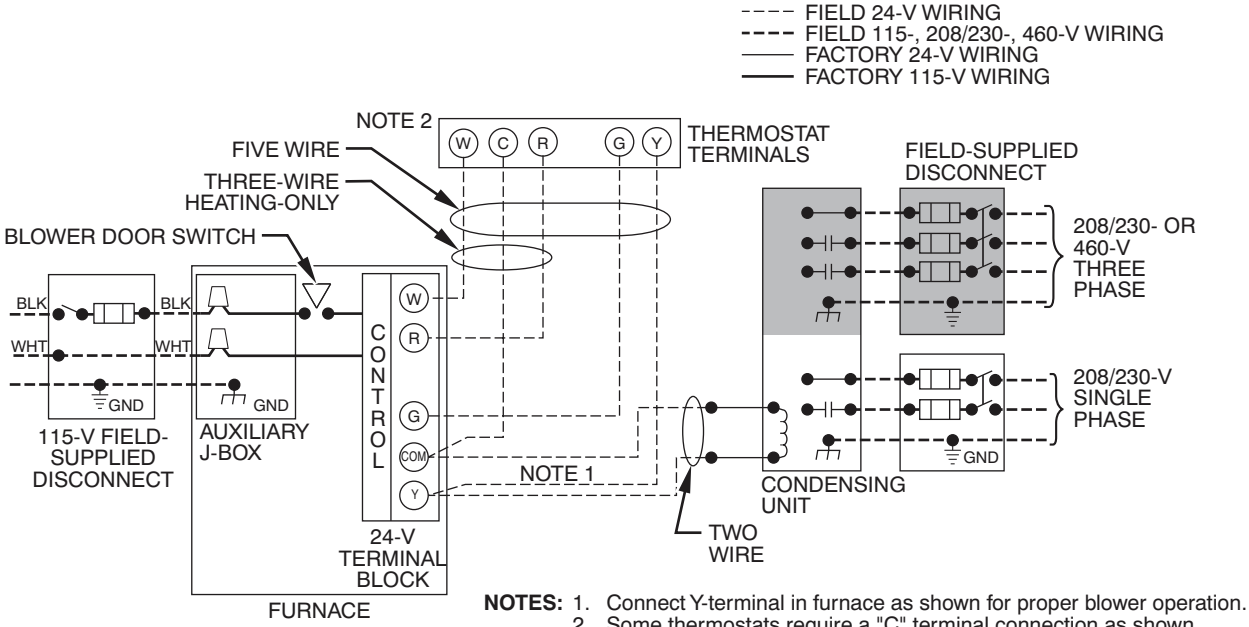


**NOTES:** 1. Connect Y-terminal in furnace as shown for proper blower operation.
2. Some thermostats require a "C" terminal connection as shown.
3. If any of the original wire, as supplied, must be replaced, use same type or equivalent wire.

A190079

# GUIDE SPECIFICATIONS

## General

### System Description

Furnish a _____ 4-way multipoise gas-fired condensing furnace for use with natural gas or propane (factory-authorized conversion kit required for propane).

### Quality Assurance

Unit will be designed, tested and constructed to the current ANSI Z 21.47/CSA 2.3 design standard for gas-fired central furnaces.

Unit will be third party certified by CSA to the current ANSI Z 21.47/CSA 2.3 design standard for gas-fired central furnaces. Unit will carry the CSA Blue Star® and Blue Flame® labels. Unit efficiency testing will be performed per the current DOE test procedure as listed in the Federal Register.

Unit will be certified for capacity and efficiency and listed in the latest AHRI Consumer's Directory of Certified Efficiency Ratings.

Unit will carry the current Federal Trade Commission Energy Guide efficiency label.

### Delivery, Storage, and Handling

Unit will be shipped as single package only and is stored and handled per unit manufacturer's recommendations.

### Warranty (for inclusion by specifying engineer)

U.S. and Canada only. Warranty certificate available upon request.

## Equipment

### Blower Wheel and ECM Blower Motor

Galvanized blower wheel shall be centrifugal type, statically and dynamically balanced. Blower motor of ECM type shall be permanently lubricated with sealed ball bearings, of _____hp, and have multiple speeds from 600-1200 RPM operating only when 24-VAC motor inputs are provided. Blower motor shall be direct drive and soft mounted to the blower housing to reduce vibration transmission.

### Filters

Furnace shall have reusable-type filters. Filter shall be _____ in. (mm) X _____ in. (mm). An accessory highly efficient Media Filter is available as an option. _____ Media Filter.

### Casing

Casing shall be of .030 in. thickness minimum, pre-painted steel.

### Draft Inducer Motor

Draft inducer motor shall be single-speed PSC design.

### Primary Heat Exchangers

Primary heat exchangers shall be 3-Pass corrosion-resistant aluminized steel of fold-and-crimp sectional design and applied operating under negative pressure.

### Secondary Heat Exchangers

Secondary heat exchangers shall be of a stainless steel flow-through of fin-and-tube design and applied operating under negative pressure.

## Controls

Controls shall include a micro-processor-based integrated electronic control board with at least 16 service troubleshooting codes displayed via diagnostic flashing LED light on the control, a self-test feature that checks all major functions of the furnace, and a replaceable automotive-type circuit protection fuse. Multiple operational settings available, including blower speeds for heating and cooling.

### Operating Characteristics

Heating capacity shall be _____ Btuh input; _____ Btuh output capacity.

Fuel Gas Efficiency shall be _____AFUE.

Air delivery shall be _____ cfm minimum at 0.50 in. W.C. external static pressure.

Dimensions shall be: depth_____in. (mm); width _____in. (mm); height_____in. (mm) (casing only). Height shall be_____in. (mm) with A/C coil and _____in. (mm) overall with plenum.

### Electrical Requirements

Electrical supply shall be 115 volts, 60 Hz, single-phase (nominal). Minimum wire size shall be _____AWG; maximum fuse size of HACR-type designated circuit breaker shall be _____ amps.

### Special Features

Refer to section of the product data identifying accessories and descriptions for specific features and available enhancements.

© 2025 Carrier. All rights reserved.


**Manufacturer reserves the right to change, at any time, specifications and designs without notice and without obligations.**