CH13NA 018−060
Single−Stage Heat Pump with Puron® Refrigerant

Carrier
turn to the experts™

Product Data

Carrier's CH13 has been designed utilizing Carrier's Puron refrigerant. The environmentally sound refrigerant allows you to make a responsible decision in the protection of the earth's ozone layer.

This product has been designed and manufactured to meet Energy Star® criteria for energy efficiency when matched with appropriate coil components. Refer to the combination ratings in the Product Data for system combinations that meet Energy Star® guidelines.

INDUSTRY LEADING FEATURES / BENEFITS

Efficiency

- 13 SEER / 10.5 - 11 EER (based on tested combination)
- Microtube Technology™ refrigeration system
- Energy Star® combinations

Reliability

- Puron® refrigerant - environmentally sound, won't deplete the ozone layer and low lifetime servce cost.
- Scroll compressor
- Internal pressure relief valve
- Internal thermal overload
- Filter drier

Durability

WeatherArmor™ protection package:

- Solid, durable sheet metal construction
- Dense wire coil guard

Applications

- Long-line - up to 250 feet (76.20 m) total equivalent length, up to 200 feet (60.96 m) condenser above evaporator, or up to 80 ft. (24.38 m) evaporator above condenser (See Longline Guide for more information.)
- Low ambient (down to -20°F/-28.9°C)) with accessory kit

NOTE: Ratings contained in this document are subject to change at any time. Always refer to the AHRI directory (www.ahridirectory.org) for the most up-to-date ratings information.

PRODUCT NUMBER NOMENCLATURE

CH13 N A 018 00G B A

13 SEER Heat Pump

Series

Variations

Electrical Supply
N – 208/230–60–1

00G – Variations

Nominal Capacity
018 – 1–1/2 Ton
024 – 2 Tons
025 – 2 Tons
030 – 2–1/2 Tons
031 – 2–1/2 Tons
036 – 3 Tons
042 – 3–1/2 Tons
048 – 4 Ton
060 – 5 Ton

A – Puron

Puron™
the environmentally sound refrigerant

AHRI CERTIFIED™ www.ahridirectory.org

Use of the AHRI Certified TM Mark indicates a manufacturer's participation in the program For verification of certification for individual products, go to www.ahridirectory.org.

c UL US

ENERGY STAR

This product has been designed and manufactured to meet Energy Star® criteria for energy efficiency when matched with appropriate coil components. However, proper refrigerant charge and proper air flow are critical to achieve rated capacity and efficiency. Installation of this product should follow all manufacturing refrigerant charging and air flow instructions. **Failure to confirm proper charge and air flow may reduce energy efficiency and shorten equipment life.**

A-WEIGHTED SOUND POWER (dBA)

UNIT SIZE – SERIES	Standard Rating (dBA)	TYPICAL OCTAVE BAND SPECTRUM (dBA without tone adjustment)						
		125	250	500	1000	2000	4000	8000
018–A	76	50.5	58.5	64.5	66.0	64.0	57.5	52.0
024–A	76	51.5	59.5	66.5	67.5	65.5	61.0	55.5
025–A	75	54.5	64.0	69.0	69.5	67.5	64.0	58.0
030–A	77	55.0	65.0	71.0	71.5	67.5	62.0	54.5
031–A	74	52.0	62.5	66.5	68.5	65.0	63.5	59.0
036–C	78	57.5	66.0	71.5	73.5	70.5	67.0	60.0
042–C	80	57.5	66.0	72.0	73.0	71.0	66.5	61.0
048–C	80	59.0	64.5	69.5	69.5	67.0	63.5	60.0
060–C	80	62.5	69.5	72.0	74.5	72.5	69.5	67.0

Note: Tested in accordance with AHRI standard 270–2008 (Not listed with AHRI)

METERING DEVICE

UNIT SIZE–SERIES	OUTDOOR PISTON	REQUIRED TXV SUBCOOLING °F (°C)	INDOOR METERING DEVICE
018–A	42	13 (7.2)	49
024–A	49	13 (7.2)	57
025–A	46	12 (6.7)	TXV*
030–A	55	9 (5.0)	67
031–A	55	13 (7.2)	TXV*
036–C	57	14 (7.5)	70
042–C	63	15 (8.0)	76
048–C	65	17 (9.0)	80
060–C	76	18 (10.0)	TXV*

* TXV must be ordered separately when indoor coil is not equipped with a TXV. TXV must be hard–shutoff type.

RECOMMENDED TUBE DIAMETERS

UNIT SIZE	LIQUID TUBE DIAMETER (In.)	VAPOR TUBE DIAMETER (In.)
018	3/8	5/8
024, 25, 030, 31		3/4
036, 042, 048		7/8
060		1–1/8

* For tube set over 80 ft / 24.38 m horizontal and/or 20 ft / 6.10 m vertical differential, consult Residential Split System Long Line Application Guidelines.

VAPOR LINE SIZING AND COOLING CAPACITY LOSS

Acceptable vapor line diameters provide adequate oil return to the compressor while avoiding excessive capacity loss. The suction line diameters shown in the chart below are acceptable for HP systems with Puron refrigerant:

Vapor Line Sizing and Cooling Capacity Losses - Puron® Refrigerant 1- Stage Heat Pump Applications

Unit Nominal Size (Btuh)	Maximum Liquid Line Diameters (In. OD)	Vapor Line Diameters (In.) OD	Cooling Capacity Loss (%) Total Equivalent Line Length ft. (m)								
			Standard Application		Long Line Application Requires Accessories						
			26–50 (7.9–15.2)	51–80 (15.5–24.4)	81–100 (24.7–30.5)	101–125 (30.8–38.1)	126–150 (38.4–45.7)	151–175 (46.0–50.3)	176–200 (53.6–60.0)	201–225 (61.3–68.6)	226–250 (68.9–76.2)
18,000 1–Stage HP with Puron	3/8	1/2	1	2	3	4	6	7	8	9	10
		5/8	0	0	1	1	1	2	2	3	3
24,000 / 25,000 1–Stage HP with Puron	3/8	5/8	0	1	1	2	3	3	4	4	5
		3/4	0	0	0	0	1	1	1	1	1
30,000 / 31,000 1–Stage HP with Puron	3/8	5/8	1	2	3	3	4	5	6	7	8
		3/4	0	0	1	1	1	2	2	2	3
		7/8	0	0	0	0	1	1	1	1	1
36,000 1–Stage HP with Puron	3/8	5/8	1	2	4	5	6	7	9	10	11
		3/4	0	0	1	1	2	2	3	3	4
		7/8	0	0	0	0	1	1	1	1	2
42,000 1–Stage HP with Puron	3/8	3/4	0	1	2	2	3	4	4	5	6
		7/8	0	0	1	1	1	2	2	2	3
48,000 1–Stage HP with Puron	3/8	3/4	0	1	2	3	4	5	5	6	7
		7/8	0	0	1	1	2	2	2	3	3
60,000 1–Stage HP with Puron	3/8	3/4	1	2	4	5	6	7	9	10	11
		7/8	0	1	2	2	3	4	4	5	5
		1–1/8	0	0	0	1	1	1	1	1	1

Standard Length = 80 ft. (24.4 m) or less total equivalent length

Applications in this area are long line. Accessories are required as shown recommended on Long Line Application Guidelines

Applications in this area may have height restrictions that limit allowable total equivalent length, when outdoor unit is below indoor unit See Long Line Application Guidelines

CH13NA

REFRIGERANT PIPING LENGTH LIMITATIONS

Maximum Line Lengths:

The maximum allowable total equivalent length for heat pumps varies depending on the vertical separation. See the tables below for allowable lengths depending on whether the outdoor unit is on the same level, above or below the outdoor unit.

Maximum Line Lengths for Heat Pump Applications

	MAXIMUM ACTUAL LENGTH ft (m)	MAXIMUM EQUIVALENT LENGTH† ft (m)	MAXIMUM VERTICAL SEPARATION ft (m)
Units on equal level	200 (61)	250 (76.2)	N/A
Outdoor unit ABOVE indoor unit	200 (61)	250 (76.2)	200 (61)
Outdoor unit BELOW indoor unit	See Table *'Maximum Total Equivalent Length: Outdoor Unit BELOW Indoor Unit'*		

† Total equivalent length accounts for losses due to elbows or fitting. See the Long Line Guideline for details.

CH13NA

Maximum Total Equivalent Length† - Outdoor Unit BELOW Indoor Unit

Size	Liquid Line Diameter w/ TXV	HP with Puron® Refrigerant – Maximum Total Equivalent Length† Vertical Separation ft (m) Outdoor unit BELOW indoor unit;						
		0–20 (0 – 6.1)	21–30 (6.4 – 9.1)	31–40 (9.4 – 12.2)	41–50 (12.5 – 15.2)	51–60 (15.5 – 18.3)	61–70 (18.6 – 21.3)	71–80 (21.6 – 24.4)
018 HP with Puron	3/8	250*	250*	250*	250*	250*	250*	250*
024, 025 HP with Puron	3/8	250*	250*	250*	250*	250*	250*	250*
030, 031 HP with Puron	3/8	250*	250*	250*	250*	250*	250*	250*
036 HP with Puron	3/8	250*	250*	250*	250*	250*	250*	250*
042 HP with Puron	3/8	250*	250*	250*	250*	250*	250*	150
048 HP with Puron	3/8	250*	250*	250*	250*	230	160	– –
060 HP with Puron	3/8	250*	225*	190	150	110	– –	– –

*** Maximum actual length not to exceed 200 ft (61 m)**

† Total equivalent length accounts for losses due to elbows or fitting. See the Long Line Guideline for details.

– – = outside acceptable range

LONG LINE APPLICATIONS

An application is considered Long Line when the refrigerant level in the system requires the use of accessories to maintain acceptable refrigerant management for systems reliability. Defining a system as long line depends on the liquid line diameter, actual length of the tubing, and vertical separation between the indoor and outdoor units.

For Heat Pump systems, the chart below shows when an application is considered Long Line. Beyond these lengths, long line accessories are required:

HP WITH PURON® REFRIGERANT LONG LINE DESCRIPTION ft (m)
Beyond these lengths, long line accessories are required

Liquid Line Size	Units On Same Level	Outdoor Below Indoor	Outdoor Above Indoor
3/8	80 (24.4)	20 (6.1) vertical or 80 (24.4) total	80 (24.4)

Note: See Long Line Guideline for details

SPECIFICATIONS

UNIT SIZE–SERIES	018–A	024–A	025–A	030–A	031–A	036–C	042–C	048–C	060–C
ELECTRICAL									
Unit Volts—Phase—Hertz	208/230—1—60								
Operating Voltage Range	197—253								
Unit Ampacity for Wire Sizing (MCA)	11.8	16.8	16.8	21.1	20.8	20.6	23.9	28.7	34.8
Min Wire Size (60°C/75°C Copper) (AWG)*	14	14	14	12	12	12	12	10	8
Maximum Length (60°C/75°C) (Ft)†	66/62	46/44	46/44	57/54	57/54	60/57	52/50	69/66	89/84
Max Branch Circuit Fuse Size (Amps)‡	20	25	25	30	30	35	40	45	50
Compressor Rated Load Amps	9.0	12.8	12.8	16.0	16.0	15.6	18.0	21.8	26.7
Locked Rotor Amps	48.0	58.3	58.3	77.0	77.0	70.0	96.0	99.0	120.0
Fan Motor HP and RPM	1/12 & 1100	1/10 & 1100	1/10 & 1100	1/5 & 1100	1/10 & 1100	1/5 & 1100	1/4 & 1100	1/4 & 1100	1/4 & 1100
Full Load Amps	0.5	0.8	0.8	1.1	1.1	1.1	1.4	1.4	1.4
COMPRESSOR AND REFRIGERANT									
Compressor Type	Scroll								
Refrigerant Charge lb (kg)	4.00 (1.81)	5.11 (2.33)	5.5 (2.49)	5.83 (2.64)	7.45 (3.38)	6.06 (2.75)	6.75 (3.06)	7.72 (3.50)	9.40 (4.26)
REFRIGERANT TUBES									
Rated Vapor***	5/8	3/4	3/4	3/4	3/4	7/8	7/8		1–1/8
Liquid	3/8								
OUTDOOR COIL AND FAN									
Coil Face Area (Sq Ft)	9.8	11.2	15.0	15.0	21.5	17.2	17.2	15.0	17.2
Rated Airflow (CFM)	1800	2100	2500	3000	2500	3000	3400	3400	3400
OPTIONAL EQUIPMENT									
Time–Delay Relay	KAATD0101TDR								
Outdoor Thermostat	KHAOT0301FST								
Secondary Outdoor Thermostat	KHAOT0201SEC								
Cycle Protector	KSACY0101AAA								
Crankcase Heater	KAACH1401AAA						KAACH1201AAA		
Compressor Start Assist—Capacitor/ Relay	KSAHS1501AAA								
Sound Hood	KSASH1801COP			KSASH0601COP					KSASH2101COP
TXV Kits (Hard Shutoff)	KSATX0201PUR					KSATX0301PUR		KSATX0401PUR	KSATX0501PUR
Low–Ambient Pressure Switch††	KSALA0301410								
MotorMaster® Low–Ambient Controller‡‡	KSALA0601AAA								
Ball Bearing Fan Motor	HC32GE234	HC34GE239				HC40GE226			
Liquid Line Filter Drier (RCD)	KH43LZ073								KH43LZ072
Evaporator Freeze Thermostat**	KAAFT0101AAA								
Isolation Relay**	KHAIR0101AAA								
Liquid Solenoid Valve	KHALS0401LLS								

N/A – Not applicable in this application.

* The ampacity of non–metallic (NM) sheathed cable shall be that of 60° C (140° F) conductors per NEC 2011, Article 336–26. If wire used is other than specified in chart, refer to applicable tables available in 2011 NEC. Copper wire must be used from disconnect to unit.

† Length shown is as measured 1 way along the wire path between the unit and the service panel for a voltage drop not to exceed 2%.

‡ Units may use fuses or circuit breakers (U.S. only).

** Consult low–ambient control Installation Instructions for application.

†† Isolation relay required.

‡‡ Required accessories include fan motor with ball bearings, crankcase heater, compressor start assist, evaporator freeze stat, isolation relay, hard shut–off TXV or liquid line solenoid valve.

*** Units are rated with 25 ft (7.6 m) of lineset length. See *Vapor Line Sizing and Cooling Capacity Loss* table when using other sizes and lengths of lineset.

ACCESSORY USAGE GUIDELINE

ACCESSORY	REQUIRED FOR LOWMBIENT COOLING APPLICATIONS (Below 55°F / 22.8°C)	REQUIRED FOR LONG LINE APPLICATIONS* (Over 80 Ft./24.4 m)	REQUIRED FOR SEA COAST APPLICATIONS (Within 2 miles/3.2 km)
Ball Bearing Fan Motor	Yes†	No	No
Compressor Start Assist Capacitor and Relay	Yes	Yes	No
Crankcase Heater	Yes	Yes	No
Evaporator Freeze Thermostat	Yes	No	No
Hard Shut–Off TXV	Yes	Yes	Yes
Liquid Line Solenoid Valve	No	See Long–Line Application Guideline	No
Low Ambient Kit (Pressure Switch)	Yes	No	No
Support Feet	Recommended	No	Recommended
Winter Start Control	Yes	No	No

* For tubing line sets between 80 and 200 ft. (24.4 and 76.2 m) and/or 20 ft. (6.1 m) vertical differential, refer to Residential Split–System Longline Application Guideline.

† Required for Low Ambient Controller (full modulation feature) and MotorMaster® Control only.

CH13NA

Accessory Description and Usage (Listed Alphabetically)

1. Compressor Start Assist - Capacitor and Relay

Start capacitor and relay gives a ”hard” boost to compressor motor at each start up.

Usage Guideline:

Required for reciprocating compressors in the following applications:

Long line

Low ambient cooling

Hard shut off expansion valve on indoor coil

Liquid line solenoid on indoor coil

Required for single-phase scroll compressors in the following applications:

Long line

Low ambient cooling

Suggested for all compressors in areas with a history of low voltage problems.

2. Compressor Start Assist — PTC Type

Solid state electrical device which gives a ”soft” boost to the compressor at each start-up.

Usage Guideline:

Suggested in installations with marginal power supply.

3. Crankcase Heater

An electric resistance heater which mounts to the base of the compressor to keep the lubricant warm during off cycles. Improves compressor lubrication on restart and minimizes the chance of liquid slugging.

Usage Guideline:

Required in low ambient cooling applications.

Required in long line applications.

4. Cycle Protector

The cycle protector is designed to prevent compressor short cycling. This control provides an approximate 5-minute delay after power to the compressor has been interrupted for any reason, including power outage, protector control trip, thermostat jiggling, or normal cycling.

Suggested in all commercial applications.

5. Evaporator Freeze Thermostat

An SPST temperature actuated switch that stops unit operation when evaporator reaches freeze-up conditions.

Usage Guideline:

Required when low ambient kit has been added.

6. Low Ambient Pressure Switch Kit

A long life pressure switch which is mounted to outdoor unit service valve. It is designed to cycle the outdoor fan motor in order to maintain head pressure within normal operating limits (approximately 100 psig to 225 psig). The control will maintain working head pressure at low ambient temperatures down to 0°F/-17.8°C when properly installed.

Usage Guideline:

A Low Ambient Pressure Switch or MotorMaster® Low Ambient Controller must be used when cooling operation is used at outdoor temperatures below 55°F (12.8°C).

Suggested for all commercial applications.

7. Support Feet

Four stick-on plastic feet that raise the unit 4 in. (101.6 mm) above the mounting pad. This allows sand, dirt, and other debris to be flushed from the unit base, minimizing corrosion.

Usage Guideline:

Suggested in the following applications:

Coastal installations.

Windy areas or where debris is normally circulating.

Rooftop installations.

For improved sound ratings.

8. Thermostatic Expansion Valve (TXV)

A modulating flow-control valve which meters refrigerant liquid flow rate into the evaporator in response to the superheat of the refrigerant gas leaving the evaporator.

Kit includes valve, adapter tubes, and external equalizer tube. Hard shut off types are available.

NOTE: When using a hard shut off TXV with single phase reciprocating compressors, a Compressor Start Assist Capacitor and Relay is required.

Usage Guideline:

Required to achieve AHRI ratings in certain equipment combinations. Refer to combination ratings.

Hard shut off TXV or LLS required in air conditioner long line applications.

Required for use on all zoning systems.

9. Winter Start Control

This control is designed to alleviate nuisance opening of the low-pressure switch by bypassing it for the first 3 minutes of operation.

DIMENSIONS - ENGLISH

UNIT	SERIES	ELECTRICAL CHARACTERISTICS				A	B	C	D	E	F	G	K	L	M	N	P	OPERATING WEIGHT(LBS)	SHIPPING WEIGHT(LBS)	SHIPPING DIMENSIONS (L x W x H)
CH13NA018	A	X	O	O	O	23 1/8"	28 7/16"	3 3/4"	5/8"	4 7/16"	18 1/16"	7 13/16"	2 13/16"	1/2"	11 1/2"	10 1/2"	11 1/2"	119	137	24 1/8" X 24 1/8" X 30 5/8"
CH13NA024	A	X	O	O	O	23 1/8"	31 13/16"	3 3/4"	3/4"	4 7/16"	18 1/16"	7 13/16"	2 13/16"	1/2"	11 1/2"	10 1/2"	12 1/2"	124	142	24 1/8" X 24 1/8" X 34"
CH13NA030	A	X	O	O	O	31 3/16"	28 7/16"	3 3/4"	3/4"	6 9/16"	24 11/16"	9 1/8"	2 15/16"	5/8"	15"	15"	11 1/2"	149	170	32 3/16" X 32 3/16" X 30 5/8"
CH13NA036	C	X	O	O	O	31 3/16"	31 13/16"	3 7/8"	7/8"	6 9/16"	24 11/16"	9 1/8"	2 15/16"	5/8"	15"	15"	12 1/2""	169	178	32 3/16" X 32 3/16" X 34"
CH13NA042	C	X	O	O	O	31 3/16"	31 13/16"	3 7/8"	7/8"	6 9/16"	24 11/16"	9 1/8"	2 15/16"	5/8"	15"	15"	12 1/2"	186	204	32 3/16" X 32 3/16" X 34"
CH13NA048	C	X	O	O	O	31 3/16"	28 7/16"	3 7/8"	7/8"	6 9/16"	24 11/16"	9 1/8"	2 15/16"	5/8"	15"	15"	11 1/2"	208	228	32 3/16" X 32 3/16" X 30 5/8"
CH13NA060	C	X	O	O	O	31 3/16"	31 13/16"	3 7/8"	7/8"	6 9/16"	24 11/16"	9 1/8"	2 15/16"	5/8"	15"	15"	12 1/2"	228	252	32 3/16" X 32 3/16" X 34"
		208-230-1-60	230-1-60	208/230-3-60	460-3-60															

X = YES
O = NO

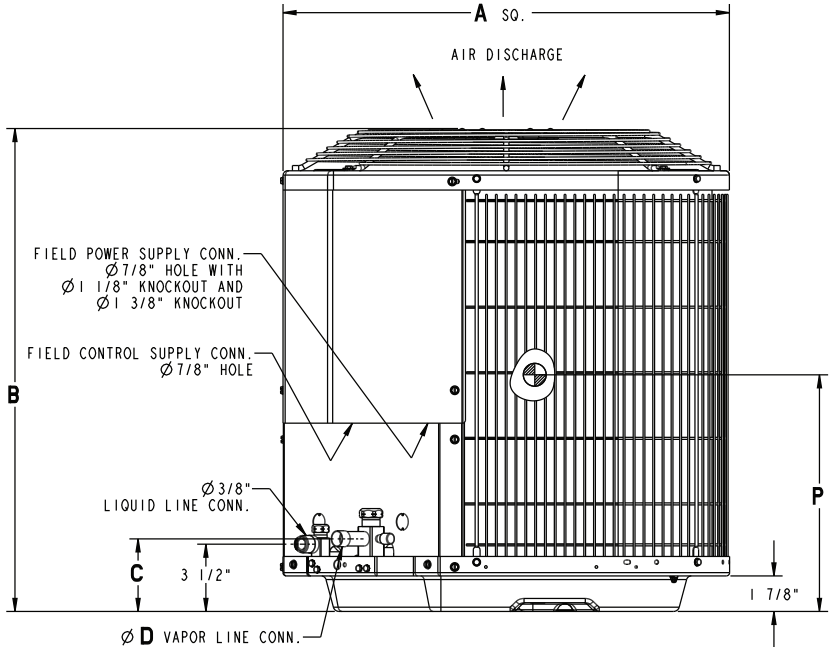

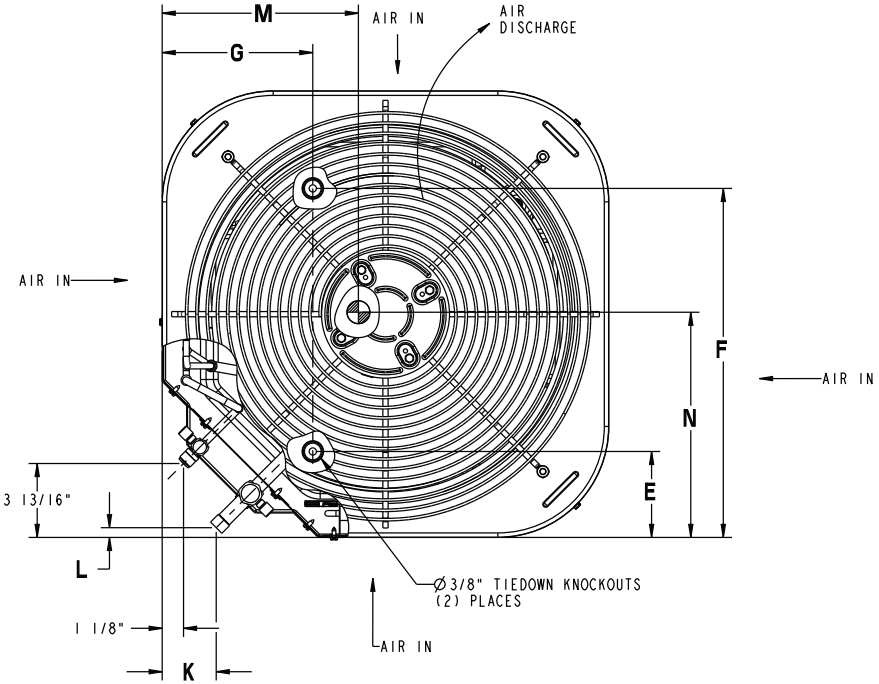

UNIT SIZE	MINIMUM MOUNTING PAD DIMENSIONS
18,24	23 1/2" X 23 1/2"
--	26" X 26"
30,36,42,48,60	31 1/2" X 31 1/2"
--	35" X 35"

DIMENSIONS - SI

UNIT	SERIES	ELECTRICAL CHARACTERISTICS				A	B	C	D	E	F	G	K	L	M	N	P	OPERATING WEIGHT(Kgs)	SHIPPING WEIGHT(Kgs)	SHIPPING DIMENSIONS (L x W x H)
CH13NA018	A	X	O	O	O	587.4	722.3	95.2	15.9	112.7	458.8	198.4	71.4	12.7	292.1	266.7	292.1	54.1	62.3	612.8 X 612.8 X 777.9
CH13NA024	A	X	O	O	O	587.4	808.0	95.2	19.0	112.7	458.8	198.4	71.4	12.7	292.1	266.7	317.5	56.4	64.5	612.8 X 612.8 X 863.6
CH13NA030	A	X	O	O	O	792.2	722.3	95.2	19.0	166.7	627.1	231.8	74.6	15.9	381.0	381.0	292.1	67.7	77.3	817.6 X 817.6 X 777.9
CH13NA036	C	X	O	O	O	792.2	808.0	98.4	22.2	166.7	627.1	231.8	74.6	15.9	381.0	381.0	317.5	76.7	80.9	817.6 X 817.6 X 863.6
CH13NA042	C	X	O	O	O	792.2	808.0	98.4	22.2	166.7	627.1	231.8	74.6	15.9	381.0	381.0	317.5	84.5	92.7	817.6 X 817.6 X 863.6
CH13NA048	C	X	O	O	O	792.2	722.3	98.4	22.2	166.7	627.1	231.8	74.6	15.9	381.0	381.0	292.1	94.5	103.6	817.6 X 817.6 X 777.9
CH13NA060	C	X	O	O	O	792.2	808.0	98.4	22.2	166.7	627.1	231.8	74.6	15.9	381.0	381.0	317.5	103.6	114.5	817.6 X 817.6 X 863.6
		208-230-1-60	230-1-60	208/230-3-60	460-3-60															

X = YES
O = NO

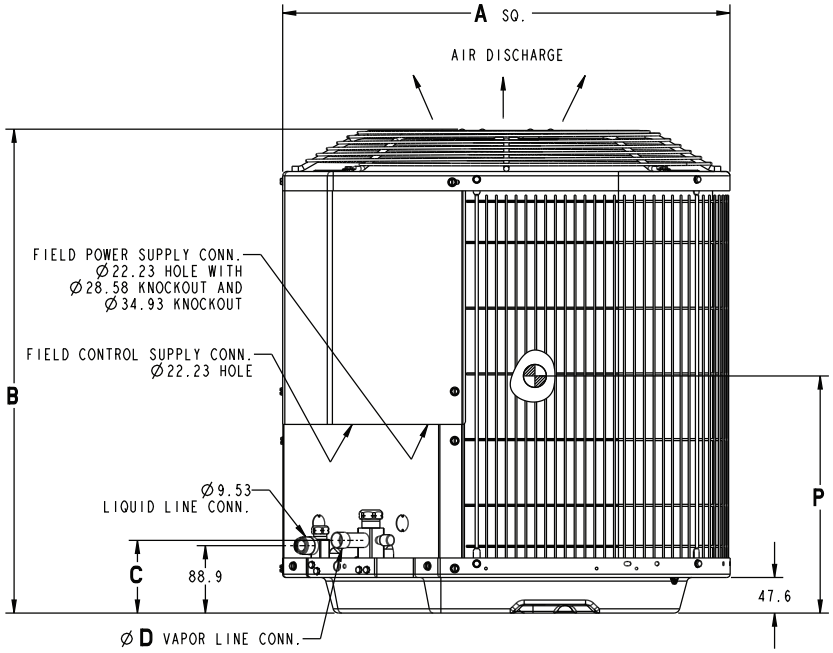

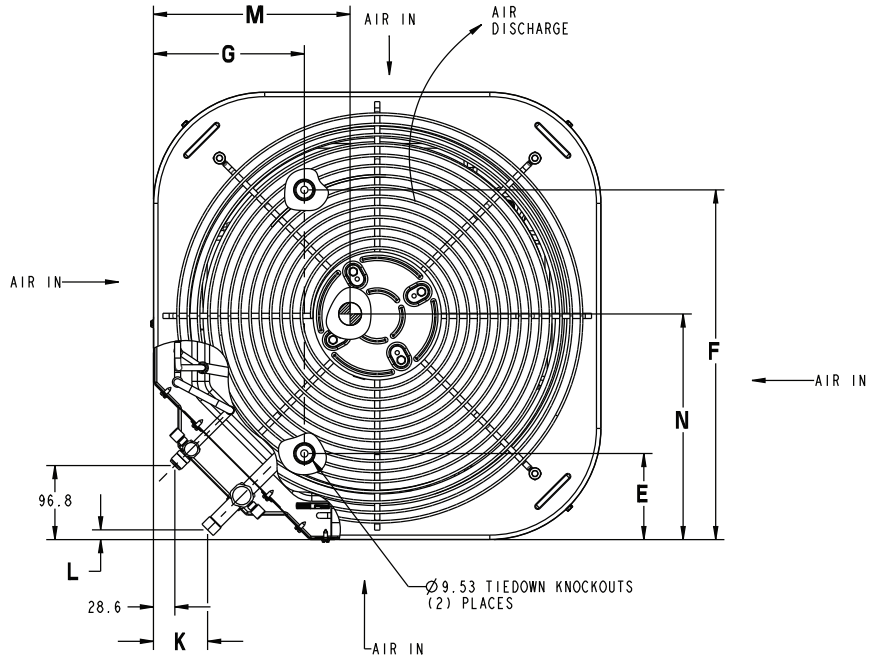

UNIT SIZE	MINIMUM MOUNTING PAD DIMENSIONS
18,24	596.9 X 596.9
--	660.4 X 660.4
30,36,42,48,60	800.1 X 800.1
--	889.0 X 889.0

CLEARANCES

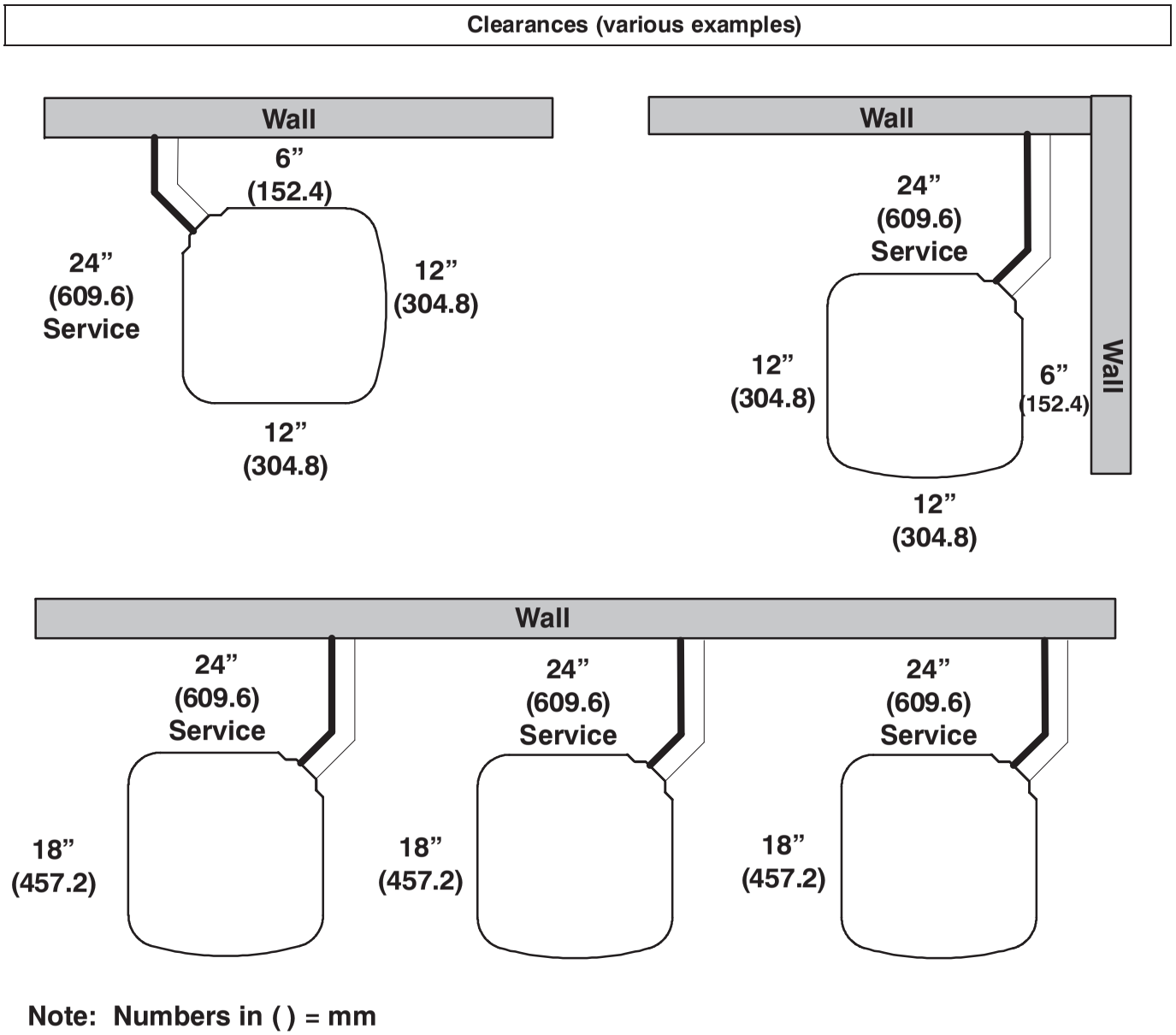

Note: Numbers in ( ) = mm

IMPORTANT: When installing multiple units in an alcove, roof well, or partially enclosed area, ensure there is adequate ventilation to prevent re-circulation of discharge air.

TESTED AHRI COMBINATION RATINGS*

NOTE: Ratings contained in this document are subject to change at any time.

For AHRI ratings certificates, please refer to the AHRI directory www.ahridirectory.org
Additional ratings and system combinations can be accessed via the Carrier database at:
http://cactaxcredits.info/carrier-ratings/ac_ratings_srch.php

Equipment performance Calculator can be accessed at: http://rpmob.wrightsoft.com/

Model Number	Coil Model Number	Furnace Model Number	Cooling Capacity	EER	SEER	High Temp		HSPF	Low Temp	
						Capacity 47°F (8°C)	COP		Capacity 17°F (−8°C)	COP
CH13NA018****A	FB4CNF018		17,400	11.0	13.0	16,800	3.60	7.7	9,400	2.24
CH13NA024****A	FB4CNF024		23,400	11.0	13.0	22,000	3.48	7.7	13,000	2.28
CH13NA025****A	FF1ENP024		22,400	10.7	13.0	23,800	3.50	8.0	14,800	2.46
CH13NA030****A	FB4CNF030		28,600	11.0	13.0	28,600	3.50	7.7	17,700	2.34
CH13NA031****A	FF1ENP030		29,400	10.5	13.0	30,000	3.32	7.7	18,300	2.32
CH13NA036****C	FB4CNF036		33,600	11.0	13.0	33,400	3.50	7.7	20,200	2.40
CH13NA042****C	FB4CNF042		41,500	11.0	13.0	39,000	3.60	8.0	24,400	2.40
CH13NA048****C	FB4CNF048		47,000	11.0	13.0	45,000	3.48	8.0	28,600	2.44
CH13NA060****C	FX4DN(B,F)061		57,500	11.0	13.0	55,000	3.64	8.0	35,400	2.56

* AHRI ratings are net values reflecting the effects of circulating fan heat. Supplemental electric heat is not included. Ratings are based on:
Cooling Standard: 80°F (27°C) db 67°F (19°C) wb indoor entering air temperature and 95°F (35°C) db air entering outdoor unit.
High−Temp Heating Standard: 70°F (21°C) db indoor entering air temperature and 47°F (8°C) db 43°F (6°C) wb air entering outdoor unit.
Low−Temp Heating Standard: 70°F (21°C) db indoor entering air temperature and 17°F (−8°C) db 15°F (−9°C) wb air entering outdoor unit.
COP — Coefficient of Performance
EER — Energy Efficiency Ratio
HSPF — Heating Seasonal Performance Factor
SEER — Seasonal Energy Efficiency Ratio

DETAILED COOLING CAPACITIES*

EVAPORATOR AIR		CONDENSER ENTERING AIR TEMPERATURES °F (°C)														
		75 (23.9)			85 (29.4)			95 (35)			105 (40.6)			115 (46.1)		
CFM	EWB °F (°C)	Capacity MBtuh		Total Sys. KW**	Capacity MBtuh		Total Sys. KW**	Capacity MBtuh		Total Sys. KW**	Capacity MBtuh		Total Sys. KW**	Capacity MBtuh		Total Sys. KW**
		Total†	Sens‡		Total†	Sens‡		Total†	Sens‡		Total†	Sens‡		Total†	Sens‡	
CH13NA018 – A Outdoor Section With FB4CNF018 Indoor Section																
525	57 (13.9)	16.28	16.28	1.22	15.63	15.63	1.37	14.93	14.93	1.54	14.17	14.17	1.74	13.36	13.36	1.96
	62 (16.7)	16.88	15.29	1.22	16.06	14.88	1.37	15.19	14.44	1.55	14.27	13.96	1.74	13.36	13.36	1.96
	67 (19.4)	18.54	12.90	1.23	17.64	12.51	1.38	16.69	12.10	1.56	15.67	11.67	1.75	14.58	11.22	1.97
	72 (22.2)	20.35	10.48	1.23	19.38	10.11	1.40	18.35	9.71	1.57	17.26	9.30	1.77	16.09	8.86	1.99
600	57 (13.9)	16.97	16.97	1.23	16.27	16.27	1.39	15.53	15.53	1.56	14.73	14.73	1.76	13.87	13.87	1.98
	62 (16.7)	17.28	16.37	1.23	16.44	15.93	1.39	15.56	15.49	1.56	14.73	14.73	1.76	13.87	13.87	1.98
	67 (19.4)	18.93	13.71	1.24	17.99	13.31	1.40	17.00	12.90	1.57	15.95	12.46	1.77	14.82	12.00	1.99
	72 (22.2)	20.76	10.99	1.25	19.75	10.60	1.41	18.68	10.21	1.59	17.55	9.79	1.79	16.34	9.34	2.01
675	57 (13.9)	17.55	17.55	1.25	16.82	16.82	1.40	16.03	16.03	1.58	15.19	15.19	1.77	14.29	14.29	2.00
	62 (16.7)	17.64	17.34	1.25	16.82	16.82	1.40	16.03	16.03	1.58	15.19	15.19	1.77	14.29	14.29	2.00
	67 (19.4)	19.23	14.48	1.25	18.26	14.08	1.41	17.24	13.66	1.59	16.16	13.22	1.78	15.00	12.74	2.00
	72 (22.2)	21.08	11.47	1.26	20.04	11.08	1.43	18.94	10.67	1.61	17.78	10.25	1.80	16.53	9.80	2.02

EVAPORATOR AIR		CONDENSER ENTERING AIR TEMPERATURES °F (°C)														
		75 (23.9)			85 (29.4)			95 (35)			105 (40.6)			115 (46.1)		
CFM	EWB °F (°C)	Capacity MBtuh		Total Sys. KW**	Capacity MBtuh		Total Sys. KW**	Capacity MBtuh		Total Sys. KW**	Capacity MBtuh		Total Sys. KW**	Capacity MBtuh		Total Sys. KW**
		Total†	Sens‡		Total†	Sens‡		Total†	Sens‡		Total†	Sens‡		Total†	Sens‡	
CH13NA024 – A Outdoor Section With FB4CNF024 Indoor Section																
700	57 (13.9)	21.35	21.35	1.64	20.55	20.55	1.84	19.67	19.67	2.07	18.70	18.70	2.32	17.62	17.62	2.60
	62 (16.7)	22.17	20.15	1.65	21.17	19.64	1.85	20.08	19.09	2.07	18.90	18.47	2.32	17.63	17.63	2.60
	67 (19.4)	24.25	16.96	1.67	23.18	16.49	1.87	22.01	15.99	2.09	20.73	15.44	2.34	19.30	14.84	2.62
	72 (22.2)	26.47	13.74	1.70	25.35	13.30	1.90	24.12	12.82	2.12	22.75	12.30	2.37	21.24	11.72	2.64
800	57 (13.9)	22.20	22.20	1.66	21.35	21.35	1.87	20.42	20.42	2.09	19.40	19.40	2.34	18.27	18.27	2.62
	62 (16.7)	22.66	21.51	1.67	21.63	20.97	1.87	20.54	20.35	2.09	19.40	19.40	2.34	18.27	18.27	2.62
	67 (19.4)	24.71	17.98	1.69	23.61	17.51	1.89	22.40	17.00	2.11	21.07	16.45	2.36	19.60	15.84	2.64
	72 (22.2)	26.95	14.36	1.73	25.79	13.91	1.93	24.52	13.43	2.15	23.11	12.90	2.39	21.54	12.32	2.67
900	57 (13.9)	22.90	22.90	1.69	22.01	22.01	1.89	21.05	21.05	2.12	19.99	19.99	2.37	18.80	18.80	2.65
	62 (16.7)	23.07	22.71	1.69	22.03	22.03	1.89	21.05	21.05	2.12	19.98	19.98	2.37	18.80	18.80	2.65
	67 (19.4)	25.06	18.95	1.72	23.93	18.47	1.92	22.69	17.96	2.14	21.33	17.40	2.38	19.82	16.77	2.66
	72 (22.2)	27.32	14.95	1.76	26.13	14.50	1.96	24.82	14.01	2.18	23.38	13.48	2.42	21.77	12.89	2.69

See notes on pg. 15

DETAILED COOLING CAPACITIES* (CONT.)

EVAPORATOR AIR		CONDENSER ENTERING AIR TEMPERATURES °F (°C)																	
		75 (23.9)			85 (29.4)			95 (35)			105 (40.6)			115 (46.1)			125 (51.7)		
CFM	EWB °F (°C)	Capacity MBtuh		Total System KW**	Capacity MBtuh		Total System KW**	Capacity MBtuh		Total System KW**	Capacity MBtuh		Total System KW**	Capacity MBtuh		Total System KW**	Capacity MBtuh		Total System KW**
		Total	Sens‡		Total	Sens‡		Total	Sens‡		Total	Sens‡		Total	Sens‡		Total	Sens‡	
CH13NA025–A Outdoor Section With HSVTC Indoor Section																			
700	72 (22.2)	26.97	13.80	1.66	25.72	13.32	1.86	24.41	12.81	2.09	23.03	12.29	2.34	21.54	11.73	2.61	19.91	11.13	2.91
	67 (19.4)	24.65	17.15	1.66	23.49	16.65	1.86	22.26	16.12	2.09	20.97	15.57	2.34	19.59	15.00	2.62	18.09	14.38	2.92
	63 (17.2)††	22.94	16.60	1.66	21.84	16.09	1.86	20.68	15.56	2.09	19.46	15.01	2.34	18.16	14.43	2.62	16.76	13.81	2.92
	62 (16.7)	22.50	20.46	1.66	21.42	19.93	1.86	20.30	19.36	2.09	19.14	18.75	2.34	17.96	17.96	2.62	16.82	16.82	2.92
	57 (13.9)	21.73	21.73	1.66	20.87	20.87	1.86	19.96	19.96	2.09	19.00	19.00	2.34	17.96	17.96	2.62	16.82	16.82	2.92
800	72 (22.2)	27.42	14.42	1.69	26.13	13.93	1.90	24.76	13.42	2.12	24.27	13.23	2.06	21.80	12.33	2.65	20.12	11.72	2.94
	67 (19.4)	25.09	18.20	1.69	23.88	17.68	1.90	22.60	17.15	2.12	21.27	16.60	2.37	19.84	16.01	2.65	18.29	15.38	2.95
	63 (17.2)††	23.37	17.58	1.69	22.22	17.07	1.90	21.02	16.52	2.13	19.76	15.96	2.38	18.41	15.37	2.65	16.96	14.73	2.95
	62 (16.7)	22.96	21.88	1.69	21.86	21.30	1.90	20.72	20.69	2.13	19.67	19.67	2.38	18.57	18.57	2.65	17.37	17.37	2.95
	57 (13.9)	22.57	22.57	1.69	21.66	21.66	1.90	20.70	20.70	2.13	19.67	19.67	2.38	18.57	18.57	2.65	17.37	17.37	2.95
900	72 (22.2)	27.75	15.01	1.73	26.42	14.51	1.93	26.10	14.39	1.86	24.55	13.82	2.09	22.87	13.22	2.36	20.25	12.28	2.98
	67 (19.4)	25.40	19.19	1.73	24.16	18.68	1.93	22.85	18.13	2.16	21.48	17.57	2.41	20.02	16.97	2.69	18.43	16.31	2.98
	63 (17.2)††	23.68	18.52	1.73	22.50	17.99	1.93	21.26	17.44	2.16	19.97	16.87	2.41	18.59	16.26	2.69	17.11	15.60	2.99
	62 (16.7)	23.36	23.12	1.73	22.32	22.31	1.93	21.30	21.30	2.16	20.23	20.23	2.41	19.07	19.07	2.69	17.81	17.81	2.99
	57 (13.9)	23.27	23.27	1.73	22.31	22.31	1.93	21.30	21.30	2.16	20.23	20.23	2.41	19.07	19.07	2.69	17.81	17.81	2.99

EVAPORATOR AIR		CONDENSER ENTERING AIR TEMPERATURES °F (°C)														
		75 (23.9)			85 (29.4)			95 (35)			105 (40.6)			115 (46.1)		
CFM	EWB °F (°C)	Capacity MBtuh		Total Sys. KW**	Capacity MBtuh		Total Sys. KW**	Capacity MBtuh		Total Sys. KW**	Capacity MBtuh		Total Sys. KW**	Capacity MBtuh		Total Sys. KW**
		Total†	Sens‡		Total†	Sens‡		Total†	Sens‡		Total†	Sens‡		Total†	Sens‡	
CH13NA030–A Outdoor Section With FB4CNF030 Indoor Section																
875	57 (13.9)	27.59	27.59	2.14	26.52	26.52	2.39	25.38	25.38	2.66	24.13	24.13	2.98	22.76	22.76	3.34
	62 (16.7)	28.63	26.25	2.15	27.31	25.58	2.39	25.90	24.85	2.67	24.40	24.05	2.98	22.77	22.77	3.34
	67 (19.4)	31.16	22.04	2.17	29.71	21.40	2.42	28.17	20.72	2.69	26.51	20.00	3.00	24.70	19.23	3.36
	72 (22.2)	33.88	17.79	2.19	32.31	17.17	2.45	30.64	16.51	2.72	28.85	15.81	3.03	26.88	15.06	3.39
1000	57 (13.9)	28.61	28.61	2.18	27.48	27.48	2.42	26.26	26.26	2.70	24.94	24.94	3.01	23.49	23.49	3.38
	62 (16.7)	29.21	27.99	2.18	27.84	27.27	2.43	26.42	26.46	2.70	24.94	24.94	3.02	23.48	23.48	3.38
	67 (19.4)	31.71	23.34	2.20	30.20	22.68	2.45	28.60	22.00	2.72	26.88	21.27	3.04	25.00	20.48	3.39
	72 (22.2)	34.46	18.58	2.23	32.81	17.94	2.48	31.09	17.28	2.75	29.23	16.57	3.06	27.20	15.81	3.42
1125	57 (13.9)	29.46	29.46	2.21	28.26	28.26	2.46	26.99	26.99	2.73	25.60	25.60	3.05	24.08	24.08	3.41
	62 (16.7)	29.70	29.56	2.21	28.30	28.30	2.46	26.99	26.99	2.73	25.60	25.60	3.05	24.07	24.07	3.41
	67 (19.4)	32.14	24.60	2.23	30.57	23.93	2.48	28.93	23.24	2.76	27.16	22.49	3.07	25.24	21.68	3.42
	72 (22.2)	34.90	19.33	2.26	33.21	18.69	2.51	31.43	18.02	2.79	29.52	17.30	3.10	27.44	16.53	3.45

See notes on pg. 15

DETAILED COOLING CAPACITIES* (CONT.)

EVAPORATOR AIR		CONDENSER ENTERING AIR TEMPERATURES °F (°C)																	
		75 (23.9)			85 (29.4)			95 (35)			105 (40.6)			115 (46.1)			125 (51.7)		
CFM	EWB °F (°C)	Capacity MBtuh		Total System KW**	Capacity MBtuh		Total System KW**	Capacity MBtuh		Total System KW**	Capacity MBtuh		Total System KW**	Capacity MBtuh		Total System KW**	Capacity MBtuh		Total System KW**
		Total	Sens‡		Total	Sens‡		Total	Sens‡		Total	Sens‡		Total	Sens‡		Total	Sens‡	
CH13NA031–A Outdoor Section With HSVTC Indoor Section																			
875	72 (22.2)	35.79	17.64	2.16	34.09	16.98	2.44	32.29	16.30	2.74	30.43	15.61	3.07	28.40	14.86	3.43	26.15	14.05	3.82
	67 (19.4)	32.75	21.77	2.16	31.19	21.11	2.43	29.54	20.42	2.73	27.82	19.70	3.07	25.96	18.94	3.43	23.92	18.12	3.83
	63 (17.2)††	30.50	21.10	2.15	29.04	20.44	2.43	27.50	19.74	2.73	25.89	19.02	3.07	24.15	18.26	3.43	22.26	17.45	3.83
	62 (16.7)	29.92	25.87	2.15	28.49	25.18	2.43	26.99	24.45	2.73	25.43	23.67	3.06	23.79	22.80	3.43	22.14	22.14	3.83
	57 (13.9)	28.64	28.64	2.15	27.51	27.51	2.42	26.31	26.31	2.73	25.04	25.04	3.07	23.66	23.66	3.43	22.14	22.14	3.83
1000	72 (22.2)	36.41	18.38	2.21	34.64	17.72	2.48	32.77	17.03	2.78	30.84	16.33	3.12	28.73	15.57	3.48	26.40	14.75	3.87
	67 (19.4)	33.35	23.03	2.20	31.72	22.36	2.48	30.00	21.65	2.78	28.22	20.92	3.11	26.27	20.15	3.47	24.17	19.31	3.87
	63 (17.2)††	31.09	22.29	2.20	29.56	21.61	2.47	27.96	20.90	2.78	26.27	20.17	3.11	24.47	19.39	3.47	22.52	18.55	3.87
	62 (16.7)	30.53	27.59	2.20	29.06	26.85	2.47	27.52	26.05	2.77	25.93	25.93	3.11	24.45	24.45	3.48	22.82	22.82	3.87
	57 (13.9)	29.74	29.74	2.20	28.54	28.54	2.47	27.26	27.26	2.77	25.91	25.91	3.11	24.45	24.45	3.48	22.83	22.83	3.87
1125	72 (22.2)	36.88	19.09	2.25	35.06	18.43	2.53	33.12	17.73	2.83	31.13	17.01	3.16	28.96	16.25	3.52	26.56	15.42	3.91
	67 (19.4)	33.80	24.25	2.25	32.12	23.56	2.52	30.34	22.85	2.82	28.49	22.10	3.16	26.51	21.31	3.52	24.34	20.44	3.91
	63 (17.2)††	31.54	23.44	2.24	29.96	22.75	2.52	28.30	22.03	2.82	26.56	21.28	3.15	24.71	20.48	3.52	22.71	19.60	3.92
	62 (16.7)	31.05	29.15	2.24	29.55	28.32	2.52	28.04	28.04	2.82	26.61	26.61	3.15	25.08	25.08	3.52	23.36	23.36	3.92
	57 (13.9)	30.66	30.66	2.24	29.39	29.39	2.52	28.04	28.04	2.82	26.62	26.62	3.15	25.08	25.08	3.52	23.37	23.37	3.92

EVAPORATOR AIR		CONDENSER ENTERING AIR TEMPERATURES °F (°C)														
		75 (23.9)			85 (29.4)			95 (35)			105 (40.6)			115 (46.1)		
CFM	EWB °F (°C)	Capacity MBtuh		Total Sys. KW**	Capacity MBtuh		Total Sys. KW**	Capacity MBtuh		Total Sys. KW**	Capacity MBtuh		Total Sys. KW**	Capacity MBtuh		Total Sys. KW**
		Total†	Sens‡		Total†	Sens‡		Total†	Sens‡		Total†	Sens‡		Total†	Sens‡	
CH13NA036–C Outdoor Section With FB4CNF036 Indoor Section																
1050	57 (13.9)	32.52	32.52	2.55	31.30	31.30	2.83	29.99	29.99	3.14	28.56	28.56	3.50	27.00	27.00	3.92
	62 (16.7)	33.65	32.04	2.56	32.15	31.25	2.83	30.54	30.39	3.14	28.82	29.42	3.50	27.01	27.01	3.92
	67 (19.4)	36.82	26.93	2.58	35.20	26.19	2.85	33.45	25.41	3.17	31.56	24.57	3.52	29.49	23.67	3.93
	72 (22.2)	40.26	21.75	2.60	38.53	21.04	2.88	36.67	20.30	3.19	34.65	19.49	3.55	32.44	18.62	3.95
1200	57 (13.9)	33.76	33.76	2.60	32.48	32.48	2.87	31.10	31.10	3.19	29.59	29.59	3.54	27.95	27.95	3.96
	62 (16.7)	34.37	34.18	2.60	32.83	33.32	2.88	31.21	30.92	3.19	29.59	29.59	3.54	27.95	27.95	3.96
	67 (19.4)	37.50	28.54	2.62	35.81	27.79	2.90	34.00	27.00	3.21	32.04	26.15	3.56	29.91	25.23	3.97
	72 (22.2)	40.96	22.73	2.65	39.18	22.01	2.93	37.25	21.25	3.24	35.16	20.44	3.59	32.88	19.56	3.99
1350	57 (13.9)	34.80	34.80	2.64	33.45	33.45	2.92	32.01	32.01	3.23	30.44	30.44	3.59	28.73	28.73	4.00
	62 (16.7)	35.00	36.06	2.64	33.47	33.47	2.92	32.01	32.01	3.23	30.44	30.44	3.59	28.72	28.72	4.00
	67 (19.4)	38.03	30.11	2.66	36.29	29.35	2.94	34.43	28.55	3.25	32.42	27.68	3.60	30.24	26.73	4.01
	72 (22.2)	41.51	23.67	2.69	39.68	22.95	2.97	37.69	22.18	3.28	35.55	21.36	3.63	33.21	20.47	4.04

See notes on pg. 15

DETAILED COOLING CAPACITIES* (CONT.)

EVAPORATOR AIR		CONDENSER ENTERING AIR TEMPERATURES °F (°C)														
		75 (23.9)			85 (29.4)			95 (35)			105 (40.6)			115 (46.1)		
CFM	EWB °F (°C)	Capacity MBtuh Total†	Capacity MBtuh Sens‡	Total Sys. KW**	Capacity MBtuh Total†	Capacity MBtuh Sens‡	Total Sys. KW**	Capacity MBtuh Total†	Capacity MBtuh Sens‡	Total Sys. KW**	Capacity MBtuh Total†	Capacity MBtuh Sens‡	Total Sys. KW**	Capacity MBtuh Total†	Capacity MBtuh Sens‡	Total Sys. KW**
CH13NA042–C Outdoor Section With FB4CNF042 Indoor Section																
1225	57 (13.9)	38.22	38.22	3.03	36.77	36.77	3.37	35.23	35.23	3.74	33.60	33.60	4.14	31.84	31.84	4.60
	62 (16.7)	39.66	35.89	3.02	37.84	34.98	3.37	35.94	34.02	3.74	33.96	32.99	4.15	31.87	31.87	4.60
	67 (19.4)	43.44	30.19	2.97	41.45	29.31	3.34	39.35	28.42	3.73	37.14	27.48	4.15	34.79	26.49	4.61
	72 (22.2)	47.61	24.46	2.89	45.44	23.60	3.29	43.16	22.72	3.71	40.76	21.81	4.15	38.20	20.84	4.62
1400	57 (13.9)	39.71	39.71	3.06	38.16	38.16	3.41	36.52	36.52	3.79	34.79	34.79	4.20	32.93	32.93	4.65
	62 (16.7)	40.51	38.33	3.05	38.63	37.34	3.41	36.70	36.25	3.79	34.79	34.79	4.20	32.92	32.92	4.65
	67 (19.4)	44.27	32.00	2.99	42.19	31.11	3.38	40.00	30.20	3.77	37.71	29.25	4.20	35.27	28.24	4.66
	72 (22.2)	48.52	25.57	2.91	46.24	24.70	3.32	43.87	23.80	3.74	41.38	22.87	4.19	38.72	21.89	4.67
1575	57 (13.9)	40.95	40.95	3.09	39.31	39.31	3.45	37.59	37.59	3.83	35.77	35.77	4.24	33.82	33.82	4.70
	62 (16.7)	41.24	40.48	3.09	39.34	39.34	3.45	37.59	37.59	3.83	35.77	35.77	4.24	33.81	33.81	4.70
	67 (19.4)	44.90	33.73	3.03	42.74	32.82	3.41	40.48	31.90	3.82	38.12	30.92	4.24	35.62	29.89	4.71
	72 (22.2)	49.20	26.61	2.94	46.85	25.73	3.36	44.40	24.82	3.78	41.84	23.88	4.23	39.10	22.88	4.72

EVAPORATOR AIR		CONDENSER ENTERING AIR TEMPERATURES °F (°C)														
		75 (23.9)			85 (29.4)			95 (35)			105 (40.6)			115 (46.1)		
CFM	EWB °F (°C)	Capacity MBtuh Total†	Capacity MBtuh Sens‡	Total Sys. KW**	Capacity MBtuh Total†	Capacity MBtuh Sens‡	Total Sys. KW**	Capacity MBtuh Total†	Capacity MBtuh Sens‡	Total Sys. KW**	Capacity MBtuh Total†	Capacity MBtuh Sens‡	Total Sys. KW**	Capacity MBtuh Total†	Capacity MBtuh Sens‡	Total Sys. KW**
CH13NA048–C Outdoor Section With FB4CNF048 Indoor Section																
1400	57 (13.9)	43.34	43.34	3.32	41.63	41.63	3.72	39.85	39.85	4.14	37.99	37.99	4.60	35.98	35.98	5.13
	62 (16.7)	44.87	41.72	3.32	42.73	40.63	3.73	40.55	39.51	4.15	38.30	38.30	4.61	35.98	35.98	5.13
	67 (19.4)	49.06	34.99	3.33	46.72	33.95	3.75	44.31	32.90	4.18	41.81	31.82	4.65	39.14	30.68	5.17
	72 (22.2)	53.58	28.21	3.32	51.03	27.19	3.76	48.41	26.16	4.21	45.69	25.10	4.69	42.80	23.99	5.21
1600	57 (13.9)	45.02	45.02	3.38	43.19	43.19	3.79	41.30	41.30	4.21	39.32	39.32	4.68	37.19	37.19	5.21
	62 (16.7)	45.80	44.60	3.38	43.61	43.42	3.79	41.40	41.17	4.21	39.32	39.32	4.68	37.19	37.19	5.21
	67 (19.4)	49.95	37.13	3.38	47.51	36.07	3.81	45.00	35.00	4.25	42.40	33.90	4.71	39.64	32.73	5.23
	72 (22.2)	54.51	29.49	3.37	51.85	28.46	3.82	49.14	27.41	4.27	46.31	26.34	4.75	43.31	25.21	5.27
1800	57 (13.9)	46.41	46.41	3.44	44.48	44.48	3.85	42.50	42.50	4.28	40.41	40.41	4.75	38.18	38.18	5.28
	62 (16.7)	46.62	47.13	3.44	44.48	44.48	3.85	42.49	42.49	4.28	40.41	40.41	4.75	38.17	38.17	5.28
	67 (19.4)	50.61	39.17	3.44	48.08	38.10	3.87	45.50	37.00	4.31	42.82	35.87	4.78	39.99	34.68	5.30
	72 (22.2)	55.20	30.70	3.43	52.46	29.66	3.88	49.66	28.60	4.34	46.76	27.51	4.82	43.68	26.37	5.34

See notes on pg. 15

DETAILED COOLING CAPACITIES* (CONT.)

EVAPORATOR AIR		CONDENSER ENTERING AIR TEMPERATURES °F (°C)														
		75 (23.9)			85 (29.4)			95 (35)			105 (40.6)			115 (46.1)		
CFM	EWB °F (°C)	Capacity MBtuh Total†	Capacity MBtuh Sens‡	Total Sys. KW**	Capacity MBtuh Total†	Capacity MBtuh Sens‡	Total Sys. KW**	Capacity MBtuh Total†	Capacity MBtuh Sens‡	Total Sys. KW**	Capacity MBtuh Total†	Capacity MBtuh Sens‡	Total Sys. KW**	Capacity MBtuh Total†	Capacity MBtuh Sens‡	Total Sys. KW**
CH13NA060–C Outdoor Section With FX4DN(B,F)061 Indoor Section																
1750	57 (13.9)	55.54	55.54	4.16	53.48	53.48	4.59	51.28	51.28	5.08	48.90	48.90	5.65	46.29	46.29	6.29
	62 (16.7)	57.44	52.66	4.18	54.88	51.38	4.61	52.18	50.00	5.10	49.30	48.49	5.65	46.30	46.30	6.29
	67 (19.4)	62.76	44.11	4.26	59.97	42.89	4.69	57.00	41.60	5.18	53.81	40.23	5.74	50.35	38.77	6.37
	72 (22.2)	68.52	35.51	4.35	65.52	34.33	4.79	62.31	33.07	5.28	58.87	31.74	5.84	55.14	30.30	6.47
2000	57 (13.9)	57.66	57.66	4.26	55.47	55.47	4.70	53.13	53.13	5.19	50.59	50.59	5.76	47.81	47.81	6.40
	62 (16.7)	58.62	56.27	4.28	56.00	54.88	4.71	53.27	52.93	5.19	50.59	50.59	5.76	47.81	47.81	6.40
	67 (19.4)	63.88	46.77	4.35	60.98	45.53	4.79	57.88	44.22	5.27	54.57	42.83	5.83	50.98	41.32	6.46
	72 (22.2)	69.71	37.09	4.44	66.59	35.89	4.88	63.26	34.61	5.37	59.70	33.24	5.93	55.84	31.77	6.56
2250	57 (13.9)	59.42	59.42	4.37	57.10	57.10	4.80	54.63	54.63	5.30	51.97	51.97	5.86	49.05	49.05	6.50
	62 (16.7)	59.64	59.42	4.37	57.10	57.10	4.80	54.63	54.63	5.30	51.96	51.96	5.86	49.04	49.04	6.50
	67 (19.4)	64.70	49.31	4.44	61.71	48.04	4.88	58.52	46.71	5.36	55.12	45.28	5.92	51.44	43.74	6.55
	72 (22.2)	70.61	38.58	4.54	67.39	37.35	4.97	63.96	36.04	5.46	60.30	34.65	6.02	56.34	33.14	6.65

* Detailed cooling capacities are based on indoor and outdoor unit at the same elevation, per AHRI Standard 210/240–2008, and connected by 25 ft of tubing. If other than 25 ft of tubing is used and/or indoor unit is located above outdoor unit, a slight variation in capacity may occur.

† Total and sensible capacities are net capacities. Blower motor heat has been subtracted.

‡ Sensible capacities shown are based on 80°F (27°C) entering air at the indoor coil. For sensible capacities at other than 80°F (27°C), deduct 835 Btuh (245 kW) per 1000 CFM (480 L/S) of indoor coil air for each degree below 80°F (27°C), or add 835 Btuh (245 kW) per 1000 CFM (480 L/S) of indoor coil air per degree above 80°F (27°C).
When the required data falls between the published data, interpolation may be performed.

** Unit kW is total of indoor and outdoor unit kilowatts.

HEAT PUMP HEATING PERFORMANCE

INDOOR AIR		OUTDOOR COIL ENTERING AIR TEMPERATURES °F (°C)																							
		–3 (–19.4)			7 (–13.9)			17 (–8.3)			27 (–2.8)			37 (2.8)			47 (8.3)			57 (13.9)			67 (19.4)		
EDB °F (°C)	CFM	Capacity MBtuh		Total Sys. KW†	Capacity MBtuh		Total Sys. KW†	Capacity MBtuh		Total Sys. KW†	Capacity MBtuh		Total Sys. KW†	Capacity MBtuh		Total Sys. KW†	Capacity MBtuh		Total Sys. KW†	Capacity MBtuh		Total Sys. KW†	Capacity MBtuh		Total Sys. KW†
		Total	Integ*		Total	Integ*		Total	Integ*		Total	Integ*		Total	Integ*		Total	Integ*		Total	Integ*		Total	Integ*	
CH13NA018–A Outdoor Section With FB4CNF018 Indoor Section																									
65 (18.3)	525	5.98	5.50	1.06	7.95	7.31	1.11	10.05	9.16	1.16	12.36	10.97	1.22	14.69	13.36	1.28	16.61	16.61	1.33	18.39	18.39	1.39	19.94	19.94	1.44
	600	6.06	5.57	1.06	8.05	7.40	1.11	10.16	9.27	1.15	12.52	11.12	1.20	14.71	13.39	1.25	16.49	16.49	1.29	18.04	18.04	1.33	19.28	19.28	1.37
	675	6.13	5.64	1.06	8.14	7.48	1.11	10.26	9.36	1.15	12.66	11.24	1.19	14.70	13.37	1.23	16.30	16.30	1.27	17.61	17.61	1.30	18.27	18.27	1.31
70 (21.1)	525	5.77	5.31	1.11	7.75	7.12	1.16	9.83	8.97	1.22	12.09	10.74	1.28	14.52	13.21	1.35	16.46	16.46	1.40	18.29	18.29	1.46	19.91	19.91	1.52
	600	5.86	5.39	1.11	7.85	7.22	1.16	9.96	9.08	1.21	12.26	10.89	1.26	14.57	13.26	1.32	16.40	16.40	1.36	18.07	18.07	1.41	19.38	19.38	1.45
	675	5.93	5.46	1.11	7.91	7.27	1.16	10.06	9.17	1.20	12.40	11.01	1.25	14.58	13.27	1.29	16.26	16.26	1.33	17.70	17.70	1.37	18.78	18.78	1.40
75 (23.9)	525	5.54	5.09	1.16	7.53	6.92	1.22	9.60	8.75	1.28	11.82	10.50	1.34	14.26	12.98	1.42	16.28	16.28	1.48	18.14	18.14	1.54	19.83	19.83	1.61
	600	5.62	5.17	1.16	7.64	7.02	1.21	9.73	8.87	1.27	11.99	10.65	1.32	14.39	13.10	1.39	16.27	16.27	1.43	17.97	17.97	1.49	19.40	19.40	1.53
	675	5.70	5.25	1.16	7.73	7.10	1.21	9.84	8.97	1.26	12.13	10.77	1.31	14.47	13.17	1.36	16.20	16.20	1.41	17.72	17.72	1.45	18.86	18.86	1.48

INDOOR AIR		OUTDOOR COIL ENTERING AIR TEMPERATURES °F (°C)																							
		–3 (–19.4)			7 (–13.9)			17 (–8.3)			27 (–2.8)			37 (2.8)			47 (8.3)			57 (13.9)			67 (19.4)		
EDB °F (°C)	CFM	Capacity MBtuh		Total Sys. KW†	Capacity MBtuh		Total Sys. KW†	Capacity MBtuh		Total Sys. KW†	Capacity MBtuh		Total Sys. KW†	Capacity MBtuh		Total Sys. KW†	Capacity MBtuh		Total Sys. KW†	Capacity MBtuh		Total Sys. KW†	Capacity MBtuh		Total Sys. KW†
		Total	Integ*		Total	Integ*		Total	Integ*		Total	Integ*		Total	Integ*		Total	Integ*		Total	Integ*		Total	Integ*	
CH13NA024–A Outdoor Section With FB4CNF024 Indoor Section																									
65 (18.3)	700	8.24	7.58	1.40	10.68	9.81	1.48	13.21	12.04	1.55	15.86	14.08	1.61	18.69	17.01	1.67	21.18	21.18	1.71	23.49	23.49	1.77	25.56	25.56	1.84
	800	8.38	7.71	1.40	10.83	9.96	1.48	13.39	12.20	1.54	16.05	14.26	1.59	18.87	17.17	1.63	21.20	21.20	1.67	23.29	23.29	1.72	25.20	25.20	1.76
	900	8.50	7.82	1.41	10.97	10.08	1.48	13.54	12.34	1.53	16.21	14.40	1.58	18.98	17.27	1.61	21.17	21.17	1.64	23.06	23.06	1.68	24.76	24.76	1.72
70 (21.1)	700	7.89	7.26	1.46	10.35	9.51	1.55	12.89	11.75	1.62	15.59	13.84	1.69	18.38	16.72	1.76	20.94	20.94	1.80	23.26	23.26	1.87	25.34	25.34	1.93
	800	8.03	7.39	1.46	10.51	9.66	1.55	13.07	11.92	1.61	15.79	14.02	1.67	18.58	16.91	1.72	21.00	21.00	1.76	23.13	23.13	1.81	25.08	25.08	1.86
	900	8.15	7.50	1.47	10.65	9.78	1.55	13.23	12.06	1.60	15.94	14.15	1.65	18.73	17.05	1.70	21.02	21.02	1.73	22.97	22.97	1.77	24.74	24.74	1.81
75 (23.9)	700	7.49	6.89	1.53	10.00	9.19	1.62	12.55	11.44	1.70	15.26	13.55	1.77	18.07	16.44	1.85	20.67	20.67	1.90	23.02	23.02	1.97	25.08	25.08	2.04
	800	7.64	7.03	1.53	10.16	9.34	1.62	12.74	11.61	1.69	15.47	13.74	1.75	18.29	16.64	1.81	20.78	20.78	1.85	22.99	22.99	1.91	24.90	24.90	1.96
	900	7.77	7.15	1.54	10.30	9.46	1.62	12.90	11.76	1.68	15.65	13.90	1.74	18.45	16.79	1.79	20.83	20.83	1.82	22.90	22.90	1.87	24.65	24.65	1.91

See notes on pg.20

HEAT PUMP HEATING PERFORMANCE

INDOOR AIR		OUTDOOR COIL ENTERING AIR TEMPERATURES °F (°C)																							
		−3 (−19.4)			7 (−13.9)			17 (−8.3)			27 (−2.8)			37 (2.8)			47 (8.3)			57 (13.9)			67 (19.4)		
EDB °F (°C)	CFM	Capacity MBtuh		Total Syst. KW†	Capacity MBtuh		Total Syst. KW†	Capacity MBtuh		Total Syst. KW†	Capacity MBtuh		Total Syst. KW†	Capacity MBtuh		Total Syst. KW†	Capacity MBtuh		Total Syst. KW†	Capacity MBtuh		Total Syst. KW†	Capacity MBtuh		Total Syst. KW†
		Total	Integ*		Total	Integ*		Total	Integ*		Total	Integ*		Total	Integ*		Total	Integ*		Total	Integ*		Total	Integ*	
CH13NA025–A Outdoor Section With HSVTC Indoor Section																									
65 (18.3)	700	9.58	8.82	1.52	11.98	11.01	1.59	14.58	13.29	1.66	17.51	15.56	1.75	20.82	18.94	1.86	24.20	24.20	1.96	27.14	27.14	2.06	30.15	30.15	2.17
	800	9.77	8.99	1.54	12.19	11.20	1.60	14.81	13.51	1.66	17.80	15.81	1.74	21.14	19.24	1.84	24.17	24.17	1.91	26.94	26.94	2.00	29.60	29.60	2.09
	900	9.94	9.15	1.56	12.37	11.37	1.61	15.03	13.70	1.67	18.06	16.04	1.74	21.40	19.47	1.83	24.07	24.07	1.89	26.59	26.59	1.97	28.87	28.87	2.03
70 (21.1)	700	9.29	8.54	1.59	11.70	10.75	1.67	14.30	13.04	1.74	17.18	15.26	1.84	20.47	18.63	1.95	23.95	23.95	2.06	26.95	26.95	2.17	30.01	30.01	2.29
	800	9.48	8.72	1.61	11.91	10.94	1.67	14.53	13.25	1.74	17.46	15.51	1.82	20.79	18.92	1.93	24.00	24.00	2.01	26.83	26.83	2.11	29.61	29.61	2.20
	900	9.65	8.87	1.63	12.09	11.11	1.69	14.73	13.43	1.75	17.71	15.73	1.83	21.06	19.16	1.92	23.97	23.97	1.99	26.60	26.60	2.07	29.03	29.03	2.15
75 (23.9)	700	8.96	8.24	1.67	11.40	10.48	1.75	14.02	12.78	1.83	16.85	14.97	1.93	20.14	18.33	2.05	23.63	23.63	2.17	26.71	26.71	2.28	29.80	29.80	2.41
	800	9.15	8.42	1.68	11.61	10.67	1.75	14.25	12.99	1.83	17.13	15.21	1.91	20.44	18.60	2.03	23.84	23.84	2.12	26.68	26.68	2.22	29.54	29.54	2.32
	900	9.33	8.58	1.70	11.80	10.84	1.77	14.45	13.17	1.83	17.37	15.43	1.91	20.71	18.84	2.02	23.82	23.82	2.09	26.53	26.53	2.18	29.10	29.10	2.27

INDOOR AIR		OUTDOOR COIL ENTERING AIR TEMPERATURES °F (°C)																							
		−3 (−19.4)			7 (−13.9)			17 (−8.3)			27 (−2.8)			37 (2.8)			47 (8.3)			57 (13.9)			67 (19.4)		
EDB °F (°C)	CFM	Capacity MBtuh		Total Sys. KW†	Capacity MBtuh		Total Sys. KW†	Capacity MBtuh		Total Sys. KW†	Capacity MBtuh		Total Sys. KW†	Capacity MBtuh		Total Sys. KW†	Capacity MBtuh		Total Sys. KW†	Capacity MBtuh		Total Sys. KW†	Capacity MBtuh		Total Sys. KW†
		Total	Integ*		Total	Integ*		Total	Integ*		Total	Integ*		Total	Integ*		Total	Integ*		Total	Integ*		Total	Integ*	
CH13NA030–A Outdoor Section With FB4CNF030 Indoor Section																									
65 (18.3)	875	12.30	11.32	1.78	15.19	13.96	1.86	18.26	16.65	1.95	21.59	19.18	2.04	24.67	22.45	2.10	27.32	27.32	2.18	29.97	29.97	2.25	32.24	32.24	2.32
	1000	12.46	11.47	1.78	15.38	14.13	1.86	18.46	16.83	1.93	21.78	19.34	2.01	24.68	22.46	2.07	27.21	27.21	2.13	29.50	29.50	2.18	31.49	31.49	2.23
	1125	12.61	11.60	1.79	15.53	14.27	1.86	18.63	16.99	1.93	21.91	19.46	1.99	24.66	22.44	2.04	26.95	26.95	2.09	28.98	28.98	2.14	30.71	30.71	2.17
70 (21.1)	875	12.00	11.04	1.86	14.89	13.69	1.95	17.99	16.41	2.04	21.29	18.91	2.14	24.43	22.23	2.21	27.10	27.10	2.29	29.79	29.79	2.37	32.05	32.05	2.44
	1000	12.17	11.19	1.86	15.08	13.86	1.95	18.20	16.60	2.03	21.49	19.08	2.11	24.49	22.29	2.17	27.00	27.00	2.24	29.44	29.44	2.30	31.47	31.47	2.35
	1125	12.31	11.33	1.87	15.24	14.01	1.95	18.37	16.75	2.02	21.66	19.23	2.09	24.51	22.31	2.15	26.90	26.90	2.20	29.02	29.02	2.25	30.82	30.82	2.29
75 (23.9)	875	11.66	10.73	1.95	14.58	13.39	2.05	17.68	16.12	2.14	20.95	18.61	2.25	24.16	21.99	2.32	26.89	26.89	2.41	29.58	29.58	2.50	31.85	31.85	2.57
	1000	11.83	10.89	1.95	14.77	13.57	2.04	17.89	16.31	2.13	21.19	18.82	2.22	24.27	22.09	2.28	26.81	26.81	2.35	29.31	29.31	2.42	31.39	31.39	2.48
	1125	11.99	11.03	1.96	14.93	13.72	2.04	18.08	16.48	2.12	21.36	18.97	2.20	24.33	22.14	2.25	26.71	26.71	2.31	28.99	28.99	2.37	30.85	30.85	2.42

See notes on pg.20

HEAT PUMP HEATING PERFORMANCE

INDOOR AIR		OUTDOOR COIL ENTERING AIR TEMPERATURES ° F (° C)																							
		–3 (–19.4)			7 (–13.9)			17 (–8.3)			27 (–2.8)			37 (2.8)			47 (8.3)			57 (13.9)			67 (19.4)		
EDB ° F (° C)	CFM	Capacity MBtuh		Total Syst. KW†	Capacity MBtuh		Total Syst. KW†	Capacity MBtuh		Total Syst. KW†	Capacity MBtuh		Total Syst. KW†	Capacity MBtuh		Total Syst. KW†	Capacity MBtuh		Total Syst. KW†	Capacity MBtuh		Total Syst. KW†	Capacity MBtuh		Total Syst. KW†
		Total	Integ*		Total	Integ*		Total	Integ*		Total	Integ*		Total	Integ*		Total	Integ*		Total	Integ*		Total	Integ*	
CH13NA031–A Outdoor Section With HSVTC Indoor Section																									
65 (18.3)	875	12.02	11.06	1.89	15.08	13.85	1.97	18.33	16.72	2.07	21.82	19.38	2.18	25.66	23.35	2.31	29.99	29.99	2.47	34.77	34.77	2.64	39.32	39.32	2.79
	1000	12.26	11.28	1.90	15.33	14.09	1.98	18.61	16.97	2.06	22.12	19.64	2.16	26.04	23.69	2.28	30.47	30.47	2.42	35.11	35.11	2.55	39.58	39.58	2.69
	1125	12.47	11.47	1.92	15.56	14.30	1.99	18.86	17.19	2.07	22.38	19.88	2.15	26.41	24.04	2.26	30.87	30.87	2.39	35.28	35.28	2.49	39.69	39.69	2.63
70 (21.1)	875	11.62	10.69	1.98	14.71	13.52	2.08	17.98	16.40	2.18	21.49	19.08	2.30	25.25	22.98	2.43	29.55	29.55	2.60	34.31	34.31	2.79	38.81	38.81	2.94
	1000	11.85	10.91	2.00	14.97	13.76	2.08	18.26	16.65	2.17	21.79	19.35	2.28	25.64	23.33	2.40	30.00	30.00	2.55	34.70	34.70	2.69	39.17	39.17	2.83
	1125	12.07	11.10	2.02	15.20	13.97	2.10	18.51	16.88	2.18	22.05	19.59	2.27	25.97	23.63	2.38	30.39	30.39	2.52	34.94	34.94	2.63	39.35	39.35	2.77
75 (23.9)	875	11.19	10.29	2.07	14.32	13.16	2.18	17.61	16.06	2.29	21.13	18.77	2.42	24.86	22.62	2.56	29.13	29.13	2.74	33.84	33.84	2.95	38.33	38.33	3.09
	1000	11.42	10.51	2.09	14.58	13.40	2.19	17.90	16.32	2.29	21.44	19.04	2.40	25.23	22.95	2.52	29.56	29.56	2.68	34.25	34.25	2.84	38.72	38.72	2.98
	1125	11.64	10.70	2.12	14.82	13.61	2.20	18.15	16.55	2.29	21.72	19.29	2.39	25.55	23.25	2.50	29.93	29.93	2.65	34.55	34.55	2.78	38.96	38.96	2.91

INDOOR AIR		OUTDOOR COIL ENTERING AIR TEMPERATURES ° F (° C)																							
		–3 (–19.4)			7 (–13.9)			17 (–8.3)			27 (–2.8)			37 (2.8)			47 (8.3)			57 (13.9)			67 (19.4)		
EDB ° F (° C)	CFM	Capacity MBtuh		Total Sys. KW†	Capacity MBtuh		Total Sys. KW†	Capacity MBtuh		Total Sys. KW†	Capacity MBtuh		Total Sys. KW†	Capacity MBtuh		Total Sys. KW†	Capacity MBtuh		Total Sys. KW†	Capacity MBtuh		Total Sys. KW†	Capacity MBtuh		Total Sys. KW†
		Total	Integ*		Total	Integ*		Total	Integ*		Total	Integ*		Total	Integ*		Total	Integ*		Total	Integ*		Total	Integ*	
CH13NA036–C Outdoor Section With FB4CNF036 Indoor Section																									
65 (18.3)	1050	13.10	12.05	2.16	16.57	15.23	2.25	20.30	18.51	2.35	24.33	21.61	2.45	28.66	26.08	2.57	33.16	33.16	2.69	37.42	37.42	2.81	41.70	41.70	2.94
	1200	13.34	12.27	2.17	16.84	15.47	2.25	20.60	18.78	2.34	24.67	21.91	2.43	29.03	26.42	2.54	33.45	33.45	2.64	37.56	37.56	2.74	41.70	41.70	2.85
	1350	13.55	12.46	2.19	17.07	15.68	2.26	20.85	19.01	2.34	24.95	22.16	2.43	29.32	26.68	2.52	33.63	33.63	2.60	37.60	37.60	2.69	41.55	41.55	2.79
70 (21.1)	1050	12.54	11.53	2.26	16.04	14.74	2.36	19.80	18.05	2.46	23.84	21.18	2.56	28.17	25.64	2.69	32.68	32.68	2.82	36.93	36.93	2.94	41.14	41.14	3.08
	1200	12.78	11.75	2.27	16.31	14.99	2.36	21.42	19.53	2.14	24.19	21.48	2.55	28.56	25.99	2.66	33.00	33.00	2.76	37.11	37.11	2.87	41.23	41.23	2.99
	1350	12.99	11.95	2.29	16.55	15.21	2.37	20.36	18.57	2.45	24.48	21.74	2.54	28.88	26.28	2.64	33.22	33.22	2.73	37.19	37.19	2.82	41.17	41.17	2.93
75 (23.9)	1050	11.91	10.96	2.37	15.48	14.22	2.47	19.26	17.56	2.57	23.32	20.71	2.69	27.67	25.18	2.82	32.27	32.27	2.96	36.54	36.54	3.08	40.57	40.57	3.23
	1200	12.15	11.18	2.38	15.75	14.48	2.47	19.59	17.86	2.56	23.68	21.03	2.66	28.07	25.54	2.79	32.52	32.52	2.90	36.68	36.68	3.01	40.72	40.72	3.13
	1350	12.37	11.38	2.40	15.99	14.70	2.48	19.84	18.09	2.56	23.98	21.29	2.66	28.39	25.84	2.77	32.79	32.79	2.86	36.75	36.75	2.96	40.73	40.73	3.07

See notes on pg.20

HEAT PUMP HEATING PERFORMANCE

INDOOR AIR		OUTDOOR COIL ENTERING AIR TEMPERATURES °F (°C)																							
		–3 (–19.4)			7 (–13.9)			17 (–8.3)			27 (–2.8)			37 (2.8)			47 (8.3)			57 (13.9)			67 (19.4)		
EDB °F (°C)	CFM	Capacity MBtuh		Total Sys. KW†	Capacity MBtuh		Total Sys. KW†	Capacity MBtuh		Total Sys. KW†	Capacity MBtuh		Total Sys. KW†	Capacity MBtuh		Total Sys. KW†	Capacity MBtuh		Total Sys. KW†	Capacity MBtuh		Total Sys. KW†	Capacity MBtuh		Total Sys. KW†
		Total	Integ*		Total	Integ*		Total	Integ*		Total	Integ*		Total	Integ*		Total	Integ*		Total	Integ*		Total	Integ*	
CH13NA042–C Outdoor Section With FB4CNF042 Indoor Section																									
65 (18.3)	1225	16.50	15.18	2.35	20.70	19.02	2.49	25.09	22.87	2.65	29.65	26.33	2.82	34.58	31.47	2.98	39.24	39.24	3.09	43.69	43.69	3.20	48.12	48.12	3.30
	1400	16.79	15.44	2.36	21.01	19.30	2.50	25.43	23.19	2.65	30.03	26.67	2.81	34.96	31.81	2.95	39.41	39.41	3.04	43.59	43.59	3.13	47.74	47.74	3.21
	1575	17.04	15.67	2.37	21.27	19.55	2.51	25.73	23.46	2.65	30.34	26.95	2.80	35.23	32.06	2.93	39.45	39.45	3.01	43.38	43.38	3.09	47.21	47.21	3.15
70 (21.1)	1225	15.96	14.68	2.49	20.18	18.55	2.63	24.58	22.41	2.78	29.24	25.97	2.95	34.06	30.99	3.11	38.78	38.78	3.23	43.24	43.24	3.34	47.59	47.59	3.46
	1400	16.25	14.95	2.50	20.50	18.84	2.63	24.93	22.73	2.77	29.60	26.29	2.93	34.48	31.38	3.08	39.00	39.00	3.17	43.20	43.20	3.27	47.37	47.37	3.36
	1575	16.50	15.18	2.52	20.78	19.09	2.64	25.24	23.01	2.78	29.89	26.55	2.93	34.79	31.66	3.06	39.11	39.11	3.15	43.07	43.07	3.23	46.98	46.98	3.30
75 (23.9)	1225	15.36	14.13	2.64	19.62	18.03	2.77	24.03	21.91	2.91	28.71	25.50	3.08	33.55	30.53	3.25	38.29	38.29	3.37	42.81	42.81	3.50	47.05	47.05	3.62
	1400	15.64	14.39	2.65	19.95	18.33	2.77	24.40	22.25	2.91	29.11	25.86	3.06	33.99	30.94	3.22	38.52	38.52	3.32	43.04	43.04	3.43	46.92	46.92	3.52
	1575	15.90	14.63	2.67	20.23	18.59	2.78	24.71	22.53	2.91	29.46	26.16	3.06	34.32	31.23	3.19	38.70	38.70	3.29	43.01	43.01	3.38	46.64	46.64	3.46

INDOOR AIR		OUTDOOR COIL ENTERING AIR TEMPERATURES °F (°C)																							
		–3 (–19.4)			7 (–13.9)			17 (–8.3)			27 (–2.8)			37 (2.8)			47 (8.3)			57 (13.9)			67 (19.4)		
EDB °F (°C)	CFM	Capacity MBtuh		Total Sys. KW†	Capacity MBtuh		Total Sys. KW†	Capacity MBtuh		Total Sys. KW†	Capacity MBtuh		Total Sys. KW†	Capacity MBtuh		Total Sys. KW†	Capacity MBtuh		Total Sys. KW†	Capacity MBtuh		Total Sys. KW†	Capacity MBtuh		Total Sys. KW†
		Total	Integ*		Total	Integ*		Total	Integ*		Total	Integ*		Total	Integ*		Total	Integ*		Total	Integ*		Total	Integ*	
CH13NA048–C Outdoor Section With FB4CNF048 Indoor Section																									
65 (18.3)	1400	19.51	17.94	2.85	24.31	22.34	2.96	29.33	26.75	3.09	34.59	30.72	3.23	39.59	36.03	3.32	43.98	43.98	3.43	48.36	48.36	3.54	52.16	52.16	3.64
	1600	19.80	18.22	2.87	24.64	22.65	2.98	29.70	27.08	3.09	34.93	31.02	3.20	39.69	36.11	3.29	43.77	43.77	3.38	47.47	47.47	3.46	48.90	48.90	3.48
	1800	20.08	18.47	2.91	24.94	22.91	3.00	30.02	27.37	3.11	35.20	31.26	3.20	39.67	36.10	3.28	43.40	43.40	3.35	45.69	45.69	3.39	46.67	46.67	3.39
70 (21.1)	1400	19.03	17.51	2.97	23.83	21.89	3.09	28.84	26.30	3.22	34.10	30.29	3.37	39.13	35.61	3.48	43.59	43.59	3.60	47.82	47.82	3.72	51.56	51.56	3.82
	1600	19.34	17.79	3.00	24.17	22.21	3.10	29.23	26.65	3.22	34.49	30.64	3.35	39.28	35.75	3.44	43.50	43.50	3.54	47.26	47.26	3.63	49.18	49.18	3.66
	1800	19.61	18.04	3.03	24.48	22.49	3.13	29.56	26.96	3.24	34.80	30.91	3.35	39.37	35.82	3.43	43.31	43.31	3.51	46.39	46.39	3.58	47.58	47.58	3.59
75 (23.9)	1400	18.48	17.00	3.11	23.28	21.40	3.23	28.31	25.81	3.37	33.63	29.87	3.53	38.65	35.18	3.64	43.12	43.12	3.77	47.48	47.48	3.90	51.18	51.18	4.01
	1600	18.79	17.29	3.13	23.64	21.72	3.24	28.71	26.17	3.37	34.04	30.24	3.51	38.86	35.36	3.60	43.15	43.15	3.71	47.19	47.19	3.81	48.98	48.98	3.85
	1800	19.08	17.55	3.16	23.96	22.01	3.26	29.05	26.49	3.38	34.36	30.52	3.50	38.98	35.47	3.59	43.08	43.08	3.68	46.82	46.82	3.76	48.22	48.22	3.78

See notes on pg.20

HEAT PUMP HEATING PERFORMANCE (CONT.)

INDOOR AIR		OUTDOOR COIL ENTERING AIR TEMPERATURES °F (°C)																							
		–3 (–19.4)			7 (–13.9)			17 (–8.3)			27 (–2.8)			37 (2.8)			47 (8.3)			57 (13.9)			67 (19.4)		
EDB °F (°C)	CFM	Capacity MBtuh		Total Sys. KW†	Capacity MBtuh		Total Sys. KW†	Capacity MBtuh		Total Sys. KW†	Capacity MBtuh		Total Sys. KW†	Capacity MBtuh		Total Sys. KW†	Capacity MBtuh		Total Sys. KW†	Capacity MBtuh		Total Sys. KW†	Capacity MBtuh		Total Sys. KW†
		Total	Integ*		Total	Integ*		Total	Integ*		Total	Integ*		Total	Integ*		Total	Integ*		Total	Integ*		Total	Integ*	
CH13NA060–C Outdoor Section With PF4MNA061 Indoor Section																									
65 (18.3)	1750	23.44	21.56	3.50	29.34	26.96	3.66	35.48	32.35	3.81	42.10	37.39	3.98	48.97	44.56	4.10	55.64	55.64	4.27	62.78	62.78	4.47	67.11	67.11	4.58
	2000	23.86	21.95	3.54	29.79	27.37	3.68	35.93	32.76	3.81	42.65	37.88	3.96	49.31	44.87	4.07	55.85	55.85	4.21	62.14	62.14	4.36	63.31	63.31	4.37
	2250	24.24	22.30	3.59	30.19	27.74	3.72	36.35	33.14	3.84	43.06	38.25	3.96	49.56	45.10	4.06	55.88	55.88	4.19	59.55	59.55	4.26	60.70	60.70	4.26
70 (21.1)	1750	22.60	20.79	3.65	28.59	26.27	3.82	34.80	31.73	3.98	41.43	36.79	4.16	48.38	44.02	4.30	55.00	55.00	4.48	62.04	62.04	4.68	65.94	65.94	4.78
	2000	23.03	21.19	3.69	29.05	26.70	3.84	35.30	32.18	3.99	41.98	37.28	4.15	48.75	44.36	4.26	55.28	55.28	4.41	62.05	62.05	4.59	62.80	62.80	4.58
	2250	23.41	21.54	3.73	29.47	27.08	3.88	35.73	32.58	4.01	42.46	37.71	4.15	49.03	44.62	4.25	55.41	55.41	4.39	60.09	60.09	4.49	61.68	61.68	4.50
75 (23.9)	1750	21.71	19.97	3.80	27.80	25.54	3.99	34.09	31.08	4.17	40.72	36.16	4.36	47.74	43.44	4.51	54.34	54.34	4.70	61.36	61.36	4.91	65.75	65.75	5.04
	2000	22.14	20.37	3.84	28.27	25.97	4.01	34.59	31.54	4.17	41.28	36.66	4.34	48.18	43.84	4.47	54.66	54.66	4.63	61.54	61.54	4.82	63.78	63.78	4.85
	2250	22.52	20.72	3.89	28.68	26.35	4.05	35.03	31.94	4.19	41.76	37.09	4.35	48.49	44.13	4.45	54.88	54.88	4.60	60.85	60.85	4.73	62.33	62.33	4.75

NOTE: When the required data fall between the published data, interpolation may be performed. Extrapolation is not an acceptable practice.

* The Btuh heating capacity values shown are net “integrated” values from which the defrost effect has been subtracted. The Btuh heating from supplement heaters should be added to those values to obtain total system capacity.

† The kW values include the compressor, outdoor fan motor, and indoor blower motor. The kW from supplement heaters should be added to these values to obtain total system kilowatts.

EDB = Entering Dry Bulb

GUIDE SPECIFICATIONS
GENERAL

System Description

Outdoor-mounted, air-cooled, split-system air conditioner unit suitable for ground or rooftop installation. Unit consists of a hermetic compressor, an air-cooled coil, propeller-type condenser fan, and a control box. Unit will discharge supply air upward as shown on contract drawings. Unit will be used in a refrigeration circuit to match up to a packaged fan coil or coil unit.

Quality Assurance

— Unit will be rated in accordance with the latest edition of AHRI Standard 210.

— Unit will be certified for capacity and efficiency, and listed in the latest AHRI directory.

— Unit construction will comply with latest edition of ANSI/ ASHRAE and with NEC.

— Unit will be constructed in accordance with UL standards and will carry the UL label of approval. Unit will have c-UL-us approval.

— Unit cabinet will be capable of withstanding Federal Test Method Standard No. 141 (Method 6061) 500-hr salt spray test.

— Air-cooled condenser coils will be leak tested at 150 psig and pressure tested at 450 psig.

— Unit constructed in ISO9001 approved facility.

Delivery, Storage, and Handling

— Unit will be shipped as single package only and is stored and handled per unit manufacturer's recommendations.

Warranty (for inclusion by specifying engineer)

— U.S. and Canada only.

PRODUCTS

Equipment

Factory assembled, single piece, air-cooled air conditioner unit. Contained within the unit enclosure is all factory wiring, piping, controls, compressor, refrigerant charge Puron® (R-410A), and special features required prior to field start-up.

Unit Cabinet

— Unit cabinet will be constructed of galvanized steel, bonderized, and coated with a powder coat paint.

— 3 phase equipment available with dense grille only.

— Single phase equipment available with wide (W) or dense (A) grille option.

Fans

— Condenser fan will be direct-drive propeller type, discharging air upward.

— Condenser fan motors will be totally enclosed, 1-phase type with class B insulation and permanently lubricated bearings. Shafts will be corrosion resistant.

— Fan blades will be statically and dynamically balanced.

— Condenser fan openings will be equipped with coated steel wire safety guards.

Compressor

— Compressor will be hermetically sealed.

— Compressor will be mounted on rubber vibration isolators.

Condenser Coil

— Condenser coil will be air cooled.

— Coil will be constructed of aluminum fins mechanically bonded to copper tubes which are then cleaned, dehydrated, and sealed.

Refrigeration Components

— Refrigeration circuit components will include liquid-line shutoff valve with sweat connections, vapor-line shutoff valve with sweat connections, system charge of Puron® (R-410A) refrigerant, and compressor oil.

— Unit will be equipped with high-pressure switch, low pressure switch and filter drier for Puron refrigerant.

Operating Characteristics

— The capacity of the unit will meet or exceed _____ Btuh at a suction temperature of _____ °F/°C. The power consumption at full load will not exceed _____ kW.

— Combination of the unit and the evaporator or fan coil unit will have a total net cooling capacity of _____ Btuh or greater at conditions of _____ CFM entering air temperature at the evaporator at _____ °F/°C wet bulb and _____ °F/°C dry bulb, and air entering the unit at _____ °F/°C.

— The system will have a SEER of _____ Btuh/watt or greater at DOE conditions.

Electrical Requirements

— Nominal unit electrical characteristics will be _____ v, single phase, 60 hz. The unit will be capable of satisfactory operation within voltage limits of _____ v to _____ v.

— Nominal unit electrical characteristics will be _____ v, three phase, 60 hz. The unit will be capable of satisfactory operation within voltage limits of _____ v to _____ v.

— Unit electrical power will be single point connection.

— Control circuit will be 24v.

Special Features

— Refer to section of this literature identifying accessories and descriptions for specific features and available enhancements.

SYSTEM DESIGN SUMMARY

1. Intended for outdoor installation with free air inlet and outlet. Outdoor fan external static pressure available is less than 0.01-IN. W.C.
2. Minimum outdoor operating air temperature without low-ambient operation accessory is 55°F (12.8°C).
3. Maximum outdoor operating air temperature is 125°F (51.7°C).
4. For reliable operation, unit should be level in all horizontal planes.
5. For interconnecting refrigerant tube lengths greater than 80 ft (23.4 m) and/or 35 ft (10.7 m) vertical differential, consult Residential Piping and Longline Guideline and Service Manual available from equipment distributor.
6. If any refrigerant tubing is buried, provide a 6 in. (152.4 mm) vertical rise to the valve connections at the unit. Refrigerant tubing lengths up to 36 in. (914.4 mm) may be buried without further consideration. Do not bury refrigerant lines longer than 36 in. (914.4 mm).
7. Use only copper wire for electric connection at unit. Aluminum and clad aluminum are not acceptable for the type of connector provided.
8. Do not apply capillary tube indoor coils to these units.
9. Factory-supplied filter drier must be installed.

Copyright 2012 Carrier Corp. • 7310 W. Morris St. • Indianapolis, IN 46231

Edition Date: 09/12

Catalog No: CH13NA-04PD

Manufacturer reserves the right to change, at any time, specifications and designs without notice and without obligations.

Replaces: CH13NA-03PD