EAA5X

Evaporator Coils for R-454B Refrigerant
Upflow - Downflow, Uncased

Installation Instructions

IMPORTANT: This unit is to be used with R-454B refrigerant only. This system includes an internal sensor to detect any refrigerant leaks with an external control board that must be connected to a furnace. This is only compatible with outdoor condensers that are R-454B certified.
NOTE: Read the entire instruction manual before starting the installation.

SAFETY CONSIDERATIONS

Improper installation, adjustment, alteration, service, maintenance, or use can cause explosion, fire, electrical shock or other conditions which may cause death, personal injury or property damage. Consult a qualified installer, service agency, or your distributor or branch for information or assistance. The qualified installer or agency must use factory-authorized kits or accessories when modifying this product. Refer to the individual instructions packaged with the kits or accessories when installing.

Follow all safety codes. Wear safety glasses, protective clothing and work gloves. Use quenching cloths for brazing operations. Have fire extinguisher available. Read these instructions thoroughly and follow all warnings or cautions attached to the unit. Consult local building codes and the current editions of the National Electrical Codes (NEC) NFPA 70.

In Canada, refer to the current editions of the Canadian Electrical Code CSA C22.1.

Recognize safety information. This is the safety-alert symbol ⚠. When you see this symbol on the unit and in instructions or manuals, be alert to the potential for personal injury.

Understand the signal words DANGER, WARNING and CAUTION. These words are used with the safety-alert symbol. DANGER identifies the most serious hazards which will result in severe personal injury or death. WARNING signifies hazards which could result in personal injury or death. CAUTION is used to identify unsafe practices, which may result in minor personal injury or product and property damage. NOTE is used to highlight suggestions which will result in enhanced installation, reliability, or operation.

⚠ WARNING

PROPERTY DAMAGE HAZARD — FURNACE/COIL MATCHING

Failure to follow this warning could result in property damage, personal injury, or death.

This coil must be matched to heating equipment that meets all CSA/ANSI Z21.47 or cooling equipment that meets UL 60335-2-40. Refer to the furnace/blower installation instructions for any potential considerations when installing coils with composite drain pans.

⚠ CAUTION

PARTIAL UNIT REQUIREMENTS

Failure to follow this warning could result in equipment damage.

This family of evaporator coils are PARTIAL UNIT HEAT PUMP OR AIR CONDITIONER, complying with PARTIAL UNIT requirements of UL/CSA 60335-2-40 Standard, and must only be connected to other units that have been confirmed as complying to corresponding PARTIAL UNIT requirements of this UL/CSA 60335-2-40 Standard.

⚠ WARNING

PERSONAL INJURY / PROPERTY DAMAGE HAZARD

Failure to follow this warning could result in property damage, personal injury, or death.

For continued performance, reliability, and safety, the only approved accessories and replacement parts are those specified by the equipment manufacturer. The use of non-manufacturer approved parts and accessories could invalidate the equipment limited warranty and result in fire risk, equipment malfunction, and failure. Please review manufacturer's instructions and replacement part catalogs available from your equipment supplier.

⚠ WARNING

ELECTRICAL SHOCK HAZARD

Failure to follow this warning could result in personal injury or death.

Before installing, modifying or servicing system, always turn off main power to system. There may be more than one disconnect switch. Lock out and tag switch with a suitable warning label.

⚠ CAUTION

HOT TUBE WARNING

Failure to follow this caution could result in personal injury and/or property damage.

Refrigerant lines can reach or exceed 130 °F (54 °C). Avoid contact with the vapor header or vapor line, especially in Heating Mode. Do not service A2L refrigerant furnace coils while these components are hot to avoid risk of ignition source.

⚠ WARNING

PERSONAL INJURY HAZARD

Failure to follow this caution may result in personal injury.

This coil contains Nitrogen precharge of 7 – 10 PSIG. Release this pressure through the center of the rubber plugs before removing plugs.

⚠ WARNING

EXPLOSION HAZARD

Failure to follow this warning could result in death, serious personal injury, and/or property damage.

Never use air or gases containing oxygen for leak testing or operating refrigerant compressors. Pressurized mixtures of air or gases containing oxygen can cause an explosion.

⚠ CAUTION

CUT HAZARD

Failure to follow this caution may result in personal injury.

Sheet metal parts may have sharp edges or burrs. Use care and wear appropriate protective clothing and gloves when handling parts.

⚠ CAUTION

UNIT OR PROPERTY DAMAGE HAZARD

Failure to follow this caution may result in property damage.

Make sure that Aluminum tubes do not come in direct contact or allow for condensate run off with a dissimilar metal. Dissimilar metals can cause galvanic corrosion and possible premature failure.

⚠ WARNING

PROPERTY OR PERSONAL INJURY HAZARD

Risk of fire. Flammable refrigerant used.

To be repaired only by trained service personnel. Do not puncture refrigerant tubing.

Auxiliary devices which may be ignition sources shall not be installed in the ductwork, other than auxiliary devices listed for use with the specific appliance. See instructions.

Dispose of refrigerant properly in accordance with federal or local regulations.

INTRODUCTION

Use this instruction manual to install EAA5X indoor coils on upflow or downflow furnaces. Do not install coil in horizontal position. EAA5X are uncased (bare) coils that require a field-fabricated or accessory enclosure.

INSTALLATION

Inspect Equipment

Inspect equipment for damage prior to installation. File claim with shipping company if shipment is damaged or incomplete. Locate the rating plate attached to the coil assembly. Check the rating plate model number and the AHRI Directory to ensure outdoor and indoor units are properly matched and meet job specifications.

Select Installation

See Table 1 for dimensions. Note instructions for placement of the coil casing on the furnace.

Installation Of Evaporator Coil

NOTE: Consult the furnace installation instructions for any special requirements when installing the coil to the furnace.

⚠ NOTICE

Labels provided with the unit must be installed per requirements of UL 60335-2-40 and applicable building codes. See details after Table 1.

⚠ CAUTION

UNIT OR PROPERTY DAMAGE HAZARD

Failure to follow this caution may result in product or property damage.

Take precautions to ensure that aluminum tubes do no come in direct contact or allow for condensate runoff with dissimilar metal. Dissimilar metals can cause galvanic corrosion and possible premature failure.

⚠ WARNING

PROPERTY OR PERSONAL INJURY HAZARD

Coil must be installed such that there is no bypass air and that plenum dimensional requirements are followed. Failure to follow instructions could result in dissipation system loss of function.

Table 1 – EAA5X Uncased Coil Information

MODEL NUMBER	TONNAGE	MATCHED FURNACE WIDTH (IN.)	UNCASED COIL DIMENSIONS		PLENUM DIMENSIONS	
			Width	Depth	Width	Depth
EAA5X24M14A	2	14-3/16	13-1/8	19-7/8	14-3/16	20-5/8
EAA5X24M17A	2	17-1/2	16-7/16	19-7/8	17-1/2	20-5/8
EAA5X30M14A	2-1/2	14-3/16	13-1/8	19-7/8	14-3/16	20-5/8
EAA5X30M17A	2-1/2	17-1/2	16-7/16	19-7/8	17-1/2	20-5/8
EAA5X36M17A	3	17-1/2	16-7/16	19-7/8	17-1/2	20-5/8
EAA5X37M17A	3	17-1/2	16-7/16	19-7/8	17-1/2	20-5/8
EAA5X42M21A	3-1/2	21	19-15/16	19-7/8	21	20-5/8
EAA5X48M21A	4	21	19-15/16	19-7/8	21	20-5/8
EAA5X60M24A	5	24-1/2	23-7/16	19-7/8	24-1/2	20-5/8
EAA5X61M21A	5	21	19-15/16	19-7/8	21	20-5/8

For downflow EAA5X coil installations in pre-installed empty coil casing:

1. Remove and discard fitting panel shipped with the uncased coil (Fig. 1).
2. Remove access panels of pre-installed qualified empty coil casing and slide the uncased coil into place.
3. Ensure proper coil installation such that there is no air bypass.
4. Install the fitting panel on the refrigerant tubes and condensate drain.
5. Re-attach the access panel.
6. Adhere the provided labels to the outside of the plenum or casing on a clean, dry and firm surface (Fig. 2).

For upflow EAA5X coil installations in pre-installed empty coil casing:

1. Remove and discard fitting panel shipped with the uncased coil (Fig. 1).
2. Remove access panels of pre-installed qualified empty coil casing and slide the uncased coil into place.
3. Ensure proper coil installation such that there is no air bypass.
4. Install the fitting panel on the refrigerant tubes and condensate drain.
5. Re-attach the access panel.
6. Adhere the provided labels to the outside of the plenum or casing on a clean, dry and firmfirmsurface (Fig. 2).

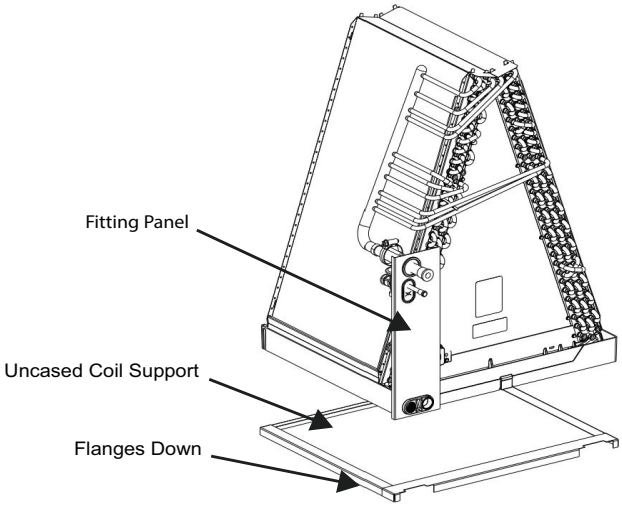

A05211B

Fig. 1 – Uncased Coil Support

For upflow EAA5X coil plenum installation:

1. Mount factory coil support (shipped with coil) directly on furnace flanges to support the coil (Fig. 1).

IMPORTANT: Uncased coil width and depth dimensions are larger than furnace flange dimensions. See Table 1 for uncased coil dimensions. Fabricate supply plenum according.

2. Slide coil into plenum opening.
3. Ensure proper coil installation such that there is no air bypass.
4. Cover plenum opening with field supplied front panel.
5. When installing uncased coil into pre-installed accessory coil casing, use Table 1 to verify correct match.
6. Adhere the provided labels to the outside of the plenum or casing on a clean, dry and firm surface (Fig. 2).

NOTE: On upflow installations where the indoor coil is placed in an unconditioned space, a 6" wide piece of insulation should be applied and wrapped around the outside of coil casing and supply duct contact point.

For downflow EAA5X coil installation in existing or field fabricated coil casing where furnace is narrower than the casing or rotated 90 degrees to casing:

1. Set uncased coil in supply duct opening.
2. Ensure proper coil installation such that there is no air bypass.
3. Place field fabricated 3" adapter on coil casing. Adapter should be tapered to fit coil/furnace combination when one of them is larger than the other.
4. Set furnace on adapter.
5. Adhere the provided labels to the outside of the plenum or casing on a clean, dry and firm surface (Fig. 2).

IMPORTANT: Installing “A” coils rotated 90° from the front of the furnace in downflow applications can cause water blow off or coil freeze up. This is due to the concentration of air on one coil slab or lack of air on the opposite coil slab. If the airflow is high due to ductwork or other causes, and there is a chance for water blow off, it is recommended that a 3" field-supplied adapter be placed between the coil and the furnace to allow the air to distribute evenly to both coil slabs (Fig. 2).

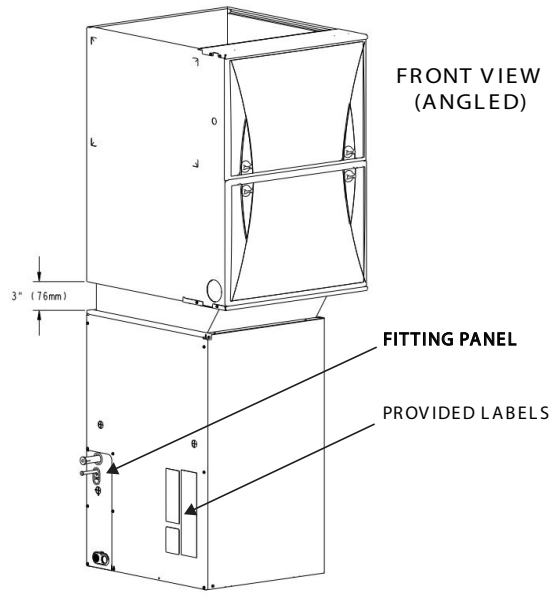

A13062

Fig. 2 – Downflow Installation with Coil Rotated 90°

Refrigerant Line Connections

WARNING

PERSONAL INJURY HAZARD

Failure to follow this warning could result in personal injury.

Wear eye protection.

Coil is factory charged with 15 psi nitrogen. The coil is under pressure and TXV screen is in place behind liquid line plug. DO NOT remove liquid line plug first, always remove the suction line plug first to depressurize the coil.

NOTE: Factory nitrogen charge may escape past rubber plugs during storage. This does not indicate a leaking coil nor warrant return of the coil.

Size and install refrigerant lines according to information provided with outdoor unit. Coil connection tube sizes are shown in the Product Data sheet. Route refrigerant lines to the coil in a manner that will not obstruct service access to the unit or removal of the filter.

Do not use damaged, dirty, or contaminated tubing because it may plug refrigerant flow-control device. ALWAYS evacuate the coil and field-supplied tubing before opening outdoor unit service valves.

Connect Refrigerant, Liquid, and Suction Lines

For matched and mismatched systems, use line sizes recommended in outdoor unit Installation Instructions.

CAUTION

UNIT OR PRODUCT DAMAGE HAZARD

Failure to follow this caution may result in property damage.

Take precautions to ensure Aluminum tubes do not come in direct contact or allow for condensate run off with a dissimilar metal. Dissimilar metals can cause galvanic corrosion and possible premature failure.

Mechanical Fittings

IMPORTANT: Mechanical fittings must meet or exceed maximum operating pressure of 700 psig for evaporator coils.

Follow mechanical fitting supplier's instructions for installation.

Brazed Fittings

CAUTION

UNIT DAMAGE HAZARD

Failure to follow this caution may result in product damage.

To avoid valve damage to the refrigerant control device while brazing, valves must be wrapped with a heat-sinking material such as a wet cloth.

The coil can be connected to outdoor units using field-supplied tubing of refrigerant grade. Always evacuate tubing and reclaim refrigerant when making connections or flaring tubing. Leak check connections before insulating entire suction line.

See Table 1 for coil connection tube size.

1. Remove cabinet access door.
2. Remove rubber plugs, suction plug then liquid plug, from coil stubs using a pulling and twisting motion. Hold coil stubs steady to avoid bending or distorting.
3. Remove fitting door with rubber grommets and slide fitting door with grommets onto the refrigerant lines (field line-set), away from braze joints.

CAUTION

UNIT DAMAGE HAZARD

Failure to follow this caution may result in damage.

All aluminum tubing and coils must be adequately shielded from any copper braze splatter.

4. For optimal performance, swedge stub outs according to the outdoor unit’s recommended lineset size. Wrap a heat sinking material such as a wet cloth behind braze joints.
5. Wrap TXV and nearby tubing with a heat-sinking material such as a wet cloth.
6. Use 1/2 psig Nitrogen purge in the suction and out the liquid line.
7. Braze using a Sil-Fos or Phos-copper alloy. Do not use soft solder.
8. After brazing, allow joints to cool. Carefully remove TXV bulb insulation and verify that the TXV bulb is securely fastened with hose clamp. Tighten screw a half-turn past hand tight with TXV bulb placed in the indentation with full contact with the vapor line tube. Re-wrap TXV bulb with insulation.
9. Perform a pressure check of the unit with a nitrogen charge of approx. 200 psi. The nitrogen holding charge must not decrease in pressure for 1 hour.
10. Perform a leak check on the unit. Vacuum unit to 500 microns. When isolating the unit from the pump, the pressure shall not rise above 1000 microns in 7 minutes (Fig. 3).

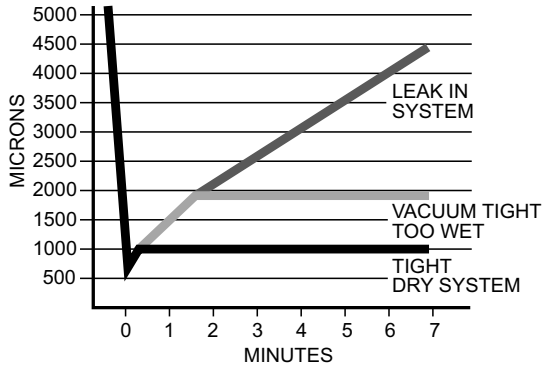

A95424

Fig. 3 – Deep Vacuum Graph

11. Slide fitting door with rubber grommets over joints. Position tubing at center of each grommet to ensure an air seal around the tube. Reinstall cabinet door.

TXV

NOTE: These TXV's are equipped with mechanical connections. There is no brazing required.

A thermal expansion valve is utilized in this coil design to optimize performance and comfort throughout the entire cooling operating range of the system. Special attention needs to be taken to the TXV when installing the coil (Fig. 4):

- Place liquid filter dryer near indoor unit to reduce the risk of debris clogging the valve.
- Make sure TXV bulb is securely fastened with a metal strap and wrapped in the indentation on vapor line tube.

These specific coils have a factory-installed hard-shutoff TXV designed only for use with R-454B refrigerant. Use only with outdoor units designed for R-454B refrigerant.

NOTE: These TXV's are factory set at approximately 10° superheat measured at the suction service valve, and are **not** field adjustable.

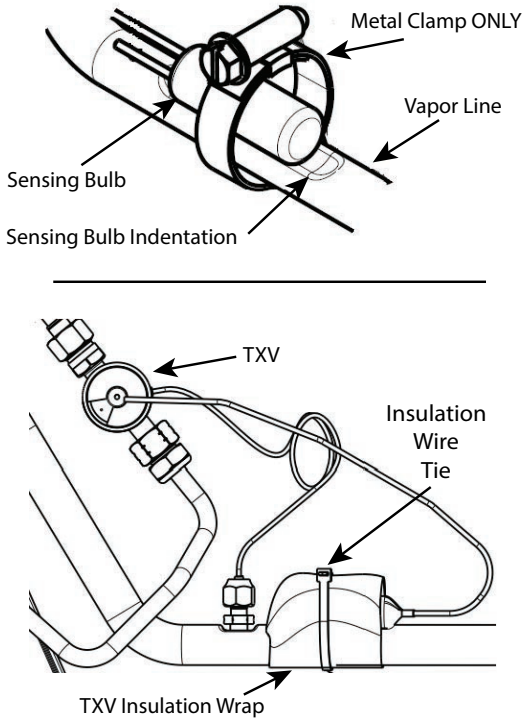

A210138A

Fig. 4 – TXV Bulb

Condensate Drain

Units are equipped with primary and secondary 3/4" FPT drain connections. It is recommended that PVC fittings be used on the plastic condensate pan. Do not over-tighten. Finger-tighten plus 1-1/2 turns. For proper condensate line installation review Fig. 5 and Fig. 6.

⚠ CAUTION

UNIT OR PRODUCT DAMAGE HAZARD

Failure to follow this caution may result in unit or product damage.

BOTH primary and secondary drain lines should be installed and include properly sized condensate traps. Shallow, running traps are inadequate and do not allow proper condensate drainage. Use pipe dope. Do not over-torque. Hand tighten plus 1-1/2 turns.

NOTE: When connecting condensate drain lines, avoid blocking filter access panel, thus preventing filter removal. After connection, prime both primary and secondary condensate traps.

IMPORTANT: The owner of the structure must be informed that when condensate flows from the secondary drain, the unit requires servicing or else water damage will occur.

Optionally, a float switch may be used in lieu of a secondary drain. If so, make sure the float switch is installed so that it will trip before the water exits the weep hole between the drain pans. The float switch may be installed in the primary drain line or inside the pan. If installing in the secondary drain, make sure the float switch is below the exit of the drain.

NOTE: Do not install the float switch at the same level as the secondary drain exit.

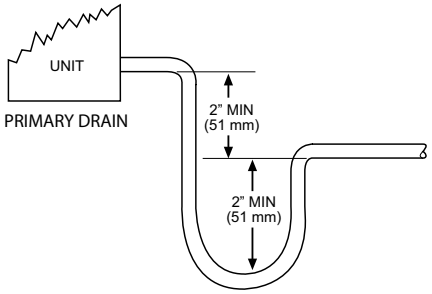

A03002A

Fig. 5 – Recommended Condensate Trap

A03013

Fig. 6 – Insufficient Condensate Trap

NOTE: If unit is located in or above a living space, where damage may result from condensate overflow, a field-supplied, external condensate pan should be installed underneath the entire unit, and a secondary condensate line (with appropriate trap) should be run from the unit into the pan. Any condensate in this external condensate pan should be drained to a noticeable place. As an alternative to using an external condensate pan, some localities may allow the running of a separate 3/4 inch (19 mm) condensate line (with appropriate trap) per local code to a place where the condensate will be noticeable. The property owner must be informed that when condensate flows from the secondary drain or external condensate pan, the unit requires servicing or property damage may occur.

To further protect against water damage, the International Mechanical Code (IMC) and local code may require a float switch to be installed to shut the equipment OFF if the drainage system is blocked. In 24V wired systems, a float switch listed to UL508 should be wired in the field "R" circuit from the "R" field connection terminal of the furnace leading to the thermostat. When communicating equipment is installed and wired with a communicating wall control, follow unit instructions for wiring the float switch and configuring the wall control.

⚠ WARNING

FIRE HAZARD

Failure to follow this warning could result in property damage, personal injury, or death.

When using a float switch in a secondary condensate pan or drain line, DO NOT wire the switch to break the 24V power directly from the transformer "R" circuit, as this will defeat the refrigerant leak dissipation and mitigation functions.

ELECTRICAL CONNECTIONS

This evaporator includes low voltage (24V) electrical equipment. ALL equipment must be installed for proper operation of the system and to prevent hazardous conditions per UL60335-2-40.

Leak Dissipation System

This unit is required to be installed with an R-454B leak detection and dissipation system (included with the evaporator coil). This system is comprised of a refrigerant sensor, sensor wire harness, leak dissipation control board, dissipation board housing, and power wire harness. Failure to install this system will result in potentially hazardous conditions and improper equipment operation, and void all system warranties and liabilities.

Refrigerant Sensor (Upflow / Downflow only)

The 5V refrigerant sensor will be factory installed inside of the evaporator coil. For proper operation, the sensor must remain in the factory installed location inside of the evaporator coil. Verify that the refrigerant sensor is installed in the correct location and orientation (Fig. 7).

⚠ WARNING

PRODUCT OPERATION / INJURY HAZARD

Failure to follow this warning could cause property damage or personal injury.

Make sure the sensor is not exposed to significant amounts of dust/dirt contamination. This could clog the sensor and prevent proper functioning. For sensor cleaning instructions, refer to service manual.

IMPORTANT: Sensor must be installed with the connector facing down or facing horizontally. Sensor should never be positioned with connector facing upward. Incorrect sensor position could result in premature failure.

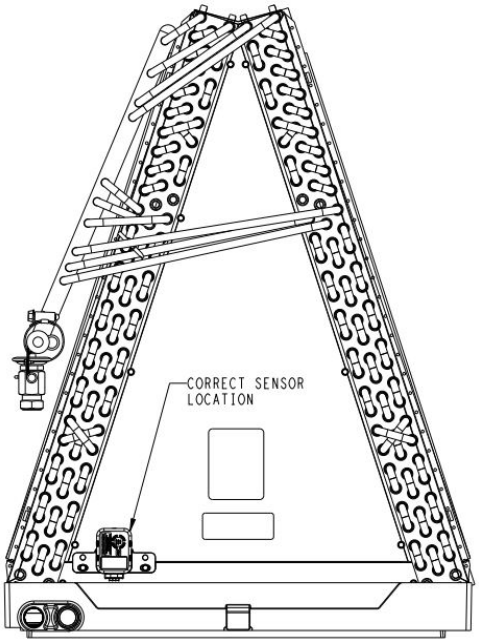

A230510

Fig. 7 – R-454B Leak Sensor Mounting Location (all A-Coil Applications)

Sensor Wire Harness

The 8-foot-long sensor wire harness will be factory installed to the sensor inside of the evaporator coil. Verify that the sensor wire harness is connected to the refrigerant sensor (Fig. 7).

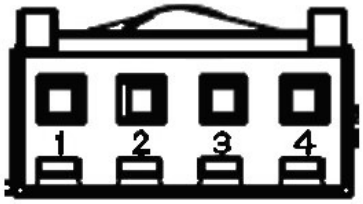

A230454

Fig. 8 – Sensor Wire Harness Pin Layout

Leak Dissipation Control Board

The leak dissipation control board will be factory installed inside of the dissipation board housing (Fig. 9, Fig. 10).

The dissipation board housing cover is clear, so the LED indicators can be viewed when servicing (Fig. 10). There are two LED indicators: one amber for system status; one green for communicating systems only.

NOTE: The Communicating (CCN) plug is not included with the evaporator coil. The technician will need to provide and install the CCN plug on the dissipation board for communicating systems. Reference Product Data sheet for details on the communicating plug for any communicating system.

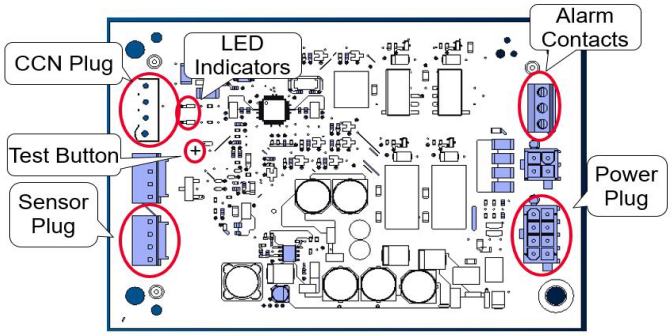

A230455

Fig. 9 – Leak Dissipation Control Board

Dissipation Board Housing

The dissipation board housing (Fig. 10) (which contains the dissipation control board) is required to be installed on a wall or unit as close as possible to the furnace control box, within 8 feet (along the wire harnesses) of the refrigerant sensor and the furnace control board.

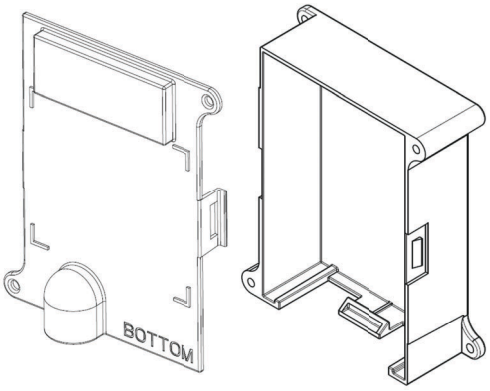

A230456

Fig. 10 – Dissipation Board Housing

Power Wire Harness

The 8-foot-long power wire harness will be included with the dissipation board (Fig. 11). Verify that the 8-pin connector is properly attached to the dissipation board during installation.

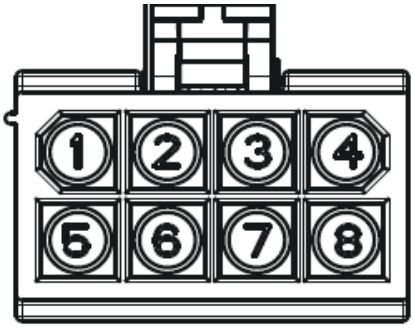

A230457

Fig. 11 – Front View of Power Wire Harness Pin Layout

24V Control System

Connection to the Unit

Wire 24V low-voltage R-454B leak detection and dissipation system in accordance with wiring label on the dissipation board housing cover. Refer to outdoor unit or furnace wiring instruction for any additional wiring procedure recommendations/requirements.

NOTE: For communicating outdoor units, wires 3–7 (Table 2) are unused. Cut and wire nut these individually.

Table 2 – Dissipation System Wiring Label

Pin	Color	1-Stage Label	2-Stage Label
1	RED	to Furnace SEC1	to Furnace SEC1
2	GRN / VIO	to Furnace G	to Furnace G
3	WHT	to TSTAT W	to TSTAT W1
4	YEL / VIO	to OD unit Y	to OD unit Y1
5	YEL	to Furnace Y	to Furnace Y1
6	GRN	to TSTAT G	to TSTAT G
7	WHT / VIO	to Furnace W	to Furnace W1
8	BLK	to Furnace C	to Furnace C
	WIRE COLOR (ACRONYM): Red (RED), Green (GRN), Violet (VIO), White (WHT), Yellow (YEL), Black (BLK), Orange (ORN)		

Wiring Diagrams

NOTE: All dashed lines in wiring diagrams are field-supplied wires. All solid lines in wiring diagrams are provided with the respective unit.

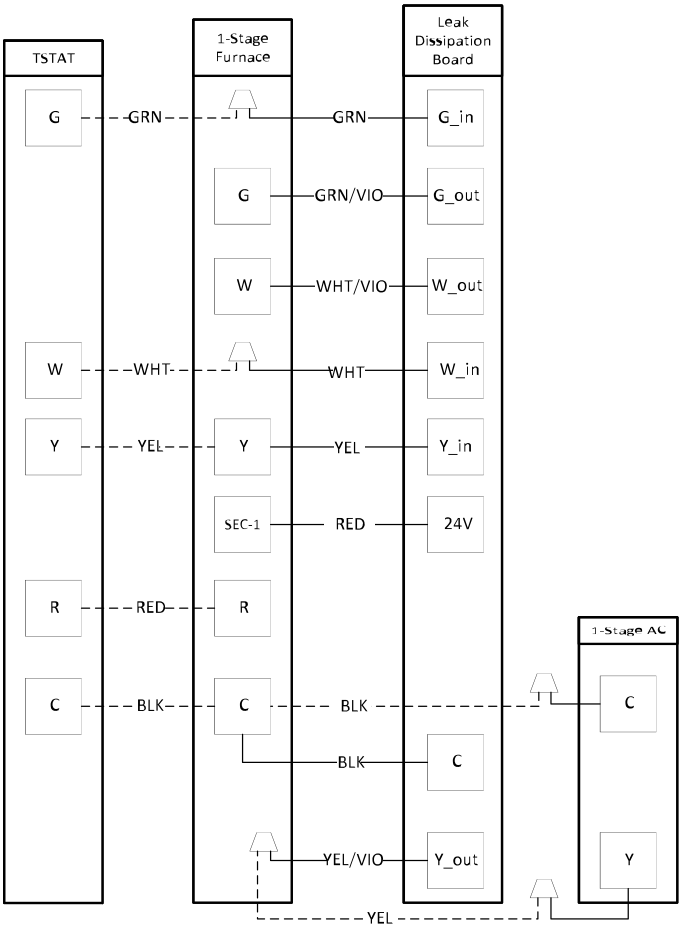

NOTE: If a float switch is used, wire the float switch in the field "R" circuit from the "R" field connection terminal of the furnace leading to the thermostat.

A230458A

Fig. 12 – Wiring Layout, 1-Stage Air Conditioning Unit

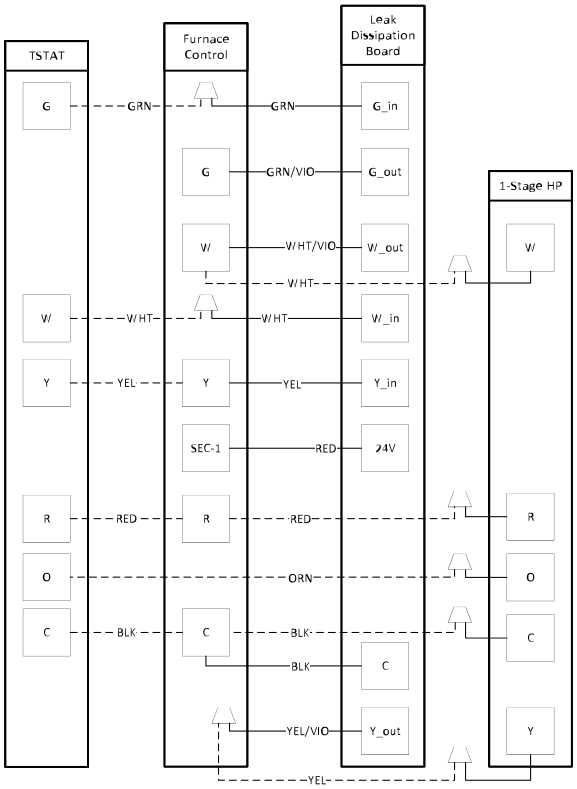

NOTE: If a float switch is used, wire the float switch in the field "R" circuit from the "R" field connection terminal of the furnace leading to the thermostat.

A230459

Fig. 13 – Wiring Layout, 1-Stage Heat Pump Unit

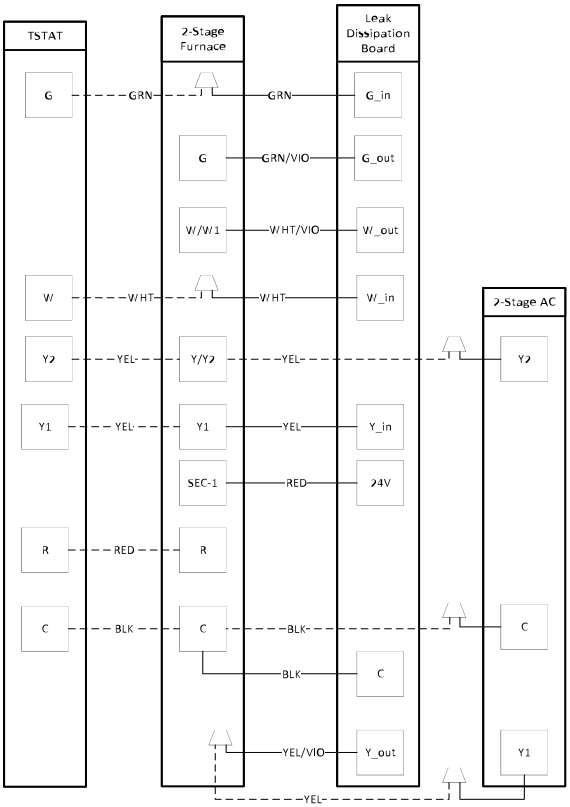

NOTE: If a float switch is used, wire the float switch in the field "R" circuit from the "R" field connection terminal of the furnace leading to the thermostat.

NOTE: For 2-stage gas heating applications, the W2 should be routed according to the furnace instruction manual and not through the dissipation board.

A230460A

Fig. 14 – Wiring Layout, 2-Stage Air Conditioning Unit

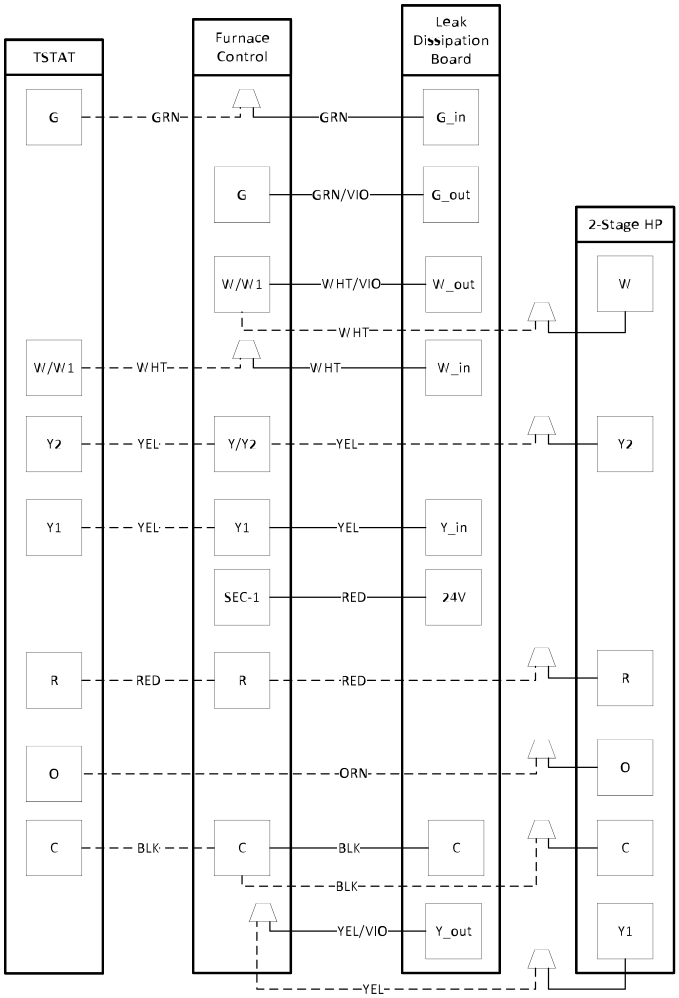

NOTE: If a float switch is used, wire the float switch in the field "R" circuit from the "R" field connection terminal of the furnace leading to the thermostat.

A230461

Fig. 15 – Wiring Layout, 2-Stage Heat Pump Unit

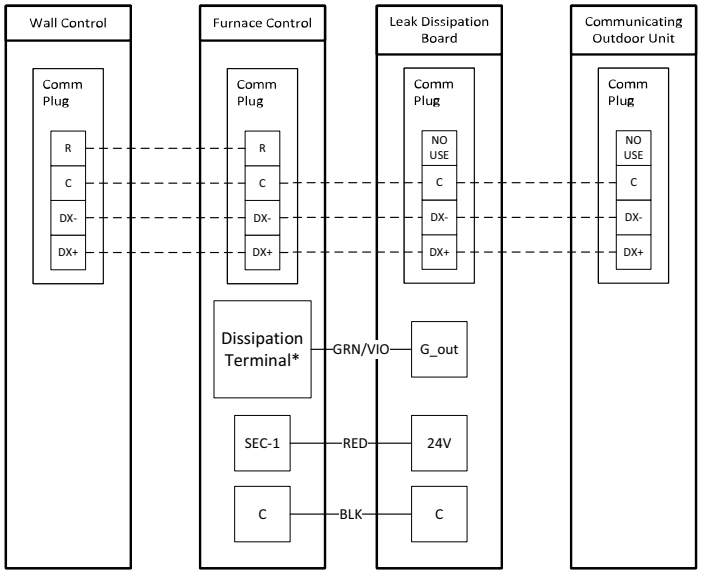

NOTE: Dissipation terminal is only used on communicating furnaces manufactured Q4 2023 and later. Use a 3/16" spade connector on the GRN/VIO wire to connect to the dissipation terminal on communicating furnaces. Attach wire nut to all unused wires from the power harness.

A240005

Fig. 16 – Wiring Layout, Communication Unit

Table 3 – Communication Plug Designations

CCN Plug Connections				
Color	GRN	YEL	WHT	RED
Signal	DX+	DX-	C	NO USE

Leak Dissipation System Installation

WARNING

PERSONAL INJURY HAZARD

Failure to follow this warning could result in property damage, personal injury, or death.

Operational checks to confirm proper dissipation system function must be performed prior to normal operation of the system.

1. After installing evaporator coil and line set, route the sensor cable through the liquid grommet on the fitting door. Ensure that the wire harness has tension relief and does not come into contact with sharp edges.
2. Mount the dissipation board assembly (control board, enclosure bottom, and enclosure top) as close as possible to the furnace control box.
   If drilling, check behind the drill location where mounting the dissipation board assembly to ensure no damage to hidden electrical or mechanical components.
   Mount enclosure in a vertical orientation with the harnesses coming out of the bottom, in a location that is easily accessible, and indicator light is visible.
   a. Do NOT mount control board assembly in a location where it could come into contact with or be exposed to water.
   b. Do NOT mount control board assembly inside of evaporator coil, furnace, or ductwork.
3. Remove control board housing cover and plug in sensor wire harness (4-pin connector) and power wire harness (8-pin connector) to the dissipation control board.
4. Route control board power harness (8 wires) to the furnace control box and make all connections according to wiring diagrams and wiring label.
5. Power on unit and verify proper functioning of equipment. Yellow LED on control board should be steady. If flash codes are present, see the troubleshooting section.

NOTE: For communicating systems, green LED should be on (steady or flashing).

IMPORTANT: Press the Test button for approximately ONE SECOND to enter Test Mode. Pressing the Test button for a longer period can possibly clear all fault code history.

6. Press the Test button on the dissipation system control board to ensure proper dissipation system operation under each test condition listed below (Table 5). After pressing the test button, system will enter dissipation mode for 60 seconds to help verify correct operation.

Table 4 – Dissipation Board Test Button Functions

Hold Button Time (sec)	Function
1 - 4	Dissipation Mode for 60 seconds
5 - 29	Display flash code history
30+	Flash code 6
3 rapid presses	Clear flash code history

7. Ensure that the furnace is able to meet the minimum required dissipation mode airflows. These required minimum airflow rates during dissipation mode are listed in Table 6. They are based on the total system refrigerant charge quantity.
   If the minimum airflow is not achievable by energizing the continuous fan (G terminal), an accessory kit is available to achieve cooling airflow in dissipation mode. Refer to the Accessories section of the Product Data for current kit number.

Table 5 – Required Operational Checks to Ensure Proper Dissipation System Function

Normal Operation				
Test #	**T-Stat Call**	**Compressor**	**Indoor Fan**	**Electric/Gas Heat**
1	None	Off	Off	Off
2	Cool	On	On	Off
3	Heat	Off	On	On
Dissipation Activated				
4	None	Off	On	Off
5	Cool	Off	On	Off
6	Heat	Off	On	Off

Table 6 – Required Minimum Dissipation Mode Airflows, Based on Total System Refrigerant Charge Quantity

Total System Charge (lb)	Minimum Required Dissipation Airflow (CFM)	Total System Charge (lb)	Minimum Required Dissipation Airflow (CFM)
5	133	16	426
6	160	17	452
7	186	18	479
8	213	19	505
9	239	20	532
10	266	21	559
11	293	22	585
12	319	23	612
13	346	24	639
14	372	25	665
15	399		

TROUBLESHOOTING

Sequence of Events — Dissipation Mode

1. Refrigerant leaks.
2. Sensor detects leak.
3. Dissipation board sends system in to Dissipation Mode (energizes G; de-energizes Y and W). Dissipation board displays Flash Code 1 until refrigerant concentration decreases, at which point Flash Code 3 is displayed. (Table 7)
4. Dissipation Mode continues for at least 10 minutes.
5. 5-minute ON delay for system equipment is enabled.
6. System resumes normal operation.

Flash Codes / Actions

For all flash codes, first try power cycling the system to remove the code. Refer to Table 7.

No Power

Verify the wiring to/from pins 1 and 8 on the power harness plug. Check the 24V system wiring from the transformer.

Flashing 1

Check for refrigerant leaks using an independent R-454B detector. If no leaks are present, replace the sensor.

Flashing 2

Check both ends of the sensor wire harness to ensure proper attachment. Power cycle the system to check whether the flash code has been removed. If the flash code is still present, replace the sensor.

Flashing 3

Check for refrigerant leaks using an independent R-454B detector.

Flashing 4

If the code does not clear after power cycling the system, replace the dissipation board.

Flashing 5

If the code does not clear after power cycling the system, replace the sensor.

Flashing 6

Press the test button repeatedly. Power cycle the system. If the button cannot be reset, replace the dissipation board.

Flashing 7

Verify wiring of all "Y" and "W" wires in the applicable wiring diagram.

Flashing 8

Verify wiring of all "Y" and "W" wires in the applicable wiring diagram.

Table 7 – Flash Code Chart

Yellow LED	Reason	Mode
Solid	Normal Operation	Normal Operation
Flashing 1	Sensor >= 20% LFL	Dissipation
Flashing 2	Sensor Open	Dissipation
Flashing 3	Normal Dissipation after Leak	Dissipation
Flashing 4	No Power to G Output	Dissipation with no Blower
Flashing 5	Fault with A2L Digital Sensor	Dissipation
Flashing 6	Test Button Stuck (>30 s)	Dissipation
Flashing 7	Y or W Wiring Inverted	Normal Operation
Flashing 8	Y or W Shorted	Normal Operation

UNIT START-UP

Refer to outdoor unit Installation Instructions for system start-up instructions and refrigerant charging method details.

⚠ CAUTION

UNIT OR PRODUCT DAMAGE HAZARD

Failure to follow this caution may result in unit or product damage.

Never operate the unit without a filter. Damage to the blower motor or coil may result. For those applications where access to an internal filter is impractical, a field supplied filter must be installed in the return duct system.

CARE AND MAINTENANCE

To continue high performance and minimize possible equipment failure, it is essential that periodic maintenance be performed on this equipment. Consult your local dealer as to the proper frequency of maintenance and the availability of a maintenance contract.

The ability to properly perform maintenance on this equipment requires certain mechanical skills and tools. If you do not possess these, contact your dealer for maintenance. The only consumer service recommended or required is filter replacement or cleaning on a monthly basis.

⚠ CAUTION

ENVIRONMENTAL HAZARD

Failure to follow this caution may result in environmental damage.

Remove and recycle all components or materials (i.e., oil, refrigerant, etc.) before unit final disposal.

© 2025 Carrier. All rights reserved.
Edition Date: 10/25
Catalog No: IM-EAA5X-02
A Carrier Company
Replaces: **IM-EAA5X-01**
Manufacturer reserves the right to change, at any time, specifications and designs without notice and without obligations.