PAYNE®
Heating & Cooling

PLUS 80 VARIABLE-SPEED UPFLOW/HORIZONTAL INDUCED COMBUSTION FURNACE

333BAV
333JAV
Sizes 060 thru 120
Series A

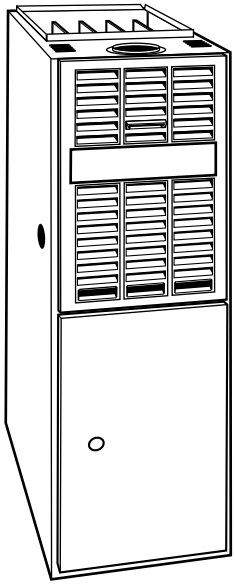

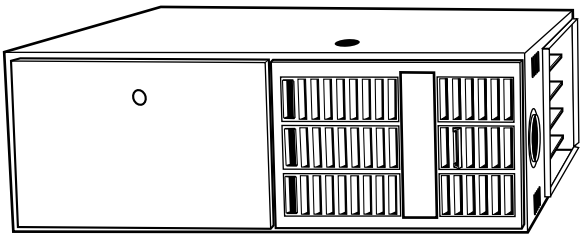

With a unique approach to induced-combustion design, a 40-in. tall cabinet, a 4-pass heat exchanger, an inshot burner system, and its safety features, this furnace is without peer. The Plus 80 Variable-Speed Upflow/Horizontal Furnace achieves an 80% Annual Fuel Utilization Efficiency (AFUE) rating. The benefits of variable-speed operation in reducing sound and improving comfort put it in a class well ahead of the competition. The Plus 80 Variable-Speed has the kind of overall performance needed in today's homes. All models are GAMA efficiency rating certified. The model 333JAV furnaces are certified for use in California Air Quality Management Districts.

FEATURES

EFFICIENCY—The Plus 80 Variable-Speed Induced-Combustion Gas Furnace provides the efficiency customers want with 80.0% AFUE and improves air conditioner or heat pump performance up to 1-1/2 points.

HOT SURFACE IGNITION—No pilot to waste gas with this field-proven ignition system.

ALUMINIZED HEAT EXCHANGER—The patented 4-pass heat exchanger is made of aluminized steel and backed by a 20-year Limited Warranty.

INTELLIGENT CONTROL—The Plus 80 Variable-Speed has an intelligent control that monitors the operation of the furnace. This control also has a component-test feature that enables the servicing technician to verify operation of the control, the high and low inducer speeds, the hot surface ignitor, and high-, medium-, and low-speed blower operation. The control features a 3-amp fuse that protects the transformer and control. We guarantee the reliability of the control with a 3-year Limited Warranty.

40-IN. HEIGHT—The Plus 80 Variable-Speed cabinet height is only 40 in. This simplifies installation in alcoves, attics, basements (ideal for short basement), closets, and utility rooms, especially with a taller high-efficiency cooling coil.

PREPAINTED CABINET—The Plus 80 Variable-Speed uses prepainted sheet metal for the cabinet. This is the same high-quality finish found on refrigerators and other appliances today. We ensure its durability by using a galvanized steel substrate to provide superior rust protection.

PATENTED DRAFT SAFEGUARD—Our induced-combustion furnace has a patented draft safeguard switch. The safeguard switch will stop furnace operation if the vent system becomes blocked or is not operating properly.

EASY INSTALLATION—The Plus 80 Variable-Speed has many features that make installation easier: left or right gas and electrical connections, heating and cooling airflow selector, matching coil sizes, accessory low-voltage connections, and many more.

QUIET OPERATION—A soft mount inducer assembly and 2-stage slow-opening gas valve reduce sound level. The 2-stage heating operation capability minimizes furnace and air noise for total home comfort.

Form No. PDS 333B.60.2P

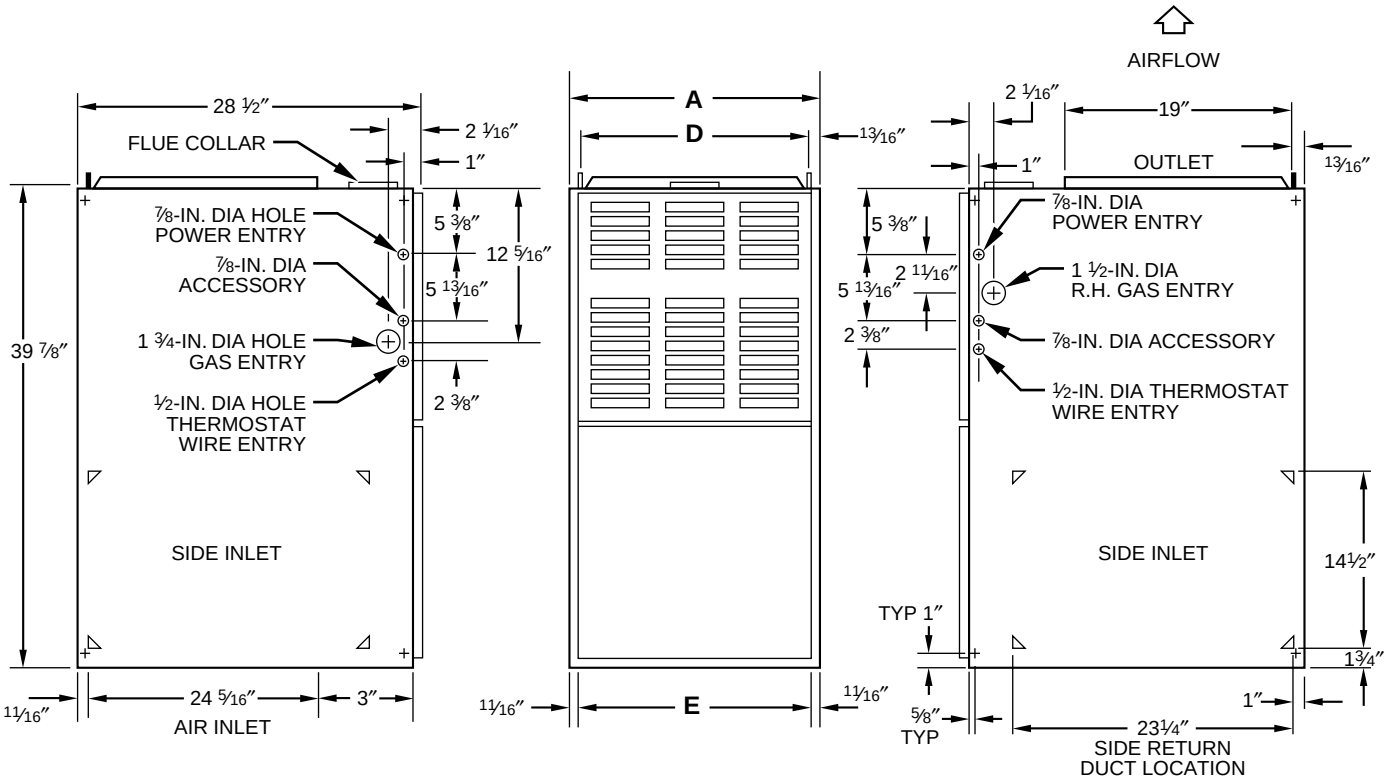

NOTES: 1. Two additional 7/8-in. dia knockouts are located in the top plate.
2. Minimum return-air opening at furnace:
   a. For 800 CFM–16-in. round or 14½ x 12-in. rectangle.
   b. For 1200 CFM–20-in. round or 14½ x 19½-in. rectangle.
   c. For 1600 CFM–22-in. round or 14½ x 23¼-in. rectangle.
   d. For airflow requirements above 1800 CFM, use both side inlets, a combination of 1 side inlet and the bottom, or the bottom only.

A88367

DIMENSIONS (In.)

UNIT SIZE	A	D	E	VENT CONNECTION*	SHIPPING WEIGHT (LB)
036060	14-3/16	12-9/16	12-11/16	4	134
048080	21	19-3/8	19-1/2	4	154
060100	24-1/2	22-7/8	23	4	184
060120	24-1/2	22-7/8	23	5	194

* Refer to the furnace Installation Instructions for proper venting procedures.

DIMENSIONAL DRAWINGS OF OPTIONAL SIDE FILTER RACK

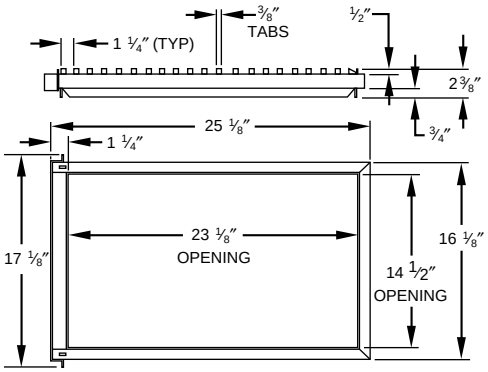

A80199

SPECIFICATIONS

UNIT SIZE		036060††	048080	060100	060120
RATINGS AND PERFORMANCE					
Gas Input (Btuh)*	High Stage	60,000	80,000	100,000	117,000
	Low Stage	39,000	52,000	65,000	78,000
Output Capacity (Btuh)†	High Stage	49,000	65,000	82,000	96,000
Nonweatherized ICS	Low Stage	31,000	42,000	53,000	63,000
AFUE%†	Nonweatherized ICS	80.0	80.0	80.0	80.0
Certified Temperature Rise	High Stage	25—55	30—60	25—55	40—70
Range (°F)	Low Stage	15—45	15—45	15—45	25—55
Certified External Static Pressure	Heat/Cool	0.12/0.70	0.15/0.50	0.20/0.70	0.20/0.70
Airflow CFM‡	High/Low	1250/1135	1310/1395	1935/1630	1720/1605
	Cooling (Max)	1260	1635	2085	2010
ELECTRICAL					
Unit Volts—Hertz—Phase		115—60—1			
Operating Voltage Range		104—127			
Maximum Unit Amps		10.1	10.6	12.6	13.9
Maximum Wire Length (Measured 1 Way)	Ft	36	34	29	26
Minimum Wire Size		14	14	14	14
Maximum Fuse Size		15	15	15	15
Transformer (24v)		40va			
External Control	Heating	19va			
Power Available	Cooling	35va			
Air Conditioning Blower Relay		Standard			
CONTROLS					
Limit Control		SPST (Auto-Reset)			
Heating Blower Control		Solid-State Time Operation			
Inducer		2-Speed			
Burners (Monoport)		3	4	5	6
Gas Connection Size		1/2-in. NPT			
GAS CONTROLS					
2-Stage Redundant Gas Valve		White-Rodgers			
	Min Inlet Pressure (In. wc)	4.5 (Natural Gas)			
	Max Inlet Pressure (In. wc)	13.6 (Natural Gas)			
Ignition Device		Hot Surface			
BLOWER DATA					
Direct-Drive Motor HP (ICM Variable Speed)		1/2	1/2	3/4	1
Motor Full Load Amps		7.7	7.7	9.6	12.0
RPM (Nominal)—Speeds		300 to 1400	300 to 1400	300 to 1400	300 to 1400
Blower Wheel Diameter x Width (In.)		10 x 6	10 x 8	11 x 10	11 x 10
Filter Size (In.)—Permanent Washable (Supplied)		(1) 16 x 25 x 1	(1) 20 x 25 x 1	(2) 16 x 25 x 1	(2) 16 x 25 x 1
FACTORY-AUTHORIZED DEALER-INSTALLED ACCESSORIES					
High-Altitude Pressure Switch Kit**		KGAHA5701PSW			
Gas Conversion Kit—Natural-to-Propane		KGANP24012SP			
Gas Conversion Kit—Propane-to-Natural		KGAPN20012SP			
Electronic Air Cleaner		Model 901KAX			
Humidifier		Model 913BAX			
Thermostat		See Thermostat Price Page			
Sidewall Power Venter Kit		KGASW03012SP			
Side Filter Rack (Accepts 1 Filter)††	In.	KGAFR0201ALL (Filter Size 16 x 25 x 1)			
Return Filter Cabinet (With 2 Washable Filters	In.	KGARP0201ALL (Filter Size 20 x 25 x 1)			

* Gas input ratings are certified for elevations to 2000 ft. For elevations above 2000 ft, reduce ratings 4% for each 1000 ft above sea level. Refer to National Fuel Gas Code Table F4. In Canada, derate the unit 10% for elevations 2000 ft to 4500 ft above sea level.

† Capacity and AFUE in accordance with U.S. Government DOE test procedures.

‡ Air delivery above 1800 CFM requires that both sides, or a combination of 1 side and bottom, or bottom only of the furnace be used for return air. A filter is required for each return-air inlet.

** 5500 ft and higher above sea level.

†† Side filter rack must be used for upflow right-side return with 036060 size.

ICS—Isolated Combustion System

CLEARANCES FROM COMBUSTIBLE MATERIALS (In.)

UNIT SIZE		060	080-120
UPFLOW			
Furnace Sides	Single-Wall Vent	1	0
	Type B-1 Double-Wall Vent	0	0
Furnace Back		0	0
Plenum Top		1	1
Furnace Front	Single-Wall Vent	6	6
(See Notes)	Type B-1 Double-Wall Vent	3	3
Vent	Single-Wall Vent	6	6
	Type B-1 Double-Wall Vent	1	1
HORIZONTAL POSITION (IN ALCOVE, ATTIC, OR CRAWLSPACE)			
Sides*‡		1	1
Back		0	0
Top	Single-Wall Vent	1	1
	Type B-1 Double-Wall Vent	1	1
Furnace Front†	Single-Wall Vent	6	6
(See Notes)	Type B-1 Double-Wall Vent	3	3
Vent	Single-Wall Vent	6	6
	Type B-1 Double-Wall Vent	1	1
HORIZONTAL POSITION (IN CLOSET)			
Sides*‡		1	1
Back		0	0
Top	Single-Wall Vent	2	2
	Type B-1 Double-Wall Vent	2	2
Furnace Front	Single-Wall vent	6	6
(See Notes)	Type B-1 Double-Wall Vent	3	3
Vent	Single-Wall Vent	6	6
	Type B-1 Double-Wall Vent	1	1

* Clearance shown is for the outlet end. The inlet end must maintain 6 in. clearance from flue to combustible materials when using single-wall vent.
† 18-in. front clearance required for alcove.
‡ Indicates supply or return sides when furnace is in the horizontal position.

NOTES:
1. Provide 30-in. front clearance for servicing. An open door in front of the furnace can meet this requirement.
2. A minimum clearance of 3 in. must be provided in front of the furnace for combustion air and proper operation.

MEETS DOE RESIDENTIAL CONSERVATION SERVICES PROGRAM STANDARDS.

Before purchasing this appliance, read important energy cost and efficiency information available from your retailer.

AIR DELIVERY—NOMINAL CFM (With filter)

GAS HEAT AIRFLOW

FURNACE SIZE	GAS HEAT TEMP RISE JUMPER POSITION‡		GAS HEAT TEMP RISE (°F)*		GAS HEAT AIRFLOW (CFM)	
	Red Wire	Violet Wire	HIGH-STAGE	LOW-STAGE	HIGH-STAGE	LOW-STAGE
060	HI	A	51	45	925	615
	M-HI	A	46	38	1085	730
	MID	D	40	30	1250	1135
080	HI	A	58	44	970	790
	M-HI	A	51	39	1140	925
	MID	D	45	29	1310	1395
100	HI	A	51	44	1430	1035
	M-HI	A	45	39	1685	1215
	MID	D	40	30	1935	1630
120	HI	A	69	49	1330	1240
	M-HI	A	59	43	1560	1460
	MID	D	55	40	1720	1605

AC/HP JUMPER POSITION: AC AIR CONDITIONING, COOLING AIRFLOW
HP—EFFY HEAT PUMP—EFFICIENCY, COOLING AND HEATING AIRFLOW
HP—CFMT HEAT PUMP—COMFORT, COOLING AIRFLOW

FURNACE SIZE	AIRFLOW SELECTION		SINGLE-SPEED CFM			TWO-SPEED (HIGH / LOW) CFM					
	COOL SIZE		COOL CFM PER TON			COOL CFM PER TON JUMPER POSITION					
	JUMPER		JUMPER POSITION			400		350		315	
	POSITION	TONS	400	350	315	HIGH	LOW	HIGH	LOW	HIGH	LOW
060	LO	1-1/2	600	530	500†	630	500†	550	500†	500†	500†
	M-LO	2	800	700	630	865	510	735	500†	660	500†
	M-HI	2-1/2	1000	880	790	1060	650	920	570	825	510
	HI	3	1200	1050	945	1260	780	1100	680	990	585
080	LO	2-1/2	1000	875	790	1050	660	920	595	830	545
	M-LO	3	1215	1050	945	1260	790	1100	700	990	625
	M-HI	3-1/2	1400	1225	1100	1470	910	1280	805	1155	715
	HI	4	1600	1400	1250	1635	1040	1470	915	1325	820
100	LO	3	1195	1045	950	1260	780	1090	775	990	700†
	M-LO	3-1/2	1400	1225	1090	1470	910	1285	830	1155	715
	M-HI	4	1600	1400	1260	1680	1040	1465	915	1325	820
	HI	5	2000	1750	1575	2085	1300	1840	1150	1655	1025
120	LO	3	1160	1050	955	1195	865	1085	785	985	785
	M-LO	3-1/2	1400	1220	1090	1420	970	1265	875	1150	845
	M-HI	4	1600	1395	1250	1650	1070	1465	975	1315	930
	HI	5	2000	1750	1565	2110	1300	1835	1140	1640	1080

AC/HP JUMPER POSITION: HP—CMFT HEAT PUMP—COMFORT, HEATING AIRFLOW

FURNACE SIZE	AIRFLOW SELECTION		SINGLE-SPEED CFM			TWO-SPEED (HIGH / LOW) CFM					
	COOL SIZE		COOL CFM PER TON			COOL CFM PER TON JUMPER POSITION					
	JUMPER		JUMPER POSITION			400		350		315	
	POSITION	TONS	400	350	315	HIGH	LOW	HIGH	LOW	HIGH	LOW
060	LO	1-1/2	540	500†	500†	565	500†	500†	500†	500†	500†
	M-LO	2	720	630	570	780	500†	660	500†	595	500†
	M-HI	2-1/2	900	790	710	945	585	830	515	740	500†
	HI	3	1080	945	855	1135	700	990	610	895	555
080	LO	2-1/2	900	785	710	945	605	825	535	755	500†
	M-LO	3	1080	945	850	1135	715	990	630	895	560
	M-HI	3-1/2	1260	1100	990	1325	830	1150	725	1040	655
	HI	4	1440	1260	1135	1510	940	1325	825	1190	740
100	LO	3	1075	940	855	1130	700	980	700	890	700†
	M-LO	3-1/2	1260	1100	990	1325	820	1155	750	1040	700†
	M-HI	4	1440	1260	1130	1510	935	1320	825	1190	740
	HI	5	1800	1575	1420	1890	1170	1655	1035	1490	920
120	LO	3	1045	945	860	1075	780	975	750	885	750
	M-LO	3-1/2	1260	1100	980	1280	875	1140	790	1035	760
	M-HI	4	1440	1255	1125	1485	965	1320	880	1185	835
	HI	5	1800	1575	1410	1900	1170	1650	1025	1475	970

* Within ± 2°F
† Minimum airflow is set for electronic air cleaner: 060—500 CFM, 080—500 CFM, 100—700 CFM, 120—700 CFM
‡ Use only listed jumper position combinations.

NOTES:
1. A humidistat can be used to further reduce airflow when increased humidity is sensed. This feature reduces the selected airflow by 20%, but no lower than 280 CFM per ton.
2. Continuous-fan selections are 50%, 65%, or 100% of selected cooling airflow. 100% is not recommended for 2-speed air conditioning or heat pumps.†
3. See the following airflow curves for CFM versus ESP at 350 CFM per ton.

The airflow performance charts for the model 333BAV and 333JAV Furnaces provide nominal airflow in cubic ft per minute (CFM) versus external static pressure (ESP) in in. water column (IWC) for gas heating, cooling, and heat pump operating modes. Each model has 2 chart pages: gas heating and single-speed cooling on the first page, and 2-speed cooling on the second page. Gas heating airflow is shown with dashed lines for HIGH-GAS HEAT and with dot-dash lines for LOW-GAS HEAT for all 3 air temperature rise selections. Single-speed cooling airflow is shown with solid lines for all 4 size selections. Two-speed airflow is shown with solid lines for HIGH-COOLING and with dot-dash for lines LOW-COOLING for all 4 size selections.

The curved, dotted lines are furnace-duct system characteristic curves. System curves can be used to predict the ESP imposed by a building's supply and return air duct system at any airflow, if a single actual airflow CFM versus ESP is known.

Example: If CFM and ESP at point A in example below are known, the CFM and ESP at point B can be determined by following the system curve from A to B. If a point falls between 2 system curves, follow an imaginary system curve parallel to and between the 2 system curves.

EXAMPLE AIRFLOW (CFM versus ESP)

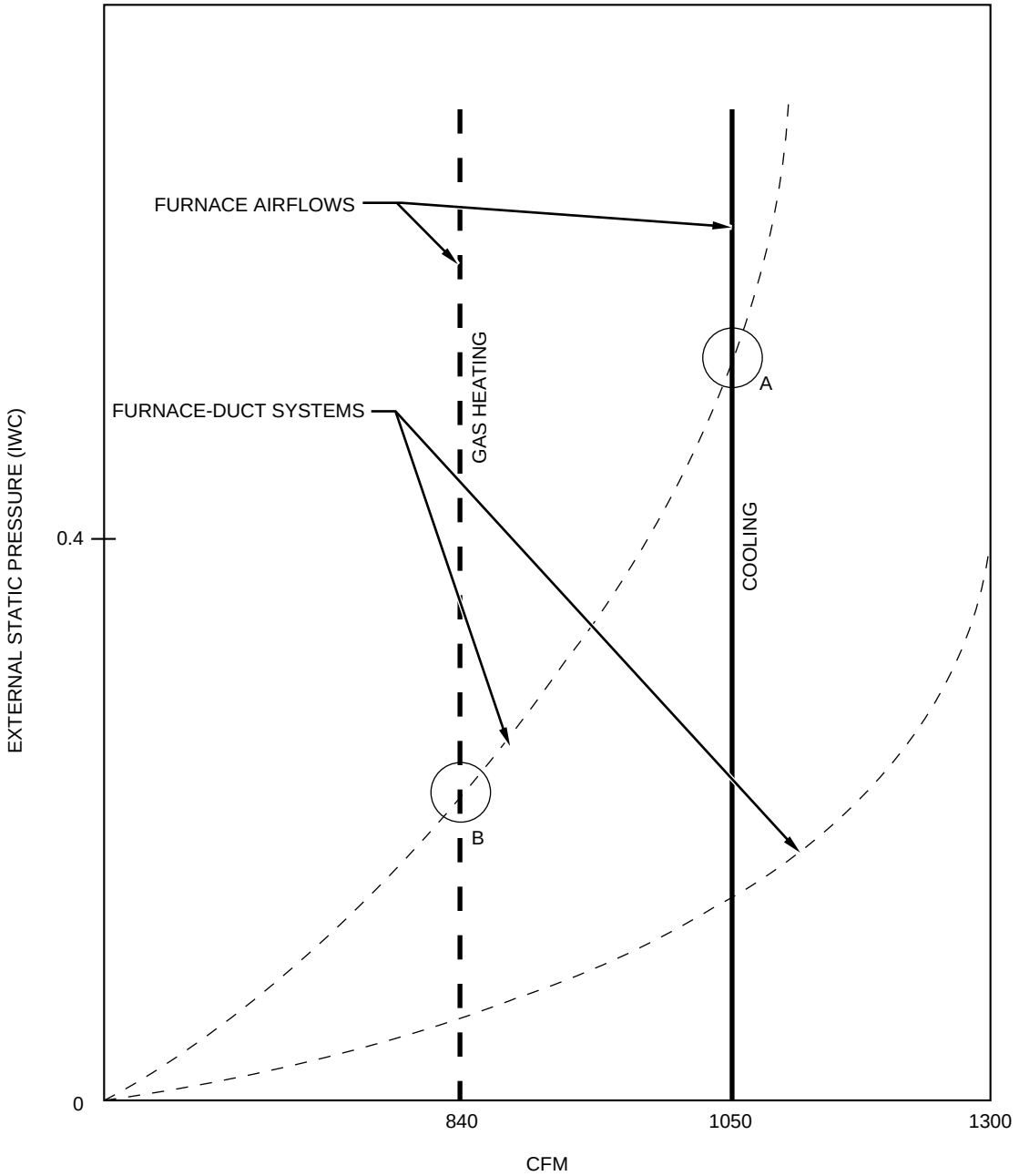

A96033

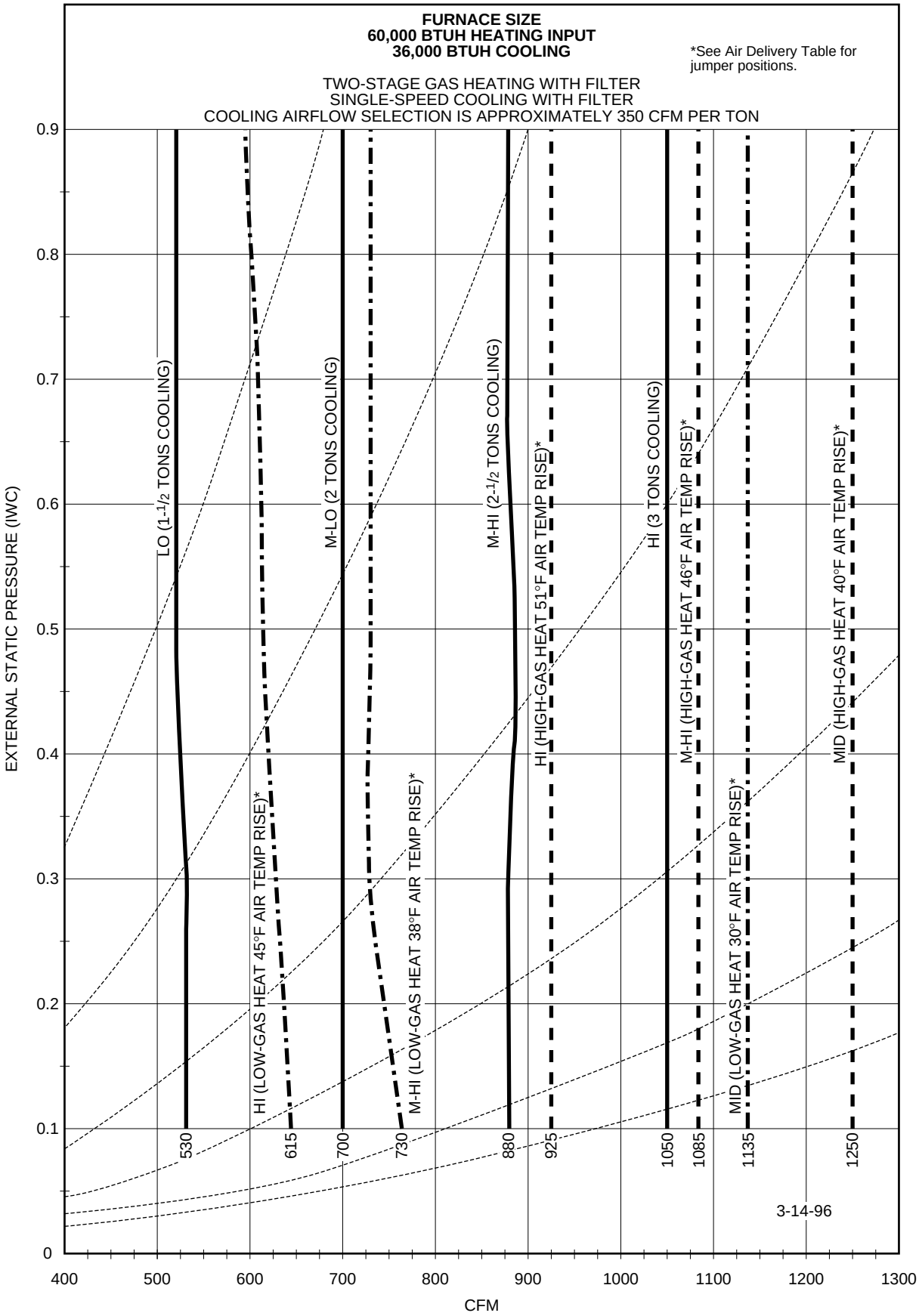
FURNACE SIZE
60,000 BTUH HEATING INPUT
36,000 BTUH COOLING
*See Air Delivery Table for jumper positions.
TWO-STAGE GAS HEATING WITH FILTER
SINGLE-SPEED COOLING WITH FILTER
COOLING AIRFLOW SELECTION IS APPROXIMATELY 350 CFM PER TON
EXTERNAL STATIC PRESSURE (IWC)
0
0.1
0.2
0.3
0.4
0.5
0.6
0.7
0.8
0.9
400
500
600
700
800
900
1000
1100
1200
1300
CFM
LO (1-1/2 TONS COOLING)
HI (LOW-GAS HEAT 45°F AIR TEMP RISE)*
M-LO (2 TONS COOLING)
M-HI (LOW-GAS HEAT 38°F AIR TEMP RISE)*
M-HI (2-1/2 TONS COOLING)
HI (HIGH-GAS HEAT 51°F AIR TEMP RISE)*
HI (3 TONS COOLING)
M-HI (HIGH-GAS HEAT 46°F AIR TEMP RISE)*
MID (LOW-GAS HEAT 30°F AIR TEMP RISE)*
MID (HIGH-GAS HEAT 40°F AIR TEMP RISE)*
530
615
700
730
880
925
1050
1085
1135
1250
3-14-96

A96019

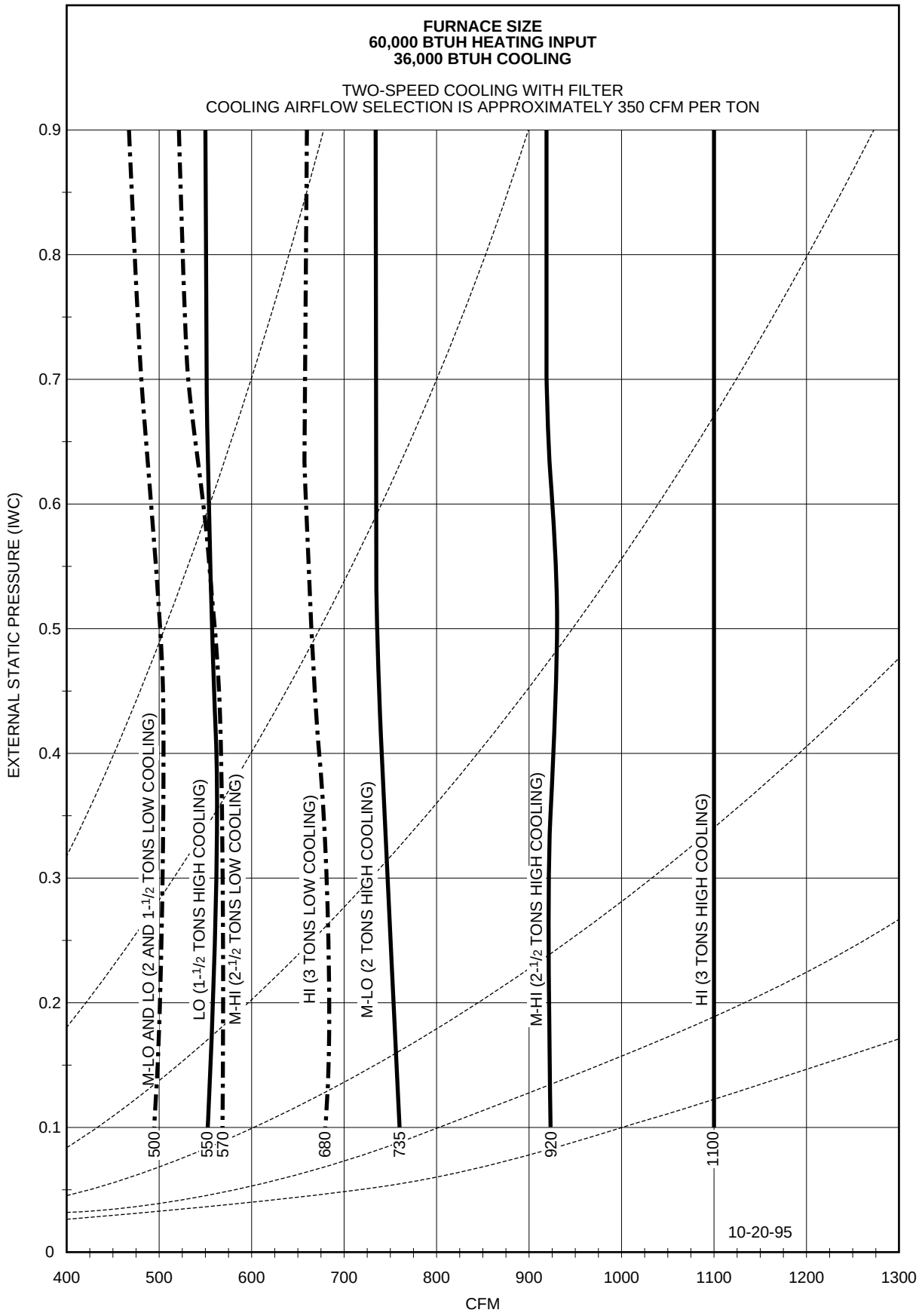
FURNACE SIZE
60,000 BTUH HEATING INPUT
36,000 BTUH COOLING
TWO-SPEED COOLING WITH FILTER
COOLING AIRFLOW SELECTION IS APPROXIMATELY 350 CFM PER TON
EXTERNAL STATIC PRESSURE (IWC)
0
0.1
0.2
0.3
0.4
0.5
0.6
0.7
0.8
0.9
400
500
600
700
800
900
1000
1100
1200
1300
CFM
M-LO AND LO (2 AND 1-1/2 TONS LOW COOLING)
LO (1-1/2 TONS HIGH COOLING)
M-HI (2-1/2 TONS LOW COOLING)
HI (3 TONS LOW COOLING)
M-LO (2 TONS HIGH COOLING)
M-HI (2-1/2 TONS HIGH COOLING)
HI (3 TONS HIGH COOLING)
500
550
570
680
735
920
1100
10-20-95

A96020

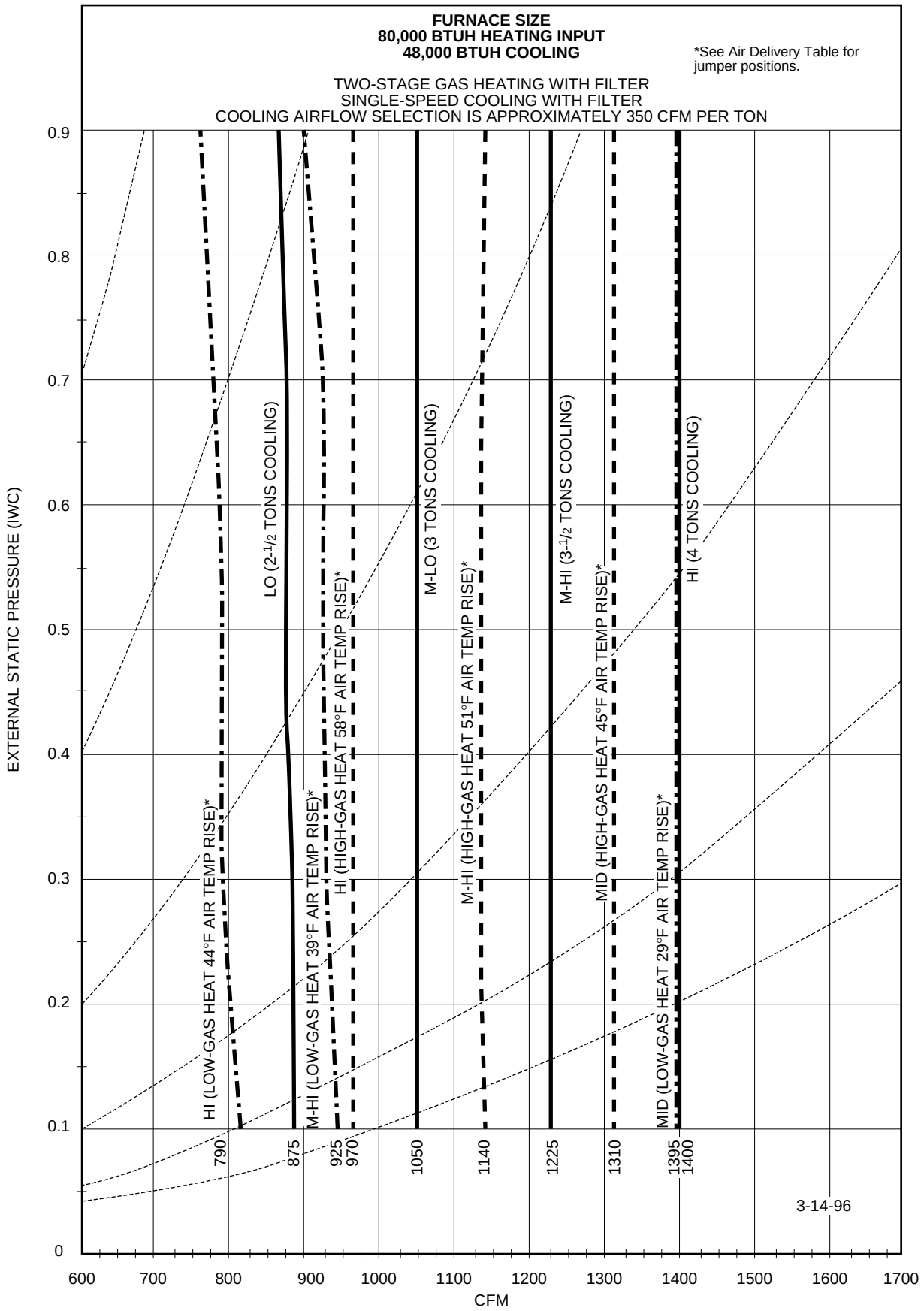
FURNACE SIZE
80,000 BTUH HEATING INPUT
48,000 BTUH COOLING
*See Air Delivery Table for jumper positions.
TWO-STAGE GAS HEATING WITH FILTER
SINGLE-SPEED COOLING WITH FILTER
COOLING AIRFLOW SELECTION IS APPROXIMATELY 350 CFM PER TON
EXTERNAL STATIC PRESSURE (IWC)
0
0.1
0.2
0.3
0.4
0.5
0.6
0.7
0.8
0.9
CFM
600
700
800
900
1000
1100
1200
1300
1400
1500
1600
1700
HI (LOW-GAS HEAT 44°F AIR TEMP RISE)*
LO (2-1/2 TONS COOLING)
M-HI (LOW-GAS HEAT 39°F AIR TEMP RISE)*
HI (HIGH-GAS HEAT 58°F AIR TEMP RISE)*
M-LO (3 TONS COOLING)
M-HI (HIGH-GAS HEAT 51°F AIR TEMP RISE)*
M-HI (3-1/2 TONS COOLING)
MID (HIGH-GAS HEAT 45°F AIR TEMP RISE)*
HI (4 TONS COOLING)
MID (LOW-GAS HEAT 29°F AIR TEMP RISE)*
790
875
925
970
1050
1140
1225
1310
1395
1400
3-14-96

A96021

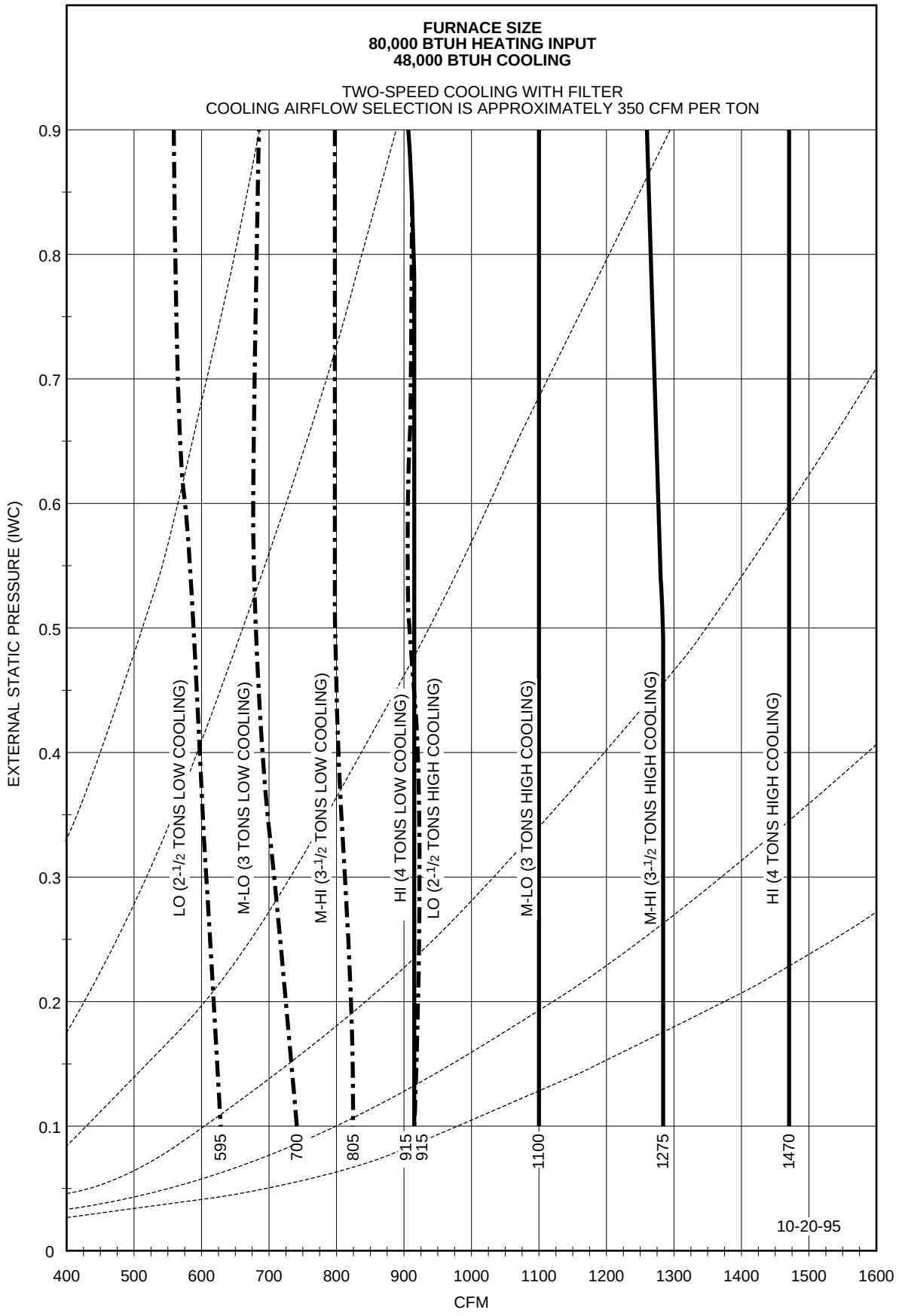
FURNACE SIZE
80,000 BTUH HEATING INPUT
48,000 BTUH COOLING
TWO-SPEED COOLING WITH FILTER
COOLING AIRFLOW SELECTION IS APPROXIMATELY 350 CFM PER TON
EXTERNAL STATIC PRESSURE (IWC)
0
0.1
0.2
0.3
0.4
0.5
0.6
0.7
0.8
0.9
400
500
600
700
800
900
1000
1100
1200
1300
1400
1500
1600
CFM
LO (2-1/2 TONS LOW COOLING)
M-LO (3 TONS LOW COOLING)
M-HI (3-1/2 TONS LOW COOLING)
HI (4 TONS LOW COOLING)
LO (2-1/2 TONS HIGH COOLING)
M-LO (3 TONS HIGH COOLING)
M-HI (3-1/2 TONS HIGH COOLING)
HI (4 TONS HIGH COOLING)
595
700
805
915
915
1100
1275
1470
10-20-95

A96022

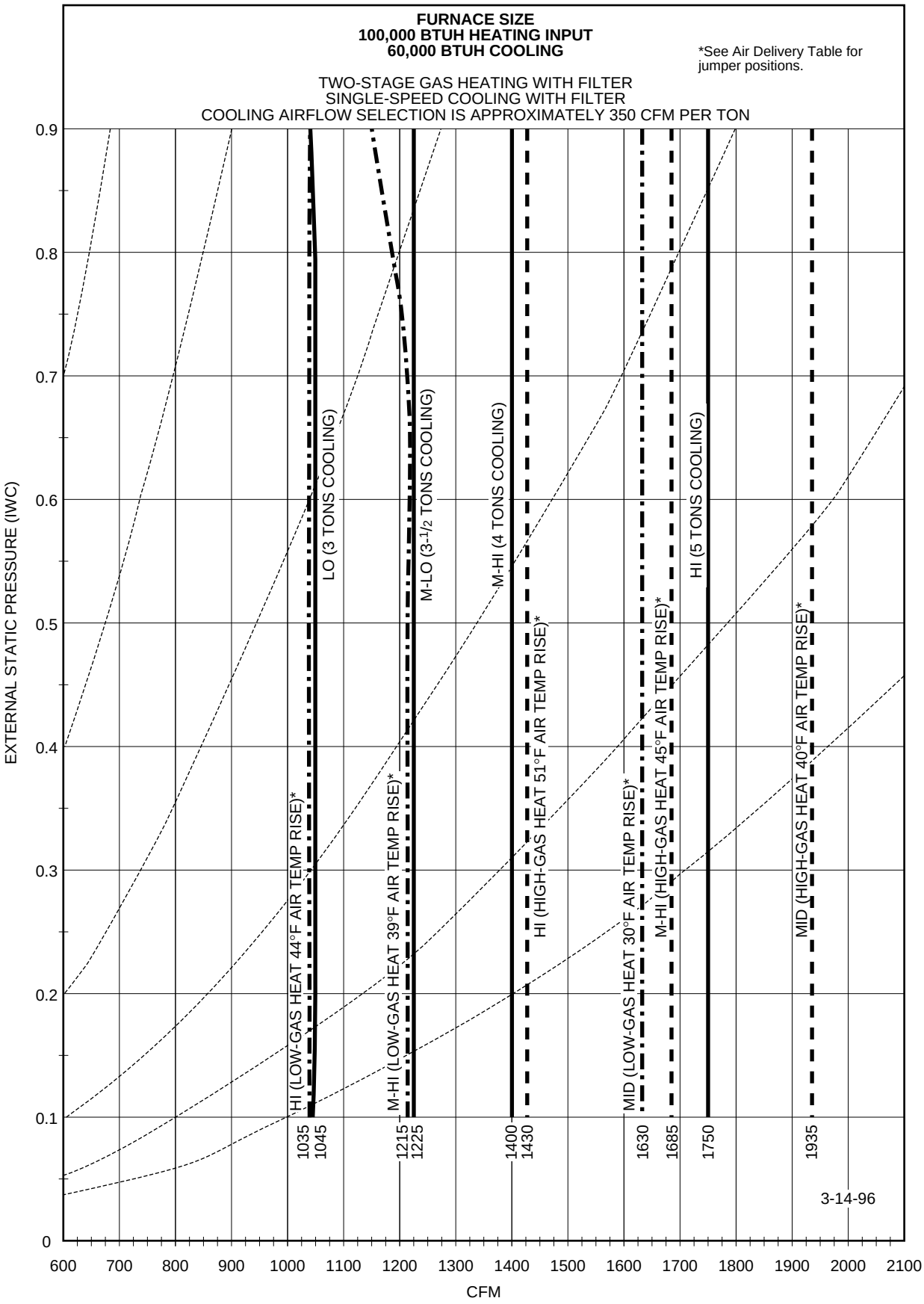
FURNACE SIZE
100,000 BTUH HEATING INPUT
60,000 BTUH COOLING
*See Air Delivery Table for jumper positions.
TWO-STAGE GAS HEATING WITH FILTER
SINGLE-SPEED COOLING WITH FILTER
COOLING AIRFLOW SELECTION IS APPROXIMATELY 350 CFM PER TON
EXTERNAL STATIC PRESSURE (IWC)
0
0.1
0.2
0.3
0.4
0.5
0.6
0.7
0.8
0.9
600
700
800
900
1000
1100
1200
1300
1400
1500
1600
1700
1800
1900
2000
2100
CFM
HI (LOW-GAS HEAT 44°F AIR TEMP RISE)*
LO (3 TONS COOLING)
M-HI (LOW-GAS HEAT 39°F AIR TEMP RISE)*
M-LO (3-1/2 TONS COOLING)
M-HI (4 TONS COOLING)
HI (HIGH-GAS HEAT 51°F AIR TEMP RISE)*
MID (LOW-GAS HEAT 30°F AIR TEMP RISE)*
M-HI (HIGH-GAS HEAT 45°F AIR TEMP RISE)*
HI (5 TONS COOLING)
MID (HIGH-GAS HEAT 40°F AIR TEMP RISE)*
1035
1045
1215
1225
1400
1430
1630
1685
1750
1935
3-14-96

A96023

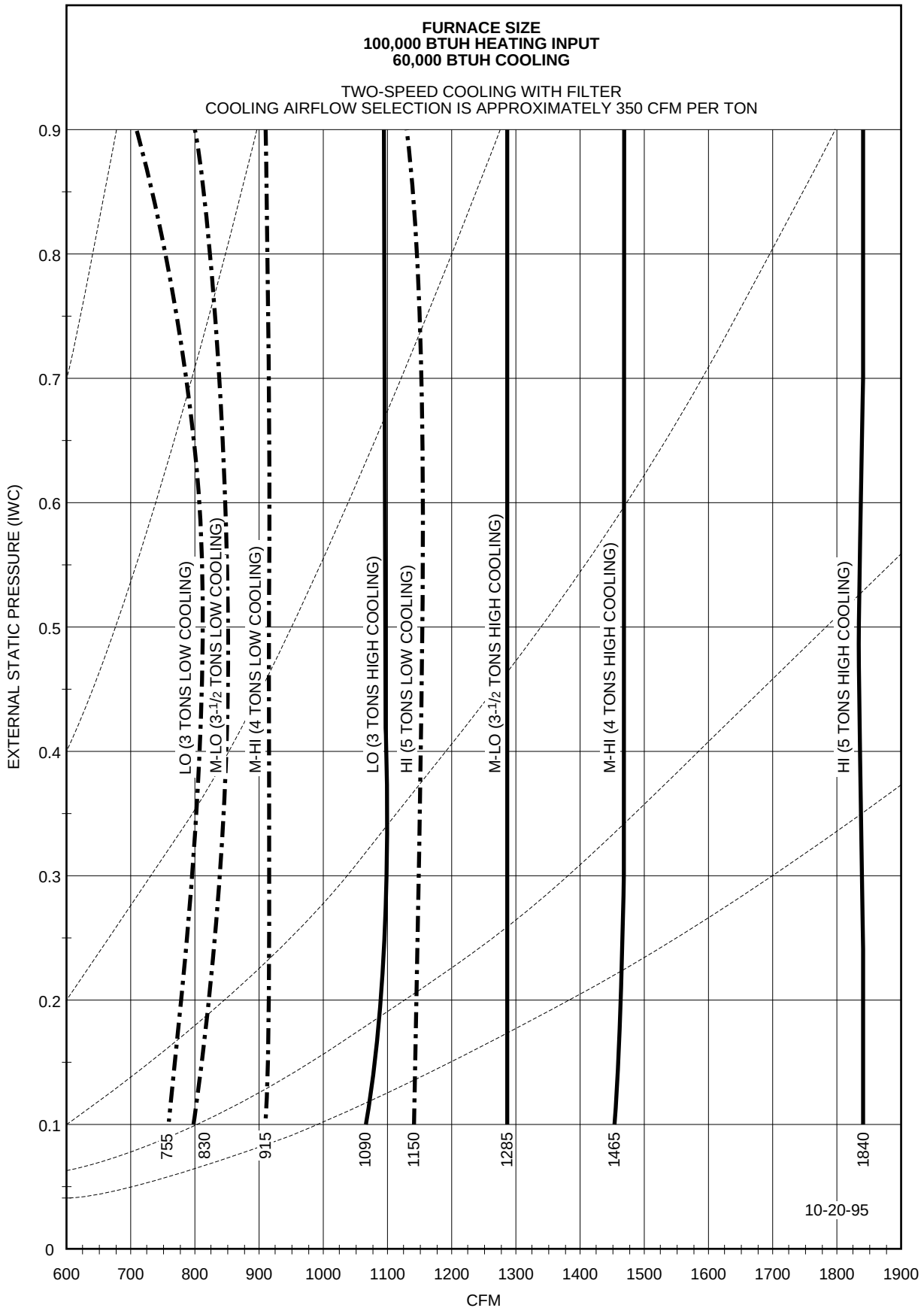
FURNACE SIZE
100,000 BTUH HEATING INPUT
60,000 BTUH COOLING
TWO-SPEED COOLING WITH FILTER
COOLING AIRFLOW SELECTION IS APPROXIMATELY 350 CFM PER TON
EXTERNAL STATIC PRESSURE (IWC)
0
0.1
0.2
0.3
0.4
0.5
0.6
0.7
0.8
0.9
600
700
800
900
1000
1100
1200
1300
1400
1500
1600
1700
1800
1900
CFM
LO (3 TONS LOW COOLING)
M-LO (3-1/2 TONS LOW COOLING)
M-HI (4 TONS LOW COOLING)
LO (3 TONS HIGH COOLING)
HI (5 TONS LOW COOLING)
M-LO (3-1/2 TONS HIGH COOLING)
M-HI (4 TONS HIGH COOLING)
HI (5 TONS HIGH COOLING)
755
830
915
1090
1150
1285
1465
1840
10-20-95

A96024

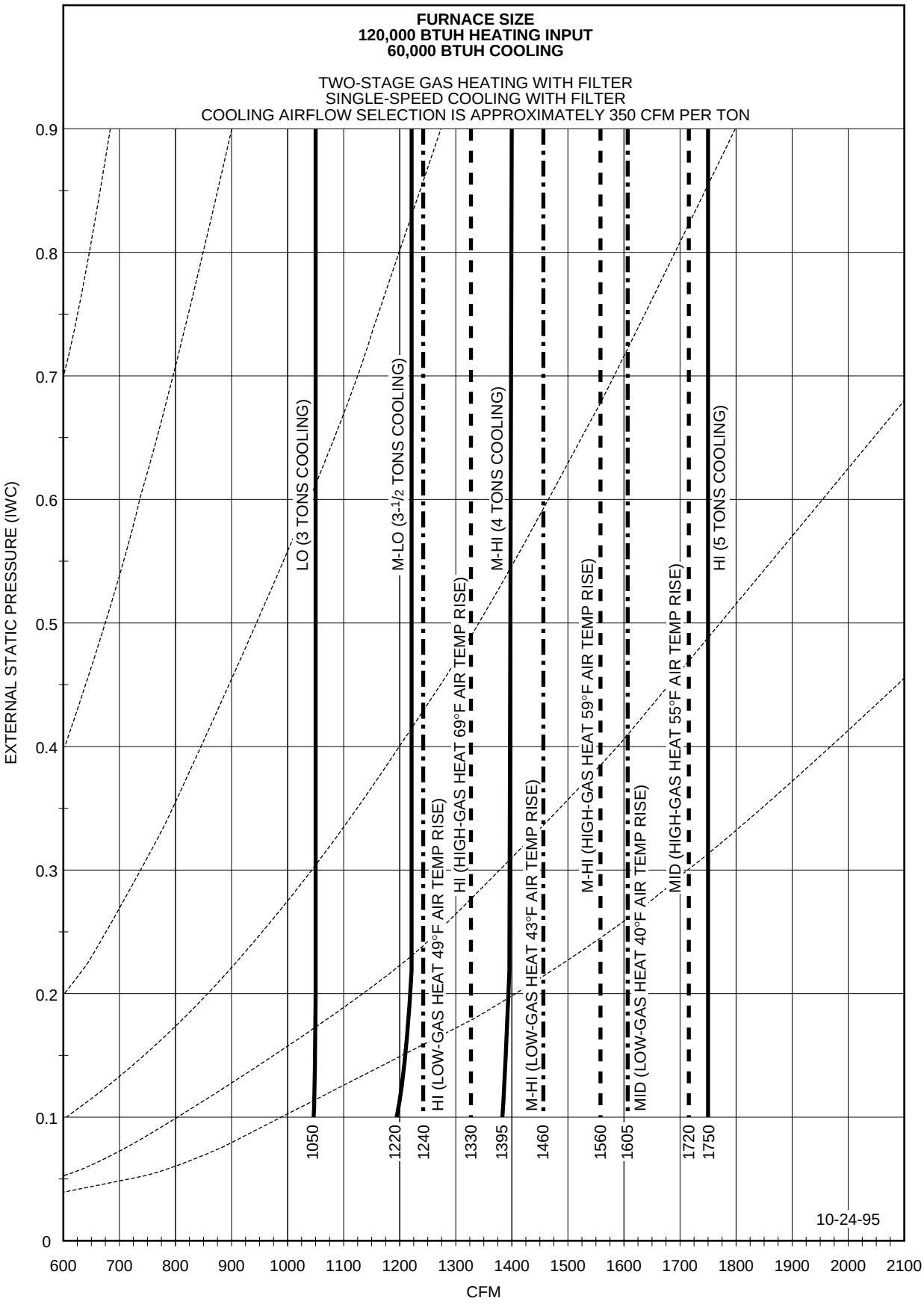
FURNACE SIZE
120,000 BTUH HEATING INPUT
60,000 BTUH COOLING
TWO-STAGE GAS HEATING WITH FILTER
SINGLE-SPEED COOLING WITH FILTER
COOLING AIRFLOW SELECTION IS APPROXIMATELY 350 CFM PER TON
EXTERNAL STATIC PRESSURE (IWC)
0
0.1
0.2
0.3
0.4
0.5
0.6
0.7
0.8
0.9
CFM
600
700
800
900
1000
1100
1200
1300
1400
1500
1600
1700
1800
1900
2000
2100
LO (3 TONS COOLING)
M-LO (3-1/2 TONS COOLING)
M-HI (4 TONS COOLING)
HI (5 TONS COOLING)
HI (LOW-GAS HEAT 49°F AIR TEMP RISE)
HI (HIGH-GAS HEAT 69°F AIR TEMP RISE)
M-HI (LOW-GAS HEAT 43°F AIR TEMP RISE)
M-HI (HIGH-GAS HEAT 59°F AIR TEMP RISE)
MID (LOW-GAS HEAT 40°F AIR TEMP RISE)
MID (HIGH-GAS HEAT 55°F AIR TEMP RISE)
1050
1220
1240
1330
1395
1460
1560
1605
1720
1750
10-24-95

A96025

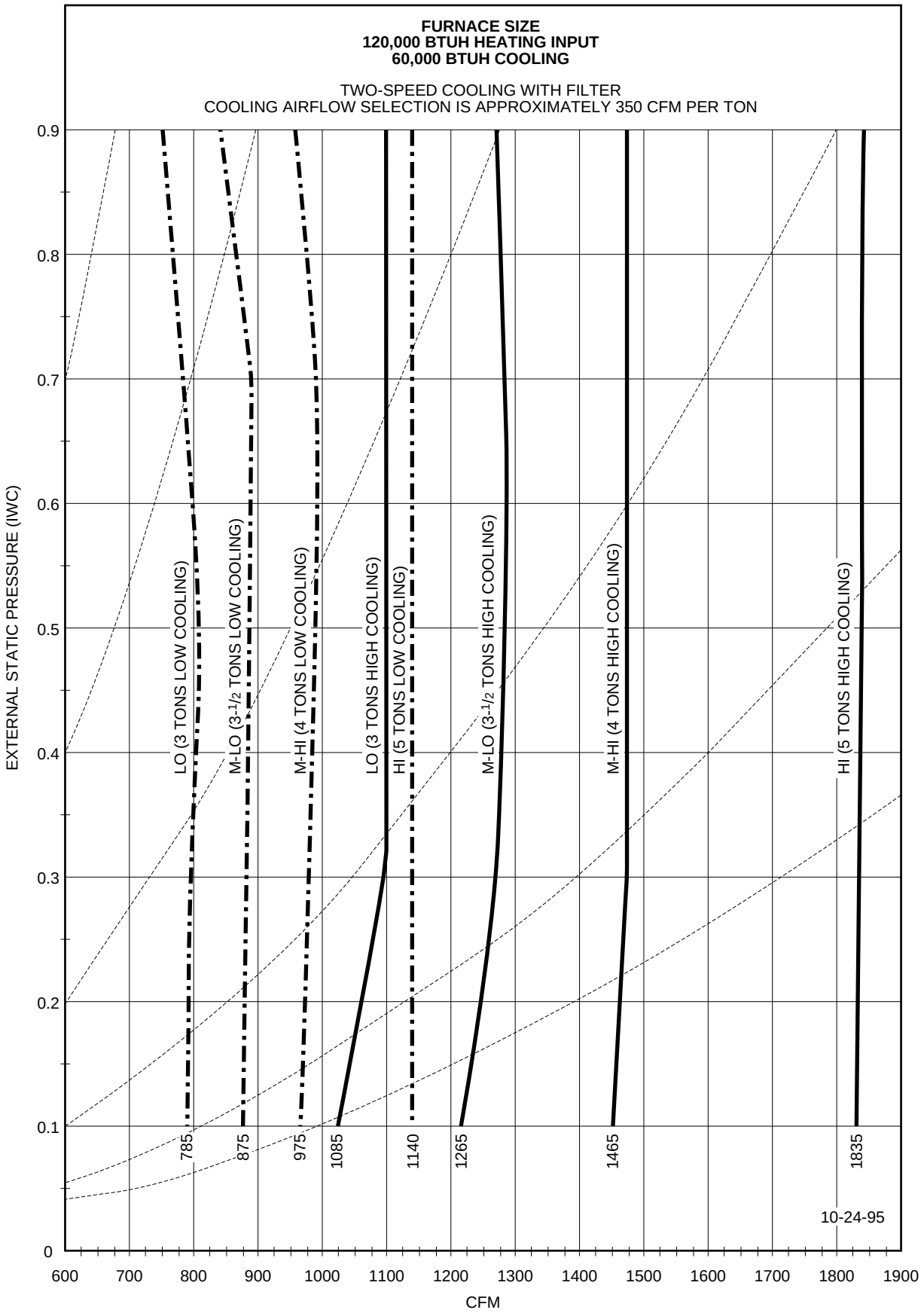
FURNACE SIZE
120,000 BTUH HEATING INPUT
60,000 BTUH COOLING
TWO-SPEED COOLING WITH FILTER
COOLING AIRFLOW SELECTION IS APPROXIMATELY 350 CFM PER TON
EXTERNAL STATIC PRESSURE (IWC)
0
0.1
0.2
0.3
0.4
0.5
0.6
0.7
0.8
0.9
600
700
800
900
1000
1100
1200
1300
1400
1500
1600
1700
1800
1900
CFM
LO (3 TONS LOW COOLING)
M-LO (3-1/2 TONS LOW COOLING)
M-HI (4 TONS LOW COOLING)
LO (3 TONS HIGH COOLING)
HI (5 TONS LOW COOLING)
M-LO (3-1/2 TONS HIGH COOLING)
M-HI (4 TONS HIGH COOLING)
HI (5 TONS HIGH COOLING)
785
875
975
1085
1140
1265
1465
1835
10-24-95

A96026

SERVICE TRAINING

Packaged Service Training programs are an excellent way to increase your knowledge of the equipment discussed in this manual, including:

- Unit Familiarization
- Maintenance
- Installation Overview
- Operating Sequence

A large selection of product, theory, and skills programs is available, using popular video-based formats and materials. All include video and/or slides, plus companion book.

Classroom Service Training plus "hands-on" the products in our labs can mean increased confidence that really pays dividends in faster troubleshooting, fewer callbacks. Course descriptions and schedules are in our catalog.

CALL FOR FREE CATALOG 1-800-962-9212

[ ] Packaged Service Training [ ] Classroom Service Training

A94328

SPECIFICATIONS SUBJECT TO CHANGE WITHOUT NOTICE

UNIT MUST BE INSTALLED IN ACCORDANCE
WITH INSTALLATION INSTRUCTIONS

Cancels: PDS 333B.60.1P

© 1996 BDP Co. Indpls, IN 46206 PRINTED IN U.S.A.

Catalog No. PA-3233-301 6-96