D5MUWA
Crossover Multi-Family Air Handler
Sizes 18K to 36K

PRODUCT DATA

Fig. 1 — Sizes 18K - 36K

NOTES: Read the entire instruction manual before starting the installation. Images are for illustration purposes only. Actual models may differ slightly.

TABLE OF CONTENTS

PAGE

SAFETY CONSIDERATIONS 2
INDUSTRY LEADING FEATURES / BENEFITS 4
A PERFECT BALANCE BETWEEN BUDGET LIMITS, ENERGY SAVINGS AND COMFORT 4
LOW SOUND LEVELS 4
SECURE OPERATION 4
FAST INSTALLATION 4
LEAK MITIGATION SYSTEM 4
115V CONVERSION CAPABLE. 4
BUILT-IN RELIABILITY 4
ECONOMICAL OPERATION 4
EASY-TO-USE CONTROLS 4
24V INTERFACE 4
AGENCY LISTINGS 4
MODEL NUMBER NOMENCLATURE 5
STANDARD FEATURES AND ACCESSORIES 6
FEATURES 6
DIMENSIONS 7
CLEARANCE 9
SPECIFICATIONS. 10
WIRING REQUIREMENTS 11
SOUND PRESSURE 13
SOUND PRESSURE IN OCTAVE BANDS. 14
WIRING DIAGRAMS 15
TROUBLESHOOTING 17
Part 1 - GENERAL 18
Part 2 - PRODUCTS 18
GUIDE SPECIFICATIONS 18
INDOOR AIR HANDLER SYSTEMS 18

SAFETY CONSIDERATIONS

Installing, starting up, and servicing air- conditioning equipment can be hazardous due to system pressures, electrical components, and equipment location (roofs, elevated structures, etc.).
Only trained, qualified installers and service mechanics should install, start- up, and service this equipment.

Untrained personnel can perform basic maintenance functions such as coil cleaning. All other operations should be performed by trained service personnel only.

When working on the equipment, observe the precautions in the literature and on tags, stickers, and labels attached to the equipment.

Follow all safety codes.Wear safety glasses and work gloves. Keep a quenching cloth and a fire extinguisher nearby when brazing. Use care in handling, rigging, and setting bulky equipment.
Read these instructions thoroughly and follow all warnings or cautions included in the literature and attached to the unit. Consult local building codes and National Electrical Code (NEC) for special requirements.
Recognize safety information.

This is the safety - alert symbol ⚠.

When you see this symbol on the unit and in instructions or manuals, be alert to the potential for personal injury. Understand these signal words: **DANGER**, **WARNING**, and **CAUTION**. These words are used with the safety- alert symbol.

DANGER identifies the most serious hazards which will result in severe personal injury or death.

WARNING signifies hazards which could result in personal injury or death.

CAUTION is used to identify unsafe practices which may result in minor personal injury or product and property damage.

NOTE is used to highlight suggestions which will result in enhanced installation, reliability, or operation.

⚠ WARNING

ELECTRICAL SHOCK HAZARD
Failure to follow this warning could result in personal injury or death.
Before installing, modifying, or servicing system, the main electrical disconnect switch must be in the OFF position. There may be more than 1 disconnect switch. Lock out and tag switch with a suitable warning label.

⚠ WARNING

EXPLOSION HAZARD
Failure to follow this warning could result in death, serious personal injury, and/or property damage.
Never use air or gases containing oxygen for leak testing or operating refrigerant compressors. Pressurized mixtures of air or gases containing oxygen can lead to an explosion.

⚠ CAUTION

EQUIPMENT DAMAGE HAZARD
Failure to follow this caution may result in equipment damage or improper operation.
Do not bury more than 36 in. (914 mm) of refrigerant pipe in the ground. If any section of pipe is buried, there must be a 6 in. (152 mm) vertical rise to the valve connections on the outdoor units. If more than the recommended length is buried, refrigerant may migrate to the cooler buried section during extended periods of system shutdown. This causes refrigerant slugging and could possibly damage the compressor at start-up.

⚠ WARNING

This appliance is not intended for use by persons (including children) with reduced physical, sensory or mental capabilities, or lack of experience and knowledge, unless they have been given supervision or instruction concerning use of the appliance by a person responsible for their safety. Children should be supervised to ensure that they do not play with the appliance.

⚠ WARNING

Only use the specified wire. If the wire is damaged, it must be replaced by the manufacturer, its service agent or similarly qualified persons in order to avoid a hazard. The product must be properly grounded at the time of installation, or electric shock may occur.
For all electrical work, follow all local and national wiring standards, regulations, and the Installation Manual. Connect the cables tightly, and clamp them securely to prevent external forces from damaging the terminal. Improper electrical connections can overheat and cause fire, and may also cause shock. All electrical connections must be made according to the Electrical Connection Diagram located on the panels of the indoor and outdoor units.
All wiring must be properly arranged to ensure that the control board cover can close properly. If the control board cover is not closed properly, it can lead to corrosion and cause the connection points on the terminal to heat up, catch fire, or cause electrical shock.
Disconnection must be incorporated in the fixed wiring in accordance with NEC, CSA and Local Codes. **Do not** share the electrical outlet with other appliances. Improper or insufficient power supply can cause fire or electric shock.
If connecting power to fixed wiring, an all-pole disconnection device which has at least 3mm clearances in all poles, and have a leakage current that may exceed 10mA, the residual current device (RCD) having a rated residual operating current not exceeding 30mA, and disconnection must be incorporated in the fixed wiring in accordance with NEC, CSA and Local Codes.

Manufacturer reserves the right to change, at any time, specifications and designs without notice and without obligations.

⚠ WARNING

Turn off the air conditioner and disconnect the power before performing any installation or repairing. Failure to do so can cause electric shock.

Installation must be performed by an authorized dealer or specialist. Defective installation can cause water leakage, electrical shock, or fire. Installation must be performed according to the installation instructions.

Improper installation can cause water leakage, electrical shock, or fire. Contact an authorized service technician for repair or maintenance of this unit. This appliance shall be installed in accordance with national wiring regulations.

Only use the included accessories, parts, and specified parts for installation. Using non-standard parts can cause water leakage, electrical shock, fire, and can cause the unit to fail.

Install the unit in a firm location that can support the unit's weight. If the chosen location cannot support the unit's weight, or the installation is not done properly, the unit may drop and cause serious injury and damage. Install drainage piping according to the instructions in this manual. Improper drainage may cause water damage to your home and property. For units that have an auxiliary electric heater, do not install the unit within 3 feet (1 meter) of any combustible materials.

If combustible gas accumulates around the unit, it may cause fire.

Do not turn on the power until all work has been completed.

When moving or relocating the air conditioner, consult experienced service technicians for disconnection and re-installation of the unit.

Read the information for details in "indoor unit installation" and "outdoor unit installation" sections.

NOTE: The air conditioner's circuit board (PCB) is designed with a fuse to provide overcurrent protection. The specifications of the fuse are printed on the circuit board , for example : T3.15AL/250VAC, TSAL/250VAC, T3.15A/250VAC, TSA/250VAC, T20A/250V AC, T30A/250V AC, etc.

NOTE: Only a blast-proof ceramic fuse can be used.

⚠ WARNING

FOR FLAMMABLE REFRIGERANTS

Do not use means to accelerate the defrosting process or to clean, other than those recommended by the manufacturer.

The appliance shall be stored in a room without continuously operating ignition sources (for example: open flames, an operating gas appliance or an operating electric heater).

Do not pierce or burn. Be aware that refrigerants may not contain an odor.

⚠ WARNING

PERSONAL INJURY AND PROPERTY DAMAGE HAZARD

For continued performance, reliability, and safety, the only approved accessories and replacement parts are those specified by the equipment manufacturer. The use of non-manufacturer approved parts and accessories could invalidate the equipment limited warranty and result in a fire risk, equipment malfunction, and failure.

Review the manufacturer's instructions and replacement parts catalogs available from your equipment supplier.

Table 1 — Symbols displayed on the indoor unit or outdoor unit

A2L	WARNING	This symbol shows that this appliance used a flammable refrigerant. If the refrigerant is leaked and exposed to an external ignition source, there is a risk of fire.
	CAUTION	This symbol shows that the operation manual should be read carefully.
	CAUTION	This symbol shows that a service personnel should be handling this equipment with reference to the installation manual.
	CAUTION	
	CAUTION	This symbol shows that information is available such as the operating manual or installation manual.

WARNING - RISK OF FIRE DUE TO FLAMMABLE REFRIGERANT USED. FOLLOW HANDLING INSTRUCTIONS CAREFULLY IN COMPLIANCE WITH NATIONAL REGULATIONS.

R-454B

Refrigerant Safety Group A2L

R-454B

INDUSTRY LEADING FEATURES / BENEFITS

A PERFECT BALANCE BETWEEN BUDGET LIMITS, ENERGY SAVINGS AND COMFORT

The **D5MUWA** series air handler units are a matched combination of outdoor condensing units connected only by refrigerant tubing and wires.

This selection of fan coils permits creative solutions to design problems such as:

- Add-ons to current space (an office or family room addition)
- Special space requirements
- When changes in the load cannot be handled by the existing system
- Historical renovations or any application where preserving the look of the original structure is essential.

LOW SOUND LEVELS

When noise is a concern, the **D5MUWA** is the answer. The indoor units are whisper quiet. There are no compressors indoors, either in the conditioned space or directly over it, and there is none of the noise usually generated by air being forced through ductwork.

SECURE OPERATION

If security is an issue, outdoor and indoor units are connected only by refrigerant piping and wiring to prevent intruders from crawling through the ductwork. In addition, since outdoor units can be installed close to an outside wall, coils are protected from vandals and severe weather.

FAST INSTALLATION

This compact ductless system is simple to install. This makes the air handler systems the equipment of choice, especially in retrofit situations.

On all indoor units, service and maintenance expense is reduced due to easy accessible service panels. In addition, these air handler systems have extensive self-diagnostics to assist in troubleshooting.

LEAK MITIGATION SYSTEM

The unit Includes a leak mitigation system, and there is no need to re-orient the leak sensor for different install positions.

115V CONVERSION CAPABLE

This unit can be to be converted to 115V applications.

BUILT-IN RELIABILITY

The air handler system indoor and outdoor units are designed to provide years of trouble-free operation.

The air handler indoor units include protection against freeze-up and high evaporator temperatures on heat pumps.

The condensing units on the heat pumps are protected by a three minute delay that provides over-current protection and high temperature protection prior to the start of the compressor.

ECONOMICAL OPERATION

The air handler system design allows individual or multi-room heating or cooling when required. There is no need to run large supply-air fans or chilled water pumps to handle a few spaces with unique load patterns.

EASY-TO-USE CONTROLS

The air handler units have microprocessor-based controls to provide the ultimate in comfort and efficiency. The user-friendly control provides the interface between the user and the unit.

24V INTERFACE

The built-in 24V Interface allows users to control the system with a third party thermostat.

AGENCY LISTINGS

All systems are listed with AHRI (Air Conditioning, Heating & Refrigeration Institute), UL/ETL and CSA.

Manufacturer reserves the right to change, at any time, specifications and designs without notice and without obligations.

MODEL NUMBER NOMENCLATURE

INDOOR UNIT

D 5 MU W A Q 36 X A 3

D = INDOOR UNIT

5 = PURON ADVANCE

M U = MODEL TYPE

W = WALL MOUNTED

A = MAJOR SERIES

Q = HEAT PUMP

VOLTAGE
3 = 208/230 1-60 *
* CONFIGURABLE FOR 115V

A = CROSSOVER

X = INDOOR UNIT

NOMINAL CAPACITY
18 -1.5 TON
24 - 2 TON
30 - 2.5 TON
36 - 3 TONS

Use of the AHRI Certified TM Mark indicates a manufacturer's participation in the program For verification of certification for individual products, go to www.ahridirectory.org.

STANDARD FEATURES AND ACCESSORIES

FEATURES

EASE OF INSTALLATION	
Low Voltage Controls	S
COMFORT FEATURES	
Microprocessor Controls	S
Auto Restart Function	S
Auto Changeover on Heat Pumps	S
ENERGY SAVING FEATURES	
Inverter Driven Compressor	S
46° F Heating Mode (Heating Setback)	S
SAFETY AND RELIABILITY	
3 Minute Time Delay For Compressor	S
High Compressor Discharge Temperature	S
Low Voltage Protection	S
Compressor Overload Protection	S
Compressor Over Current Protection	S
IPM Module Protection	S
Condenser High Temperature Protection in Cooling Mode	S
Aluminum Hydrophilic pre-coated fins	S
EASE OF SERVICE AND MAINTENANCE	
Diagnostics	S
Liquid Line Pressure Taps	S
APPLICATION FLEXIBILITY	
Crankcase Heater	S
Multi-poise Installation	S

Legend

S - Standard
A - Accessory

Table 2 — Accessories

ORDERING NO.	DESCRIPTION	FOR SIZES
EHKME03KN	Electric Heater Kit 3kW	18K, 24K, 30K, 36K
EHKME05KN	Electric Heater Kit 5kW	18K, 24K, 30K, 36K
EHKME08KN	Electric Heater Kit 8kW	18K, 24K, 30K, 36K
EHKME10KN	Electric Heater Kit 10kW	18K, 24K, 30K, 36K

Indoor Wiring Methods - EHKME Auxiliary Heater

Option A — "Indoor unit powered separately" (Dual-point power):

The fan coil/indoor unit (IDU) is powered on its own circuit (115V or 208/230V, per model), and the electric heater has its own dedicated 208/230V circuit through the heater's breaker. This is the factory-default arrangement.

Option B — "Power taken from behind the circuit breaker" (Single-point power):

The IDU and heater are fed from one 208/230V supply routed through the heater's breaker (the IDU taps power "behind"/downstream of that breaker). Only 208/230V is supported in this mode (no 115V single-point).

Refer to the EHKME Auxiliary Heater, Installation Manual for more information.

Installation Options

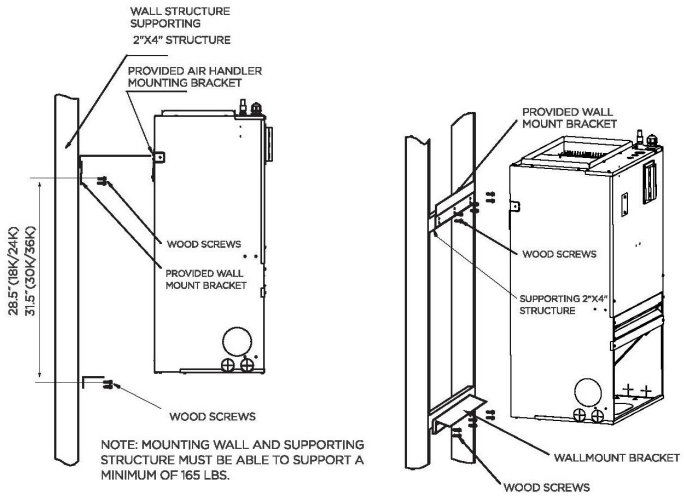

Fig. 2 —Wall Mount

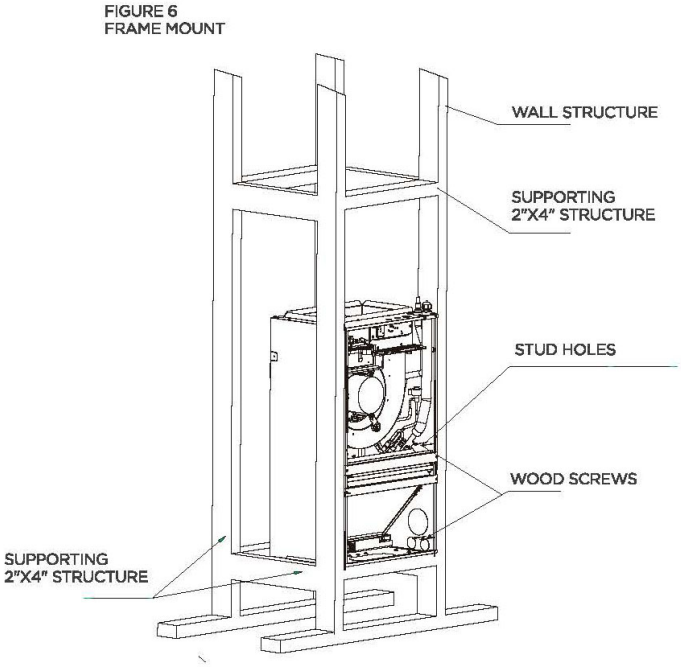

Fig. 3 —Frame Mount

NOTE: This AHU can only be installed vertical wall mount and frame mount. Horizontal and down flow installation is not allowed.

DIMENSIONS

Table 3 — Dimensions and Weights

UNIT	HEIGHT (H)	WIDTH (W)	DEPTH (D)	SUPPLY WIDTH (WT)	SUPPY DEPTH (D1)	FILTER SIZE	WEIGHT (Lbs.)
D5MUWAQ18XA3	36.5	20.3	15.7	17.5	10.5	14x18x1	88.5
D5MUWAQ24XA3	36.5	20.3	15.7	17.5	10.5	14x18x1	88.5
D5MUWAQ30XA3	40.0	22.0	19.0	18.8	9.3	20x20x1	109
D5MUWAQ36XA3	40.0	22.0	19.0	18.8	9.3	20x20x1	109

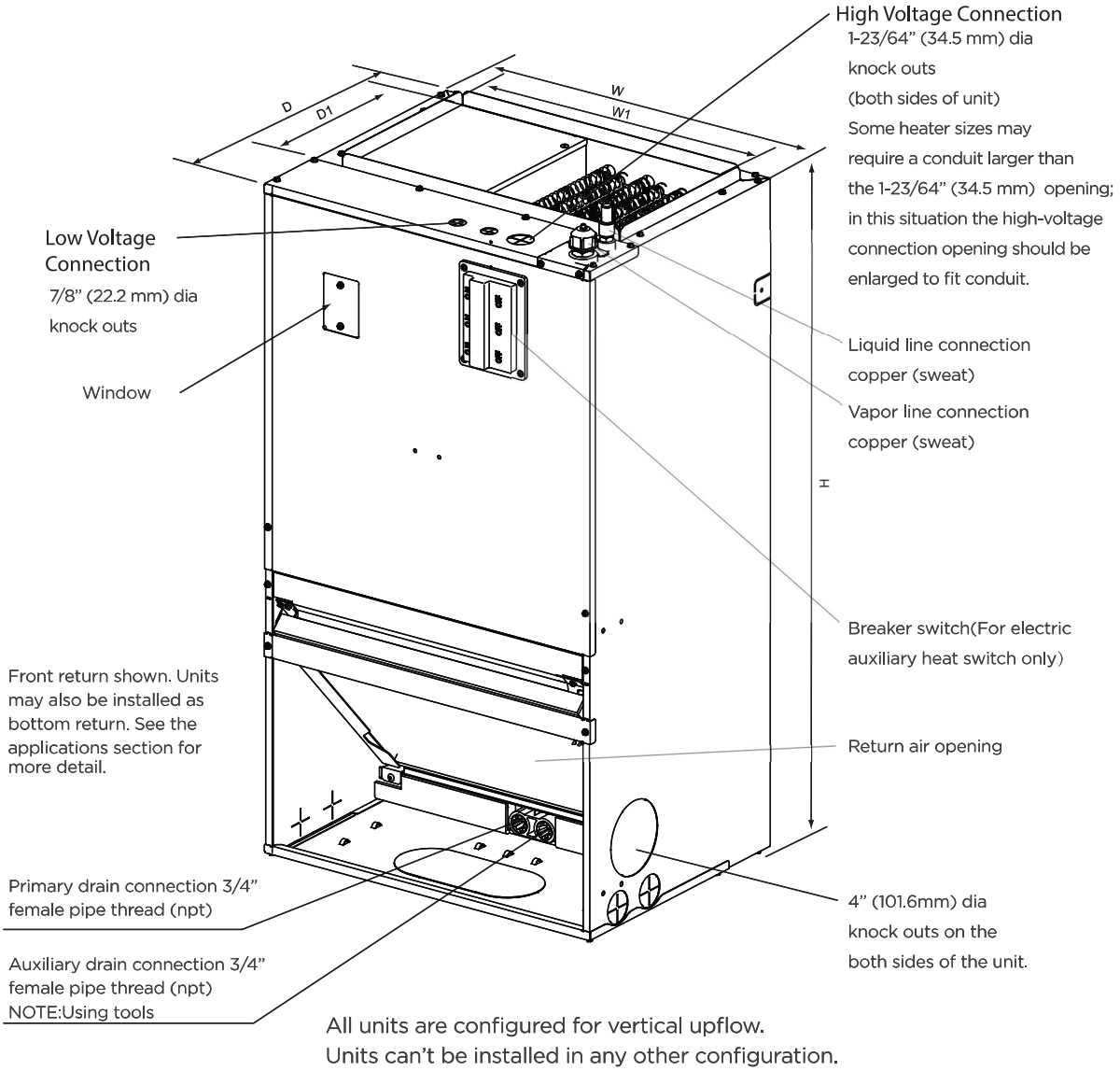

Fig. 4 — Features, All Sizes (18K - 36K)

Air Filter (not factory installed) Dimensions

External filter or other means of filtration is required. Units should be sized for a maximum of 300 feet/min. air velocity or what is recommended for the type filter installed.

Filter application and placement are critical to airflow, which may affect the heating and cooling system performance. Reduced airflow can shorten the life of the system's major components, such as motor, limits, elements, heat relays, evaporator coil or compressor. Consequently, we recommend that the return air duct system have only one filter location. For systems with a return air filter grill or multiple filter grills, can have a filter installed at each of the return air openings.

If adding high efficiency filters or electronic air filtration systems, it is very important that the air flow is not reduced. If air flow is reduced the overall performance and efficiency of the unit will be reduced. It is strongly recommended that a professional installation technician is contacted to ensure installation of these such filtration systems are installed correctly.

IMPORTANT: DO NOT DOUBLE FILTER THE RETURN AIR DUCT SYSTEM. DO NOT FILTER THE SUPPLY AIR DUCT SYSTEM. THIS WILL CHANGE THE PERFORMANCE OF THE UNIT AND REDUCE AIRFLOW.

NOTE: The user needs to use a standard filter that meets the requirements of UL900.

WARNING

Do not operate the system without filters. A portion of the dust entrained in the air may temporarily lodge In the duct runs and at the supply registers. Any circulated dust particles could be heated and charred by contact with the air handler elements. This residue could soil ceilings, walls, drapes, carpets and other articles in the house.

Soot damage may occur with filters in place, when certain types of candles, oil lamps or standing pilots are burned.

CLEARANCE

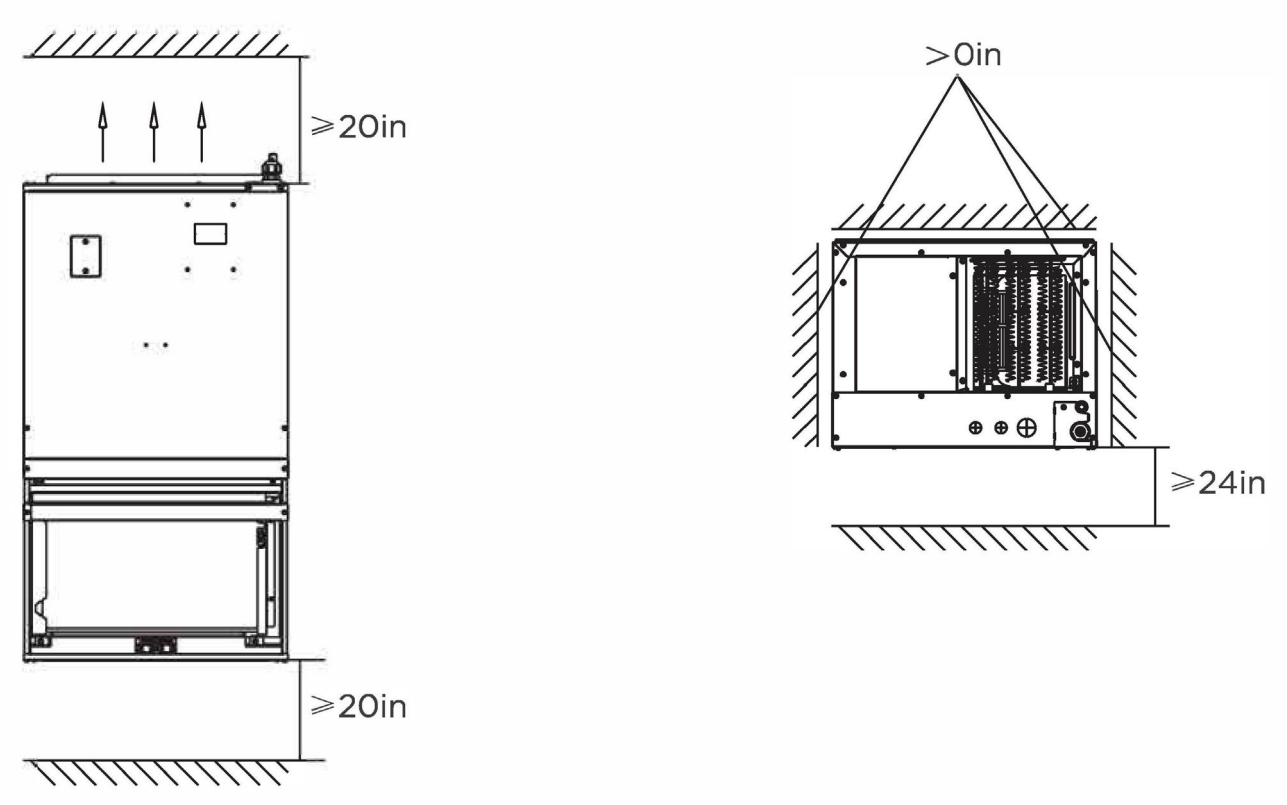

Fig. 5 — Clearances

SPECIFICATIONS

Size			18K	24K	30K	36K
Power supply		V;Ph;Hz	115/208/230V;1Ph;60HZ	115/208/230V;1Ph;60HZ	115/208/230V;1Ph;60HZ	115/208/230V;1Ph;60HZ
INDOOR FAN SPECIFICATIONS	Material	-	Galvanized sheet	Galvanized sheet	Galvanized sheet	Galvanized sheet
	Type	-	LX-278.5#158.5#12.7-51	LX-278.5#158.5#12.7-51	LX-282*245*12.7-49J-A(LD)	LX-282*245*12.7-49J-A(LD)
	Diameter	inch	11	11	11.1	11.1
		mm	278.5	278.5	282	282
	Height	inch	6.2	6.2	9.6	9.6
		mm	158.5	158.5	245	245
INDOOR MOTOR SPECIFICATIONS	Model	-	ZKFD-250-10-5	ZKFD-250-10-5	ZKFD-375-10-5	ZKFD-375-10-5
	Type	-	DC	DC	DC	DC
	Input (0.5 in.w.g.)	W	146.6	146.6	234.2	234.2
	Max. input(0.8 in.w.g.)	W	234	234	361.3	361.3
	Output(0.5 in.w.g.)	W	118.7	120.2	199.1	196.7
	FLA (The rated input current of the power conversion equipment)	A	3	3	4.5	5
	Rated HP	HP	1/3	1/3	1/2	1/2
	Range of current	Amps	0.454~1.975	0.454~1.975	0.623~2.981	0.623~2.981
	Rated current	Amps	1.163	1.163	1.761	1.761
	Speed	rev/min	115V/230V:780/725/680/620	115V/230V:780/725/680/620	115V:848/786/694/636 230V:850/783/693/633	115V:848/786/694/636 230V:850/783/693/633
	Rated RPM	rev/min	115V/230V:725	115V/230V:725	115V:786 230V:783	115V:786 230V:783
	Insulation class	-	B	B	B	B
	Safe class	-	IPX0	IPX0	IPX0	IPX0
INDOOR REFRIGERANT COIL SPECIFICATIONS	Number of rows	Rows	5	5	5	5
	Tube outside dia.	inch	0.276	0.276	0.276	0.276
		mm	Φ7	Φ7	Φ7	Φ7
	Nominal Tube Wall	Inch (mm)	0.0094(0.24)	0.0094(0.24)	0.0094(0.24)	0.0094(0.24)
	Tube Enhancement	(Yes/No)	Yes	Yes	Yes	Yes
	Tube Material	-	Aluminum	Aluminum	Aluminum	Aluminum
	Tube pitch (a) x row pitch (b)	inch	0.83x0.53	0.83x0.53	0.83x0.53	0.83x0.53
		mm	21x13.37	21x13.37	21x13.37	21x13.37
	Fin Spacing	FPI	20	20	20	20
		mm	1.3	1.3	1.3	1.3
	Fin type	-	20	20	20	20
	Fin Material	-	Hydrophilic aluminum	Hydrophilic aluminum	Hydrophilic aluminum	Hydrophilic aluminum
	Coil length x height x width	inch	16.34x18.19x2.63	16.34x18.19x2.63	18.31x23.15x2.63	18.31x23.15x2.63
		mm	415*462*66.85	415*462*66.85	465*588*66.85	465*588*66.85
	Face area	ft2	2.06	2.06	2.94	2.94
	Number of circuits	#	6	6	8	8
SOUND DATA	Indoor Sound Pressure Level (Turbo/Hi/Med/Lo/Silent)	dB(A)	48/47/45/39	53/51/48/38	51/50/46/35	//52/48/36
CFM DATA	Indoor air flow data (Turbo/Hi/Med/Lo/Silent)	CFM	618 / 577 / 530 / 489	824 / 759 / 695 / 630	989 / 895 / 806 / 712	1,189 / 1,083 / 971 / 865

Manufacturer reserves the right to change, at any time, specifications and designs without notice and without obligations.

Size				18K	24K	30K	36K
MOISTURE REMOVAL		Dehumidifying Volume	L/h	1.7	2.2	3.3	3.5
ENVIRONMENTAL SPECIFICATIONS	Cooling Operating Range	Indoor Min - Max DB	°F	60~90	60~90	60~90	60~90
			(°C)	(16~32)	(16~32)	(16~32)	(16~32)
		Indoor Min - Max WB	°F	59-84	59-84	59-84	59-84
			(°C)	(15-29)	(15-29)	(15-29)	(15-29)
		Outdoor Min - Max DB	°F	-22~122	-22~122	-22~122	-22~122
			(°C)	(-30~50)	(-30~50)	(-30~50)	(-30~50)
	Heating Operating Range	Indoor Min - Max DB	°F	32~86	32~86	32~86	32~103
			(°C)	(0~30)	(0~30)	(0~30)	(0~30)
		Outdoor Min - Max DB	°F	-22~75	-22~75	-22~75	-22~75
			(°C)	(-30~24)	(-30~24)	(-30~24)	(-30~24)
	Cooling Cut-in	Temperature	°F	NA	NA	NA	NA
			(°C)	NA	NA	NA	NA
	Cooling Cut-out	Temperature	°F	NA	NA	NA	NA
			(°C)	NA	NA	NA	NA
	Heating Cut-in	Temperature	°F	NA	NA	NA	NA
			(°C)	NA	NA	NA	NA
	Heating Cut-Out	Temperature	°F	NA	NA	NA	NA
			(°C)	NA	NA	NA	NA
	Non-operating environment Storage	Temperature range (DB)	°F	-49-140	-49-140	-49-140	-49-140
			(°C)	(-45-60)	(-45-60)	(-45-60)	(-45-60)
	Operation Humidity	%	-	0-80%	0-80%	0-80%	0-80%
	Ambient Humidity	%	-	0-80%	0-80%	0-80%	0-80%

WIRING REQUIREMENTS

Size all wires per the NEC (National Electrical Code) or CEC (Canadian Electrical Code) and local codes. Use the electrical data from the outdoor unit (MCA - minimum circuit amps and MOCP - maximum over current protection), to correctly size the wires and the disconnect fuse or breakers respectively.

Communication Wiring: There are two options available to establish communication between the outdoor unit and approved indoor unit.

Table 4 — Options for Establishing Communication

OPTIONS	COMMUNICATION TYPE	RECOMMENDED CABLE SIZE
1	Non-Polarity RS485 Communication (S1 - S2)	16 AWG (stranded shielded)
2	24V communication	18 AWG 8 conductor thermostat wire

NOTE: 24 volt communication between the indoor and outdoor is prohibited due to compliance restrictions.

⚠ WARNING

Refer to the wiring template for the wiring method.

DO NOT connect the power cord to the communication line as this may damage the system.

⚠ CAUTION

EQUIPMENT DAMAGE HAZARD

Be sure to comply with local codes.

Every wire must be connected firmly. Loose wiring may cause the terminal to overheat or result in a unit malfunction. A fire hazard may also exist. Ensure all wiring is tightly connected.

No wire should touch the refrigerant tubing, compressor or any moving parts.

Disconnecting means should be provided and located within sight and readily accessible from the system. Consult local electrical codes. Route the connecting cable with conduit through the hole in the conduit panel.

Table 5 – Air Volume

CAPACITY	EXTERNAL STATIC PRESSURE RANGE	FAN SPEED	ELECTRIC AUXILIARY HEAT MODULE	24V THERMOSTAT		WIRED CONTROLLER		AIRFLOW VOLUME (CFM)
				DIP SWITCH	24V TERMINAL ENGAGED	DIP SWITCH	MODE	
18K (1.5 TON)	0 - 0.80 in.wc.	Cooling Turbo	—	SW3-4=ON	Y2/Y	—	Cool	618
		Cooling High	—	SW3-4=OFF	Y2/Y	—	Cool	576
		Cooling Medium	—	—	Y1	—	Cool	529
		Cooling Low	—	—	—	—	Cool	488
		Heat Pump Turbo	—	—	—	—	Heat	565
		Heat Pump High	—	—	B+Y2/Y, W	—	Heat	541
		Heat Pump Medium	—	—	B+Y1	—	Heat	435
		Heat Pump Low	—	—	—	—	Heat	400
		Electric auxiliary heat module 0(Default)	10kW	SW4-1=OFF SW4-2=OFF SW4-3=OFF	W1, W2, AUX	SW4-1=OFF SW4-2=OFF SW4-3=OFF	Heat + AUX, AUX	653
		Electric auxiliary heat module 1	10kW, 8kW	SW4-1=OFF SW4-2=OFF SW4-3=ON	W1, W2, AUX	SW4-1=OFF SW4-2=OFF SW4-3=ON	Heat + AUX, AUX	624
		Electric auxiliary heat module 2	8kW	SW4-1=OFF SW4-2=ON SW4-3=OFF	W1, W2, AUX	SW4-1=OFF SW4-2=ON SW4-3=OFF	Heat + AUX, AUX	594
		Electric auxiliary heat module 3	5kW, 3kW	SW4-1=OFF SW4-2=ON SW4-3=ON	W1, W2, AUX	SW4-1=OFF SW4-2=ON SW4-3=ON	Heat + AUX, AUX	565
24K (2 TON)	0 - 0.80 in.wc.	Cooling Turbo	—	SW3-4=ON	Y2/Y	—	Cool	824
		Cooling High	—	SW3-4=OFF	Y2/Y	—	Cool	759
		Cooling Medium	—	—	Y1	—	Cool	694
		Cooling Low	—	—	—	—	Cool	629
		Heat Pump Turbo	—	—	—	—	Heat	788
		Heat Pump High	—	—	B+Y2/Y, W	—	Heat	753
		Heat Pump Medium	—	—	B+Y1	—	Heat	641
		Heat Pump Low	—	—	—	—	Heat	524
		Electric auxiliary heat module 0(Default)	15kW	SW4-1=OFF SW4-2=OFF SW4-3=OFF	W1, W2, AUX	SW4-1=OFF SW4-2=OFF SW4-3=OFF	Heat + AUX, AUX	871
		Electric auxiliary heat module 1	15kW, 10kW	SW4-1=OFF SW4-2=OFF SW4-3=ON	W1, W2, AUX	SW4-1=OFF SW4-2=OFF SW4-3=ON	Heat + AUX, AUX	841
		Electric auxiliary heat module 2	10kW, 8kW	SW4-1=OFF SW4-2=ON SW4-3=OFF	W1, W2, AUX	SW4-1=OFF SW4-2=ON SW4-3=OFF	Heat + AUX, AUX	818
		Electric auxiliary heat module 3	5kW	SW4-1=OFF SW4-2=ON SW4-3=ON	W1, W2, AUX	SW4-1=OFF SW4-2=ON SW4-3=ON	Heat + AUX, AUX	788
30K(2.5 TON)	0 - 0.80 in.wc.	Cooling Turbo	—	SW3-4=ON	Y2/Y	—	Cool	988
		Cooling High	—	SW3-4=OFF	Y2/Y	—	Cool	894
		Cooling Medium	—	—	Y1	—	Cool	806
		Cooling Low	—	—	—	—	Cool	712
		Heat Pump Turbo	—	—	—	—	Heat	918
		Heat Pump High	—	—	B+Y2/Y, W	—	Heat	876
		Heat Pump Medium	—	—	B+Y1	—	Heat	665
		Heat Pump Low	—	—	—	—	Heat	453
		Electric auxiliary heat module 0(Default)	15kW	SW4-1=OFF SW4-2=OFF SW4-3=OFF	W1, W2, AUX	SW4-1=OFF SW4-2=OFF SW4-3=OFF	Heat + AUX, AUX	1088
		Electric auxiliary heat module 1	15kW, 10kW	SW4-1=OFF SW4-2=OFF SW4-3=ON	W1, W2, AUX	SW4-1=OFF SW4-2=OFF SW4-3=ON	Heat + AUX, AUX	1029
		Electric auxiliary heat module 2	10kW, 8kW	SW4-1=OFF SW4-2=ON SW4-3=OFF	W1, W2, AUX	SW4-1=OFF SW4-2=ON SW4-3=OFF	Heat + AUX, AUX	976
		Electric auxiliary heat module 3	5kW	SW4-1=OFF SW4-2=ON SW4-3=ON	W1, W2, AUX	SW4-1=OFF SW4-2=ON SW4-3=ON	Heat + AUX, AUX	918

Manufacturer reserves the right to change, at any time, specifications and designs without notice and without obligations.

Table 6 – Air Volume (Continued)

CAPACITY	EXTERNAL STATIC PRESSURE RANGE	FAN SPEED	ELECTRIC AUXILIARY HEAT MODULE	24V THERMOSTAT		WIRED CONTROLLER		AIRFLOW VOLUME (CFM)
				DIP SWITCH	24V TERMINAL ENGAGED	DIP SWITCH	MODE	
36K（3 TON）	0 - 0.80 in.wc.	Cooling Turbo	—	SW3-4=ON	Y2/Y	—	Cool	1188
		Cooling High	—	SW3-4=OFF	Y2/Y	—	Cool	1082
		Cooling Medium	—	—	Y1	—	Cool	971
		Cooling Low	—	—	—	—	Cool	865
		Heat Pump Turbo	—	—	—	—	Heat	1112
		Heat Pump High	—	—	B+Y2/Y, W	—	Heat	1059
		Heat Pump Medium	—	—	B+Y1	—	Heat	794
		Heat Pump Low	—	—	—	—	Heat	582
		Electric auxiliary heat module 0(Default)	20kW	SW4-1=OFF SW4-2=OFF SW4-3=OFF	W1, W2, AUX	SW4-1=OFF SW4-2=OFF SW4-3=OFF	Heat + AUX, AUX	1306
		Electric auxiliary heat module 1	15kW	SW4-1=OFF SW4-2=OFF SW4-3=ON	W1, W2, AUX	SW4-1=OFF SW4-2=OFF SW4-3=ON	Heat + AUX, AUX	1241
		Electric auxiliary heat module 2	10kW, 8kW	SW4-1=OFF SW4-2=ON SW4-3=OFF	W1, W2, AUX	SW4-1=OFF SW4-2=ON SW4-3=OFF	Heat + AUX, AUX	1176
		Electric auxiliary heat module 3	5kW, 8kW	SW4-1=OFF SW4-2=ON SW4-3=ON	W1, W2, AUX	SW4-1=OFF SW4-2=ON SW4-3=ON	Heat + AUX, AUX	1112
		Cooling Turbo	—	SW3-4=ON	Y2/Y	—	Cool	1600
		Cooling High	—	SW3-4=OFF	Y2/Y	—	Cool	1471
		Cooling Medium	—	—	Y1	—	Cool	1282
		Cooling Low	—	—	—	—	Cool	1094
		Heat Pump Turbo	—	—	—	—	Heat	1471
		Heat Pump High	—	—	B+Y2/Y, W	—	Heat	1324
		Heat Pump Medium	—	—	B+Y1	—	Heat	1141
		Heat Pump Low	—	—	—	—	Heat	976

SOUND PRESSURE

Table 7 — Sound Pressure

AIR HANDLER		18K	24K	30K	36K
Indoor Sound Pressure	**dB(A) at (Turbo/ High / Med / Low / Silent)**	N\A 41 39 33 N\A	N\A 44 42 28 N\A	47.0 46.0 43.0 27.5 N\A	49 48.0 45.5 25.5 N\A

SOUND PRESSURE IN OCTAVE BANDS

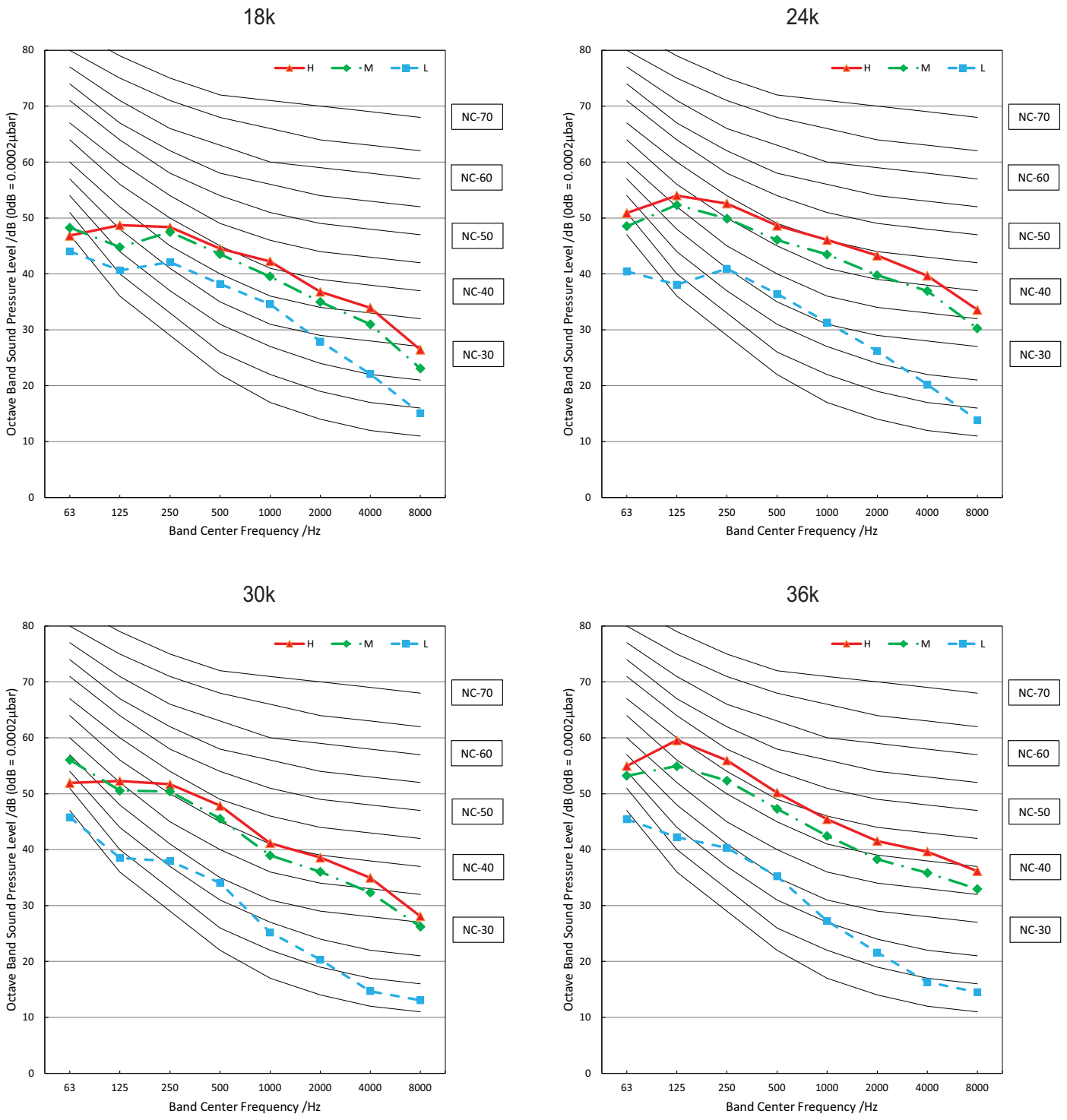

Fig. 6 —Sound Pressure Octave Bands (18K - 36K)

WIRING DIAGRAMS

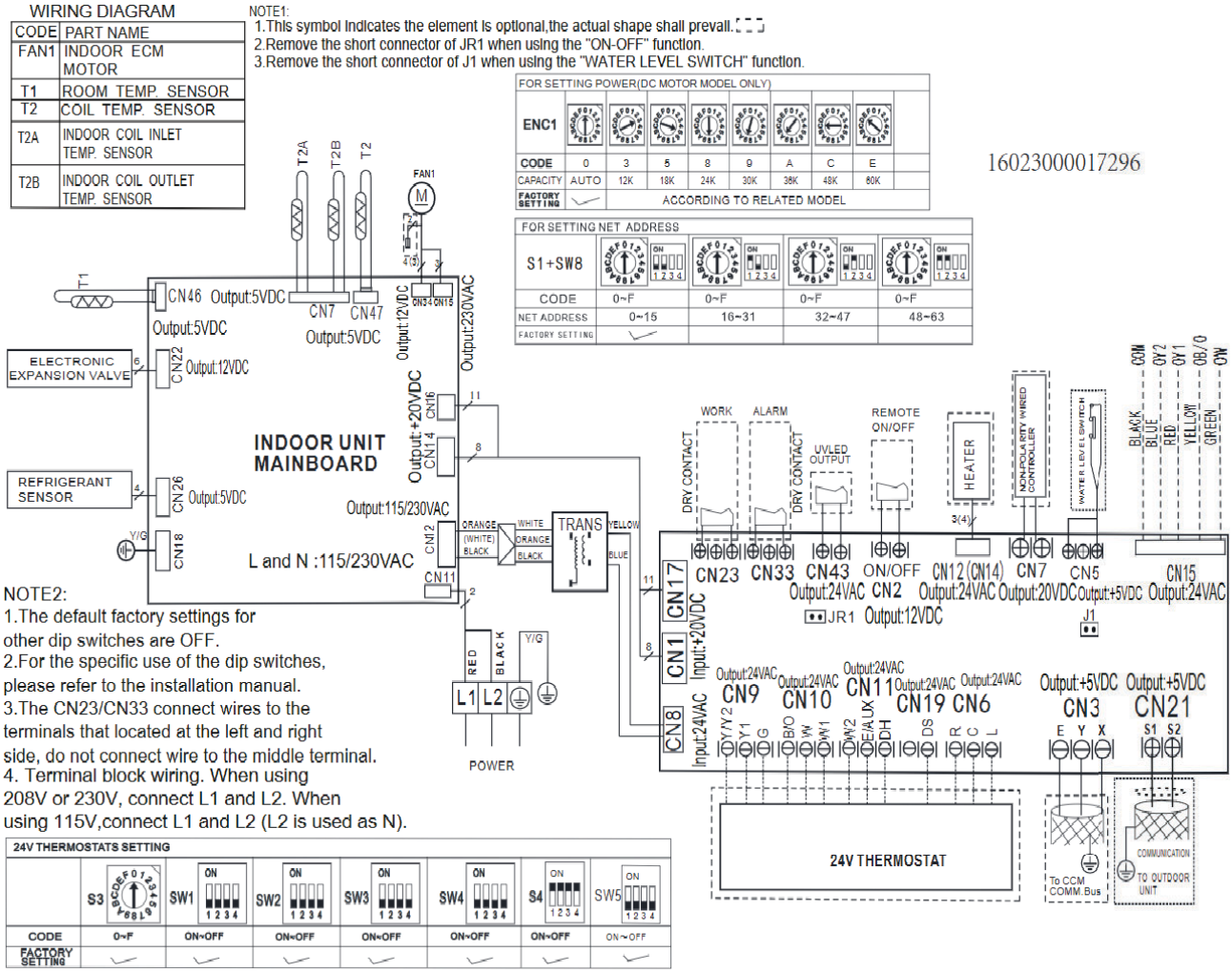

Fig. 7 —Wiring Diagram Sizes 18K - 24K

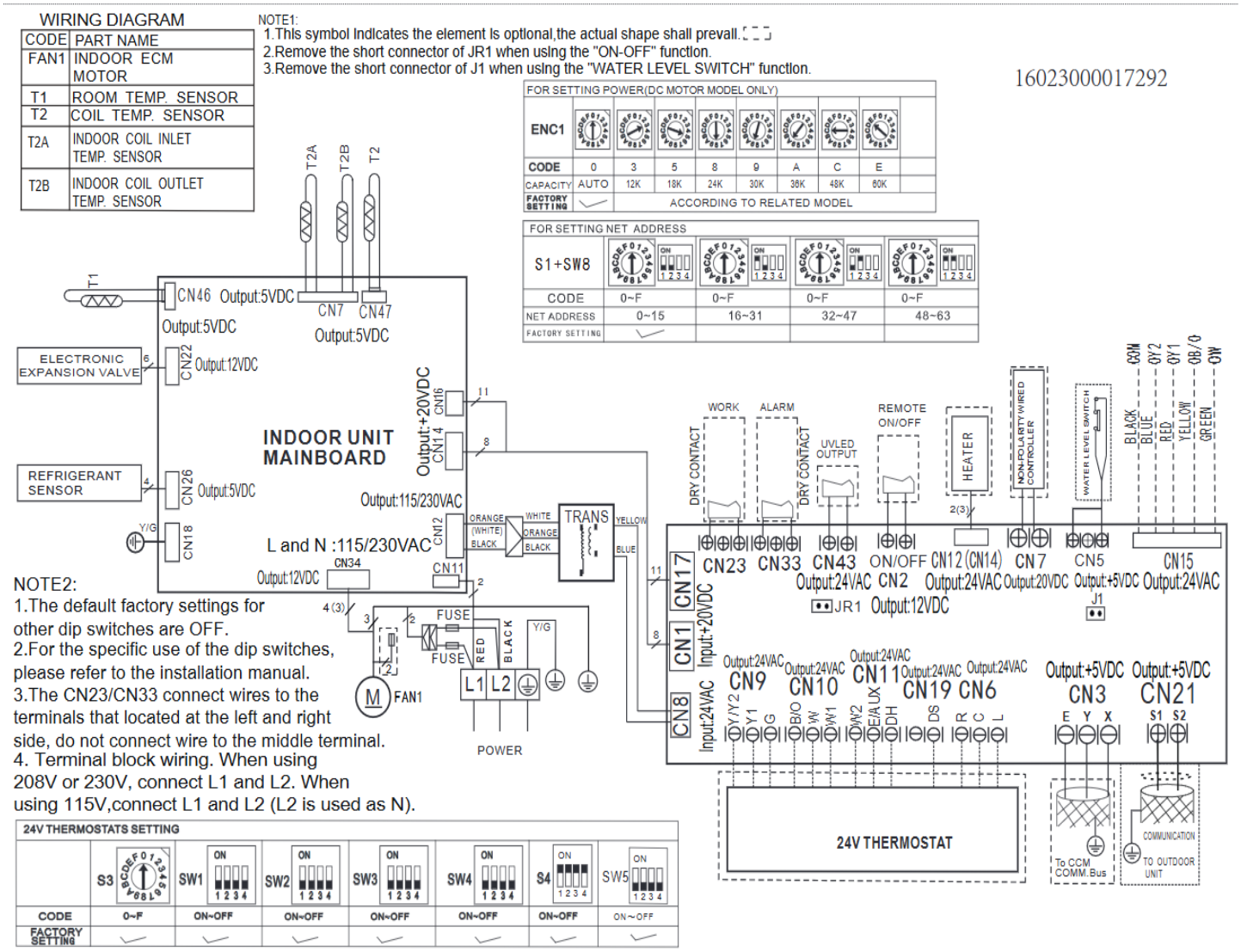

Fig. 8 — Wiring Diagram Sizes 30K, 36K

Table 8 — Wiring Diagram - All Models

CODE	CODE2	INDOOR UNIT MAINBOARD CONNECTION
CN5	5	output: 0-5VDC for water level switch connection
CN6	6	output: 5VDC for T2A, T2B (Temperature sensor)
CN9	9	output: 24VAC for 24V Interface
CN10	10	communication: 15VDC for 24V Interface
CN11	11	input: 230VAC High voltage
CN12	12	output: 24VAC for Heaters
CN15	15	output: 220VAC for ECM motor (fan)
CN18	18	output: 0V connection to ground
CN20	20	communication: 230VAC High voltage
CN22	22	output: 220VAC High voltage to transformer
CN29	29	output: 5VDC for T2 (Temperature sensor)
CN33	33	output: Normally open dry contact
CN34	34	output: 12VDC for ECM motor control
CN36	36	output: 0V for work
CN46	46	output: 5VDC for T1 (Temperature sensor)

TROUBLESHOOTING

Table 9 — Error Codes

DISPLAY	MALFUNCTION AND PROTECTION INDICATION
EC07	ODU fan speed out of control
EC0d	ODU malfunction
EC51	ODU EEPROM parameter error
EC52	ODU coil temp sensor error
EC53	ODU ambient temp sensor error
EC54	COMP. discharge temp sensor error
EC56	IDU coil outlet temp sensor error
ECC1	Other IDU refrigerant sensor detects leakage (multi-zone)
EH00	IDU EEPROM malfunction
EH03	IDU fan speed out of control
EH0A	IDU EEPROM parameter error
EH0b	IDU main control and display boards communication error
EH0E	Water-level alarm malfunction
EH3A	External fan DC bus voltage is too low protection
EH3b	External fan DC bus voltage is too high fault
EH60	IDU room temp. sensor (T1) error
EH61	IDU coil temp. sensor (T2) error
EH62/EH66	Evaporator coil inlet temp. sensor (T2B) is in open circuit or short circuit
EH65	Evaporator coil inlet temp. sensor (T2A) is in open circuit or short circuit
EHbA	Communication error between indoor unit and external fan module
EHb3	Communication malfunction between wired controller and indoor unit
EHC1	Refrigerant sensor detects leakage
EHC2	Refrigerant sensor is out of range and leakage is detected
EHC3	Refrigerant sensor is out of range
EL01	IDU & ODU communication error
EL0C	System lacks refrigerant
EL16	Communication malfunction between adapter board and outdoor main board
FHCC	Refrigerant sensor error
FL09	Mismatch between the new and old platforms
PC00	ODU IPM module protection
PC01	ODU voltage protection
PC02	Compressor top (or IPM) temp. protection
PC03	Pressure protection (low or high pressure)
PC04	Inverter compressor drive error
PC0L	Low ambient temp. protection
----	IDUs mode conflict
NOTE: The digital tube will show DF in defrost mode and FC in forced cooling mode. DF and FC are not error codes.	

Table 10 — Refrigerant Leak Detection Error Codes

EHC1	Refrigerant Sensor detects a leak
EHC2	Working condition of the refrigerant sensor is out of range and a leak is detected

If you receive one of the codes in Table 10, call a technician as soon as possible. No need to panic, the unit goes into TURBO mode until the error code clears. There is a "beeping" noise coming from the indoor unit, which is normal in this case.

For additional diagnostic information, refer to the Service Manual.

GUIDE SPECIFICATIONS
INDOOR AIR HANDLER SYSTEMS

Size Range: 1.5 to 5 Ton Nominal Cooling and Heating Capacity
Model Number: **D5MUWA**

Part 1 - GENERAL

1.01 System Description

Indoor, air handler, direct-expansion fan coils are matched with a heat pump outdoor unit.

1.02 Agency Listings

Unit is rated per AHRI Standards 210/240 and listed in the AHRI directory as a matched system.

1.03 Delivery, Storage, And Handling

Units are stored and handled per the unit manufacturer's recommendations.

1.04 Warranty (For Inclusion By Specifying Engineer)

Part 2 - PRODUCTS

2.01 Equipment

A. General:

Indoor, direct-expansion fan coil. The unit is complete with cooling/heating coil, fan, fan motor, piping connectors, electrical controls, microprocessor control system, and integral temperature sensing.

B. Unit Cabinet:

Unit cabinet is constructed of galvanized steel. The cabinet is fully insulated for improved thermal and acoustic performance.

C. Fans:

The fan is the tangential direct-drive blower type with air intake at the rear or bottom of the unit and discharge at the top.

D. Coil:

The coil is a copper tube with aluminum fins and galvanized steel tube sheets. The fins are bonded to the tubes by mechanical expansion and specially hydrophilic pre-coated for enhanced wet-ability. A drip pan under the coil has a drain connection for piping attachment to remove condensate.

E. Motors:

The motors have an open drip-proof, permanently lubricated ball bearing with inherent overload protection. Fan motors are 4-speed.

F. Controls:

The controls consist of a microprocessor-based control system which controls the space temperature, determines optimum fan speed, and runs self diagnostics.

The unit has the following functions (at a minimum):

1. An automatic restart, after a power failure, which sets the unit back to the same operating conditions it operated under at time of failure.
2. A timer function to provide a minimum 24−hour timer cycle for system Auto Start/Stop.
3. Automatic airflow technology - fan maintains set CFM range at up to 0.80" W.C. ESP
4. Temperature−sensing controls sense return air temperature.
5. Indoor coil freeze protection.
6. Wired remote controller to enter set points and operating conditions.
7. **DEHUMIDIFICATION** mode provides increased latent removal capability by modulating system operation and set point temperature. Applicable **only** with third party thermostats that have the dehumidification option.
8. **FAN−ONLY** operation to provide room air circulation when cooling is not required.
9. Diagnostics provide continuous checks of unit operation and warns of possible malfunctions. Error messages appear on the unit.
10. The fan speed control is user−selectable: high, medium, low, or microprocessor controlled automatic operation during all operating modes.
11. Automatic heating−to−cooling changeover in the **HEAT** pump mode. The control includes deadband to prevent rapid mode cycling between heating and cooling.
12. Indoor coil high temperature protection is provided to detect an excessive indoor discharge temperature when the unit is in the **HEAT** pump mode.

G. Electrical Requirements:

The indoor fan motor operates on 208-230V, or 115V.

H. Operating Characteristics:

The air handler system has a minimum SEER2 (Seasonal Energy Efficiency Ratio) and HSPF2 at AHRI conditions, as listed on the specifications table.

I. Refrigerant Lines:

All units have refrigerant lines that can be oriented to connect from the side of the unit.

© 2026 Carrier. All rights reserved.