RESIDENTIAL AIR CONDITIONERS AND HEAT PUMPS USING R-22 AND PURON® REFRIGERANT

bryant®

Application Guideline and Service Manual

TABLE OF CONTENTS

	PAGE
UNIT IDENTIFICATION	2
SAFETY CONSIDERATIONS	3
INTRODUCTION	3
INSTALLATION GUIDELINE	3
ACCESSORIES AND DESCRIPTIONS	4-5
LOW-AMBIENT GUIDELINE	6
LONG LINE GUIDELINE	7
CABINET ASSEMBLY & COMPONENTS	7-10
ELECTRICAL	11-13
Aluminum Wire	11
Contactor	11
Capacitor	11
Cycle Protector	12
Crankcase Heater	12
Time-Delay Relay	13
PRESSURE SWITCHES	13
DEFROST THERMOSTAT	14
DEFROST CONTROL BOARD	14
OUTDOOR FAN MOTORS	17
COPELAND SCROLL COMPRESSOR	18
LG SCROLL COMPRESSOR	18
COMPRESSOR TROUBLESHOOTING	20-22
Compressor Failures	20
Mechanical Failures	20
Noisy Compressor	20
Electrical Failures	22
REFRIGERATION SYSTEM	23-29
Refrigerant	23
Servicing Systems on Roofs With Synthetic Materials	24
Brazing	23
Aluminum Brazing	23
Service Valves and Pump down	24
Liquid Line Filter Drier	27
Suction Line Filter Drier	27
Accumulator	28
Thermostatic Expansion Valve (TXV)	29
MAKE PIPING CONNECTIONS	30
REFRIGERATION SYSTEM REPAIR	31-34
Leak Detection	31
Coil Removal	31
Aluminum Coil Removal	32
Compressor Removal and Replacement	32
System Clean-Up After Burnout	33
Evacuation	33
CHECK CHARGE	34
TROUBLESHOOTING WITH SUPERHEAT	35
TWO-STAGE 286B, 289B, 180B, 187B	45-51
APPLICATION GUIDELINES	45
MODEL PLUG	45
Airflow Selections For 187B, 286B, 180B, 289B Using Non-Communicating (Non-infinity) Thermostats	46
Airflow Selection For FV4 Fan Coils For 180B, 187B, 286B, 289B Using Non-Communicating (non-Infinity) Thermostats	46
GENERAL INFORMATION	46
CHECK CHARGE	47
SYSTEM FUNCTION AND SEQUENCE OF OPERATION	48
TROUBLESHOOTING	51
TWO STAGE NON-COMMUNICATING 127A / 226A	56-58
Operating Ambient	56
Airflow Selections (ECM Furnaces)	56
Airflow Selection for Variable Speed Furnaces (non-communicating)	56
Airflow Selection for FV4C Fan Coils (non-communicating)	56
SYSTEM FUNCTION AND SEQUENCE OF OPERATION	57
CHECK CHARGE	58
CARE AND MAINTENANCE	59
PURON QUICK REFERENCE GUIDE	60
AC TROUBLESHOOTING CHART	61
HP TROUBLESHOOTING CHART - HEATING CYCLE	62
HP TROUBLESHOOTING CHART - COOLING CYCLE	63
INDEX OF TABLES	64

UNIT IDENTIFICATION

Troubleshooting Charts for Air Conditioners and Heat Pumps are provided in the appendix at back of this manual. They enable the service technician to use a systematic approach to locating the cause of a problem and correcting system malfunctions.

This section explains how to obtain the model and serial number from unit rating plate. These numbers are needed to service and repair the Puron® and R-22 air conditioner or heat pump. Model and serial numbers can be found on unit rating plate.

AIR CONDITIONER AND HEAT PUMP MODEL NUMBER NOMENCLATURE

1	2	3	4	5	6	7 8 9	10	11	12
1	1	3	A	N	A	036	N	N	N
Type	Tier	SEER	Major Series	Voltage	Variations	Cooling Capacity (Tons)	0	0	0
1 = AC 2 = HP	1 = Legacy RNC 2 = Legacy 6 = Preferred 8 = Evolution	3 = 13 SEER 4 = 14 SEER 5 = 15 SEER 6 = 16 SEER 8 = 18 SEER	A = Puron R = R-22	N = 208/230-1 or 208-230-1 P = 208/230-3 or 208-230-3 E = 460-3 T = 575-3	A = Standard C = Coastal F = Full Featured G = Dense Grill	018 = 1-1/2 024 = 2 030 = 2-1/2 036 = 3 042 = 3-1/2 048 = 4 060 = 5	Open	Open	Open

SERIAL NUMBER NOMENCLATURE

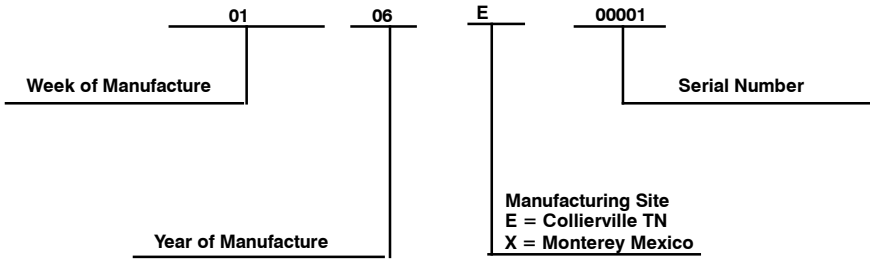

SAFETY CONSIDERATIONS

Installation, service, and repair of these units should be attempted only by trained service technicians familiar with standard service instruction and training material.

All equipment should be installed in accordance with accepted practices and unit Installation Instructions, and in compliance with all national and local codes. Power should be turned off when servicing or repairing electrical components. Extreme caution should be observed when troubleshooting electrical components with power on. Observe all warning notices posted on equipment and in instructions or manuals.

⚠ WARNING

UNIT OPERATION AND SAFETY HAZARD

Failure to follow this warning could result in personal injury or equipment damage.

Puron® (R-410A) systems operate at higher pressures than standard R-22 systems. Do not use R-22 service equipment or components on Puron® equipment. Ensure service equipment is rated for Puron®.

Refrigeration systems contain refrigerant under pressure. Extreme caution should be observed when handling refrigerants. Wear safety glasses and gloves to prevent personal injury. During normal system operations, some components are hot and can cause burns. Rotating fan blades can cause personal injury. Appropriate safety considerations are posted throughout this manual where potentially dangerous techniques are addressed.

INTRODUCTION

This document provides required system information necessary to install, service, repair or maintain the family air conditioners and heat pumps using R22 or Puron refrigerant.

Refer to the unit Product Data for rating information, electrical data, required clearances, additional component part numbers and related pre-sale data. Installation Instructions are also available per specific models.

Information in this document refers to units produced in 2012 and later. Refer to Service Manual number 24-25-3SM for products produced 2006 - 2012.

INSTALLATION GUIDELINE

Residential New Construction

Specifications for these units in the residential new construction market require the outdoor unit, indoor unit, refrigerant tubing sets, metering device, and filter drier listed in Product Data (PD). DO NOT DEVIATE FROM PD. Consult unit Installation Instructions for detailed information.

Add-On Replacement (Retrofit) - R22 to Puron

Specifications for these units in the add-on replacement/retrofit market require change-out of outdoor unit, metering device, and all capillary tube coils. Change-out of indoor coil is recommended. There can be no deviation.

1. If system is being replaced due to compressor electrical failure, assume acid is in system. If system is being replaced for any other reason, use approved acid test kit to determine acid level. If even low levels of acid are detected install factory approved, 100 percent activated alumina suction-line filter drier in addition to the factory supplied liquid-line filter drier. Remove the suction line filter drier as soon as possible, with a maximum of 72 hr.
2. Drain oil from low points or traps in suction-line and evaporator if they were not replaced.
3. Change out indoor coil or verify existing coil is listed in the Product Data Digest.
4. Unless indoor unit is equipped with a Puron® approved metering device, change out metering device to factory supplied or field-accessory device specifically designed for Puron®.
5. Replace outdoor unit with Puron® outdoor unit.
6. Install factory-supplied liquid-line filter drier.

⚠ CAUTION

UNIT DAMAGE HAZARD

Failure to follow this caution may result in equipment damage or improper operation.

Never install suction-line filter drier in the liquid-line of a Puron® system.

7. If suction-line filter drier was installed for system clean up, operate system for 10 hr. Monitor pressure drop across drier. If pressure drop exceeds 3 psig, replace suction-line and liquid-line filter driers. Be sure to purge system with dry nitrogen and evacuate when replacing filter driers. Continue to monitor pressure drop across suction-line filter drier. After 10 hr of runtime, remove suction-line filter drier and replace liquid-line filter drier. Never leave suction-line filter drier in system longer than 72 hr (actual time).
8. Charge system. (See unit information plate.)

Seacoast

Coastal units are available in selected models and sizes of Air Conditioners and Heat Pumps. These units have protection to help resist the corrosive coastal environment. Features include:

- Armor plate fins and epoxy coated coils
- Complete baked-on paint coverage (both sides of external sheet metal and grilles)
- Paint coated screws

Coastal environments are considered to be within 2 miles of the ocean. Salt water can be carried as far away as 2 miles from the coast by means of sea spray, mist or fog. Line-of-sight distance from the ocean, prevailing wind direction, relative humidity, wet/dry time, and coil temperatures will determine the severity of corrosion potential in the coastal environment.

ACCESSORIES

Table 1—Required Field-Installed Accessories for Air Conditioners

ACCESSORY	REQUIRED FOR LOW–AMBIENT COOLING APPLICATIONS (Below 55°F/12.8°C)	REQUIRED FOR LONG LINE APPLICATIONS*	REQUIRED FOR SEA COAST APPLICATIONS (Within 2 miles/3.22 km)
Ball Bearing Fan Motor	Yes †‡	No	No
Compressor Start Assist Capacitor and Relay	Yes**	Yes	No
Crankcase Heater	Yes ‡	Yes ‡	No
Evaporator Freeze Thermostat	Yes ‡	No	No
Hard Shut–Off TXV	Yes	Yes	Yes
Liquid Line Solenoid Valve	No	No	No
Motor Master® or Low–ambient Pressure Switch	Yes ‡	No	No
Support Feet	Recommended	No	Recommended
Winter Start Control	Yes ‡	No	No

* For tubing line sets between 80 and 200 ft. (24.38 and 60.96 m) and/or 35 ft. (10.7 m) vertical differential, refer to Residential Piping and Longline Guideline.
† Additional requirement for Low–Ambient Controller (full modulation feature) MotorMaster® Control.
‡ Evolution 2–stage units come standard with this accessory.
** Not required on 2–stage

Table 2—Required Field-Installed Accessories for Heat Pumps

ACCESSORY	REQUIRED FOR LOW–AMBIENT COOLING APPLICATIONS (Below 55°F / 12.8°C)	REQUIRED FOR LONG LINE APPLICATIONS*	REQUIRED FOR SEA COAST APPLICATIONS (Within 2 miles / 3.22 km)
Accumulator	Standard	Standard	Standard
Ball Bearing Fan Motor	Yes †‡	No	No
Compressor Start Assist Capacitor and Relay	Yes **	Yes	No
Crankcase Heater	Yes ‡	Yes ‡	No
Evaporator Freeze Thermostat	Yes ‡	No	No
Hard Shutoff TXV	Yes	Yes	Yes
Isolation Relay	Yes	No	No
Liquid Line Solenoid Valve	No	See Long–Line Application Guideline	No
Motor Master® Control or Low Ambient Switch	Yes ‡	No	No
Support Feet	Recommended	No	Recommended

* For tubing line sets between 80 and 200 ft. (24.38 and 60.96 m) and/or 20 ft. (6.09 m) vertical differential, refer to Residential Piping and Longline Guideline.
† Additional requirement for Low–Ambient Controller (full modulation feature) MotorMaster® Control.
‡ Evolution 2–stage units come standard with this accessory.
** Not required on 2–stage

Always Ask For
FACTORY AUTHORIZED PARTS

ACCESSORY DESCRIPTIONS

Refer to Table 1 for an Accessory Usage Guide for Air Conditioners and Table 2 for Heat Pumps. Refer to the appropriate section below for a description of each accessory and its use.

1. Crankcase Heater

An electric resistance heater which mounts to the base of the compressor to keep the lubricant warm during off cycles. Improves compressor lubrication on restart and minimizes the chance of liquid slugging.

Usage Guideline:

Required in low ambient cooling applications.

Required in long line applications.

Suggested in all commercial applications.

2. Evaporator Freeze Thermostat

An SPST temperature-actuated switch that stops unit operation when evaporator reaches freeze-up conditions.

Usage Guideline:

Required when low ambient kit has been added.

3. Isolation Relay

An SPDT relay which switches the low-ambient controller out of the outdoor fan motor circuit when the heat pump switches to heating mode.

Usage Guideline:

Required in all heat pumps where low ambient kit has been added

4. Low-Ambient Pressure Switch

A fan-speed control device activated by a temperature sensor, designed to control condenser fan motor speed in response to the saturated, condensing temperature during operation in cooling mode only. For outdoor temperatures down to -20°F (-28.9°C), it maintains condensing temperature at 100°F ± 10°F (37.8°C ± 12°C).

Usage Guideline:

A Low Ambient Controller must be used when cooling operation is used at outdoor temperatures below 55°F (12.8°C).

Suggested for all commercial applications.

5. Outdoor Air Temperature Sensor

Designed for use with Bryant Thermostats listed in this publication. This device enables the thermostat to display the outdoor temperature. This device is required to enable special thermostat features such as auxiliary heat lock out.

Usage Guideline:

Suggested for all Bryant thermostats listed in this publication.

6. Thermostatic Expansion Valve (TXV)

A modulating flow-control valve which meters refrigerant liquid flow rate into the evaporator in response to the superheat of the refrigerant gas leaving the evaporator.

Kit includes valve, adapter tubes, and external equalizer tube. Hard shut off types are available.

Usage Guideline:

Accessory required to meet ARI rating and system reliability, where indoor not equipped.

Hard shut off TXV or LLS required in heat pump long line applications.

Required for use on all zoning systems.

7. Time-Delay Relay

An SPST delay relay which briefly continues operation of indoor blower motor to provide additional cooling after the compressor cycles off.

NOTE: Most indoor unit controls include this feature. For those that do not, use the guideline below.

Usage Guideline:

Accessory required to meet ARI rating, where indoor not equipped.

8. Wind Baffle

Use only in installations where high winds are prevalent to prevent cross currents from causing abnormal control operation. For construction, refer to Fig. 1.

NOTE: When wind baffles are used, raising unit off of mounting pad with 4-in. support feet or unit risers is REQUIRED. This provides better airflow for moderate and high ambient temperatures.

9. Winter Start Control

This control is designed to alleviate nuisance opening of the low-pressure switch by bypassing it for the first 3 minutes of operation. This control is for AC units operating in low ambient cooling but is not required for Heat Pumps. Heat pumps have a loss of charge switch rather than a low pressure switch and nuisance trips should not be an issue.

LOW-AMBIENT COOLING GUIDELINE

The minimum operating temperature for these units in cooling mode is 55°F/12.7°C outdoor ambient without additional accessories. This equipment may be operated in cooling mode at ambient temperatures below 55°F/12.7°C when the accessories listed in Table 1 or 2 are installed. Wind baffles are required when operating in cooling mode at ambients below 55°F/12.7°C. Refer to Fig. 1 for wind baffle construction details for Base through Deluxe models. First production of Preferred units are capable of low ambient cooling only with pressure switch or Evolution UI control. Motor Master was not available. See most current Product Data for updates. Evolution 2-Stage units are capable of low ambient cooling only with Evolution UI control.

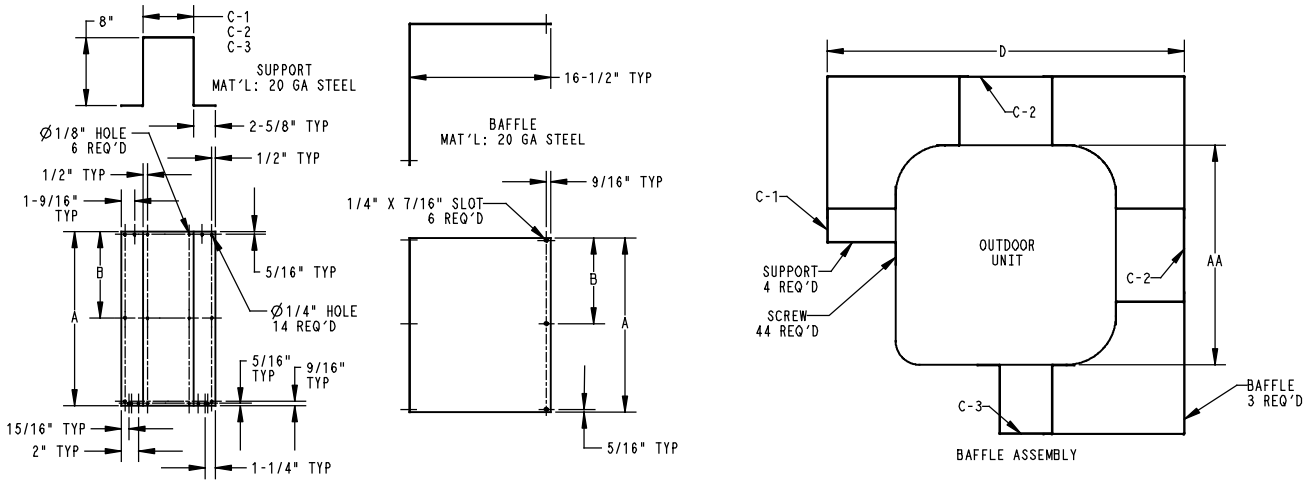

A06450

Entry, Mid Tier, and 4 Sided Deluxe Units (in.)								
UNIT SIZE	AA	UNIT HEIGHT	A	B	C–1	C–2	C–3	D
Mini Base	23–1/8	25–5/16	20–3/8	10–1/16	1–5/16	8–1/4	3–1/2	39–1/4
		28–11/16	23–13/16	11–3/4				
		32–1/8	27–3/16	13–1/2				
		35–1/2	30–5/8	15–3/16				
		38–15/16	34	16–7/8				
		42–5/16	37–3/8	18–9/16				
		45–11/16	40–13/16	20–1/4				
Small	25–3/4	25	20–3/8	10–1/16	3–15/16	10–7/8	6–1/8	41–7/8
		28–7/16	23–13/16	11–3/4				
		31–13/16	27–3/16	13–1/2				
		35–1/4	30–5/8	15–3/16				
		38–5/8	34	16–7/8				
		42	37–3/8	18–9/16				
		45–7/16	40–13/16	20–1/4				
Medium	31–1/4	25–1/2	20–3/8	10–1/16	9–3/8	16–5/16	11–9/16	47–3/8
		28–15/16	23–13/16	11–3/4				
		32–5/16	27–3/16	13–1/2				
		35–3/4	30–5/8	15–3/16				
		39–1/8	34	16–7/8				
		42–1/2	37–3/8	18–9/16				
		45–15/16	40–13/16	20–1/4				
Large	35	25–1/2	20–3/8	10–1/16	13–3/16	20–1/8	15–3/8	51–1/8
		28–15/16	23–13/16	11–3/4				
		32–5/16	27–3/16	13–1/2				
		35–3/4	30–5/8	15–3/16				
		39–1/8	34	16–7/8				
		42–1/2	37–3/8	18–9/16				
		45–15/16	40–13/16	20–1/4				

Fig. 1 – Base / Mid-Tier / Deluxe (4-sided) Baffle Assembly

LONG LINE GUIDELINE

Refer to Residential Piping and Long Line Guideline for air conditioner and heat pump systems using Puron refrigerant or Long Line Guideline for R-22 Air Conditioners and Heat Pumps.

CABINET ASSEMBLY

Basic Cabinet Designs

Certain maintenance routines and repairs require removal of the cabinet panels. There are 3 basic cabinet designs for air conditioning and heat pumps. Each design tier has options of standard or dense grills. (See Fig. 2).

Evolution 2–Stage

Evolution

Preferred

Legacy

Fig. 2 – Cabinet Designs

Access Compressor Or Other Internal Cabinet Components

NOTE: It is not necessary to remove the top cover to gain access. Removing the top cover may cause grill panels, corner posts, louvers or coils to be damaged. It is recommended to protect the top cover from damage of tools, belt buckles, etc. while servicing from the top.

1. Should the unit height allow components to be accessed from the top of the unit, follow procedures for removing fan motor assembly. Access components through the top cap.
2. Large components may not be removed easily without having access from the top and side. Side access may allow procedures such as brazing, cutting, and removal easier. Follow procedures below:

a. Follow procedures to remove the fan motor assembly.

b. Air conditioning units only, remove the screws from the top of the electrical control panel. (Heat pumps will not have screws holding the electrical control panel in place at the top once the control box cover has been removed.)

c. Remove the base pan screws holding the control panel and lift off the unit.

Certain maintenance routines and repairs require removal of cabinet panels.

Remove Top Cover - Mid-Tier / Deluxe

1. Turn off all power to outdoor and indoor units.
2. Remove access panel.
3. Remove information plate.
4. Disconnect fan motor wires and cut wire ties. Remove wires from control box. Refer to unit wiring label.
5. Remove screws holding top cover to louver panels.
6. Lift top cover from unit.
7. Reverse sequence for reassembly.

Remove Fan Motor Assembly - Mid-Tier / Deluxe

1. Perform items 1 through 6 from above.
2. Remove nuts securing fan motor to top cover.
3. Remove motor and fan blade assembly.
4. Reverse sequence for reassembly.
5. Prior to applying power, check that fan rotates freely.

Control Box Cover—Legacy Products

This panel contains much of the same information as the information plate mentioned previously, but is designed only to cover the control box.

Remove Top Cover—Legacy Products

1. Turn off all power to outdoor an indoor units.
2. Remove 5 screws holding top cover to coil grille and coil tube sheet.
3. Remove 2 screws holding control box cover.
4. Remove 2 screws holding information plate.
5. Disconnect fan motor wires, cut any wire ties, and move wires out of control box and through tube clamp on back of control box.
6. Lift top cover from unit.
7. Reverse sequence for reassembly.

Remove Fan Motor Assembly—Legacy Products

1. Perform items 1, 3, 4, and 5 above. (**Note**: item 2 is not required.)
2. Remove 4 screws holding wire basket to top cover.
3. Lift wire basket from unit.
4. Remove nuts holding fan motor to wire basket.
5. Remove motor and fan blade assembly.
6. Pull wires through wire raceway to change motor.
7. Reverse sequence for reassembly.
8. Prior to applying power, check that fan rotates freely.

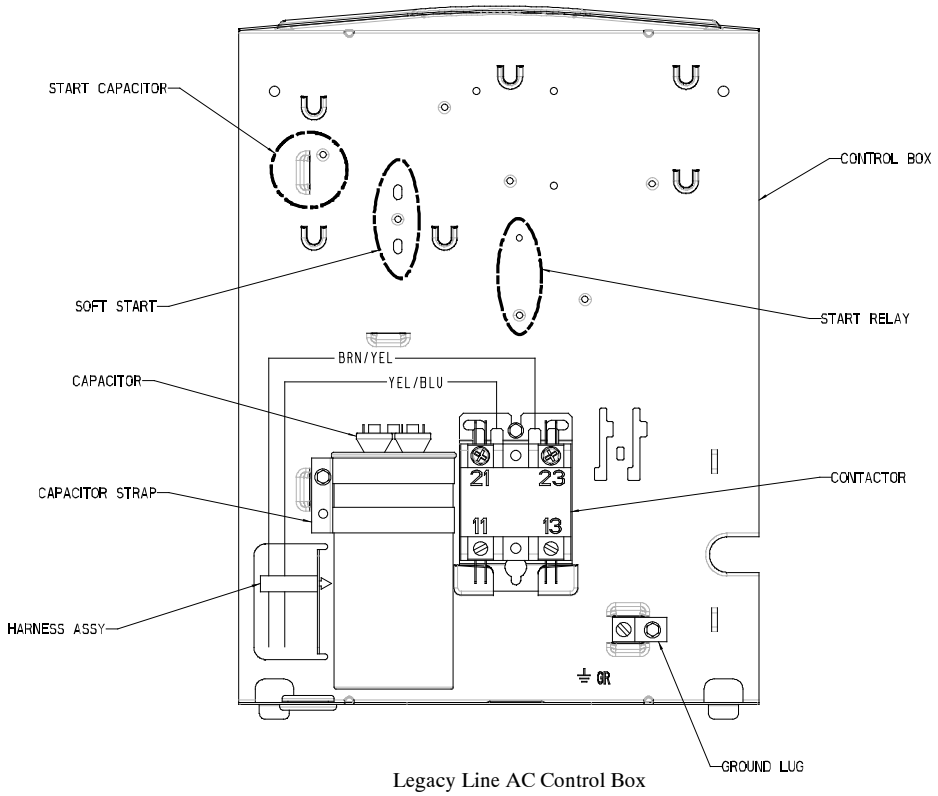

Legacy Line AC Control Box

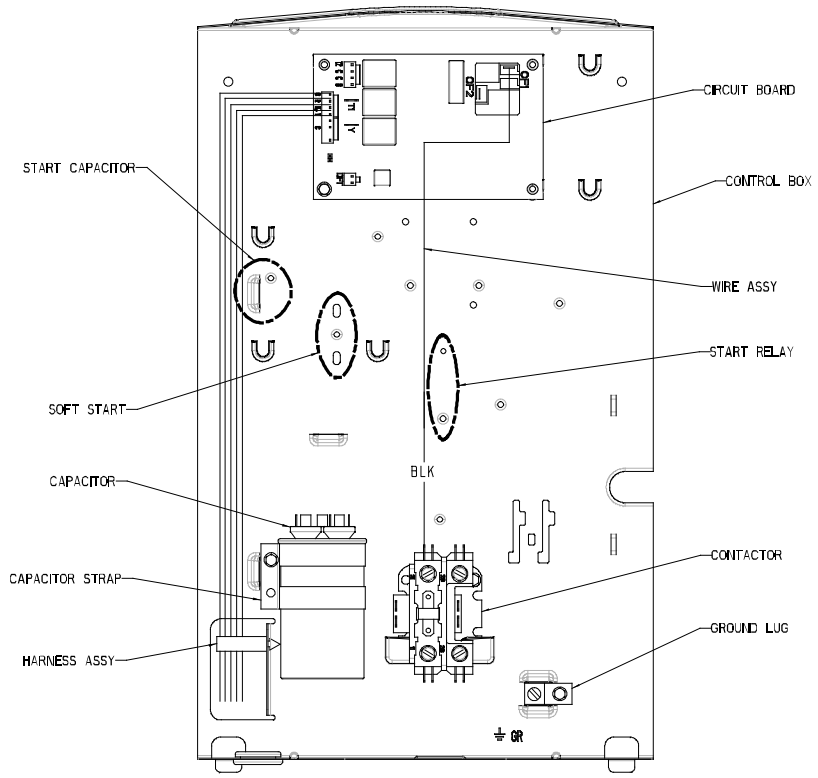

Preferred HP Control Box

Fig. 3 – Legacy and Preferred Line Control Box Identification

Labeling

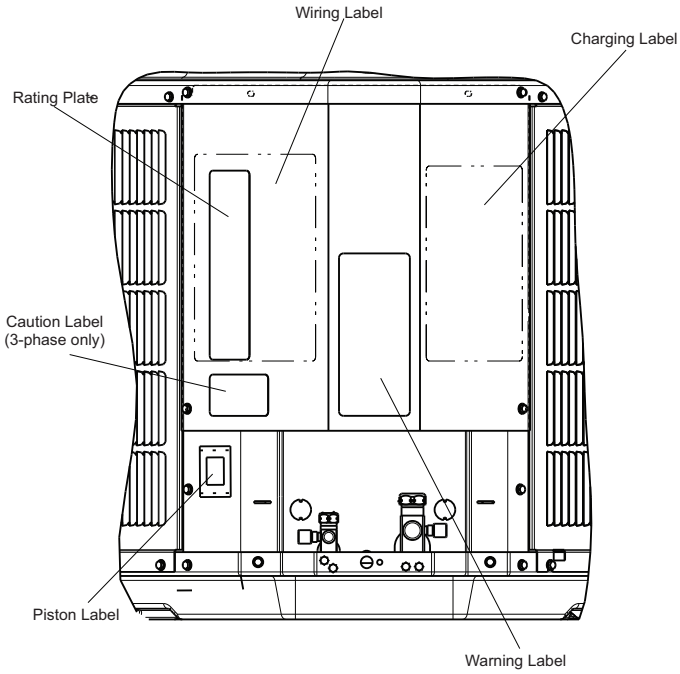

Mid – Tier / Deluxe

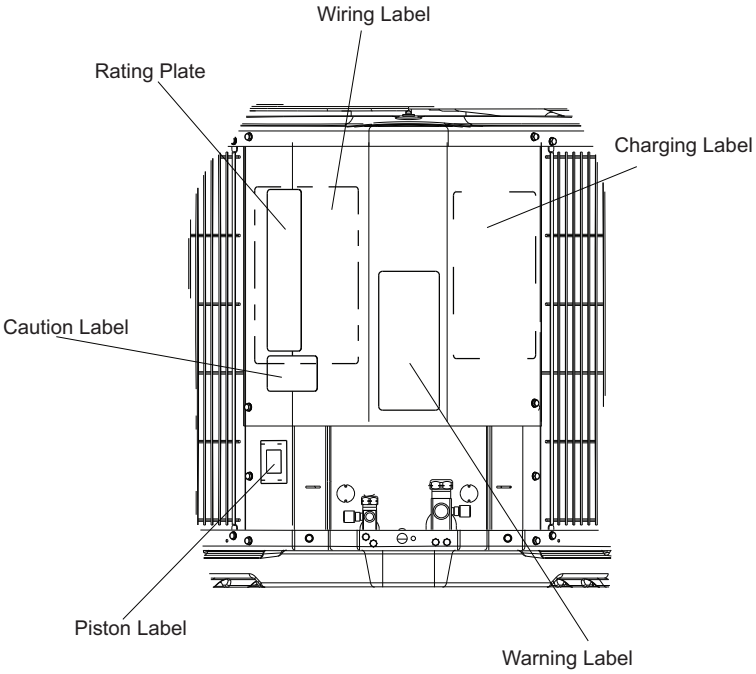

Entry

Fig. 4 – Label Locations

ELECTRICAL

⚠ WARNING

ELECTRICAL SHOCK HAZARD

Failure to follow this warning could result in personal injury or death.

Exercise extreme caution when working on any electrical components. Shut off all power to system prior to troubleshooting. Some troubleshooting techniques require power to remain on. In these instances, exercise extreme caution to avoid danger of electrical shock. ONLY TRAINED SERVICE PERSONNEL SHOULD PERFORM ELECTRICAL TROUBLESHOOTING.

Aluminum Wire

⚠ CAUTION

UNIT OPERATION AND SAFETY HAZARD

Failure to follow this caution may result in equipment damage or improper operation.

Aluminum wire may be used in the branch circuit (such as the circuit between the main and unit disconnect), but only copper wire may be used between the unit disconnect and the unit.

Whenever aluminum wire is used in branch circuit wiring with this unit, adhere to the following recommendations.

Connections must be made in accordance with the National Electrical Code (NEC), using connectors approved for aluminum wire. The connectors must be UL approved (marked Al/Cu with the UL symbol) for the application and wire size. The wire size selected must have a current capacity not less than that of the copper wire specified, and must not create a voltage drop between service panel and unit in excess of 2 of unit rated voltage. To prepare wire before installing connector, all aluminum wire must be “brush-scratched” and coated with a corrosion inhibitor such as Pentrox A. When it is suspected that connection will be exposed to moisture, it is very important to cover entire connection completely to prevent an electrochemical action that will cause connection to fail very quickly. Do not reduce effective size of wire, such as cutting off strands so that wire will fit a connector. Proper size connectors should be used. Check all factory and field electrical connections for tightness. This should also be done after unit has reached operating temperatures, especially if aluminum conductors are used.

Contactor

The contactor provides a means of applying power to unit using low voltage (24v) from transformer in order to power contactor coil. Depending on unit model, you may encounter single- or double-pole contactors. Exercise extreme caution when troubleshooting as 1 side of line may be electrically energized. The contactor coil is powered by 24vac. If contactor does not operate:

1. With power off, check whether contacts are free to move. Check for severe burning or arcing on contact points.
2. With power off, use ohmmeter to check for continuity of coil. Disconnect leads before checking. A low resistance reading is normal. Do not look for a specific value, as different part numbers will have different resistance values.
3. Reconnect leads and apply low-voltage power to contactor coil. This may be done by leaving high-voltage power to outdoor unit off and turning thermostat to cooling. Check voltage at coil with voltmeter. Reading should be between 20v and 30v. Contactor should pull in if voltage is correct and coil is good. If contactor does not pull in, replace contactor.
4. With high-voltage power off and contacts pulled in, check for continuity across contacts with ohmmeter. A very low or 0 resistance should be read. Higher readings could indicate burned or pitted contacts which may cause future failures.

Capacitor

⚠ WARNING

ELECTRICAL SHOCK HAZARD

Failure to follow this warning could result in personal injury or equipment damage.

Capacitors can store electrical energy when power is off. Electrical shock can result if you touch the capacitor terminals and discharge the stored energy. Exercise extreme caution when working near capacitors. With power off, discharge stored energy by shorting across the capacitor terminals with a 15,000-ohm, 2-watt resistor.

NOTE: If bleed resistor is wired across start capacitor, it must be disconnected to avoid erroneous readings when ohmmeter is applied across capacitor. (S)

⚠ WARNING

ELECTRICAL SHOCK HAZARD

Failure to follow this warning could result in personal injury or equipment damage.

Always check capacitors with power off. Attempting to troubleshoot a capacitor with power on can be dangerous. Defective capacitors may explode when power is applied. Insulating fluid inside is combustible and may ignite, causing burns.

Capacitors are used as a phase-shifting device to aid in starting certain single-phase motors. Check capacitors as follows:

1. With power off, discharge capacitors as outlined above. Disconnect capacitor from circuit. Put ohmmeter on R X 10k scale. Using an analog ohmmeter, check each terminal to ground (use capacitor case). Discard any capacitor which measures 1/2 scale deflection or less. Place ohmmeter leads across capacitor and place on R X 10k scale. Meter should jump to a low resistance value and slowly climb to higher value. Failure of meter to do this indicates an open capacitor. If resistance stays at 0 or a low value, capacitor is internally shorted.
2. Capacitance testers are available which will read value of capacitor. If value is not within ±10 percent value stated on capacitor, it should be replaced. If capacitor is not open or shorted, the capacitance value is calculated by measuring voltage across capacitor and current it draws.

⚠ WARNING

ELECTRICAL SHOCK HAZARD

Failure to follow this warning could result in personal injury or death.

Exercise extreme caution when taking readings while power is on.

Use following formula to calculate capacitance:

Capacitance (mfd)= (2650 X amps)/volts

3. Remove any capacitor that shows signs of bulging, dents, or leaking. Do not apply power to a defective capacitor as it may explode.

Sometimes under adverse conditions, a standard run capacitor in a system is inadequate to start compressor. In these instances, a start assist device is used to provide an extra starting boost to compressor motor. This device is called a positive temperature coefficient (PTC) or start thermistor. It is a resistor wired in parallel with the run capacitor. As current flows through the PTC at start-up, it heats up. As PTC heats up, its resistance increases greatly until it effectively lowers the current through itself to an extremely low value. This, in effect, removes the PTC from the circuit.

After system shutdown, resistor cools and resistance value returns to normal until next time system starts. Thermistor device is adequate for most conditions, however, in systems where off cycle is short, device cannot fully cool and becomes less effective as a start device. It is an easy device to troubleshoot. Shut off all power to system.

Check thermistor with ohmmeter as described below. Shut off all power to unit. Remove PTC from unit. Wait at least 10 minutes for PTC to cool to ambient temperature.

Measure resistance of PTC with ohmmeter.

The cold resistance (RT) of any PTC device should be approximately 100-180 percent of device ohm rating.

12.5-ohm PTC = 12.5-22.5 ohm resistance (beige color)

If PTC resistance is appreciably less than rating or more than 200 percent higher than rating, device is defective.

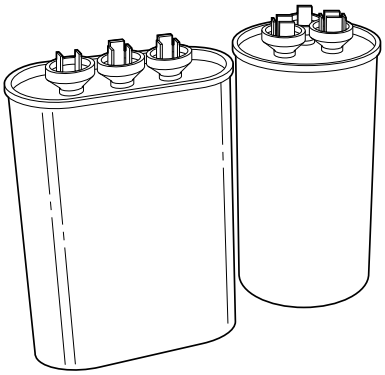

A94006

Fig. 5 – Capacitors

Cycle Protector

Bryant thermostats have anti-cycle protection built in to protect the compressor. Should a non-Bryant stat be utilized, it is recommended to add a cycle protector to the system. Solid-state cycle protector protects unit compressor by preventing short cycling. After a system shutdown, cycle protector provides for a 5 ± 2-minute delay before compressor restarts. On normal start-up, a 5-minute delay occurs before thermostat closes. After thermostat closes, cycle protector device provides a 3-sec delay.

Cycle protector is simple to troubleshoot. Only a voltmeter capable of reading 24v is needed. Device is in control circuit, therefore, troubleshooting is safe with control power (24v) on and high-voltage power off.

With high-voltage power off, attach voltmeter leads across T1 and T3, and set thermostat so that Y terminal is energized. Make sure all protective devices in series with Y terminal are closed. Voltmeter should read 24v across T1 and T3. With 24v still applied, move voltmeter leads to T2 and T3. After 5 ± 2 minutes, voltmeter should read 24v, indicating control is functioning normally. If no time delay is encountered or device never times out, change control.

Crankcase Heater

Crankcase heater is a device for keeping compressor oil warm. By keeping oil warm, refrigerant does not migrate to and condense in compressor shell when the compressor is off. This prevents flooded starts which can damage compressor.

On units that have a single-pole contactor, the crankcase heater is wired in parallel with contactor contacts and in series with compressor. (See Fig. 6.) When contacts open, a circuit is completed from line side of contactor, through crankcase heater, through run windings of compressor, and to other side of line. When contacts are closed, there is no circuit through crankcase heater because both leads are connected to same side of line. This allows heater to operate when system is not calling for cooling. The heater does not operate when system is calling for cooling.

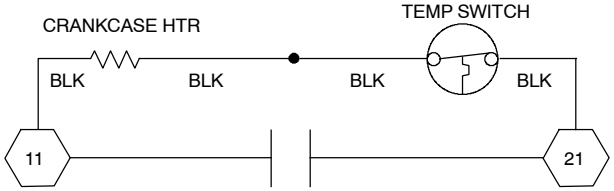

A97586

Fig. 6 – Wiring for Single-Pole Contactor

For 460V units, the CCH is controlled by a temperature switch and relay. The relay is controlled by the temperature switch that is wired in series with the low voltage indoor transformer connections, R & C, from the low voltage harness assembly. If the OD ambient is above 85°F (29.4°C), the CCH switch is open and the relay will be de-energized. In this state, the CCH will not be energized. If the OD ambient goes below 65°F (18.3°C) and doesn't rise above 85°F (29.4°C), the CCH switch is closed and the relay will be energized. In this state, the CCH will be energized when the compressor contactor is open. See Fig. 7.

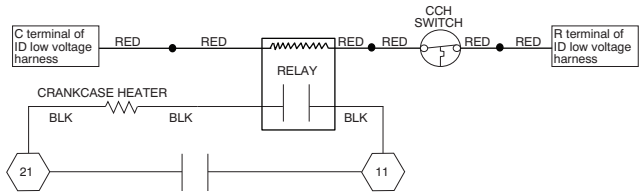

A170062

Fig. 7 – Wiring for 460 volt

The crankcase heater is powered by high-voltage power of unit. Use extreme caution troubleshooting this device with power on. The easiest method of troubleshooting is to apply voltmeter across crankcase heater leads to see if heater has power. Do not touch heater. Carefully feel area around crankcase heater. If warm, crankcase heater is probably functioning. Do not rely on this method as absolute evidence heater is functioning. If compressor has been running, the area will still be warm.

With power off and heater leads disconnected, check across leads with ohmmeter. Do not look for a specific resistance reading. Check for resistance or an open circuit. Change heater if an open circuit is detected.

Time-Delay Relay

The TDR is a solid-state control, recycle delay timer which keeps indoor blower operating for 90 sec after thermostat is satisfied. This delay enables blower to remove residual cooling in coil after compression shutdown, thereby improving efficiency of system. The sequence of operation is that on closure of wall thermostat and at end of a fixed on delay of 1 sec, fan relay is energized. When thermostat is satisfied, an off delay is initiated. When fixed delay of 90 ± 20 sec is completed, fan relay is de-energized and fan motor stops. If wall thermostat closes during this delay, TDR is reset and fan relay remains energized. TDR is a 24v device that operates within a range of 15v to 30v and draws about 0.5 amps. If the blower runs continuously instead of cycling off when the fan switch is set to AUTO, the TDR is probably defective and must be replaced.

Pressure Switches

Pressure switches are protective devices wired into control circuit (low voltage). They shut off compressor if abnormally high or low pressures are present in the refrigeration circuit. Puron pressure switches are specifically designed to operate with Puron® systems. R-22 pressure switches must **not** be used as replacements for the Puron® air conditioner or heat pump. Puron® pressure switches are identified by a pink stripe down each wire.

Low-Pressure Switch (AC Only)

The low-pressure switch is located on suction line and protects against low suction pressures caused by such events as loss of charge, low airflow across indoor coil, dirty filters, etc. It opens on a pressure drop at about 50 psig for Puron and about 27 for R22. If system pressure is above this, switch should be closed. To check switch:

1. Turn off all power to unit.
2. Disconnect leads on switch.
3. Apply ohmmeter leads across switch. You should have continuity on a good switch.

NOTE: Because these switches are attached to refrigeration system under pressure, it is not advisable to remove this device for troubleshooting unless you are reasonably certain that a problem exists. If switch must be removed, remove and recover all system charge so that pressure gauges read 0 psi. Never open system without breaking vacuum with dry nitrogen.

⚠ CAUTION

PERSONAL INJURY HAZARD

Failure to follow this caution may result in personal injury.

Wear safety glasses, protective clothing, and gloves when handling refrigerant.

To replace switch:

1. Apply heat with torch to solder joint and remove switch.

⚠ CAUTION

PERSONAL INJURY HAZARD

Failure to follow this caution may result in personal injury.

Wear safety glasses when using torch. Have quenching cloth available. Oil vapor in line may ignite when switch is removed.

2. Braze in 1/4-in. flare fitting and screw on replacement pressure switch.

High-Pressure Switch (AC & HP)

The high-pressure switch is located in liquid line and protects against excessive condenser coil pressure. It opens around 610 or 670 psig for Puron and 400 psig for R22 (+/- 10 for both). Switches close at 298 (+/- 20) psig for R-22 and 420 or 470 (+/- 25) psig for Puron. High pressure may be caused by a dirty condenser coil, failed fan motor, or condenser air re-circulation.

To check switch:

1. Turn off all power to unit.
2. Disconnect leads on switch.
3. Apply ohmmeter leads across switch. You should have continuity on a good switch.

NOTE: Because these switches are attached to refrigeration system under pressure, it is not advisable to remove this device for troubleshooting unless you are reasonably certain that a problem exists. If switch must be removed, remove and recover all system charge so that pressure gauges read 0 psi. Never open system without breaking vacuum with dry nitrogen.

⚠ CAUTION

PERSONAL INJURY HAZARD

Failure to follow this caution may result in personal injury.

Wear safety glasses, protective clothing, and gloves when handling refrigerant.

To replace switch:

1. Apply heat with torch to solder joint and remove switch.

⚠ CAUTION

PERSONAL INJURY HAZARD

Failure to follow this caution may result in personal injury.

Wear safety glasses when using torch. Have quenching cloth available. Oil vapor in line may ignite when switch is removed.

2. Braze in 1/4-in. flare fitting and replace pressure switch.

Loss of Charge Switch (HP Only)

Located on liquid line of heat pump only, the liquid line pressure switch functions similar to conventional low-pressure switch.

Because heat pumps experience very low suction pressures during normal system operation, a conventional low-pressure switch cannot be installed on suction line. This switch is installed in liquid line instead and acts as loss-of-charge protector. The liquid-line is the low side of the system in heating mode. It operates identically to low-pressure switch except it opens at 23 (+/- 5) psig for Puron and 7 (+/- 5) psig for R22 and closes at 55 (+/- 5) psig for Puron and 22 (+/- 5) for R22 Two-stage heat pumps have the low-pressure switch located on the suction line. The two-stage control board has the capability to ignore low-pressure switch trips during transitional (defrost) operation to avoid nuisance trips. Troubleshooting and removing this switch is identical to procedures used on other switches. Observe same safety precautions.

Defrost Thermostat

Defrost thermostat signals heat pump that conditions are right for defrost or that conditions have changed to terminate defrost. It is a thermally actuated switch clamped to outdoor coil to sense its temperature. Normal temperature range is closed at 30° ± 3°F and open at 65° ± 5°F. Defrost thermostats are used in Base and Comfort models, a coil temperature thermistor is used in Preferred and Evolution units.

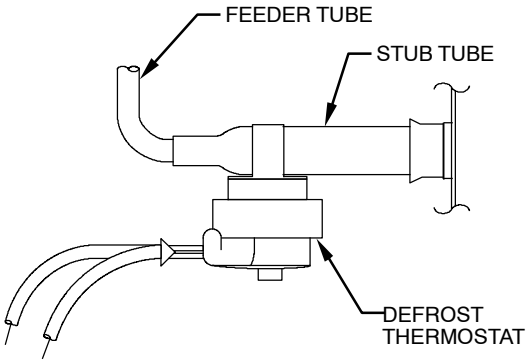

Fig. 8 – Defrost Thermostat Location

Check Defrost Thermostat

There is a liquid header with a brass distributor and feeder tube going into outdoor coil. At the end of 1 of the feeder tubes, there is a 3/8-in. OD stub tube approximately 3 in. long. (See Fig. 8.) The defrost thermostat should be located on stub tube. Note that there is only 1 stub tube used with a liquid header, and on most units it is the bottom circuit.

NOTE: The defrost thermostat must be located on the liquid side of the outdoor coil on the bottom circuit and as close to the coil as possible.

Defrost Control Board

Troubleshooting defrost control involves a series of simple steps that indicate whether or not board is defective.

NOTE: This procedure allows the service technician to check control board and defrost thermostat for defects. First, troubleshoot to make sure unit operates properly in heating and cooling modes. This ensures operational problems are not attributed to the defrost control board.

HK32EA001 DEFROST CONTROL

The HK32EA001 defrost control is used in all Legacy series heat pump models. Its features include selectable defrost intervals of 30, 60, 90 minutes, and standard defrost speed up capability. This section describes the sequence of operation and trouble shooting methods for this control.

Cooling Sequence of Operation (HK32EA001)

On a call for cooling, thermostat makes R-O, R-Y, and R-G. Circuit R-O energizes reversing valve switching it to cooling position. Circuit R-Y sends low voltage through the safeties and energizes the contactor, which starts the compressor and energizes the T1 terminal on the circuit board. This will energize the OF2 fan relay which starts the outdoor fan motor.

When the cycle is complete, R-Y is turned off and compressor and outdoor fan should stop. With Bryant thermostats, the O terminal remains energized in the cooling mode. If the mode is switched to heat or Off, the valve is de-energized. There is no compressor delay built into this control.

Heating Sequence of Operation (KH32EA001)

On a call for heating, thermostat makes R-Y, and R-G. Circuit R-Y sends low voltage through the safeties and energizes the contactor, which starts the compressor and energizes the T1 terminal on the circuit board. The T1 terminal energizes the defrost logic. This will energize the OF2 fan relay start the outdoor motor. The T1 terminal must be energized for defrost to function.

When the cycle is complete, R-Y is turned off and the compressor and outdoor fan should stop. There is no compressor delay built into this control.

Defrost Sequence (HK32EA001)

The defrost control is a time/temperature control that has field selectable settings of 30, 60, and 90 minutes. These represent the amount of time that must pass after closure of the defrost thermostat before the defrost sequence begins.

The defrost thermostat senses coil temperature throughout the heating cycle. When the coil temperature reaches the defrost thermostat setting of approximately 32ºF, it will close, which energizes the DFT terminal and begins the defrost timing sequence. When the DTF has been energized for the selected time, the defrost cycle begins, and the control shifts the reversing valve into cooling position, and turns the outdoor fan off. This shifts hot gas flow into the outdoor coil which melts the frost from the coil. The defrost cycle is terminated when defrost thermostat opens at approximately 65ºF, or automatically after 10 minutes.

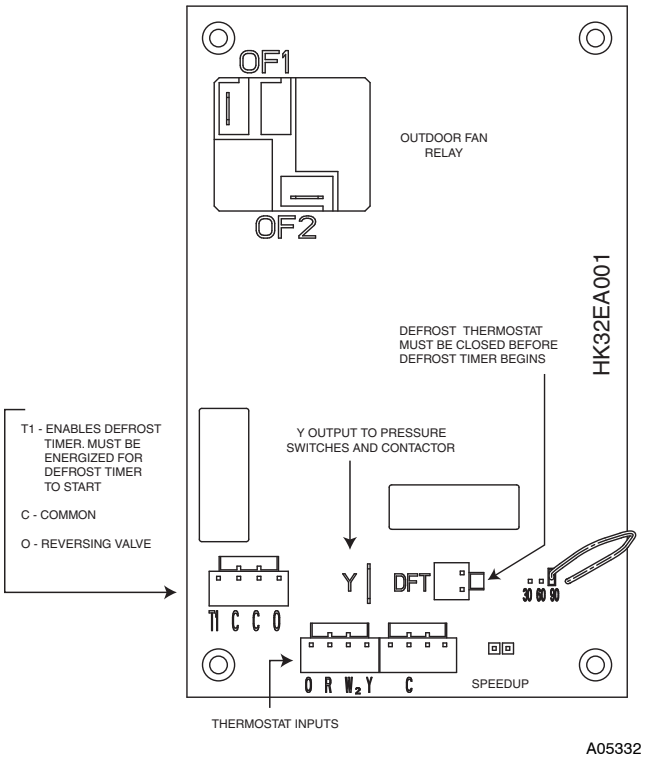

Fig. 9 – HK32EA001 Defrost Control

Troubleshooting (HK32EA001)

If outdoor unit will not run:

1. Does the Y input has 24 volts from thermostat? If not, check thermostat or wire. If yes proceed to #2
2. The Y spade terminal on the circuit board should have 24 volts if Y input is energized. This output goes through the pressure switches and to the contactor. If 24 volts is present on the Y spade terminal, and the contactor is not closed, check voltage on contactor coil. If no voltage is present, check for opened pressure switch.
3. If voltage is present and contactor is open, contactor may be defective. Replace contactor if necessary.
4. If contactor is closed and unit will still not run, check wiring, capacitor and compressor

Defrost Speedup (KH32EA001)

To test the defrost function on these units, speed up pins are provided on the circuit board. To force a defrost cycle, the defrost thermostat must be closed, or the defrost thermostat pins must be jumpered. Follow the steps below to force a defrost cycle:

1. Jumper the DFT input
2. Short the speed up pins. This speeds up the defrost timer by a factor of 256. The longer the defrost interval setting, the longer the pins must be shorted to speed through the timing. For example, if interval is 90 min, the speed up will take (90/256)min x (60seconds /minute)= 21 seconds max. This could be shorter depending on how much time has elapsed since the defrost thermostat closed.
3. Remove the short immediately when the unit shifts into defrost. Failure to remove the short immediately will result in a very short forced defrost cycle (the 10 minute timer will be sped through in 2 seconds)
4. When defrost begins, it will continue until the defrost thermostat opens or 10 minutes has elapsed.

NOTE: The T1 terminal on the defrost board powers the defrost timing function. This terminal must be energized before any defrost function will occur.

If defrost thermostat is stuck closed:

Whether the unit is in heating or cooling mode, it will run a defrost cycle for 10 minutes each time the compressor has been energized for the selected time interval. The board will terminate automatically after 10 minutes of defrost time regardless of defrost thermostat position.

If defrost thermostat is stuck open:

The unit will not defrost

NOTE: Unit will remain in defrost until defrost thermostat reopens at approximately 65°F coil temperature at liquid line or remainder of defrost cycle time.

5. Turn off power to outdoor unit and reconnect fan-motor lead to OF2 on control board after above forced-defrost cycle.

If unit will not defrost:

1. Perform the speedup function as described above to test the defrost function of the circuit board.
2. If the unit does not go into defrost after performing the speed up, check for 24 volts on the T1 terminal. This terminal powers the defrost circuit, and must be energized before any defrost function can occur. The T1 should be energized once the Y terminal is energized and the pressure switches are closed. Ensure the T1 wire is connected at the contactor, and that 24 volts is present on the T1 spade terminal.
3. If all voltages are present and unit will still not run defrost, remove thermostat pigtail harness from board and perform checks directly on input pins with jumper wires. The pigtail may have a bad connection or be mis-wired.

To fully troubleshoot defrost thermostat and control function (HK32EA001):

1. Turn thermostat to OFF. Shut off all power to outdoor unit.
2. Remove control box cover for access to electrical components and defrost control board.
3. Disconnect defrost thermostat leads from control board, and connect to ohmmeter. Thermostat leads are black, insulated wires connected to DFT and R terminals on control board. Resistance reading may be zero (indicating closed defrost thermostat), or Evolution (∞ for open thermostat) depending on outdoor temperature.
4. Jumper between DFT and R terminals on control board as shown in Fig. 9.
5. Disconnect outdoor fan motor lead from OF2. Tape lead to prevent grounding.
6. Turn on power to outdoor unit.
7. Restart unit in heating mode, allowing frost to accumulate on outdoor coil.
8. After a few minutes in heating mode, liquid line temperature at defrost thermostat should drop below closing set point of defrost thermostat of approximately 32°F. Check resistance across defrost thermostat leads using ohmmeter. Resistance of zero indicates defrost thermostat is closed and operating properly.
9. Short between the speed-up terminals using a thermostat screwdriver. This reduces the timing sequence to 1/256 of original time. (See Table 3.)

Table 3—Defrost Control Speed-Up Timing Sequence

PARAMETER	MINIMUM (MINUTES)	MAXIMUM (MINUTES)	SPEED-UP (NOMINAL)
30-minute cycle	27	33	7 sec
50-minute cycle	45	55	12 sec
90-minute cycle	81	99	21 sec
10-minute cycle	9	11	2 sec
5-minutes	4.5	5.5	1 sec

⚠ CAUTION

UNIT DAMAGE HAZARD

Failure to follow this caution may result in equipment damage or improper operation.

Exercise extreme caution when shorting speed-up pins. If pins are accidentally shorted to other terminals, damage to the control board will occur.

10. Unit is now operating in defrost mode. Check between C and W2 using voltmeter. Reading on voltmeter should indicate 24v. This step ensures defrost relay contacts have closed, energizing supplemental heat (W2) and reversing valve solenoid (O).
11. Unit should remain in defrost no longer than 10 minutes. Actual time in defrost depends on how quickly speed-up jumper is removed. If it takes 2 sec to remove speed-up jumper after unit has switched to defrost, the unit will switch back to heat mode.
12. After a few minutes, in defrost (cooling) operation, liquid line should be warm enough to have caused defrost thermostat contacts to open. Check resistance across defrost thermostat. Ohmmeter should read infinite resistance, indicating defrost thermostat has opened at approximately 65°F.
13. Shut off unit power and reconnect fan lead.

14. Remove jumper between DFT and R terminals. Reconnect defrost thermostat leads. Failure to remove jumper causes unit to switch to defrost every 30, 60, or 90 minutes and remain in defrost for full 10 minutes.
15. Replace control box cover. Restore power to unit.

If defrost thermostat does not check out following above items or incorrect calibration is suspected, check for defective thermostat as follows:

1. Follow items 1-5 above.
2. Route sensor or probe underneath coil (or other convenient location) using thermocouple temperature measuring device. Attach to liquid line near defrost thermostat. Insulate for more accurate reading.
3. Turn on power to outdoor unit.
4. Restart unit in heating.
5. Within a few minutes, liquid line temperature drops within a range causing defrost thermostat contacts to close. Temperature range is from 33°F to 27°F. Notice temperature at which ohmmeter reading goes from ∞ to zero ohms. Thermostat contacts close at this point.
6. Short between the speed-up terminals using a small slotted screwdriver.
7. Unit changes over to defrost within 21 sec (depending on timing cycle setting). Liquid line temperature rises to range where defrost thermostat contacts open. Temperature range is from 60°F to 70°F. Resistance goes from zero to ∞ when contacts are open.
8. If either opening or closing temperature does not fall within above ranges or thermostat sticks in 1 position, replace thermostat to ensure proper defrost operation.

NOTE: With timing cycle set at 90 minutes, unit initiates defrost within approximately 21 sec. When you hear the reversing valve changing position, remove screwdriver immediately. Otherwise, control will terminate normal 10-minute defrost cycle in approximately 2 sec.

HK32EA003 DEFROST CONTROL

The HK32EA003 defrost control is used in all 226A Preferred Series heat pumps with Puron refrigerant. Its features include selectable defrost intervals of 30, 60, 90, & 120 minutes, Quiet Shift, compressor time delay, deluxe defrost speed up capability. This section describes the sequence of operation and trouble shooting methods for this control.

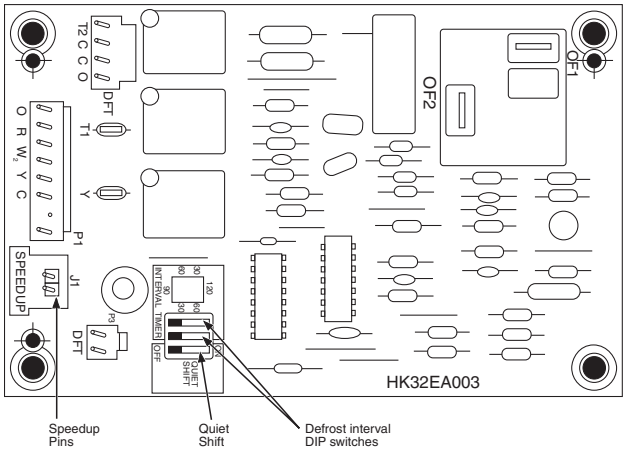

A05378

Fig. 10 – HK32EA003 Defrost Control

Quiet Shift (HK32EA003)

This control has the option of shutting down the compressor for 30 seconds going in and coming out of defrost. This is accomplished by turning DIP switch 3 to the ON position. Factory default is in the OFF position. Enabling this feature eliminates occasional noise complaints associated with switching into and out of defrost.

Five-Minute Compressor Delay (HK32EA003)

This control features a 5-minute time delay to protect the compressor from short cycling. The delay begins counting when the low voltage is interrupted, and at the end of heating or cooling cycle.

System function and Sequence of operation (HK32EA003)

On power-up (24 volts between R-C) the 5 minute cycle timer begins counting down. The compressor will not be energized until this timer is elapsed.

Cooling

On a call for cooling, thermostat makes R-O, R-Y, and R-G. Circuit R-O energizes reversing valve switching it to cooling position. Circuit R-Y sends low voltage through the safeties and energizes the T1 terminal on the circuit board. If the compressor has been off for 5 minutes, or power has not been cycled for 5 minutes, the OF2 relay and T2 terminal will energize. This will close the contactor, start the outdoor fan motor and compressor.

When the cycle is complete, R-Y is turned off and compressor and outdoor fan should stop. When using Bryant thermostats, the reversing valve remains energized in the cooling mode until the thermostat is switched to heat, or the mode it turned off. The 5-minute time guard begins counting. Compressor will not come on again until this time delay expires. In the event of a power interruption, the time guard will not allow another cycle for 5 minutes.

Heating

On a call for heating, thermostat makes R-Y, and R-G. Circuit R-Y sends low voltage through the safeties and energizes the T1 terminal on the circuit board. T1 energizes the defrost logic circuit. If the compressor has been off for 5 minutes, or power has not been cycled for 5 minutes, the OF2 relay and T2 terminal will energize. This will close the contactor, start the outdoor fan motor and compressor.

When the cycle is complete, R-Y is turned off and the compressor and outdoor fan should stop. The 5 minute time guard begins counting. Compressor will not come on again until this time delay expires. In the event of a power interruption, the time guard will not allow another cycle for 5 minutes.

Defrost Sequence

The defrost control is a time/temperature control that has field selectable settings of 30, 60, 90 and 120 minutes. These represent the amount of time that must pass after closure of the defrost thermostat before the defrost sequence begins.

The defrost thermostat senses coil temperature throughout the heating cycle. When the coil temperature reaches the defrost thermostat setting of approximately 32 degrees F, it will close, which energizes the DFT terminal and begins the defrost timing sequence. When the DTF has been energized for the selected time, the defrost cycle begins. If the defrost thermostat opens before the timer expires, the timing sequence is reset.

Defrost cycle is terminated when defrost thermostat opens or automatically after 10 minutes.

Deluxe Defrost Speedup

To initiate a force defrost, speedup pins (J1) must be shorted with a flat head screwdriver for 5 seconds and RELEASED. If the defrost thermostat is open, a short defrost cycle will be observed (actual length depends on Quiet Shift switch position). When Quiet Shift is off, only a short 30 second defrost cycle is observed. With Quiet Shift ON, the speed up sequence is one minute; 30 second compressor off period followed by 30 seconds of defrost with compressor operation. When returning to heating mode, the compressor will turn off for an additional 30 seconds and the fan for 40 seconds.

If the defrost thermostat is closed, a complete defrost cycle is initiated. If the Quiet Shift switch is turned on, the compressor will be turned off for two 30 second intervals as explained previously.

Troubleshooting (HK32EA003)

If outdoor unit will not run:

1. Does the Y input have 24 volts from thermostat? If not, check thermostat or wire. If yes proceed to #2
2. The Y spade terminal should have 24 volts if Y input is energized. This output goes through the pressure switches and back to the T1 input to energize the time delay and defrost timing circuit. If the contactor is not closed, the time delay may still be active. Defeat time delay by shorting speed up pins for 1 second. Be sure not to short more than 1 second.
3. Once time delay has elapsed voltage on T2 should energize contactor. Check voltage on contactor coil. If no voltage is present, check for opened pressure switch.
4. If voltage is present and contactor is open, contactor may be defective. Replace contactor
5. If contactor is closed and unit will still not run, check capacitor and compressor.

If unit will not go into defrost:

1. Perform speedup function as described above to test the defrost function of the circuit board.
2. If the unit will go into defrost with the speed up, but will not on its own, the defrost thermostat may not be functioning properly. Perform the full defrost thermostat and board troubleshooting the same as described for the HK32EA001 control. Other than the Quiet shift (if selected), and the speedup timing, the troubleshooting process is identical.
3. If unit still will not run defrost, remove thermostat pigtail harness from board and perform checks directly on input pins with jumper wires. The pigtail may have a bad connection or be mis-wired.

HK32EA008 DEFROST CONTROL

The HK32EA008 defrost control is used in all non-communicating heat pumps and has all the same functionality, speedups, and troubleshooting as the HK32EA003 except for the forced defrost timing when Quiet Shift-2 is enabled.

Quiet Shift-2 (non-communicating)

Quiet shift-2 is a field selectable defrost mode (factory set to OFF), which will reduce the occasional noise that could be heard at the start of defrost cycle and restarting of heating cycle. It is selected by placing DIP switch 3 on defrost board in the ON position.

When Quiet Shift-2 switch is placed in ON position, and defrost is initiated, the following sequence of operation will occur: The compressor will be de-energized for approximately 1 minute, then the reversing valve will be energized. A few seconds later, the compressor will be re-energized and the normal defrost cycle starts. Once defrost termination conditions have been met, the following sequence will occur: The compressor will be de-energized for approximately 1 minute, then the reversing valve will be de-energized. A few seconds later, the compressor will be re-energized and the normal heating cycle starts.

OUTDOOR FAN MOTORS

ECM Fan Motor

Some single stage outdoor units will be equipped with ECM fan motors. For suspected ECM motor electrical failures, first check for loose or faulty electrical connections. ECM motors are not wired to the capacitor. A reference for the wires is listed in the table below:

Table 4—ECM Fan Motor Wires

TERMINAL	DESCRIPTION	COLOR
1/4” Non insulated Q.C.	Speed, Common (low Voltage)	BRN/YEL
1/4” Insulated Q.C.	AC line (high voltage)	YEL
1/4” Non insulated Q.C.	Speed (low voltage)	BLU/YEL
#8 Non insulated ring	Ground	GRN/YEL
1/4” Insulated Q.C.	AC line (high voltage)	BLK

The low voltage wires should see 24VAC when the contactor is engaged. The high voltage wires should see 230VAC as long as 230VAC is being supplied to the field side of the contactor. The ECM motor will not operate unless both 24VAC and 230VAC are being supplied. Refer to the wiring diagram to determine where each wire should be connected to the contactor. If connections are secure, the motor is wired properly, proper voltages are present, and the ECM motor is still not operational, replace the ECM motor.

If utilizing Motor Master or low ambient cooling kits, the ECM motor will not function properly. The ECM motor will need to be replaced with a PSC fan motor and fan blade specified in the accessory lists for the unit and wired per the wiring diagram.

PSC Fan Motor

The fan motor rotates the fan blade that draws air through the outdoor coil to exchange heat between the refrigerant and the air. Motors are totally enclosed to increase reliability. This eliminates the need for a rain shield. For the correct position of fan blade assembly, the fan hub should be flush with the motor shaft. Replacement motors and blades may vary slightly.

⚠ WARNING

ELECTRICAL SHOCK HAZARD

Failure to follow this warning could result in personal injury or death.

Turn off all power before servicing or replacing fan motor. Be sure unit main power switch is turned off.

The bearings are permanently lubricated, therefore, no oil ports are provided.

For suspected electrical failures, check for loose or faulty electrical connections, or defective fan motor capacitor. Fan motor is equipped with thermal overload device in motor windings which may open under adverse operating conditions. Allow time for motor to cool so device can reset. Further checking of motor can be done with an ohmmeter. Set scale on R X 1 position, and check for continuity between 3 leads. Replace motors that show an open circuit in any of the windings. Place 1 lead of ohmmeter on each motor lead. At same time, place other ohmmeter lead on motor case (ground). Replace any motor that shows resistance to ground, arcing, burning, or overheating.

Compressor Plug

The compressor electrical plug provides a quick-tight connection to compressor terminals. The plug completely covers the compressor terminals and the mating female terminals are completely encapsulated in plug. Therefore, terminals are isolated from any moisture so corrosion and resultant pitted or discolored terminals are reduced. The plug is oriented to relief slot in terminal box so cover cannot be secured if wires are not positioned in slot, assuring correct electrical connection at the compressor. The plug can be removed by simultaneously pulling while "rocking" plug. However, these plugs can be used only on specific compressors. The configuration around the fusite terminals is outlined on the terminal covers. The slot through which wires of plug are routed is oriented on the bottom and slightly to the left. The correct plug can be connected easily to compressor terminals and plug wires can easily be routed through slot terminal cover.

It is strongly recommended to replace the compressor plug should a compressor fail due to a suspected electrical failure. At a minimum, inspect plug for proper connection and good condition on any compressor replacement.

Low-Voltage Terminals

The low-voltage terminal designations, and their description and function, are used on all split-system condensers.

W—Energizes first-stage supplemental heat through defrost relay (wht).

R—Energizes 24-v power from transformer (red).

Y—Energizes contactor for first-stage cooling or first-stage heating for heat pumps (yel).

O—Energizes reversing valve on heat pumps (orn).

C—Common side of transformer (blk).

COPELAND SCROLL COMPRESSOR

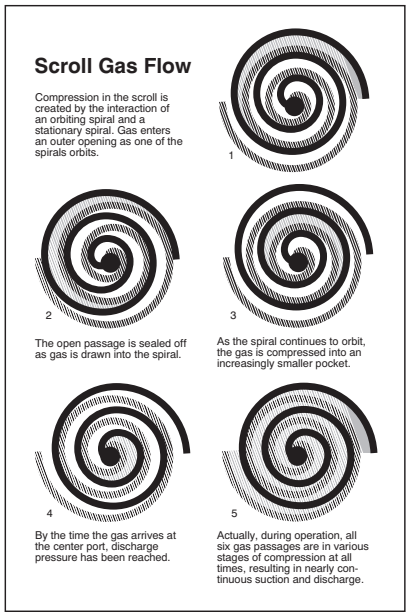

A90198

Fig. 11 – Scroll Compressor Refrigerant Flow

The compressors used in these products are specifically designed to operate with designated refrigerant and cannot be interchanged. The compressor is an electrical (as well as mechanical) device. Exercise extreme caution when working near compressors. Power should be shut off, if possible, for most troubleshooting techniques. Refrigerants present additional safety hazards.

⚠ CAUTION

PERSONAL INJURY HAZARD

Failure to follow this caution may result in personal injury.

Wear safety glasses, protective clothing, and gloves when handling refrigerant.

The scroll compressor pumps refrigerant through the system by the interaction of a stationary and an orbiting scroll. (See Fig. 11.) The scroll compressor has no dynamic suction or discharge valves, and it is more tolerant of stresses caused by debris, liquid slugging, and flooded starts. The compressor is equipped with an internal pressure relief port. The pressure relief port is a safety device, designed to protect against extreme high pressure. The relief port has an operating range between 550 to 625 psi differential pressure for Puron® and 350 to 450 psi differential pressure for R-22. Scrolls have a variety of shut down solutions, depending on model, to prevent backward rotation and eliminate the need for cycle protection.

LG SCROLL COMPRESSOR

The compressors used in these products are specifically designed to operate with designated refrigerants and cannot be interchanged.

LG produced scroll compressors are designed to operate and function as the typical orbiting scroll on a fixed scroll design. Refrigerant flow and compression is basically the same.

Characteristics of the LG Scroll Compressor:

Internal Motor Overload Protection (OLP): This is an inherent protection system sensing both motor winding temperature and motor current. This is designed to open the common wire on single phase units and stop the motor operation if motor high temperature or over current conditions exist. Trip of the OLP opens the common line.

Vacuum protection device: If the suction side of the compressor is blocked or limited, an extremely low vacuum situation is formed by the optimum efficiency of the scrolls. The high vacuum pressure causes the arc at the internal power terminal and cause tripping of the internal overload or breaker or damage to the compressor. This compressor is equipped with internal protection that opens if this high vacuum condition exists and bypasses high pressure gas to the low pressure and the internal overload may trip. In the case of refrigerant pump down, the unit can operate with pump down but this protection may not allow the refrigerant to be pumped down completely.

Internal Pressure Relief (IPR): The internal pressure relief is located between the high and low pressure of the compressor and is designed to open when the difference of the suction and discharge pressure is (55-550 psid (35.1-38.7 kg/cm2). When the IPR valve opens, the high temperature gas bypasses into the motor area and will trip the motor OLP.

Quiet Shut Down Device: The LG scroll has a shut down device to efficiently minimize the shut down sound. The reversing sound is minimized by a check valve located in the discharge port of the scroll sets. This slows the equalization of the high side to low side upon shut down to prevent the scrolls from operating backwards.

Discharge Temperature Protection: The compressor discharge temperature is monitored by a temperature sensor mounted on the top cap of the compressor. Wire diagrams may refer to this as a discharge temperature switch (DTS). This is to protect against excessively high scroll temperatures due to loss of charge or operating outside the compressor envelope. This temperature sensor opens to stop the compressor if temperatures exceed 239-257°F (115-125°C) and resets at 151-187°F (66-86°C). The DTS will break the Y signal in the 24 volt circuit if it trips open.

Test sensor wires for continuity, open above 239-257F°F (115-125°C) and resets at 151-187°F (66-86°C).

If replacement is deemed necessary, perform the following to replace sensor:

1. Locate top cap and discharge temperature sensor

A12342

2. Carefully remove sensor cover

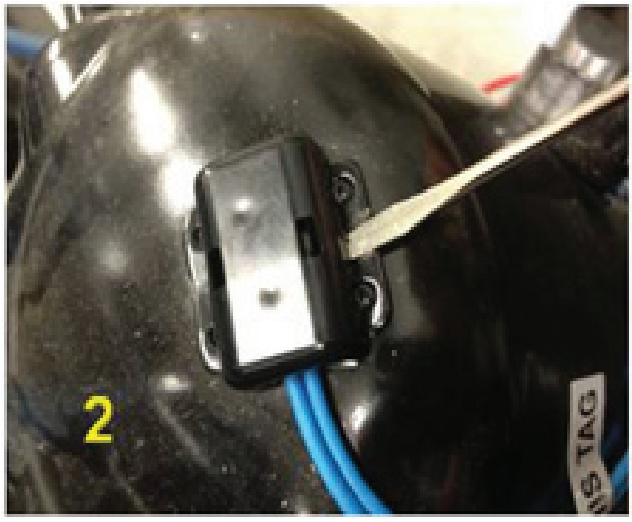

A12343

3. Expose the sensor holder

A12344

4. Slide out the sensor, slide in replacement and reinstall the cover

A12345

COMPRESSOR TROUBLESHOOTING

Compressor Failures

Compressor failures are classified in 2 broad failure categories; mechanical and electrical. Both types are discussed below.

Mechanical Failures

A compressor is a mechanical pump driven by an electric motor contained in a welded or hermetic shell. In a mechanical failure, motor or electrical circuit appears normal, but compressor does not function normally.

⚠ WARNING

ELECTRICAL SHOCK HAZARD

Failure to follow this warning could result in personal injury or death.

Do not supply power to unit with compressor terminal box cover removed.

⚠ WARNING

ELECTRICAL SHOCK HAZARD

Failure to follow this warning could result in personal injury or death.

Exercise extreme caution when reading compressor currents when high-voltage power is on. Correct any of the problems described below before installing and running a replacement compressor.

Locked Rotor

In this type of failure, compressor motor and all starting components are normal. When compressor attempts to start, it draws locked rotor current and cycles off on internal protection. Locked rotor current is measured by applying a clamp-on ammeter around common (blk) lead of compressor. Current drawn when it attempts to start is then measured. Locked rotor amp (LRA) value is stamped on compressor nameplate.

If compressor draws locked rotor amps and all other external sources of problems have been eliminated, compressor must be replaced. Because compressor is a sealed unit, it is impossible to determine exact mechanical failure. However, complete system should be checked for abnormalities such as incorrect refrigerant charge, restrictions, insufficient airflow across indoor or outdoor coil, etc., which could be contributing to the failure.

Runs, Does Not Pump

In this type of failure, compressor motor runs and turns compressor, but compressor does not pump refrigerant. A clamp-on ampmeter on common leg shows a very low current draw, much lower than rated load amp (RLA) value stamped on compressor nameplate. Because no refrigerant is being pumped, there is no return gas to cool compressor motor. It eventually overheats and shuts off on its internal protection.

Noisy Compressor

Noise may be caused by a variety of internal and external factors. Careful attention to the "type" of noise may help identify the source. The following are some examples of abnormal conditions that may create objectionable noise:

1. A gurgling sound may indicate a liquid refrigerant floodback during operation. This could be confirmed if there is no compressor superheat. A compressor superheat of "0" degrees would indicate liquid refrigerant returning to the compressor. Most common reasons for floodback are: loss of evaporator blower, dirty coils, and improper airflow.
2. A rattling noise may indicate loose hardware. Inspect all unit hardware including the compressor grommets.
3. A straining (hard start) or vibration occurring at start up but clears quickly after could indicate an off cycle refrigerant migration issue. Refrigerant migration can occur when a compressor is off and refrigerant vapor transfers from other areas of the system, settles into the compressor as it is attracted to the oil, and then condenses into the oil. Upon start up, the compressor draws suction from within itself first and lowers the boiling point of the refrigerant that is entrained in the oil. This can cause the liquid refrigerant and oil to boil into the compression area or liquid refrigerant to wipe off oil films that are critical for proper lubrication. Migration is worsened by greater temperature differentials and/or extra refrigerant in the system. Prevention of migration can be reduced by various options but some of the more common remedies is to verify proper charge and add a crankcase heater where this situation is suspected.
4. Operational vibration could indicate a charge issue. Verify charge and ensure proper piping and structural penetration insulation. Tubing that is too rigid to building rafters without proper insulation could transfer noise throughout the structure. On some occasions a sound dampener or mass weight (RCD part no. 328209-751) placed on the vibrating tubing has been known to reduce this noise. Utilizing compressor split post grommets (see Fig. 12) may also reduce this vibration if piping cannot be remedied.
5. An operational high pitch frequency or "waa waa" sound that appears to resonate through the suction line could indicate a need to add more flex or muffling in the lines. This has been occasional in scroll compressor applications and is usually remedied by adding a field-fabricated suction line loop (see Fig. 13). Reciprocating compressors may have a noticeable discharge pulsation that could be remedied with a field installed discharge muffler. Recommend loop by continuous tubing with no more than 12 inches vertical and 6 inch horizontal loop.
6. An internal "thunking", "thumping", "grinding" or "rattling" noise could indicate compressor internal failures and may be verified by comparing the compressor amperage to what the compressor should be drawing according to a manufacturer's performance data.
7. A whistling or squealing noise during operation may indicate a partial blockage of the refrigerant charge.
8. A whistle on shut down could indicate a partial leak path as refrigerant is equalizing from high to low side. On occasion, an in-line discharge check valve has prevented this sound.

9. If a compressor hums but won't start it could indicate either a voltage or amperage issue. Verify adequate voltage and operational start components if installed. If it is drawing excessive amperage and voltage doesn't appear to be the problem it may be assumed a locked condition. Ensure refrigerant has had ample time to equalize and boil out of the compressor before condemning.
10. When a heat pump switches into and out of defrost, a "swooshing" noise is expected due to the rapid pressure change within the system. However customers sometimes complain that the noise is excessive, or it is sometimes accompanied by a "groaning, or howling" noise. When receiving these complaints, Quiet Shift-2 (if available) may improve the noise, but will probably not eliminate it totally. Check that the defrost thermostat or thermistor is operating properly. Insulating the defrost sensing device may also help. If the howling or groaning noise is intermittent, replacing the reversing valve may or may not help.
11. Rattling that occurs during a shift into or out of defrost on a heat pump could indicate a pressure differential issue. This is usually a brief occurrence (under 60 seconds) and can be remedied by incorporating Quiet Shift-2, if available. This is a device that shuts down the compressor during the defrost shift for approximately 1 minute allowing the pressures to equalize. It is enabled by either a dip switch setting on the defrost board, or in the User Interface on communicating systems. Verify proper system charge as well.

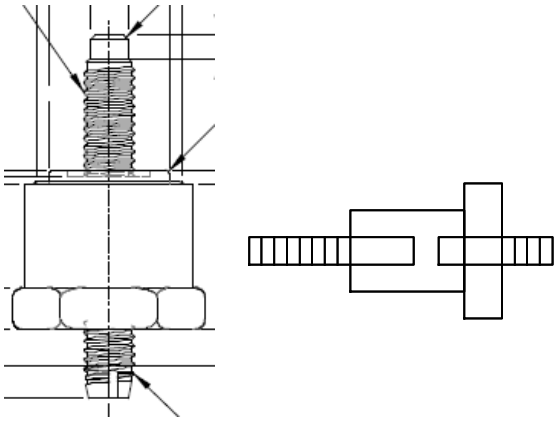

A07124

Fig. 12 – Split Post Grommet part number: KA75UG100

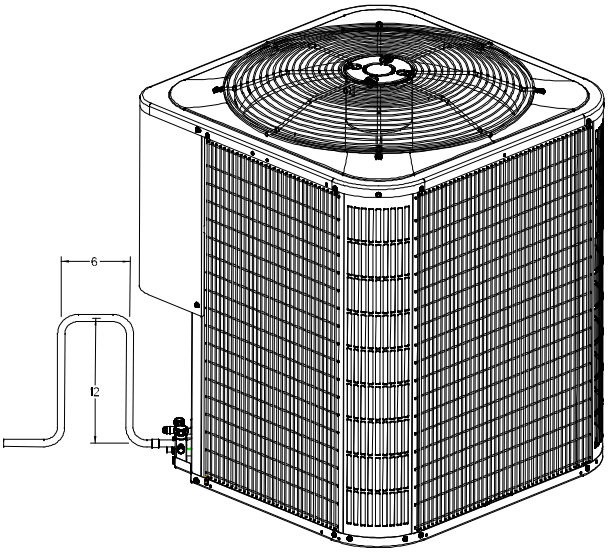

Note: Long radius elbows recommended

A07123

Fig. 13 – Suction Line Loop

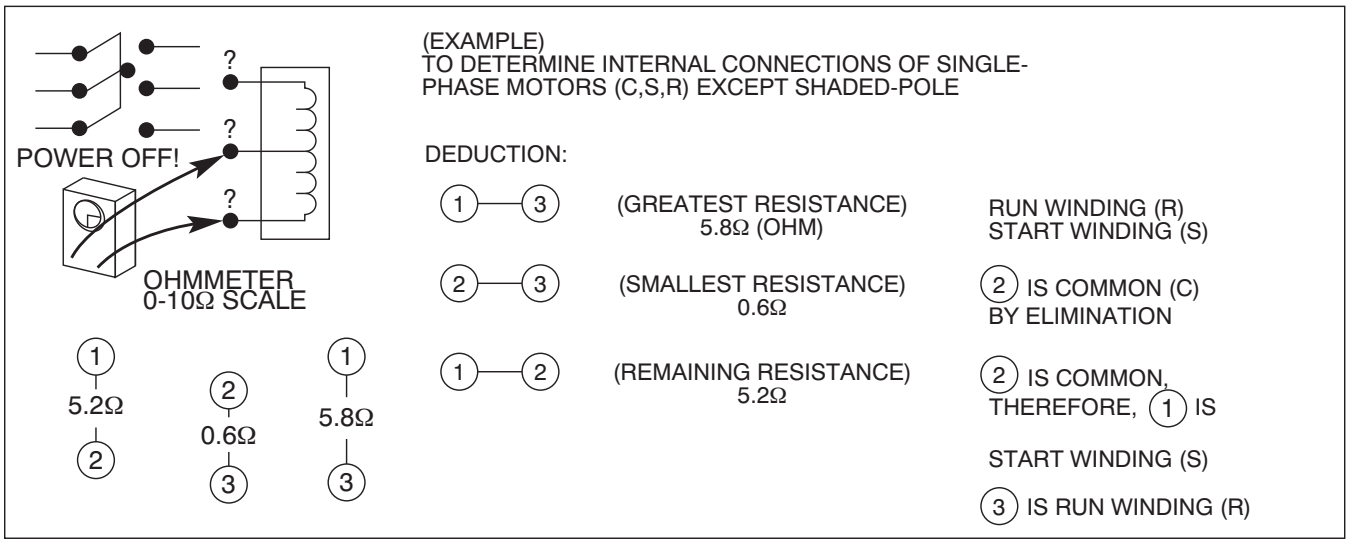

A88344

Fig. 14 – Identifying Compressor Terminals

Electrical Failures

The compressor mechanical pump is driven by an electric motor within its hermetic shell. In electrical failures, compressor does not run although external electrical and mechanical systems appear normal. Compressor must be checked electrically for abnormalities.

Before troubleshooting compressor motor, review this description of compressor motor terminal identification.

Single-Phase Motors

To identify terminals C, S, and R:

1. Turn off all unit power.
2. Discharge run and start capacitors to prevent shock.
3. Remove all wires from motor terminals.
4. Read resistance between all pairs of terminals using an ohmmeter on 0-10 ohm scale.
5. Determine 2 terminals that provide greatest resistance reading.

Through elimination, remaining terminal must be common (C). Greatest resistance between common (C) and another terminal indicates the start winding because it has more turns. This terminal is the start (S). The remaining terminal will be run winding (R).

NOTE: If compressor is hot, allow time to cool and internal line break to reset. There is an internal line break protector which must be closed.

All compressors are equipped with internal motor protection. If motor becomes hot for any reason, protector opens. Compressor should always be allowed to cool and protector to close before troubleshooting. Always turn off all power to unit and disconnect leads at compressor terminals before taking readings.

Most common motor failures are due to either an open, grounded, or short circuit. When a compressor fails to start or run, 3 tests can help determine the problem. First, all possible external causes should be eliminated, such as overloads, improper voltage, pressure equalization, defective capacitor(s), relays, wiring, etc. Compressor has internal line break overload, so be certain it is closed.

Open Circuit

⚠ WARNING

UNIT PERSONAL INJURY HAZARD

Failure to follow this warning could result in personal injury.

Use caution when working near compressor terminals. Damaged terminals have the potential to cause personal injury.

Never put face or body directly in line with terminals.

To determine if any winding has a break in the internal wires and current is unable to pass through, follow these steps:

1. Be sure all power is off.
2. Discharge all capacitors.
3. Remove wires from terminals C, S, and R.
4. Check resistance from C-R, C-S, and R-S using an ohmmeter on 0-1000 ohm scale.

Because winding resistances are usually less than 10 ohms, each reading appears to be approximately 0 ohm. If resistance remains at 1000 ohms, an open or break exists and compressor should be replaced.

⚠ CAUTION

UNIT DAMAGE HAZARD

Failure to follow this caution may result in equipment damage or improper operation.

Be sure internal line break overload is not temporarily open.

Ground Circuit

To determine if a wire has broken or come in direct contact with shell, causing a direct short to ground, follow these steps:

1. Allow crankcase heaters to remain on for several hours before checking motor to ensure windings are not saturated with refrigerant.
2. Using an ohmmeter on R X 10,000 ohm scale or megohmmeter (follow manufacturer's instructions).
3. Be sure all power is off.
4. Discharge all capacitors.
5. Remove wires from terminals C, S, and R.
6. Place one meter probe on ground or on compressor shell. Make a good metal-to-metal contact. Place other probe on terminals C, S, and R in sequence.
7. Note meter scale.
8. If reading of 0 or low resistance is obtained, motor is grounded. Replace compressor.

Compressor resistance to ground should not be less than 1000 ohms per volt of operating voltage.

Example:

230 volts X 1000 ohms/volt = 230,000 ohms minimum.

Short Circuit

To determine if any wires within windings have broken through their insulation and made contact with other wires, thereby shorting all or part of the winding(s), be sure the following conditions are met.

1. Correct motor winding resistances must be known before testing, either from previous readings or from manufacturer's specifications.
2. Temperature of windings must be as specified, usually about 70°F.
3. Resistance measuring instrument must have an accuracy within ± 5-10 percent. This requires an accurate ohmmeter such as a Wheatstone bridge or null balance-type instrument.
4. Motor must be dry or free from direct contact with liquid refrigerant.

Make This Critical Test

(Not advisable unless above conditions are met)

1. Be sure all power is off.
2. Discharge all capacitors.
3. Remove wires from terminals C, S, and R.
4. Place instrument probes together and determine probe and lead wire resistance.
5. Check resistance readings from C-R, C-S, and R-S.
6. Subtract instrument probe and lead resistance from each reading.

If any reading is within ±20 percent of known resistance, motor is probably normal. Usually a considerable difference in reading is noted if a turn-to-turn short is present.

REFRIGERATION SYSTEM

Refrigerant

⚠ WARNING

UNIT OPERATION AND SAFETY HAZARD

Failure to follow this warning could result in personal injury or equipment damage.

Puron® refrigerant which has higher pressures than R-22 and other refrigerants. No other refrigerant may be used in this system. Gauge set, hoses, and recovery system must be designed to handle Puron®. If you are unsure consult the equipment manufacturer.

⚠ CAUTION

UNIT DAMAGE HAZARD

Failure to follow this caution may result in equipment damage or improper operation.

The compressor in a Puron® system uses a polyol ester (POE) oil. This oil is extremely hygroscopic, meaning it absorbs water readily. POE oils can absorb 15 times as much water as other oils designed for HCFC and CFC refrigerants. Take all necessary precautions to avoid exposure of the oil to the atmosphere.

In an air conditioning and heat pump system, refrigerant transfers heat from one replace to another. The condenser is the outdoor coil in the cooling mode and the evaporator is the indoor coil.

In a heat pump, the condenser is the indoor coil in the heating mode and the evaporator is the outdoor coil.

In the typical air conditioning mode, compressed hot gas leaves the compressor and enters the condensing coil. As gas passes through the condenser coil, it rejects heat and condenses into liquid. The liquid leaves condensing unit through liquid line and enters metering device at evaporator coil. As it passes through metering device, it becomes a gas-liquid mixture. As it passes through indoor coil, it absorbs heat and the refrigerant moves to the compressor and is again compressed to hot gas, and cycle repeats.

Servicing Systems on Roofs With Synthetic Materials

POE (polyol ester) compressor lubricants are known to cause long term damage to some synthetic roofing materials. Exposure, even if immediately cleaned up, may cause embrittlement (leading to cracking) to occur in one year or more. When performing any service which may risk exposure of compressor oil to the roof, take appropriate precautions to protect roofing. Procedures which risk oil leakage include but are not limited to compressor replacement, repairing refrigerants leaks, replacing refrigerant components such as filter drier, pressure switch, metering device, coil, accumulator, or reversing valve.

Synthetic Roof Precautionary Procedure

1. Cover extended roof working area with an impermeable polyethylene (plastic) drop cloth or tarp. Cover an approximate 10 x 10 ft area.
2. Cover area in front of the unit service panel with a terry cloth shop towel to absorb lubricant spills and prevent run-offs, and protect drop cloth from tears caused by tools or components.
3. Place terry cloth shop towel inside unit immediately under component(s) to be serviced and prevent lubricant run-offs through the louvered openings in the base pan.
4. Perform required service.
5. Remove and dispose of any oil contaminated material per local codes.

Brazing

This section on brazing is not intended to teach a technician how to braze. There are books and classes which teach and refine brazing techniques. The basic points below are listed only as a reminder.

Definition: The joining and sealing of metals using a nonferrous metal having a melting point over 800°F/426.6°C.

Flux: A cleaning solution applied to tubing or wire before it is brazed. Flux improves the strength of the brazed connection.

When brazing is required in the refrigeration system, certain basics should be remembered. The following are a few of the basic rules.

1. Clean joints make the best joints. To clean:
   - Remove all oxidation from surfaces to a shiny finish before brazing.
   - Remove all flux residue with brush and water while material is still hot.
2. Silver brazing alloy is used on copper-to-brass, copper-to-steel, or copper-to-copper. Flux is required when using silver brazing alloy. Do not use low temperature solder.
3. Fluxes should be used carefully. Avoid excessive application and do not allow fluxes to enter into the system.
4. Brazing temperature of copper is proper when it is heated to a minimum temperature of 800°F and it is a dull red color in appearance.

Aluminum Brazing

This field repair procedure is intended for aluminum coil product group that have acquired mechanical damage. This procedure is limited to repairing self-tapping screw holes and punctures, not to exceed 0.182” along its largest axis if non circular, and 0.182” diameter if circular.

Coil replacement is needed if at least one of the following is present:

- Brazing kit p/n 337748-751
- Corrosion cracks and burst cracks
- A singular tube with more than 2 holes
- Holes that exceed .182” largest axis if non circular and .182” dia. If circular.

The key to brazing aluminum is watching the flame change in color. Any fuel gas/oxygen flame in the neutral state will produce a flame that is a shade of blue. As the aluminum heats up to temperature, you will see the flame change in color to red/orange.

The change in color indicates the base metal is at temperature ready for braze material. Continuing to apply heat will not change the color and will melt the base metal.

The braze alloys should not have direct contact with the flame. In cored wire filler metals, you will notice that the filler metal will melt away exposing the flux. The flux change in state is from white liquid, to dry white, to clear liquid. The change in state of flux coincides with the flame change in color. The addition of flux will minimize the flame change in color. The alloy is ready to apply when the flux is in the clear state.

Most aluminum alloys melt at 1200°F, and the braze materials melt between 905°F and 1080°F. The zinc alloys (ZA-1) melt at a lower temperature while alloys which have more aluminum content melt at a higher temperature.

Materials:

1. 78/22 braze alloy Channel Flux ZA-1, Harris AlGroove900 cored wire
2. Flux CX-60 Omni / Lucas product
3. Stainless steel wire brushes small handle / rotary brush
4. Turbo-Torch equipment

Aluminum Brazing Instructions:

1. Clean area to be brazed
   a. Joint must be free of oil, grease, rust, corrosion, and refrigerant.
2. Wire brush to remove oxides from area
3. Flux area if required with the CX-60 flux. Cored wire alloys will not need fluxing.
   a. Additional flux with cored filler will aid in dirty conditions
4. Depending on thickness of material, select an appropriate torch tip size.
   a. Turbo torch standard nozzles work well for aluminum repair
      NOTE: It is important to size the torch tip to the thickness of material. Example: too large a torch tip will melt the aluminum base metal before you are able to repair it.
5. Heat area until flux turns clear or you see flame change in color.
6. Continue to heat the joint and test by wiping the braze rod across the joint.
7. Once the alloy melts on the parent metal add alloy to repair the area. **Maintain joint temperature** until repair is complete. **Do not over heat. (withdraw torch as required)**
8. It is best to repair the area the first time. Reheating can cause failure to repair the area.
9. If reheating is necessary, let joint cool, wire brush, reapply flux. Reheat joint so flux melts and reapply braze material.

Service Valves and Pumpdown

⚠ WARNING

PERSONAL INJURY AND UNIT DAMAGE HAZARD

Failure to follow this warning could result in personal injury or equipment damage.

Never attempt to make repairs to existing service valves. Unit operates under high pressure. Damaged seats and o-rings should not be replaced. Replacement of entire service valve is required. Service valve must be replaced by properly trained service technician.

Service valves provide a means for holding original factory charge in outdoor unit prior to hookup to indoor coil. They also contain gauge ports for measuring system pressures and provide shutoff convenience for certain types of repairs. (See Fig. 15.)

Front-seating service valves are used in outdoor residential equipment. This valve has a service port that contains a Schrader fitting. The service port is always pressurized after the valve is moved off the front-seat position.

The service valves used in the outdoor units come from the factory front-seated. This means that the refrigerant charge is isolated from the line-set connection ports. All heat pumps are shipped with an adapter stub tube. This tube must be installed on the liquid service valve. After connecting the stub tube to the liquid service valve of a heat pump, the valves are ready for brazing. The interconnecting tubing (line set) can be brazed to the service valves using industry accepted methods and materials. Consult local codes.

Before brazing the line set to the valves, the belled ends of the sweat connections on the service valves must be cleaned so that no brass plating remains on either the inside or outside of the bell joint. To prevent damage to the valve and/or cap "O" ring, use a wet cloth or other acceptable heat-sinking material on the valve before brazing. To prevent damage to the unit, use a metal barrier between brazing area and unit.

After the brazing operation and the refrigerant tubing and evaporator coil have been evacuated, the valve stem can be turned counterclockwise until back-seats, which releases refrigerant into tubing and evaporator coil. The system can now be operated.

Back-seating service valves must be back-seated (turned counterclockwise until seated) before the service-port caps can be removed and hoses of gauge manifold connected. In this position, refrigerant has access from and through outdoor and indoor unit.

The service valve-stem cap is tightened to 20 ± 2 ft/lb torque and the service-port caps to 9 ± 2 ft/lb torque. The seating surface of the valve stem has a knife-set edge against which the caps are tightened to attain a metal-to-metal seal. If accessory pressure switches are used, the service valve must be cracked. Then, the knife-set stem cap becomes the primary seal.

The service valve cannot be field repaired; therefore, only a complete valve or valve stem and service-port caps are available for replacement.

If the service valve is to be replaced, a metal barrier must be inserted between the valve and the unit to prevent damaging the unit exterior from the heat of the brazing operations.

⚠ CAUTION

PERSONAL INJURY HAZARD

Failure to follow this caution may result in personal injury.

Wear safety glasses, protective clothing, and gloves when handling refrigerant.

Pumpdown Procedure

Service valves provide a convenient shutoff valve useful for certain refrigeration-system repairs. System may be pumped down to make repairs on low side without losing complete refrigerant charge.

1. Attach pressure gauge to suction service-valve gauge port.
2. Front seat liquid-line valve.
3. Start unit in cooling mode. Run until suction pressure reaches 5 psig (35kPa). Do not allow compressor to pump to a vacuum.
4. Shut unit off. Front seat suction valve.

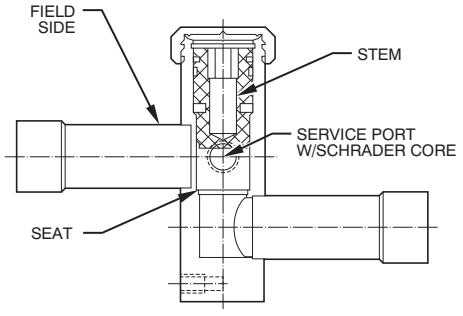

Fig. 15 – Suction Service Valve (Front Seating) Used in Legacy and Preferred ACs and HPs

NOTE: All outdoor unit coils will hold only factory-supplied amount of refrigerant. Excess refrigerant, such as in long-line applications, may cause unit to relieve pressure through internal pressure-relief valve (indicated by sudden rise of suction pressure) before suction pressure reaches 5 psig (35kPa). If this occurs, shut unit off immediately, front seat suction valve, and recover remaining pressure.

Heating Piston (AccuRater®) - Heat Pumps Only

In this product line, AccuRater pistons are used to meter refrigerant for heat pump heating mode only. All indoor coils are supplied with a bi-flow TXV for metering in the cooling mode. AccuRater® piston has a refrigerant metering hole through it. The piston seats against the meters refrigerant in to the outdoor coil in heating and allows refrigerant to flow around it in cooling mode.

There are 2 types of liquid line connections used. Flare connections are used in R-22 systems.

1. Shut off power to unit.
2. Pump unit down using pumpdown procedure described in this service manual.
3. Loosen nut and remove liquid line flare connection from AccuRater®.
4. Pull retainer out of body, being careful not to scratch flare sealing surface. If retainer does not pull out easily, carefully use locking pliers to remove it.
5. Slide piston and piston ring out by inserting a small soft wire with small kinks through metering hole. Do not damage metering hole, sealing surface around piston cones, or fluted portion of piston.
6. Clean piston refrigerant metering hole.
7. Install a new retainer O-ring, retainer assembly, or Teflon washer before reassembling AccuRater®.

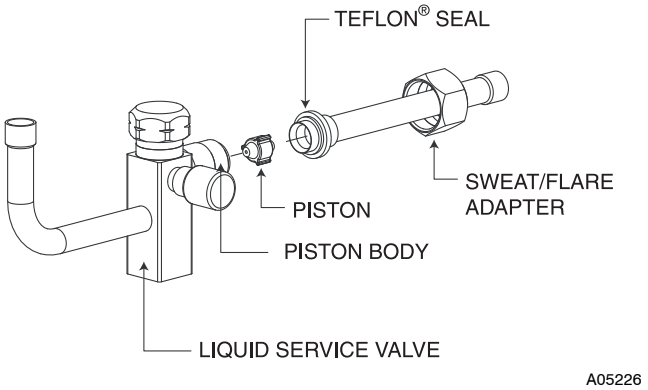

Fig. 16 – Front Seating Service Valve with Chatleff Connection Used in Legacy Line and 4-Sided Preferred and Evolution Puron Heat Pumps.

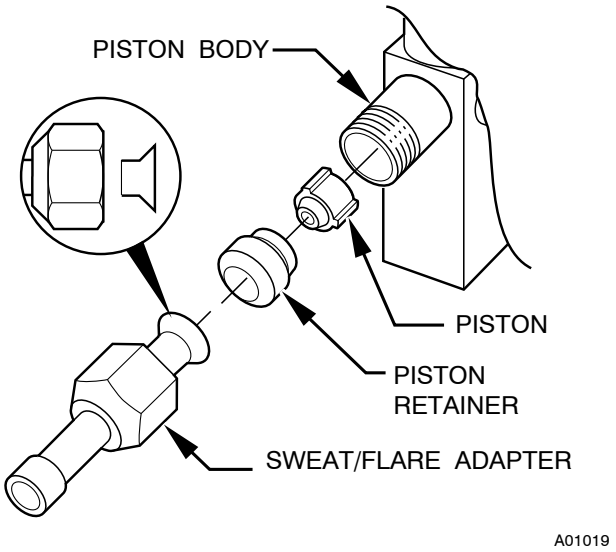

Fig. 17 – AccuRater® Components (used in R-22 Heat Pumps)

Reversing Valve

In heat pumps, changeover between heating and cooling modes is accomplished with a valve that reverses flow of refrigerant in system. This reversing valve device is easy to troubleshoot and replace. The reversing valve solenoid can be checked with power off with an ohmmeter. Check for continuity and shorting to ground. With control circuit (24v) power on, check for correct voltage at solenoid coil. Check for overheated solenoid.

With unit operating, other items can be checked, such as frost or condensate water on refrigerant lines.

The sound made by a reversing valve as it begins or ends defrost is a "whooshing" sound, as the valve reverses and pressures in system equalize. An experienced service technician detects this sound and uses it as a valuable troubleshooting tool.

Using a remote measuring device, check inlet and outlet line temperatures. **DO NOT** touch lines. If reversing valve is operating normally, inlet and outlet temperatures on appropriate lines should be close to each other. Any difference would be due to heat loss or gain across valve body. Temperatures are best checked with a remote reading electronic-type thermometer with multiple probes. Route thermocouple leads to inside of coil area through service valve mounting plate area underneath coil. Fig. 18 and Fig. 19 show test points (TP) on reversing valve for recording temperatures. Insulate points for more accurate reading.

If valve is defective:

1. Shut off all power to unit and remove charge from system.
2. Remove solenoid coil from valve body. Remove valve by cutting it from system with tubing cutter. Repair person should cut in such a way that stubs can be easily re-brazed back into system. Do not use hacksaw. This introduces chips into system that cause failure. After defective valve is removed, wrap it in wet rag and carefully unbraze stubs. Save stubs for future use. Because defective valve is not overheated, it can be analyzed for cause of failure when it is returned.
3. Braze new valve onto used stubs. Keep stubs oriented correctly. Scratch corresponding matching marks on old valve and stubs and on new valve body to aid in lining up new valve properly. When brazing stubs into valve, protect valve body with wet rag to prevent overheating.
4. Use slip couplings to install new valve with stubs back into system. Even if stubs are long, wrap valve with a wet rag to prevent overheating.
5. After valve is brazed in, check for leaks. Evacuate and charge system. Operate system in both modes several times to be sure valve functions properly.

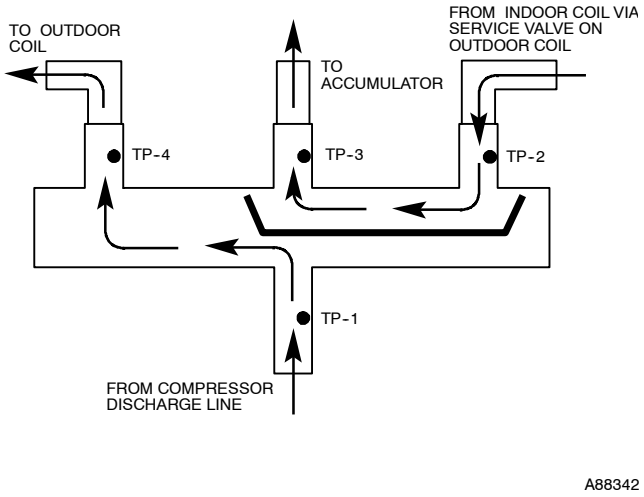

Fig. 18 – Reversing Valve (Cooling Mode or Defrost Mode, Solenoid Energized)

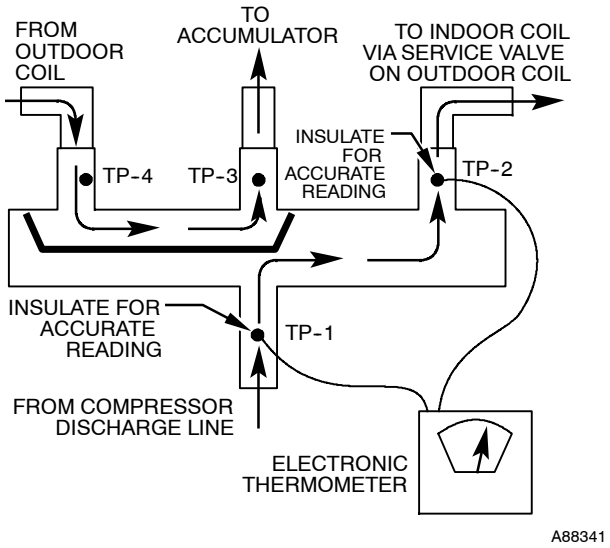

Fig. 19 – Reversing Valve (Heating Mode, Solenoid De-Energized)

Liquid Line Filter Drier

Filter driers are specifically designed for R-22 or Puron® refrigerant. Only operate with the appropriate drier using factory authorized components.

It is recommended that the liquid line drier be installed at the indoor unit. Placing the drier near the TXV allows additional protection to the TXV as the liquid line drier also acts as a strainer.

Install Liquid-line Filter Drier Indoor - AC

⚠ CAUTION

UNIT DAMAGE HAZARD

Failure to follow this caution may result in equipment damage or improper operation.

To avoid performance loss and compressor failure, installation of filter drier in liquid line is required.

⚠ CAUTION

UNIT DAMAGE HAZARD

Failure to follow this caution may result in equipment damage or improper operation.

To avoid filter drier damage while brazing, filter drier must be wrapped in a heat-sinking material such as a wet cloth.

Refer to Fig. 20 and install filter drier as follows:

1. Braze 5-in. liquid tube to the indoor coil.
2. Wrap filter drier with damp cloth.
3. Braze filter drier to above 5" liquid tube. Flow arrow must point towards indoor coil.
4. Connect and braze liquid refrigerant tube to the filter drier.

Install Liquid-line Filter Drier Indoor - HP

Refer to Fig. 21 and install filter drier as follows:

1. Braze 5 in. liquid tube to the indoor coil.
2. Wrap filter drier with damp cloth.
3. Braze filter drier to 5 in. long liquid tube from step 1.
4. Connect and braze liquid refrigerant tube to the filter drier.

Suction Line Filter Drier

The suction line drier is specifically designed to operate with Puron®, use only factory authorized components. Suction line filter drier is used in cases where acid might occur, such as burnout. Heat pump units must have the drier installed between the compressor and accumulator only. Remove after 10 hours of operation. Never leave suction line filter drier in a system longer than 72 hours (actual time).

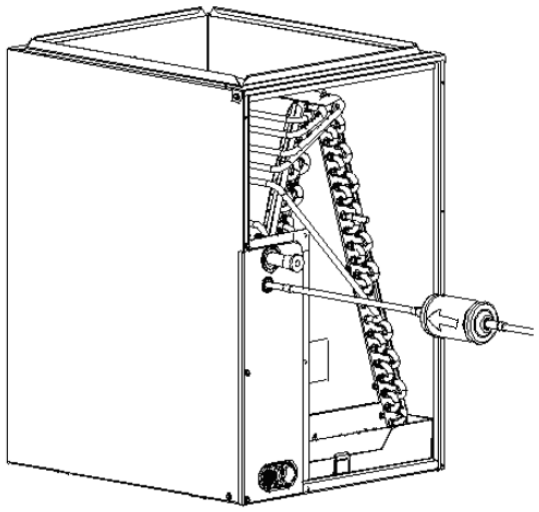

A05178

Fig. 20 – Liquid Line Filter Drier - AC

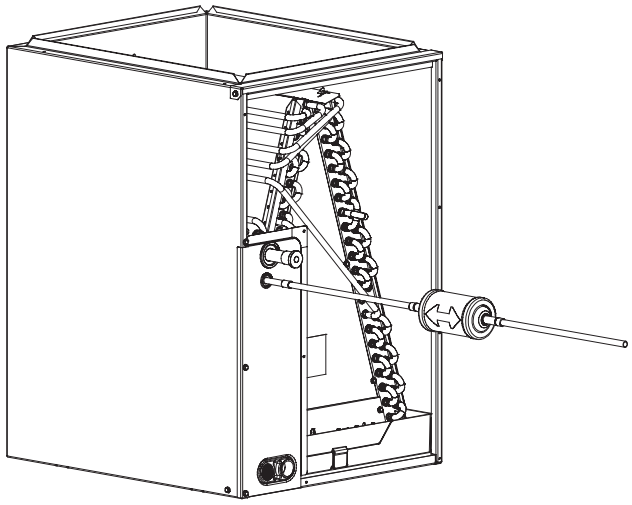

A05227

Fig. 21 – Liquid Line Filter Drier - HP

Accumulator

The accumulator is specifically designed to operate with Puron® or R22 respectfully; use only factory-authorized components. Under some light load conditions on indoor coils, liquid refrigerant is present in suction gas returning to compressor. The accumulator stores liquid and allows it to boil off into a vapor so it can be safely returned to compressor. Since a compressor is designed to pump refrigerant in its gaseous state, introduction of liquid into it could cause severe damage or total failure of compressor.

The accumulator is a passive device which seldom needs replacing. Occasionally its internal oil return orifice or bleed hole may become plugged. Some oil is contained in refrigerant returning to compressor. It cannot boil off in accumulator with liquid refrigerant. The bleed hole allows a small amount of oil and refrigerant to enter the return line where velocity of refrigerant returns it to compressor. If bleed hole plugs, oil is trapped in accumulator, and compressor will eventually fail from lack of lubrication. If bleed hole is plugged, accumulator must be changed. The accumulator has a fusible element located in the bottom end bell. (See Fig. 22.) This fusible element will melt at 430°F//221°C and vent the refrigerant if this temperature is reached either internal or external to the system. If fuse melts, the accumulator must be replaced.

To change accumulator:

1. Shut off all power to unit.
2. Recover all refrigerant from system.
3. Break vacuum with dry nitrogen. Do not exceed 5 psig.

NOTE: Coil may be removed for access to accumulator. Refer to appropriate sections of Service Manual for instructions.

⚠ CAUTION

PERSONAL INJURY HAZARD

Failure to follow this caution may result in personal injury.

Wear safety glasses, protective clothing, and gloves when handling refrigerant.

4. Remove accumulator from system with tubing cutter.
5. Tape ends of open tubing.
6. Scratch matching marks on tubing studs and old accumulator. Scratch matching marks on new accumulator. Unbraze stubs from old accumulator and braze into new accumulator.
7. Thoroughly rinse any flux residue from joints and paint with corrosion-resistant coating such as zinc-rich paint.
8. Install factory authorized accumulator into system with copper slip couplings.
9. Evacuate and charge system.

Pour and measure oil quantity (if any) from old accumulator. If more than 20 percent of oil charge is trapped in accumulator, add new POE oil to compressor to make up for this loss.

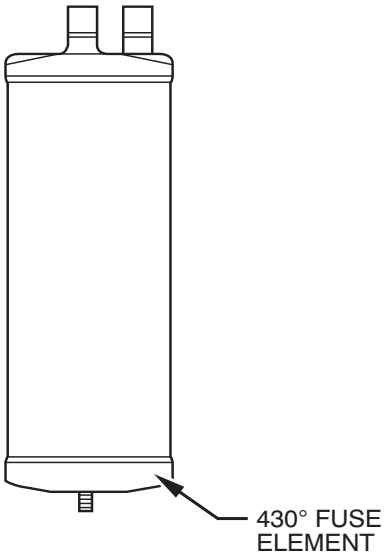

A88410

Fig. 22 – Accumulator

Thermostatic Expansion Valve (TXV)

All fan coils and furnace coils will have a factory installed thermostatic expansion valve (TXV). The TXV will be a bi-flow, hard-shutoff with an external equalizer and a balance port pin. A hard shut-off TXV does not have a bleed port. Therefore, minimal equalization takes place after shutdown. TXVs are specifically designed to operate with Puron® or R-22 refrigerant, use only factory authorized TXV's. **Do not interchange Puron and R-22 TXVs.**

TXV Operation

The TXV is a metering device that is used in air conditioning and heat pump systems to adjust to changing load conditions by maintaining a preset superheat temperature at the outlet of the evaporator coil. The volume of refrigerant metered through the valve seat is dependent upon the following:

1. Superheat temperature is sensed by cap tube sensing bulb on suction tube at outlet of evaporator coil. This temperature is converted into pressure by refrigerant in the bulb pushing downward on the diaphragm which opens the valve via the pushrods.
2. The suction pressure at the outlet of the evaporator coil is transferred via the external equalizer tube to the underside of the diaphragm. This is needed to account for the indoor coil pressure drop. Residential coils typically have a high pressure drop, which requires this valve feature.
3. The pin is spring loaded, which exerts pressure on the underside of the diaphragm. Therefore, the bulb pressure works against the spring pressure and evaporator suction pressure to open the valve.
   If the load increases, the temperature increases at the bulb, which increases the pressure on the top side of the diaphragm. This opens the valve and increases the flow of refrigerant. The increased refrigerant flow causes the leaving evaporator temperature to decrease. This lowers the pressure on the diaphragm and closes the pin. The refrigerant flow is effectively stabilized to the load demand with negligible change in superheat.

Install TXV

The thermostatic expansion valve is specifically designed to operate with a refrigerant type. Do not use an R-22 TXV on a Puron system, and do not use a Puron valve on an R-22 system. Refer to Product Data Sheet for the appropriate TXV kit number.

⚠ CAUTION

UNIT OPERATION HAZARD

Failure to follow this caution may result in equipment damage or improper operation.

Al indoor coil units must be installed with a hard shut off Puron® TXV metering device.

IMPORTANT: The TXV should be mounted as close to the indoor coil as possible and in a vertical, upright position. Avoid mounting the inlet tube vertically down. The valve is more susceptible to malfunction due to debris if inlet tube is facing down. A factory-approved filter drier must be installed in the liquid line at the indoor unit.

Installing TXV in Place of Piston in a Rated Indoor Coil (pre-2006)

1. Pump system down to 2 psig and recover refrigerant.
2. Remove hex nut from piston body. Use backup wrench on fan coils.
3. Remove and discard factory-installed piston. Be sure Teflon seal is in place.
4. Reinstall hex nut. Finger tighten nut plus 1/2 turn.

NOTE: If the piston is not removed from the body, TXV will not function properly.

⚠ CAUTION

EQUIPMENT DAMAGE HAZARD

Failure to follow this caution may result in equipment damage or improper operation.

Use a brazing shield and wrap TXV with wet cloth or use heat sink material

5. Install TXV on indoor coil liquid line. Sweat swivel adapter to inlet of indoor coil and attach to TXV outlet. Use backup wrench to avoid damage to tubing or valve. Sweat inlet of TXV, marked "IN" to liquid line. Avoid excessive heat which could damage valve.
6. Install vapor elbow with equalizer adapter to suction tube of line set and suction connection to indoor coil. Adapter has a 1/4-in. male connector for attaching equalizer tube.
7. Connect equalizer tube of TXV to 1/4-in. equalizer fitting on vapor line adapter.
8. Attach TXV bulb to horizontal section of suction line using clamps provided. Insulate bulb with field-supplied insulation tape. See Fig. 23 for correct positioning of sensing bulb.
9. Proceed with remainder of unit installation.

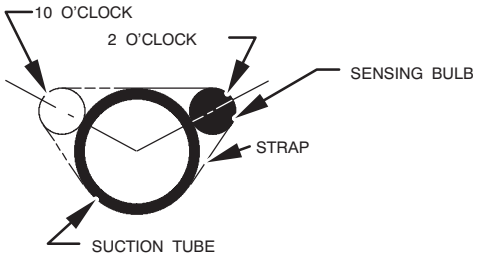

A08083

Fig. 23 – Position of Sensing Bulb

Replacing TXV on an Indoor Coil (pre-2006)

1. Pump system down to 2 psig and recover refrigerant.
2. Remove coil access panel and fitting panel from front of cabinet.
3. Remove TXV support clamp using a 5/16-in. nut driver. Save the clamp.
4. Remove R-22 TXV using a backup wrench on flare connections to prevent damage to tubing.
5. Using wire cutters, cut equalizer tube off flush with vapor tube inside cabinet.
6. Remove bulb from vapor tube inside cabinet.
7. Braze equalizer stub-tube closed. Use protective barrier as necessary to prevent damage to drain pan.

IMPORTANT: Route the equalizer tube of TXV through suction line connection opening in fitting panel prior to replacing fitting panel around tubing.

8. Install TXV with 3/8-in. copper tubing through small hole in service panel. Use wrench and backup wrench, to avoid damage to tubing or valve, to attach TXV to distributor.
9. Reinstall TXV support clamp (removed in item 3).
10. Attach TXV bulb to vapor tube inside cabinet, in same location as original was when removed, using supplied bulb clamps (nylon or copper). See Fig. 23 for correct positioning of sensing bulb.
11. Route equalizer tube through suction connection opening (large hole) in fitting panel and install fitting panel in place.
12. Sweat inlet of TXV, marked "IN" to liquid line. Avoid excessive heat which could damage valve.
13. Install vapor elbow with equalizer adapter to vapor line of line set and vapor connection to indoor coil. Adapter has a 1/4-in. male connector for attaching equalizer tube.
14. Connect equalizer tube of TXV to 1/4-in. equalizer fitting on vapor line adapter. Use backup wrench to prevent damage to equalizer fitting.
15. Proceed with remainder of unit installation.

Replacing TXV on Indoor Coil (post-2006)

1. Pump system down to 2 psig and recover refrigerant.
2. Remove coil access panel and fitting panel from front of cabinet.
3. Remove TXV support clamp using a 5/16-in. nut driver. Save the clamp (N coils only).
4. Remove TXV using a backup wrench on connections to prevent damage to tubing.
5. Remove equalizer tube from suction line of coil.
   Note: Some coils may have a mechanical connection. If coil has a braze connection, use file or tubing cutter to cut brazed equalizer line approximately 2 inches above suction tube.
6. Remove bulb from vapor tube inside cabinet.
7. Install the new TXV using a wrench and backup wrench to avoid damage to tubing or valve to attach TXV to distributor.
8. Reinstall TXV support clamp (removed in item 3). (N coils only.)
9. Attach equalizer tube to suction line. If coil has mechanical connection, then use wrench and back up wrench to attach. If coil has brazed connection, use file or tubing cutters to remove mechanical flare nut from equalizer line. Then use coupling to braze the equalizer line to stub (previous equalizer line) in suction line.
10. Attach TXV bulb to vapor tube inside cabinet, in same location as original was when removed, using supplied bulb clamps (nylon or copper). See Fig. 23 for correct positioning of sensing bulb.
11. Route equalizer tube through suction connection opening (large hole) in fitting panel and install fitting panel in place.
12. Sweat inlet of TXV, marked "IN" to liquid line. Avoid excessive heat which could damage valve.
13. Proceed with remainder of unit installation.

MAKE PIPING CONNECTIONS

⚠ WARNING

PERSONAL INJURY AND ENVIRONMENTAL HAZARD

Failure to follow this warning could result in personal injury or death.

Relieve pressure and recover all refrigerant before system repair or final unit disposal.

Use all service ports and open all flow-control devices, including solenoid valves.

⚠ CAUTION

UNIT DAMAGE HAZARD

Failure to follow this caution may result in equipment damage or improper operation.

Do not leave system open to atmosphere any longer than minimum required for installation. POE oil in compressor is extremely susceptible to moisture absorption. Always keep ends of tubing sealed during installation.

⚠ CAUTION

UNIT DAMAGE HAZARD

Failure to follow this caution may result in equipment damage or improper operation.

If ANY refrigerant tubing is buried, provide a 6 in. vertical rise at service valve. Refrigerant tubing lengths up to 36 in. may be buried without further special consideration. Do not bury lines longer than 36 in.

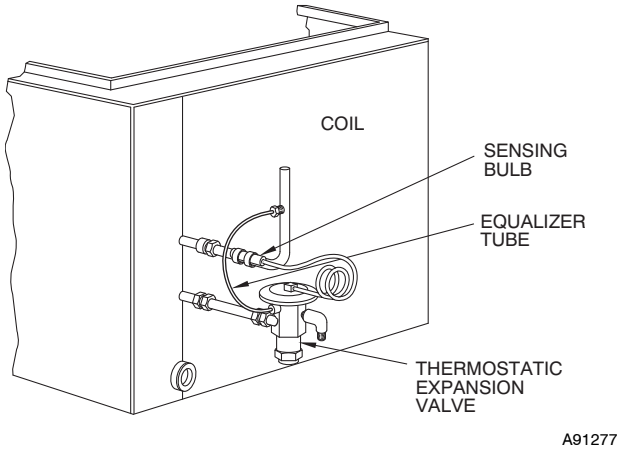

Fig. 24 – Typical TXV Installation

REFRIGERATION SYSTEM REPAIR

Leak Detection

New installations should be checked for leaks prior to complete charging. If a system has lost all or most of its charge, system must be pressurized again to approximately 150 psi minimum and 375 psi maximum. This can be done by adding refrigerant using normal charging procedures or by pressurizing system with nitrogen (less expensive than refrigerant). Nitrogen also leaks faster than refrigerants. Nitrogen cannot, however, be detected by an electronic leak detector. (See Fig. 25.)

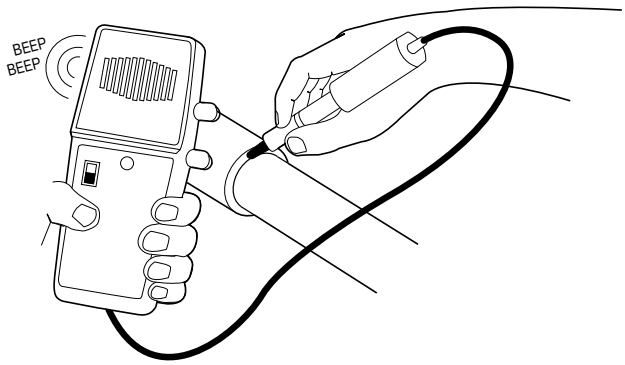

A95422

Fig. 25 – Electronic Leak Detection

⚠ WARNING

PERSONAL INJURY AND UNIT DAMAGE HAZARD

Failure to follow this warning could result in personal injury or death.

Due to the high pressure of nitrogen, it should never be used without a pressure regulator on the tank.

Assuming that a system is pressurized with either all refrigerant or a mixture of nitrogen and refrigerant, leaks in the system can be found with an electronic leak detector that is capable of detecting specific refrigerants.

If system has been operating for some time, first check for a leak visually. Since refrigerant carries a small quantity of oil, traces of oil at any joint or connection is an indication that refrigerant is leaking at that point.

A simple and inexpensive method of testing for leaks is to use soap bubbles. (See Fig. 26.) Any solution of water and soap may be used. Soap solution is applied to all joints and connections in system. A small pinhole leak is located by tracing bubbles in soap solution around leak. If the leak is very small, several minutes may pass before a bubble will form. Popular commercial leak detection solutions give better, longer-lasting bubbles and more accurate results than plain soapy water. The bubble solution must be removed from the tubing and fittings after checking for leaks as some solutions may corrode the metal.

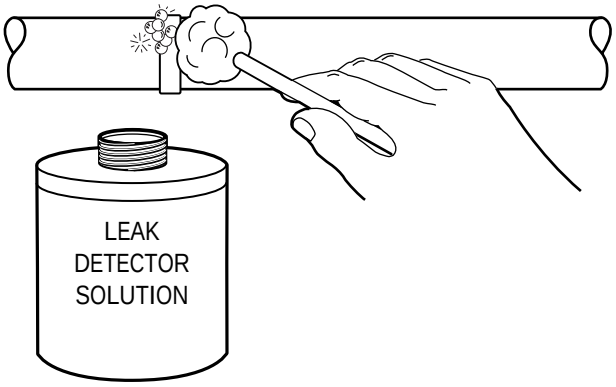

A95423

Fig. 26 – Bubble Leak Detection

You may use an electronic leak detector designed for specific refrigerant to check for leaks. (See Fig. 25.) This unquestionably is the most efficient and easiest method for checking leaks. There are various types of electronic leak detectors. Check with manufacturer of equipment for suitability. Generally speaking, they are portable, lightweight, and consist of a box with several switches and a probe or sniffer. Detector is turned on and probe is passed around all fittings and connections in system. Leak is detected by either the movement of a pointer on detector dial, a buzzing sound, or a light.

In all instances when a leak is found, system charge must be recovered and leak repaired before final charging and operation. After leak testing or leak is repaired, replace liquid line filter drier, evacuate system, and recharge with correct refrigerant quantity.

Coil Removal

Coils are easy to remove if required for compressor removal, or to replace coil.

1. Shut off all power to unit.
2. Recover refrigerant from system through service valves.
3. Break vacuum with nitrogen.
4. Remove top cover. (See Remove Top Cover in Cabinet section of the manual.)
5. Remove screws in base pan to coil grille.
6. Remove coil grille from unit.
7. Remove screws on corner post holding coil tube sheet.

⚠ WARNING

FIRE HAZARD

Failure to follow this warning could result in personal injury or equipment damage.

Cut tubing to reduce possibility of personal injury and fire.

8. Use midget tubing cutter to cut liquid and vapor lines at both sides of coil. Cut in convenient location for easy reassembly with copper slip couplings.
9. Lift coil vertically from basepan and carefully place aside.
10. Reverse procedure to reinstall coil.
11. Replace filter drier, evacuate system, recharge, and check for normal systems operation.

Aluminum Coil Removal

For all aluminum coils, the coil has two fin isolators on the top of the coil as shown in Fig. 27. Also, the top and bottom of the tube sheets have edge guards. These must be reinstalled after removal of the coil.

The orientation of the fin isolator is shown in Fig. 28. There is a threaded mechanical fitting on the liquid distributor. This connection is not field serviceable and should not be disturbed.

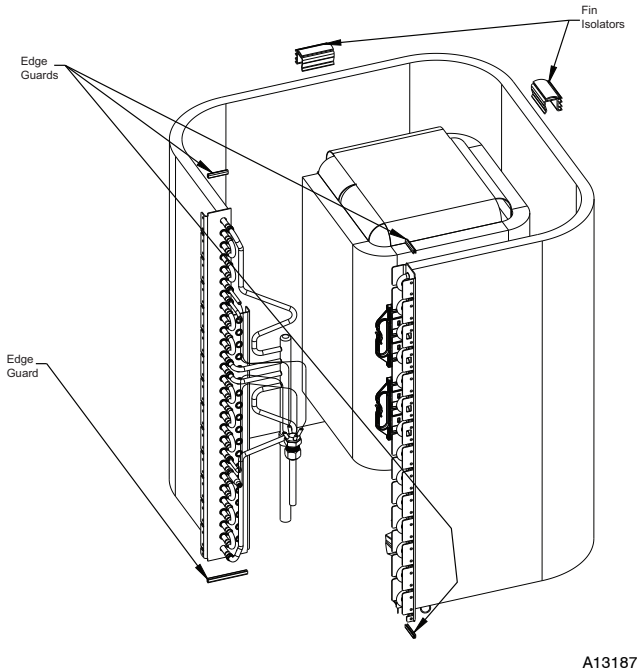

Fig. 27 – Edge Guards & Fin Isolator Location

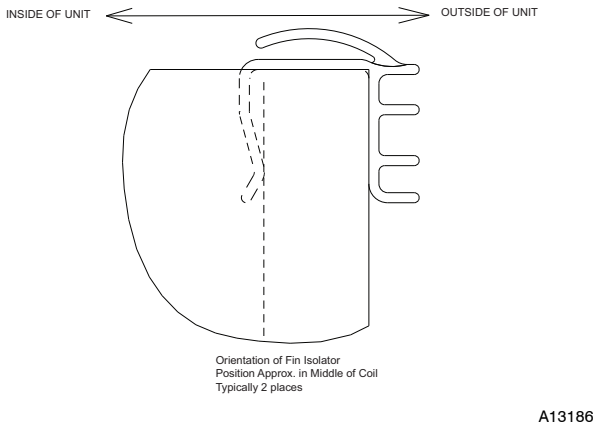

Fig. 28 – Fin Isolator Orientation

The copper stub tube connection to the liquid service valve needs to be un-brazed for coil removal. (See Fig. 29.)

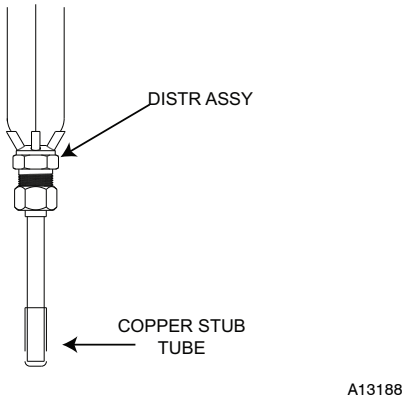

Fig. 29 – Copper Stub Tube Connection

Compressor Removal and Replacement

Once it is determined that compressor has failed and the reason established, compressor must be replaced.

⚠ CAUTION

PERSONAL INJURY HAZARD

Failure to follow this caution may result in personal injury.

Turn off all power to unit before proceeding. Wear safety glasses, protective clothing, and gloves when handling refrigerant. Acids formed as a result of motor burnout can cause burns.

⚠ CAUTION

PERSONAL INJURY HAZARD

Failure to follow this caution may result in personal injury.

Wear safety glasses, protective clothing, and gloves when handling refrigerant and when using brazing torch..

1. Shut off all power to unit.
2. Remove and recover all refrigerant from system until pressure gauges read 0 psi. Use all service ports. Never open a system under a vacuum to atmosphere. Break vacuum with dry nitrogen holding charge first. Do not exceed 5 psig.
3. Disconnect electrical leads from compressor. Disconnect or remove crankcase heater and remove compressor hold-down bolts.
4. Cut compressor from system with tubing cutter. Do not use brazing torch for compressor removal. Oil vapor may ignite when compressor is disconnected.
5. Scratch matching marks on stubs in old compressor. Make corresponding marks on replacement compressor.
6. Use torch to remove stubs from old compressor and to reinstall them in replacement compressor.
7. Use copper couplings to tie compressor back into system.
8. Replace filter drier, evacuate system, recharge, and check for normal system operation.

⚠ CAUTION

UNIT DAMAGE HAZARD

Failure to follow this caution may result in equipment damage or improper operation.

Do not leave system open to atmosphere. Compressor oil is highly susceptible to moisture absorption.

System Clean-Up After Burnout

Some compressor electrical failures can cause motor to burn. When this occurs, by-products of burn, which include sludge, carbon, and acids, contaminate system. Test the oil for acidity using POE oil acid test to determine burnout severity. If burnout is severe enough, system must be cleaned before replacement compressor is installed. The 2 types of motor burnout are classified as mild or severe.

In mild burnout, there is little or no detectable odor. Compressor oil is clear or slightly discolored. An acid test of compressor oil will be negative. This type of failure is treated the same as mechanical failure. Liquid-line strainer should be removed and liquid-line filter drier replaced.

In a severe burnout, there is a strong, pungent, rotten egg odor. Compressor oil is very dark. Evidence of burning may be present in tubing connected to compressor. An acid test of compressor oil will be positive. Follow these additional steps:

1. TXV must be cleaned or replaced.
2. Drain any trapped oil from accumulator if used.
3. Remove and discard liquid-line strainer and filter drier.
4. After system is reassembled, install liquid and suction-line Puron® filter driers.

NOTE: On heat pumps, install suction line drier between compressor and accumulator.

5. Operate system for 10 hr. Monitor pressure drop across drier. If pressure drop exceeds 3 psig replace suction-line and liquid-line filter driers. Be sure to purge system with dry nitrogen when replacing filter driers. If suction line driers must be replaced, retest pressure drop after additional 10 hours (run time). Continue to monitor pressure drop across suction line filter drier. After 10 hr of run time, remove suction-line filter drier and replace liquid-line filter drier. Never leave suction-line filter drier in system longer than 72 hr (run time).
6. Charge system. (See unit information plate.)

⚠ CAUTION

UNIT DAMAGE HAZARD

Failure to follow this caution may result in equipment damage or improper operation.

Only suction line filter driers should be used for refrigerant and oil clean up. Use of non-approved products could limit system life and void unit warranty.

Evacuation

Proper evacuation of the system will remove non-condensibles and assure a tight, dry system before charging. The two methods used to evacuate a system are the deep vacuum method and the triple evacuation method.

Deep Vacuum Method

The deep vacuum method requires a vacuum pump capable of pulling a vacuum of 500 microns and a vacuum gauge capable of accurately measuring this vacuum depth. The deep vacuum method is the most positive way of assuring a system is free of air and moisture. (See Fig. 30.)

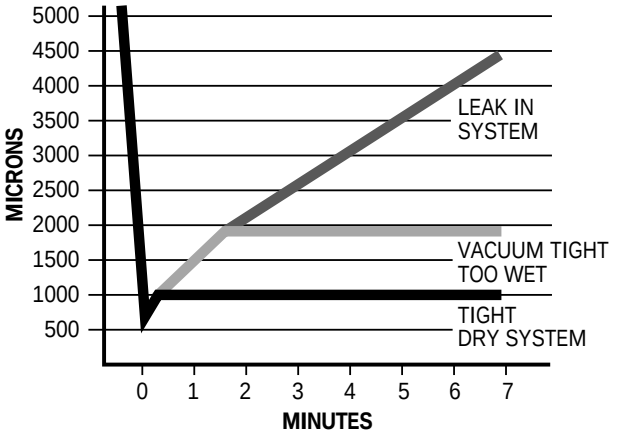

A95424

Fig. 30 – Deep Vacuum Graph

Triple Evacuation Method

The triple evacuation method should be used when vacuum pump is only capable of pumping down to 28 in. of mercury vacuum and system does not contain any liquid water. Refer to Fig. 31 and proceed as follows:

1. Pump system down to 28 in. of mercury and allow pump to continue operating for an additional 15 minutes.
2. Close service valves and shut off vacuum pump.
3. Connect a nitrogen cylinder and regulator to system and open until system pressure is 2 psig.
4. Close service valve and allow system to stand for 1 hr. During this time, dry nitrogen will be able to diffuse throughout the system absorbing moisture.
5. Repeat this procedure as indicated in Fig. 31. System will then be free of any contaminants and water vapor.

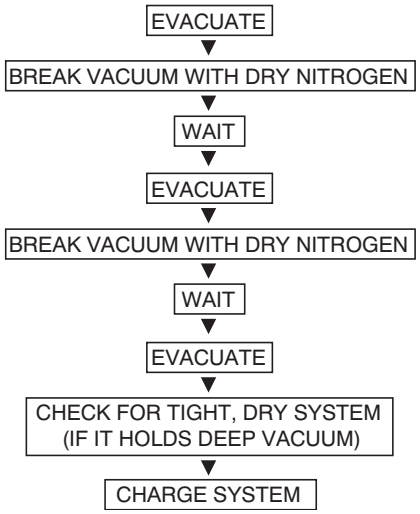

A95425

Fig. 31 – Triple Evacuation Method

CHECK CHARGE

(See Charging Tables 11 & 13)

Factory charge amount and desired subcooling are shown on unit rating plate. Charging method is shown on information plate inside unit. To properly check or adjust charge, conditions must be favorable for subcooling charging. Favorable conditions exist when the outdoor temperature is between 70°F and 100°F (21.11°C and 37.78°C), and the indoor temperature is between 70°F and 80°F (21.11°C and 26.67°C). Follow the procedure below:

Unit is factory charged for 15ft (4.57 m) of lineset. Adjust charge by adding or removing 0.6 oz/ft of 3/8 liquid line above or below 15ft (4.57 m) respectively.

For standard refrigerant line lengths (80 ft/24.38 m or less), allow system to operate in cooling mode at least 15 minutes. If conditions are favorable, check system charge by subcooling method. If any adjustment is necessary, adjust charge slowly and allow system to operate for 15 minutes to stabilize before declaring a properly charged system.

If the indoor temperature is above 80°F (26.67°C), and the outdoor temperature is in the favorable range, adjust system charge by weight based on line length and allow the indoor temperature to drop to 80°F (26.67°C) before attempting to check system charge by subcooling method as described above.

If the indoor temperature is below 70°F (21.11°C), or the outdoor temperature is not in the favorable range, adjust charge for line set length above or below 15ft (4.57 m) only. Charge level should then be appropriate for the system to achieve rated capacity. The charge level could then be checked at another time when the both indoor and outdoor temperatures are in a more favorable range.

NOTE: If line length is beyond 80 ft (24.38 m) or greater than 20 ft (6.10 m) vertical separation, See Long Line Guideline for special charging requirements.

TROUBLESHOOTING WITH SUPERHEAT

This troubleshooting routine was developed to diagnose cooling problems using superheat in TXV systems. It is effective on heat pumps in cooling mode as well as air conditioners. The system must utilize a TXV as the expansion device in cooling mode.

Basic Diagnostics

NOTE: When checking refrigerant charge and troubleshooting operating systems, the indoor airflow has significant effect on the determination. If you are at this stage, it is assumed you have already checked the subcooling once and believe the charge is correct. From this point, the airflow must be verified prior to proceeding, hence step 1 below.

1. Check or verify proper indoor airflow
   - Indoor air filter
   - Duct dampers and supply registers are open
   - Indoor coil for debris
2. Check subcooling at OD unit liquid service valve
   - Outdoor airflow (debris on coil, etc.)
   - Set the subcooling at value listed on rating plate if standard lineset
   - Set the subcooling at the maximum of 10°F or value listed on rating plate if a long line application
3. Check superheat at OD unit vapor service valve.
   - If low (< 2°F), proceed to Low SuperHeat section.
   - If between 2 and 20°F/11°C valve is probably operating properly.
   - If greater than 20°F/11°C, perform Pseudo Evaporator SuperHeat Instructions check as follows:
     - — Check refrigerant pressure at vapor service valve and refrigerant temperature at outlet of evaporator.
     - — Use suction line geometry (diameter and equivalent length), unit capacity and Tables 7 and 8 to determine suction pressure drop.
       - For standard lineset diameters (vapor service valve diameters and larger) and lengths (less than 80 ft), generally no pressure adjustment (per Table 6 or 7) is required.
       - For longer (greater than 80 ft) and small diameter . linesets (less than service valve size), correct pressure (add to gauge pressure reading) per Tables 6 and 7.
   - If Pseudo Superheat is greater than 15, proceed to High SuperHeat section.
   - If Pseudo Evaporator Superheat is between 2 and 15, TXV appears to be functioning properly.
   - If operation erratic (hunting), proceed to Hunting Superheat °F Superheat in repetition section.

NOTE: Hunting is when the valve superheat swings more than 10°.

Low Superheat with Normal or Low Suction Pressure

NOTE: Normal or low suction pressure is considered for R-22: < 80 psig, Puron: < 135 psig

1. Re-check airflow and then check sensing bulb tightness, orientation on vapor tube and is properly wrapped.
   - Low Superheat with Normal or Low Suction Pressure If OK proceed to Step 2
2. Check superheat at Vapor Service Valve and Pseudo Evaporator Superheat.
   - If both are less than 2°F, TXV likely not controlling properly, i.e. stuck open -> REPLACE VALVE
   - If superheat is higher than 15°F, proceed to Step 3
3. Perform TXV function check.
   - With system running, place sensing bulb in ice bath for ~1 minute -> superheat should increase.
     - — If no response, Replace Valve
     - — If OK proceed to Step 4
4. Check for even temperature distribution at outlet of each circuit of evaporator
   - If greater than 15°F between circuits, distributor or coil has a restriction.
   - If OK proceed to Step 5

Low Superheat with High Suction Pressure

NOTE: High suction pressure is considered for R-22: > ~80 psig, Puron: > ~135 psig. An application issue or other system component failure typically causes this condition.

5. R-22 Systems: Check that proper valve used (not an R-410A valve)
   - If OK proceed to Step 6
6. Check airflow, sensing bulb tightness, orientation on vapor tube and ensure bulb is properly wrapped.
   - If OK proceed to Step 7
7. Check that compressor is pumping properly

NOTE: Loose Rules of Thumb: Is discharge saturated ~20°F higher than ambient temperature? Is discharge superheat between 15 and 50?

   - If OK proceed to Step 8
8. Recheck Airflow and Subcooling.
   - If OK proceed to Replace Valve

High Superheat with Normal or Low Pressure

NOTE: Normal or low suction pressure is considered: R-22 < 80 psig, Puron < 135 psig.

9. Check for restriction in liquid line (kinked line, filter drier restricted, etc.)
   - If OK proceed to Step 10
10. Check for restriction in suction line (kink, restricted suction filter drier etc.))
    - If OK proceed to Step 11
11. Check power element cap tube is not broken
    - If OK proceed to Step 12
12. Check that equalizer tube is not kinked or plugged
    - If OK proceed to Step 13
13. Check that inlet screen (R-22 systems) is not restricted
    - If OK proceed to Step 14
14. Replace Valve

High Superheat with Normal or High Suction Pressure

NOTE: Normal to High suction pressure is considered for R-22: > ~65 psig, Puron: > ~110 psig. An application issue or other system component failure typically causes this condition.

15. Check airflow, sensing bulb tightness, orientation on vapor tube and ensure bulb is properly wrapped.
    - If OK proceed to Step 16
16. R-410A Systems: Make sure proper valve is used (Not R-22)
    - If OK proceed to Step 17
17. Check for even temperature distribution at outlet of each circuit of evaporator
    - If OK proceed to Step 18
18. Check for high evaporator load: Return Air Leaks, high indoor wet bulb and/or dry bulb temp, undersized system, etc.
    - If OK proceed to Step 19
19. Check that compressor is pumping properly
    - Loose Rule of Thumb: Is discharge saturated ~20°F higher than ambient temperature? Is discharge superheat between 15°F and 50°F?

Hunting Superheat

NOTE: Hunting is when the valve superheat swings more than 10°F Superheat in repetition. This is typically an application issue.

20. Check for obvious kinked or pinched distributor (capillary) tubes causing imbalance to the circuiting.
    - If OK proceed to Step 21
21. Check that proper size valve is used per Product Literature.
    - If OK proceed to Step 22
22. Check airflow, sensing bulb tightness, orientation on vapor tube and ensure bulb is properly wrapped.
    - If OK proceed to Step 23
23. Check for even temperature distribution (±5° difference) at outlet of each circuit of evaporator and for even air distribution over all evaporator slabs
    - If OK proceed to Step 24.
24. Move sensing bulb further down suction line.
    - If problem not corrected, replace valve

Pseudo Evaporator Superheat Instructions

The Pseudo Evaporator Superheat calculates the superheat at the outlet of the evaporator with known and available information. Because there generally is not a pressure port on the vapor line at the indoor coil, this procedure allows the service personnel to evaluate the evaporator superheat with the vapor pressure port at the outdoor unit.

The method requires the following information:

- Suction line temperature at the outlet of the evaporator (°F).
- Suction line pressure at the outdoor unit (psig).
- Outdoor nominal unit size (btuh).
- Suction line equivalent line length (ft).
- Suction line pressure drop from tables (Table 6 and Table 7).
- Pressure-Temperature relationship for refrigerant used (P-T Chart).

If system uses a vapor line the same size as vapor service valve fitting or larger AND the line set equivalent length is 80 feet or less, the pressure drop in vapor line of line set can be ignored.

1. Take suction line temperature at outlet of evaporator at indoor unit.
2. Take suction service valve pressure at OD unit.
3. Determine lineset vapor line equivalent length and tube diameter.
4. Determine suction line pressure drop from Table 6 (Puron) or Table 7 (R-22).
5. Calculate Pseudo Evaporator Superheat.
    - Add the suction line pressure drop to the pressure reading obtained at suction service valve.

NOTE: For nominal and larger diameter vapor lines with standard length linesets (vapor line same size as service valve fitting size and larger with equivalent length less than 80 ft) the pressure drop can be ignored – use vapor service valve pressure and evaporator outlet temperature to calculate superheat

- Determine saturated evaporator temperature from a refrigerant pressure temperature relationship chart (PT chart).
- Subtract saturated evaporator from evaporator suction line temperature to obtain evaporator superheat.

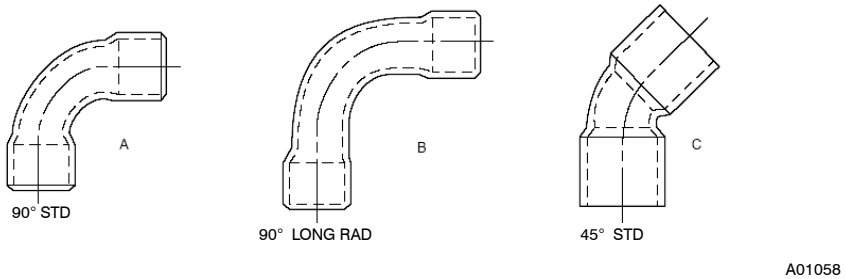

Fig. 32 – Tube Fitting Geometry

Table 5—Fitting Losses in Equivalent Feet

TUBE SIZE OD (IN.)	90° STD (A)	90° LONG RAD (B)	45° STD (C)
1/2	1.2	0.8	0.6
5/8	1.6	1.0	0.8
3/4	1.8	1.2	0.9
7/8	2.0	1.4	1.0
1–1/8	2.6	1.7	1.3

Table 6—Puron System Suction Pressure Drop

Nominal Size (Btuh)	Suction Line OD (in.)	Pressure Drop (psi/100 ft)	Suction Velocity fpm	Puron Suction Line Pressure Drop (psig) Total Equivalent Line Length (ft)									
				20	50	80	100	125	150	175	200	225	250
18000	1/2	9.9	1649	2	5	8	10	12	15	17	20	22	25
	5/8	3.1	1018	1	2	2	3	4	5	5	6	7	8
	3/4	1.2	678	0	1	1	1	1	2	2	2	3	3
24000	1/2	16.7	2199	3	8	13	17	21	25	29	33	38	42
	5/8	5.2	1357	1	3	4	5	7	8	9	10	12	13
	3/4	2.0	904	0	1	2	2	2	3	3	4	4	5
	7/8	1.0	678	0	0	1	1	1	1	2	2	2	2
30000	5/8	7.8	1696	2	4	6	8	10	12	14	16	18	20
	3/4	2.9	1130	1	1	2	3	4	4	5	6	7	7
	7/8	1.5	848	0	1	1	1	2	2	3	3	3	4
36000	5/8	10.9	2036	2	5	9	11	14	16	19	22	24	27
	3/4	4.1	1356	1	2	3	4	5	6	7	8	9	10
	7/8	2.0	1017	0	1	2	2	3	3	4	4	5	5
42000	5/8	14.1	2375	3	7	11	14	18	21	25	28	32	35
	3/4	5.4	1582	1	3	4	5	7	8	9	11	12	14
	7/8	2.7	1187	1	1	2	3	3	4	5	5	6	7
	1 1/8	0.8	696	0	0	1	1	1	1	1	2	2	2
48000	3/4	6.9	1808	1	3	6	7	9	10	12	14	16	17
	7/8	3.5	1357	1	2	3	3	4	5	6	7	8	9
	1 1/8	1.0	796	0	0	1	1	1	1	2	2	2	2
60000	3/4	10.4	2260	2	5	8	10	13	16	18	21	23	26
	7/8	5.2	1696	1	3	4	5	6	8	9	10	12	13
	1 1/8	1.4	995	0	1	1	1	2	2	3	3	3	4

Line set application not recommended

Example 1

While on a service call, after checking for proper indoor and outdoor airflow, Tom finds the following pressures and temperatures at the service valves of a Puron air conditioner:

- Liquid line pressure = 340 psig
- Liquid line temperature = 97°F
- Suction line pressure = 125 psig
- Suction line temperature = 70°F

Using a Puron PT chart, the subcooling is determined to be 8°F, which is within ±3 of the 10°F listed on the rating plate. Tom believes the charge is correct. He calculates the superheat to be approximately 27°F superheat. The apparently high superheat has Tom concerned.

Tom uses the Pseudo Evaporator Superheat method to check the TXV performance. The system is a 3-ton Puron air conditioner with 75 feet equivalent length of 3/4" suction line. Based on Table 6, the system has approximately 3-psig pressure drop in the vapor line. Per the instructions, he takes the suction line temperature at the outlet of the evaporator and finds it to be 53°F. Tom adds 3 psig to the 125-psig suction pressure at the outdoor unit to get 128 psig evaporator pressure. The saturated pressure of 128 equates to 44°F. Tom calculates the evaporator superheat to be (53°F - 44°F =) 9°F. The TXV appears to be operating properly.

NOTE: The additional superheat at the compressor is due principally to heat gain in the 75 feet of suction line with a minor contribution by the pressure drop. Because the suction line of the lineset was the same size as the vapor service valve fitting and less than 80 feet, Tom could have ignored the pressure drop in the suction line and obtained the evaporator superheat by using the vapor service valve pressure of 125 psig (saturated temperature = 43°F) and the evaporator outlet temperature of 53°F. The evaporator superheat is calculated to be (53°F – 43°F =) 10 °F.

Table 7—R-22 System Suction Pressure Drop

Nominal Size (Btuh)	Line OD (in.)	Pressure Drop (psi/100 ft)	Suction Velocity Fpm	R-22 Suction Line Pressure Drop (psig) Total Equivalent Line Length (ft)									
				20	50	80	100	125	150	175	200	225	250
18000	5/8	13.6	2563	3	7	11	14	17	20	24	27	31	34
	5/8	4.0	1539	1	2	3	4	5	6	7	8	9	10
	3/4	1.5	1025	0	1	1	1	2	2	3	3	3	4
	7/8	0.8	769	0	0	1	1	1	1	1	2	2	2
24000	5/8	6.7	2052	1	3	5	7	8	10	12	13	15	17
	3/4	2.5	1367	1	1	2	3	3	4	4	5	6	6
	7/8	1.3	1026	0	1	1	1	2	2	2	3	3	3
30000	5/8	10.1	2565	2	5	8	10	13	15	18	20	23	25
	3/4	3.8	1708	1	2	3	4	5	6	7	8	9	9
	7/8	1.9	1282	0	1	2	2	2	3	3	4	4	5
36000	3/4	5.3	2050	1	3	4	5	7	8	9	11	12	13
	7/8	2.6	1538	1	1	2	3	3	4	5	5	6	7
	1 1/8	0.7	902	0	0	1	1	1	1	1	1	2	2
42000	3/4	7.0	2392	1	3	6	7	9	10	12	14	16	17
	7/8	3.5	1795	1	2	3	3	4	5	6	7	8	9
	1 1/8	1.0	1053	0	0	1	1	1	1	2	2	2	2
48000	3/4	8.9	2733	2	4	7	9	11	13	16	18	20	22
	7/8	4.4	2051	1	2	4	4	6	7	8	9	10	11
	1 1/8	1.2	1203	0	1	1	1	2	2	2	2	3	3
60000	7/8	6.7	2564	1	3	5	7	8	10	12	13	15	17
	1 1/8	1.8	1504	0	1	1	2	2	3	3	4	4	5
	1 3/8	0.7	987	0	0	1	1	1	1	1	1	2	2

Line set application not recommended

Example 2

Jason is servicing a 5-ton R-22 air conditioner with 7/8" suction line. As part of his basic inspection he believes he has normal airflow because the air filters are clean, ductwork appears to be properly sized and in good shape and the evaporator coil is clean. He then checks the superheat and subcooling at the outdoor unit service valves. Taking pressures and temperatures he finds the following:

- Liquid line pressure = 260 psig
- Liquid line temperature = 110°F
- Suction line pressure = 60 psig
- Suction line temperature = 65°F

Using an R-22 PT relationship, Jason calculates the subcooling to be approximately 10°F with 30°F superheat. Because the subcooling is correct but the superheat appears to be high, he is concerned and decides to perform the Pseudo Evaporator Superheat check.

Examining the lineset, Jason finds approximately 145 ft of suction line with 4 long radius elbows. Per Fig. 33 and Table 7, each fitting has an equivalent length of 1.4 ft. The total equivalent length of the suction line is (145' + (4 * 1.4') ≈) 150 ft. Based on Table 9, Jason determines there should be 10-psig pressure-drop in the suction line.

Jason now takes the suction line temperature at the outlet of the evaporator and obtains 51°F. Per the instructions, Jason adds the 10-psig pressure-drop to the 60-psig pressure at the outdoor unit to get 70-psig at the evaporator. Saturated pressure of 70-psig equates to approximately 41°F. Jason determines the Evaporator superheat to be (51°F - 41°F =) 10°F. Jason concludes the TXV is functioning properly.

NOTE: In this situation, both the pressure drop and the heat gain in the suction line are significant contributions to the superheat at the service valve. The pressure drop contributes approximately 7°F superheat and the heat gain in the suction line contributes 13°F.

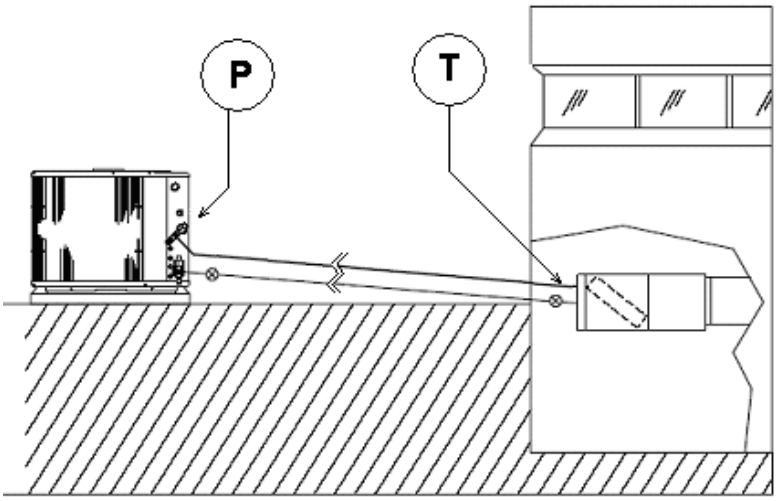

Fig. 33 – Pseudo Evaporator Superheat Pressure and Temperature Measurement Locations

Table 8—Puron® Refrigerant Pressure Temperature Chart

PSIG	°F	PSIG	°F	PSIG	°F	PSIG	°F	PSIG	°F	PSIG	°F
12	-38.2	118	39.9	224	76.9	330	102.9	436	123.3	542	140.2
14	-35.3	120	40.8	226	77.4	332	103.3	438	123.6	544	140.5
16	-32.5	122	41.6	228	78.0	334	103.7	440	124.0	546	140.8
18	-29.9	124	42.5	230	78.5	336	104.1	442	124.3	548	141.1
20	-27.3	126	43.3	232	79.1	338	104.6	444	124.7	550	141.4
22	-24.9	128	44.2	234	79.7	340	105.0	446	125.0	554	141.9
24	-22.6	130	45.0	236	80.2	342	105.4	448	125.3	558	142.5
26	-20.4	132	45.8	238	80.7	344	105.8	450	125.7	560	142.8
28	-18.3	134	46.6	240	81.3	346	106.2	452	126.0	564	143.4
30	-16.2	136	47.5	242	81.8	348	106.6	454	126.4	568	143.9
32	-14.2	138	48.2	244	82.4	350	107.0	456	126.7	570	144.2
34	-12.3	140	49.0	246	82.9	352	107.5	458	127.0	574	144.8
36	-10.4	142	49.8	248	83.4	354	107.9	460	127.4	578	145.3
38	-8.6	144	50.6	250	83.9	356	108.3	462	127.7	580	145.6
40	-6.9	146	51.4	252	84.5	358	108.7	464	128.0	584	146.2
42	-5.1	148	52.1	254	85.0	360	109.1	466	128.4	588	146.7
44	-3.5	150	52.9	256	85.5	362	109.5	468	128.7	590	147.0
46	-1.9	152	53.6	258	86.0	364	109.9	470	129.0	594	147.5
48	-0.3	154	54.4	260	86.5	366	110.3	472	129.4	598	148.1
50	1.3	156	55.1	262	87.0	368	110.7	474	129.7	600	148.4
52	2.8	158	55.8	264	87.5	370	111.1	476	130.0	604	148.9
54	4.2	160	56.5	266	88.0	372	111.5	478	130.3	606	149.2
56	5.7	162	57.3	268	88.5	374	111.9	480	130.7	608	149.4
58	7.1	164	58.0	270	89.0	376	112.2	482	131.0	610	151.3
60	8.5	166	58.7	272	89.5	378	112.6	484	131.3	612	150.0
62	9.8	168	59.4	274	90.0	380	113.0	486	131.6	614	150.2
64	11.1	170	60.1	276	90.5	382	113.4	488	131.9	616	150.5
66	12.4	172	60.7	278	91.0	384	113.8	490	132.3	618	150.7
68	13.7	174	61.4	280	91.5	386	114.2	492	132.6	620	151.0
70	15.0	176	62.1	282	92.0	388	114.6	494	132.9	624	151.5
72	16.2	178	62.8	284	92.4	390	114.9	496	133.2	626	151.8
74	17.4	180	63.4	286	92.9	392	115.3	498	133.5	628	152.1
76	18.6	182	64.1	288	93.4	394	115.7	500	133.8	630	152.3
78	19.8	184	64.7	290	93.9	396	116.1	502	134.1	634	152.8
80	20.9	186	65.4	292	94.3	398	116.4	504	134.5	636	153.1
82	22.0	188	66.0	294	94.8	400	116.8	506	134.8	638	153.3
84	23.2	190	66.7	296	95.3	402	117.2	508	135.1	640	153.6
86	24.3	192	67.3	298	95.7	404	117.5	510	135.4	644	154.1
88	25.3	194	67.9	300	96.2	406	117.9	512	135.7	646	154.3
90	26.4	196	68.6	302	96.7	408	118.3	514	136.0	648	154.6
92	27.4	198	69.2	304	97.1	410	118.6	516	136.3	650	154.8
94	28.5	200	69.8	306	97.6	412	119.0	518	136.6	654	161.8
96	29.5	202	70.4	308	98.0	414	119.4	520	136.9	656	155.6
98	30.5	204	71.0	310	98.5	416	119.7	522	137.2	658	155.8
100	31.5	206	71.6	312	98.9	418	120.1	524	137.5	660	158.3
102	32.5	208	72.2	314	99.4	420	120.5	526	137.8	664	156.6
104	33.4	210	72.8	316	99.8	422	120.8	528	138.1	666	156.8
106	34.4	212	73.4	318	100.2	424	121.2	530	138.4	668	157.1
108	35.3	214	74.0	320	100.7	426	121.5	532	138.7	670	157.3
110	36.3	216	74.6	322	101.1	428	121.9	534	139.0	674	157.7
112	37.2	218	75.1	324	101.6	430	122.2	536	139.3	676	158.0
114	38.1	220	75.7	326	102.0	432	122.6	538	139.6	Critical Point	
116	39.0	222	76.3	328	102.4	434	122.9	540	139.9	705	163.0

Source: Allied Signal - Genetron for Windows version R1.0 © 1999

Table 9—R-22 Refrigerant Pressure Temperature Relationship

psig	°F	psig	°F	psig	°F	psig	°F	psig	°F	psig	°F	psig	°F
7	-25.9	71	41.7	135	76.2	199	101.1	263	120.9	327	137.5	391	152.0
8	-24.0	72	42.3	136	76.7	200	101.4	264	121.1	328	137.8	392	152.2
9	-22.1	73	43.0	137	77.1	201	101.7	265	121.4	329	138.0	393	152.4
10	-20.4	74	43.7	138	77.6	202	102.1	266	121.7	330	138.2	394	152.6
11	-18.7	75	44.3	139	78.0	203	102.4	267	122.0	331	138.5	395	152.8
12	-17.0	76	45.0	140	78.4	204	102.8	268	122.3	332	138.7	396	153.1
13	-15.4	77	45.6	141	78.9	205	103.1	269	122.5	333	139.0	397	153.3
14	-13.8	78	46.2	142	79.3	206	103.4	270	122.8	334	139.2	398	153.5
15	-12.3	79	46.9	143	79.7	207	103.8	271	123.1	335	139.4	399	153.7
16	-10.8	80	47.5	144	80.2	208	104.1	272	123.4	336	139.7	400	153.9
17	-9.3	81	48.1	145	80.6	209	104.4	273	123.6	337	139.9	401	154.1
18	-7.9	82	48.7	146	81.0	210	104.8	274	123.9	338	140.2	402	154.3
19	-6.5	83	49.4	147	81.4	211	105.1	275	124.2	339	140.4	403	154.5
20	-5.2	84	50.0	148	81.8	212	105.4	276	124.5	340	140.6	404	154.7
21	-3.9	85	50.6	149	82.3	213	105.7	277	124.7	341	140.9	405	154.9
22	-2.6	86	51.2	150	82.7	214	106.1	278	125.0	342	141.1	406	155.1
23	-1.3	87	51.8	151	83.1	215	106.4	279	125.3	343	141.3	407	155.3
24	0.0	88	52.4	152	83.5	216	106.7	280	125.5	344	141.6	408	155.6
25	1.2	89	52.9	153	83.9	217	107.0	281	125.8	345	141.8	409	155.8
26	2.4	90	53.5	154	84.3	218	107.4	282	126.1	346	142.0	410	156.0
27	3.6	91	54.1	155	84.7	219	107.7	283	126.4	347	142.3	411	156.2
28	4.7	92	54.7	156	85.1	220	108.0	284	126.6	348	142.5	412	156.4
29	5.8	93	55.2	157	85.5	221	108.3	285	126.9	349	142.7	413	156.6
30	6.9	94	55.8	158	85.9	222	108.6	286	127.2	350	142.9	414	156.8
31	8.0	95	56.4	159	86.3	223	108.9	287	127.4	351	143.2	415	157.0
32	9.1	96	56.9	160	86.7	224	109.3	288	127.7	352	143.4	416	157.2
33	10.2	97	57.5	161	87.1	225	109.6	289	127.9	353	143.6	417	157.4
34	11.2	98	58.0	162	87.5	226	109.9	290	128.2	354	143.9	418	157.6
35	12.2	99	58.6	163	87.9	227	110.2	291	128.5	355	144.1	419	157.8
36	13.2	100	59.1	164	88.3	228	110.5	292	128.7	356	144.3	420	158.0
37	14.2	101	59.7	165	88.7	229	110.8	293	129.0	357	144.5	421	158.2
38	15.2	102	60.2	166	89.1	230	111.1	294	129.3	358	144.8	422	158.4
39	16.2	103	60.7	167	89.5	231	111.4	295	129.5	359	145.0	423	158.6
40	17.1	104	61.3	168	89.9	232	111.8	296	129.8	360	145.2	424	158.8
41	18.1	105	61.8	169	90.2	233	112.1	297	130.0	361	145.4	425	159.0
42	19.0	106	62.3	170	90.6	234	112.4	298	130.3	362	145.7	426	159.2
43	19.9	107	62.8	171	91.0	235	112.7	299	130.6	363	145.9	427	159.4
44	20.8	108	63.3	172	91.4	236	113.0	300	130.8	364	146.1	428	159.6
45	21.7	109	63.9	173	91.8	237	113.3	301	131.1	365	146.3	429	159.8
46	22.6	110	64.4	174	92.1	238	113.6	302	131.3	366	146.6	430	160.0
47	23.5	111	64.9	175	92.5	239	113.9	303	131.6	367	146.8	431	160.2
48	24.3	112	65.4	176	92.9	240	114.2	304	131.8	368	147.0	432	160.4
49	25.2	113	65.9	177	93.2	241	114.5	305	132.1	369	147.2	433	160.6
50	26.0	114	66.4	178	93.6	242	114.8	306	132.3	370	147.5	434	160.8
51	26.8	115	66.9	179	94.0	243	115.1	307	132.6	371	147.7	435	161.0
52	27.6	116	67.4	180	94.3	244	115.4	308	132.8	372	147.9	436	161.2
53	28.4	117	67.9	181	94.7	245	115.7	309	133.1	373	148.1	437	161.4
54	29.2	118	68.4	182	95.1	246	116.0	310	133.3	374	148.3	438	161.6
55	30.0	119	68.8	183	95.4	247	116.3	311	133.6	375	148.6	439	161.8
56	30.8	120	69.3	184	95.8	248	116.6	312	133.8	376	148.8	440	162.0
57	31.6	121	69.8	185	96.2	249	116.8	313	134.1	377	149.0	441	162.2
58	32.4	122	70.3	186	96.5	250	117.1	314	134.3	378	149.2	442	162.3
59	33.1	123	70.7	187	96.9	251	117.4	315	134.6	379	149.4	443	162.5
60	33.9	124	71.2	188	97.2	252	117.7	316	134.8	380	149.6	444	162.7
61	34.6	125	71.7	189	97.6	253	118.0	317	135.1	381	149.9	445	162.9
62	35.4	126	72.2	190	97.9	254	118.3	318	135.3	382	150.1	446	163.1
63	36.1	127	72.6	191	98.3	255	118.6	319	135.6	383	150.3	447	163.3
64	36.8	128	73.1	192	98.6	256	118.9	320	135.8	384	150.5	448	163.5
65	37.5	129	73.5	193	99.0	257	119.2	321	136.1	385	150.7	449	163.7
66	38.2	130	74.0	194	99.3	258	119.4	322	136.3	386	150.9	450	163.9
67	38.9	131	74.5	195	99.7	259	119.7	323	136.6	387	151.1		
68	39.6	132	74.9	196	100.0	260	120.0	324	136.8	388	151.4	**Critical**	
69	40.3	133	75.4	197	100.4	261	120.3	325	137.0	389	151.6	709	205.1
70	41.0	134	75.8	198	100.7	262	120.6	326	137.3	390	151.8		

Table 10—Puron Subcooling Chart

Liquid Line Temperature (°F)											
Liq Press (psig)	P–T (°F)	Subcooling (°F)									
		2	4	6	8	10	12	14	16	18	20
200	70	68	66	64	62	60	58	56	54	52	50
210	73	71	69	67	65	63	61	59	57	55	53
220	76	74	72	70	68	66	64	62	60	58	56
230	79	77	75	73	71	69	67	65	63	61	59
240	82	80	78	76	74	72	70	68	66	64	62
250	84	82	80	78	76	74	72	70	68	66	64
260	87	85	83	81	79	77	75	73	71	69	67
270	89	87	85	83	81	79	77	75	73	71	69
280	92	90	88	86	84	82	80	78	76	74	72
290	94	92	90	88	86	84	82	80	78	76	74
300	96	94	92	90	88	86	84	82	80	78	76
310	99	97	95	93	91	89	87	85	83	81	79
320	101	99	97	95	93	91	89	87	85	83	81
330	103	101	99	97	95	93	91	89	87	85	83
340	105	103	101	99	97	95	93	91	89	87	85
350	107	105	103	101	99	97	95	93	91	89	87
360	109	107	105	103	101	99	97	95	93	91	89
370	111	109	107	105	103	101	99	97	95	93	91
380	113	111	109	107	105	103	101	99	97	95	93
390	115	113	111	109	107	105	103	101	99	97	95
400	117	115	113	111	109	107	105	103	101	99	97
410	119	117	115	113	111	109	107	105	103	101	99
420	121	119	117	115	113	111	109	107	105	103	101
430	122	120	118	116	114	112	110	108	106	104	102
440	124	122	120	118	116	114	112	110	108	106	104
450	126	124	122	120	118	116	114	112	110	108	106
460	127	125	123	121	119	117	115	113	111	109	107
470	129	127	125	123	121	119	117	115	113	111	109
480	131	129	127	125	123	121	119	117	115	113	111
490	132	130	128	126	124	122	120	118	116	114	112
500	134	132	130	128	126	124	122	120	118	116	114
510	135	133	131	129	127	125	123	121	119	117	115
520	137	135	133	131	129	127	125	123	121	119	117
530	139	137	135	133	131	129	127	125	123	121	119
540	140	138	136	134	132	130	128	126	124	122	120
550	141	139	137	135	133	131	129	127	125	123	121
560	143	141	139	137	135	133	131	129	127	125	123
570	144	142	140	138	136	134	132	130	128	126	124
580	146	144	142	140	138	136	134	132	130	128	126
590	147	145	143	141	139	137	135	133	131	129	127
600	149	147	145	143	141	139	137	135	133	131	129
610	150	148	146	144	142	140	138	136	134	132	130

Table 11—Puron Superheat Chart

Vapor Line Temperature (°F)																
Vap Press (psig)	P-T (°F)	Superheat (°F)														
		2	4	6	8	10	12	14	16	18	20	22	24	26	28	30
80	21	23	25	27	29	31	33	35	37	39	41	43	45	47	49	51
82	22	24	26	28	30	32	34	36	38	40	42	44	46	48	50	52
84	23	25	27	29	31	33	35	37	39	41	43	45	47	49	51	53
86	24	26	28	30	32	34	36	38	40	42	44	46	48	50	52	54
88	25	27	29	31	33	35	37	39	41	43	45	47	49	51	53	55
90	26	28	30	32	34	36	38	40	42	44	46	48	50	52	54	56
92	27	29	31	33	35	37	39	41	43	45	47	49	51	53	55	57
94	29	31	33	35	37	39	41	43	45	47	49	51	53	55	57	59
96	30	32	34	36	38	40	42	44	46	48	50	52	54	56	58	60
98	31	33	35	37	39	41	43	45	47	49	51	53	55	57	59	61
100	32	34	36	38	40	42	44	46	48	50	52	54	56	58	60	62
102	33	35	37	39	41	43	45	47	49	51	53	55	57	59	61	63
104	34	36	38	40	42	44	46	48	50	52	54	56	58	60	62	64
106	35	37	39	41	43	45	47	49	51	53	55	57	59	61	63	65
108	35	37	39	41	43	45	47	49	51	53	55	57	59	61	63	65
110	36	38	40	42	44	46	48	50	52	54	56	58	60	62	64	66
112	37	39	41	43	45	47	49	51	53	55	57	59	61	63	65	67
114	38	40	42	44	46	48	50	52	54	56	58	60	62	64	66	68
116	39	41	43	45	47	49	51	53	55	57	59	61	63	65	67	69
118	40	42	44	46	48	50	52	54	56	58	60	62	64	66	68	70
120	41	43	45	47	49	51	53	55	57	59	61	63	65	67	69	71
122	42	44	46	48	50	52	54	56	58	60	62	64	66	68	70	72
124	43	45	47	49	51	53	55	57	59	61	63	65	67	69	71	73
126	44	46	48	50	52	54	56	58	60	62	64	66	68	70	72	74
128	44	46	48	50	52	54	56	58	60	62	64	66	68	70	72	74
130	45	47	49	51	53	55	57	59	61	63	65	67	69	71	73	75
132	46	48	50	52	54	56	58	60	62	64	66	68	70	72	74	76
134	47	49	51	53	55	57	59	61	63	65	67	69	71	73	75	77
136	48	50	52	54	56	58	60	62	64	66	68	70	72	74	76	78
138	48	50	52	54	56	58	60	62	64	66	68	70	72	74	76	78
140	49	51	53	55	57	59	61	63	65	67	69	71	73	75	77	79
142	50	52	54	56	58	60	62	64	66	68	70	72	74	76	78	80
144	51	53	55	57	59	61	63	65	67	69	71	73	75	77	79	81
146	52	54	56	58	60	62	64	66	68	70	72	74	76	78	80	82
148	52	54	56	58	60	62	64	66	68	70	72	74	76	78	80	82
150	53	55	57	59	61	63	65	67	69	71	73	75	77	79	81	83
152	54	56	58	60	62	64	66	68	70	72	74	76	78	80	82	84
154	55	57	59	61	63	65	67	69	71	73	75	77	79	81	83	85
156	55	57	59	61	63	65	67	69	71	73	75	77	79	81	83	85
158	56	58	60	62	64	66	68	70	72	74	76	78	80	82	84	86
160	57	59	61	63	65	67	69	71	73	75	77	79	81	83	85	87
162	58	60	62	64	66	68	70	72	74	76	78	80	82	84	86	88

Table 12—R-22 Subcooling Chart

R−22 Liquid Line Temperature (°F)														
Liquid Pres (psig)	PT (°F)	Subcooling (°F)												
		2	4	6	8	10	12	14	16	18	20	22	24	26
120	70	68	66	64	62	60	58	56	54	52	50	48	46	44
125	72	70	68	66	64	62	60	58	56	54	52	50	48	46
130	74	72	70	68	66	64	62	60	58	56	54	52	50	48
135	76	74	72	70	68	66	64	62	60	58	56	54	52	50
140	79	77	75	73	71	69	67	65	63	61	59	57	55	53
145	81	79	77	75	73	71	69	67	65	63	61	59	57	55
150	83	81	79	77	75	73	71	69	67	65	63	61	59	57
155	85	83	81	79	77	75	73	71	69	67	65	63	61	59
160	87	85	83	81	79	77	75	73	71	69	67	65	63	61
165	89	87	85	83	81	79	77	75	73	71	69	67	65	63
170	91	89	87	85	83	81	79	77	75	73	71	69	67	65
175	93	91	89	87	85	83	81	79	77	75	73	71	69	67
180	95	93	91	89	87	85	83	81	79	77	75	73	71	69
185	96	94	92	90	88	86	84	82	80	78	76	74	72	70
190	98	96	94	92	90	88	86	84	82	80	78	76	74	72
195	100	98	96	94	92	90	88	86	84	82	80	78	76	74
200	102	100	98	96	94	92	90	88	86	84	82	80	78	76
205	103	101	99	97	95	93	91	89	87	85	83	81	79	77
210	105	103	101	99	97	95	93	91	89	87	85	83	81	79
215	107	105	103	101	99	97	95	93	91	89	87	85	83	81
220	108	106	104	102	100	98	96	94	92	90	88	86	84	82
225	110	108	106	104	102	100	98	96	94	92	90	88	86	84
230	111	109	107	105	103	101	99	97	95	93	91	89	87	85
235	113	111	109	107	105	103	101	99	97	95	93	91	89	87
240	114	112	110	108	106	104	102	100	98	96	94	92	90	88
245	116	114	112	110	108	106	104	102	100	98	96	94	92	90
250	117	115	113	111	109	107	105	103	101	99	97	95	93	91
255	119	117	115	113	111	109	107	105	103	101	99	97	95	93
260	120	118	116	114	112	110	108	106	104	102	100	98	96	94
265	121	119	117	115	113	111	109	107	105	103	101	99	97	95
270	123	121	119	117	115	113	111	109	107	105	103	101	99	97
275	124	122	120	118	116	114	112	110	108	106	104	102	100	98
280	126	124	122	120	118	116	114	112	110	108	106	104	102	100
285	127	125	123	121	119	117	115	113	111	109	107	105	103	101
290	128	126	124	122	120	118	116	114	112	110	108	106	104	102
295	129	127	125	123	121	119	117	115	113	111	109	107	105	103
300	131	129	127	125	123	121	119	117	115	113	111	109	107	105
305	132	130	128	126	124	122	120	118	116	114	112	110	108	106
310	133	131	129	127	125	123	121	119	117	115	113	111	109	107
315	135	133	131	129	127	125	123	121	119	117	115	113	111	109
320	136	134	132	130	128	126	124	122	120	118	116	114	112	110
325	137	135	133	131	129	127	125	123	121	119	117	115	113	111
330	138	136	134	132	130	128	126	124	122	120	118	116	114	112

Table 13—R-22 Superheat Chart

R−22 Vapor Line Temperature (°F)																
Vapor Press (psig)	PT (°F)	Superheat (°F)														
		2	4	6	8	10	12	14	16	18	20	22	24	26	28	30
50	26	28	30	32	34	36	38	40	42	44	46	48	50	52	54	56
51	27	29	31	33	35	37	39	41	43	45	47	49	51	53	55	57
52	28	30	32	34	36	38	40	42	44	46	48	50	52	54	56	58
53	28	30	32	34	36	38	40	42	44	46	48	50	52	54	56	58
54	29	31	33	35	37	39	41	43	45	47	49	51	53	55	57	59
55	30	32	34	36	38	40	42	44	46	48	50	52	54	56	58	60
56	31	33	35	37	39	41	43	45	47	49	51	53	55	57	59	61
57	32	34	36	38	40	42	44	46	48	50	52	54	56	58	60	62
58	32	34	36	38	40	42	44	46	48	50	52	54	56	58	60	62
59	33	35	37	39	41	43	45	47	49	51	53	55	57	59	61	63
60	34	36	38	40	42	44	46	48	50	52	54	56	58	60	62	64
61	35	37	39	41	43	45	47	49	51	53	55	57	59	61	63	65
62	35	37	39	41	43	45	47	49	51	53	55	57	59	61	63	65
63	36	38	40	42	44	46	48	50	52	54	56	58	60	62	64	66
64	37	39	41	43	45	47	49	51	53	55	57	59	61	63	65	67
65	38	40	42	44	46	48	50	52	54	56	58	60	62	64	66	68
66	38	40	42	44	46	48	50	52	54	56	58	60	62	64	66	68
67	39	41	43	45	47	49	51	53	55	57	59	61	63	65	67	69
68	40	42	44	46	48	50	52	54	56	58	60	62	64	66	68	70
69	40	42	44	46	48	50	52	54	56	58	60	62	64	66	68	70
70	41	43	45	47	49	51	53	55	57	59	61	63	65	67	69	71
71	42	44	46	48	50	52	54	56	58	60	62	64	66	68	70	72
72	42	44	46	48	50	52	54	56	58	60	62	64	66	68	70	72
73	43	45	47	49	51	53	55	57	59	61	63	65	67	69	71	73
74	44	46	48	50	52	54	56	58	60	62	64	66	68	70	72	74
75	44	46	48	50	52	54	56	58	60	62	64	66	68	70	72	74
76	45	47	49	51	53	55	57	59	61	63	65	67	69	71	73	75
77	46	48	50	52	54	56	58	60	62	64	66	68	70	72	74	76
78	46	48	50	52	54	56	58	60	62	64	66	68	70	72	74	76
79	47	49	51	53	55	57	59	61	63	65	67	69	71	73	75	77
80	48	50	52	54	56	58	60	62	64	66	68	70	72	74	76	78
81	48	50	52	54	56	58	60	62	64	66	68	70	72	74	76	78
82	49	51	53	55	57	59	61	63	65	67	69	71	73	75	77	79
83	50	52	54	56	58	60	62	64	66	68	70	72	74	76	78	80
84	50	52	54	56	58	60	62	64	66	68	70	72	74	76	78	80
85	51	53	55	57	59	61	63	65	67	69	71	73	75	77	79	81
86	51	53	55	57	59	61	63	65	67	69	71	73	75	77	79	81
87	52	54	56	58	60	62	64	66	68	70	72	74	76	78	80	82
88	53	55	57	59	61	63	65	67	69	71	73	75	77	79	81	83
89	53	55	57	59	61	63	65	67	69	71	73	75	77	79	81	83
90	54	56	58	60	62	64	66	68	70	72	74	76	78	80	82	84
91	54	56	58	60	62	64	66	68	70	72	74	76	78	80	82	84
92	55	57	59	61	63	65	67	69	71	73	75	77	79	81	83	85

TWO-STAGE 286B / 289B/180B / 187B

Application Guidelines

Bryant designed and tested the two-stage air conditioner and heat pump products with Puron refrigerant to operate at a minimum outdoor operating ambient in cooling mode at 55°F without low ambient cooling enabled and the maximum outdoor operating ambient in cooling is 125°F/51.6°C. On Evolution communicating systems, only low ambient cooling is available to 0°F/-17.8°C.

The maximum outdoor operating ambient in heating mode is 66°F/18.8°C on all heat pumps. Continuous operation in heating mode is approved to -30°F/-34.4°C. Thermostat options for the two stage units are as follows:

- A,B,C,D four-wire connections for Evolution User Interface.
- R,C,W,Y1,Y2, and O wire connections for standard, non-communicating thermostat.

286B, 289B, 187B, and 180B units can run, and are matched with, User Interface (UI) communicating and non-communicating indoor fan coils and furnaces. Only unit combinations listed in the two-stage Product Data are recommended.

Line sets for two stage units are similar to the single stage units. However, some restrictions may apply to specific combinations in long line applications. Refer to the *Long Line Guideline* for further information.

The Tennessee Valley Authority (TVA) requires that electric strip heat have a lockout feature. This is achieved through Bryant thermostats required per above and must be used on all TVA approved units.

The new control board in the two stage units with Puron refrigerant has dip switches for defrost timing. The Evolution controls provide these two stage units with high stage latching and Hybrid Heat™ (dual fuel) capabilities. The standard Hybrid Heat™ (duel fuel) thermostat can be used on two stage units with Bristol reciprocating compressors only.

Model Plug

Each control board contains a model plug. The correct model plug must be installed in order for the system to operate properly. (See Table 14.)

The model plug is used to identify the type and size of unit to the control. On 286B models, the model plug is also used to determine the start sequence timing for each individual model.

On new units, the model and serial numbers are inputted into the board's memory at the factory. If a model plug is lost or missing at initial installation, the unit will operate according to the information input at the factory and the appropriate error code will flash temporarily. An RCD replacement board contains no model and serial information. If the factory control board fails, the model plug must be transferred from the original board to the replacement board for the unit to operate.

NOTE: The model plug takes priority over factory model information input at the factory. If the model plug is removed after initial power up, the unit will operate according to the last valid model plug installed, and flash the appropriate fault code temporarily.

Table 14—Model Plug Information

MODEL NUMBER	MODEL PLUG NUMBER	PIN RESISTANCE (K–ohms)	
		Pins 1–4	Pins 2–3
286B024	HK70EZ041	18	91
286B036	HK70EZ043	18	150
286B048	HK70EZ045	18	220
286B060	HK70EZ047	18	360
289B024	HK70EZ010	5.1	120
289B036	HK70EZ012	5.1	180
289B048	HK70EZ014	5.1	270
289B060	HK70EZ016	11	5.1
180B024	HK70EZ009	5.1	91
180B036	HK70EZ011	5.1	150
180B048	HK70EZ013	5.1	220
180B060	HK70EZ015	5.1	360
187B024	HK70EZ040	18	75
187B036	HK70EZ042	18	120
187B048	HK70EZ044	18	180
187B060	HK70EZ046	18	270

Airflow Selections for 187B / 286B / 180B /289B Using Non-Communicating (Non-Evolution) Thermostats

Airflow Selection for 58CVA/58MVB Furnaces

The 58CVA/58MVB variable-speed furnaces provide high-and low-stage blower operation to match the capacities of the compressor at high and low stages. To select the recommended airflow and for adjustments to the manual switches labeled SW1-5, AC, and CF on the control board, refer to the furnace Installation Instructions. The 58CVA/58MVB utilizes a control center that allows the installing technician to select the proper airflows. The HP switch determines the airflow during high-stage compressor operation. Airflow for high- and low-stage can be calculated at either 350 CFM per ton or 400 CFM per ton, based on the positions of SW1-5.

When using communicating (Evolution) control, dipswitch adjustments are not necessary on furnaces. Airflows are determined by Evolution Control setup.

Airflow Selection for FV4 Fan Coils for 180B, 187B, 286B, 289B Using Non-Communicating (Non-Evolution) Thermostats

The FV4 provides high- and low-stage blower operation to match the capacities of compressor at high- and low-stage. To select recommended airflow, refer to FV4 Installation Instructions. The FV4 utilizes an Easy Select control board that allows the installing technician to select proper airflows. For adjustments to control board, select appropriate HP SIZE and CFM ADJUST setting. This fan coil has an adjustable blower off delay factory set at 90 sec for high- and low-stage blower operation.

For other combinations of equipment consult Product Data Digest.

GENERAL INFORMATION

Low Ambient Cooling

When this unit is operating below 55°F outdoor temperature, provisions must be made for low ambient operation.

Evolution Controlled low ambient cooling:

This unit is capable of low ambient cooling without a kit ONLY when using Evolution control. A low ambient kit is not required, and the outdoor fan motor does not need to be replaced for Evolution controlled low ambient operation. The Evolution Control provides an automatic evaporator coil freeze protection algorithm that eliminates the need for an evaporator freeze thermostat. Low ambient cooling must be enabled in the User Interface set up. Fan may not begin to cycle until about 40°F OAT. Fan will cycle based on coil and outdoor air temperature.

Evolution controlled low ambient mode operates as follows:

- Fan is OFF when outdoor coil temp is < (outdoor air temperature + 3°F) or outdoor fan has been ON for 30 minutes. (Fan is turned off to allow refrigerant system to stabilize.)
- Fan is ON when outdoor coil temp > (outdoor air temperature + 25°F) or outdoor coil temp > 80°F or if outdoor fan has been OFF for 30 minutes. (Fan is turned on to allow refrigerant system to stabilize.)
- Low pressure switch is ignored for first 3 minutes during low ambient start up. After 3 minutes, if LPS trips, then outdoor fan motor is turned off for 10 minutes, with the compressor running. If LPS closes within 10 minutes then cooling continues with the outdoor fan cycling per the coil temperature routine listed above for the remainder of the cooling cycle. If the LPS does not close within 10 minutes, then the normal LPS trip response (shut down cooling operation and generate LPS trip error) will occur.

For 180B/289B models, the PWM output for both high and low stage equals the value for low stage operation below 55°F.

Defrost

This control offers 5 possible defrost interval times: 30, 60, 90, 120 minutes, or AUTO.

With non-communicating thermostats, these are selected by dip switches on the unit control board. With communicating thermostats, the Evolution Control User Interface. The Evolution Control selection overrides the control board dip switch settings.

AUTO defrost adjusts the defrost interval time based on the last defrost time as follows:

- When defrost time <3 minutes, the next defrost interval=120 minutes.
- When defrost time 3-5 minutes, the next defrost interval=90 minutes.
- When defrost time 5-7 minutes, the next defrost interval=60 minutes.
- When defrost time >7 minutes, the next defrost interval=30 minutes.

The control board accumulates compressor run time. As the accumulated run time approaches the selected defrost interval time, the control board monitors the coil temperature sensor for a defrost demand. If a defrost demand exists, a defrost cycle will be initiated at the end of the selected time interval. A defrost demand exists when the coil temperature is at or below 32°F for 4 minutes during the interval.

The defrost cycle is terminated when the coil temperature reaches 65°F or 10 minutes has passed.

On 286B models, defrost will occur in low- or high-stage as demanded by the thermostat or User Interface regardless of OAT

On 289B models, when OAT is >25°F (-3.9°C), defrost will occur in low- or high-stage as demanded by the thermostat or User Interface.

On 289B models, if OAT is ≤25°F (-3.9°C), defrost will occur in high-stage only, regardless of thermostat or User Interface demand, and will terminate at 50°F (10°C) coil temperature with a minimum of 2.5 minutes in defrost.

If the coil temperature does not reach 32°F (0°C) within the interval, the interval timer will be reset and start over.

- Upon initial power up the first defrost interval is defaulted to 30 minutes. Remaining intervals are at selected times.
- Defrost is only allowed to occur below 50°F (10°C) outdoor ambient temperature.

The outdoor fan output (ODF) will remain off for 20 seconds after termination. This delay will allow time for the system to capture the heat from the outdoor coil and reduce the “steam cloud” effect that may occur on transition from defrost to the heating cycle. The outdoor fan output OFF delay of 20 seconds may be defeated to enable the fan to energize immediately at the time of termination and 12 seconds prior to the reversing valve de-energizing, through the User Interface setup screen available with SYSTXCCUID01-V UI, or forced defrost pins as follows:

- The ODF fan delay defeat can be toggled by shorting the forced defrost pins for >15 seconds while in the standby mode (status LED on solid). The LED will start to flash when the toggle has taken place.
- Status code 4 shows the fan delay defeat is active (no delay)
- Status code 3 shows that it is not active (20 second delay)

The code will continue to be displayed until after the short is removed. Once the short is removed, there is a 5 second wait before the code is cancelled. The code that is flashing will finish before going back to sold LED. the control is shipped with the ODF fan delay defeat NOT active. the change in status is remembered until toggled to a new status. A power down / power up sequence will not reset the status. It may be necessary to do the toggle twice to cycle to the desired state of defeat.

Defrost Hold

in a non-communicating system, if the thermostat becomes satisfied (Y1 or Y1 and Y2) before the defrost cycle is terminated, the control will "hold" in defrost mode and finish the defrost cycle on the next call for heat.

With communicating Evolution Control, defrost hold is not needed in a communicating system because the User Interface will complete the defrost cycle before shutting down the system.

Forced Defrost

With non-communicating (non-Evolution) control, forced defrost can be initiated by manually shorting the 2-pin header labeled FORCED DEFROST (see Fig 36) on the control board for 5 seconds then releasing.

With communicating (Evolution) control, forced defrost is initiated with the User Interface.

On all models, during a Forced Defrost:

- If coil temperature is at defrost temperature of 32°F, and outdoor air temperature is below 50°F, a full defrost sequence will occur.
- If coil temperature or outdoor air temperature does not meet the above requirements, an abbreviated 30 second defrost will occur.
- Both Quiet Shift and Quiet Shift-2 compressor ON/OFF delays will be included in a forced defrost if either are enabled.

Quiet Shift

Quiet Shift is a field-selectable defrost mode which may eliminate occasional noise that could be heard at the start of the defrost cycle and restarting of the heating cycle. On models with a non-communicating system, this feature must be enabled by selecting the 3rd position of the 3-position dip switch. For models with communicating (Evolution) systems, it must be enabled at the User Interface. When activated, the following sequence of operation will occur. Reversing valve will energize and compressor will turn off for 30 seconds, then turn back on to complete defrost. At the end of the defrost cycle, the reversing valve de-energizes, compressor will turn off for another 30 seconds, and the fan will turn off for 40 seconds, before starting in the heating mode.

Quiet Shift-2 (communicating models) (part # HK38EA016, HK38EA022, HK38EA023)

Quiet Shift-2 is a field selectable defrost mode which may eliminate occasional noise that could be heard at the start and finish of the defrost cycle.

On a non-communicating system, this feature must be enabled by selecting the 3rd position of the 3-position dip switch on the outdoor control board. For communicating systems, it must be enabled at the User Interface. When activated, the following sequence of operation occurs:

Defrost Initiation – The compressor is de-energized for 70 seconds. During this 70 second compressor off time, the reversing valve will be energized. Once the 70 second compressor off time has been reached, the compressor will be energized then the outdoor fan will be de-energized at which time the normal defrost cycle begins.

Defrost Termination – the outdoor fan will be energized shortly before the compressor is de-energized for 60 seconds. During the compressor 60 second off time, the reversing valve will be de-energized. Once the 60 second compressor off time has been completed, the compressor will be energized at which time the system will be in normal heat mode.

Liquid-Line Solenoid Accessory

In heat pump long-line applications, a liquid-line solenoid is required to control refrigerant migration in the heating mode. The solenoid should be installed near the outdoor unit with the arrow facing the outdoor unit. This is the direction of flow control. See application manual for long-line application details.

Accessory Liquid Solenoid with Evolution Communicating Control:

When using the Evolution Control, the liquid-line solenoid output is provided at the Y1 connection. Connect the solenoid as shown in the wiring label diagram. This is a 24vac output that is energized whenever the compressor is energized. It closes, in the compressor off mode, to prevent refrigerant migration into the unit through the liquid-line.

On Models with Accessory Liquid Solenoid Using a Non-Communicating Thermostat:

The liquid solenoid is connect to the Y1 and C terminal connections. The liquid solenoid closes, in the compressor off mode, to prevent refrigerant migration into the unit through the liquid-line.

CHECK CHARGE

All 286B units must be charged in high stage only.

Factory charge amount and desired subcooling are shown on unit rating plate. Charging method is shown on information plate inside unit. To properly check or adjust charge, conditions must be favorable for subcooling charging. Favorable conditions exist when the outdoor temperature is between 70°F and 100°F (21.11°C and 37.78°C), and the indoor temperature is between 70°F and 80°F (21.11°C and 26.67°C). Follow the procedure below:

Unit is factory charged for 15ft (4.57 m) of lineset. Adjust charge by adding or removing 0.6 oz/ft of 3/8 liquid line above or below 15ft (4.57 m) respectively.

For standard refrigerant line lengths (80 ft/24.38 m or less), allow system to operate in cooling mode at least 15 minutes. If conditions are favorable, check system charge by subcooling method. If any adjustment is necessary, adjust charge slowly and allow system to operate for 15 minutes to stabilize before declaring a properly charged system.

If the indoor temperature is above 80°F (26.67°C), and the outdoor temperature is in the favorable range, adjust system charge by weight based on line length and allow the indoor temperature to drop to 80°F (26.67°C) before attempting to check system charge by subcooling method as described above.

If the indoor temperature is below 70°F (21.11°C), or the outdoor temperature is not in the favorable range, adjust charge for line set length above or below 15ft (4.57 m) only. Charge level should then be appropriate for the system to achieve rated capacity. The charge level could then be checked at another time when the both indoor and outdoor temperatures are in a more favorable range.

NOTE: If line length is beyond 80 ft (24.38 m) or greater than 20 ft (6.10 m) vertical separation, See Long Line Guideline for special charging requirements.

Heating Check Chart Procedure

To check system operation during heating cycle, refer to the Heat Pump Charging Instructions label on outdoor unit. This chart indicates whether a correct relationship exists between system operating pressure and air temperature entering indoor and outdoor units. If pressure and temperature do not match on chart, system

refrigerant charge may not be correct. Do not use chart to adjust refrigerant charge.

NOTE: In heating mode, check refrigerant charge only when pressures are stable. If in doubt, remove charge and weigh in correct refrigerant charge.

NOTE: When charging is necessary during heating season, charge must be weighed in accordance with unit rating plate, ±0.6 oz./ft. of 3/8-in. liquid-line above or below 15 ft., respectively.

EXAMPLE:

To calculate additional charge required for a 25-ft. line set:
25 ft. - 15 ft. = 10 ft. X 0.6 oz./ft. = 6 oz. of additional charge.

SYSTEM FUNCTIONS AND SEQUENCE OF OPERATION (286B / 289B/180B / 187B)

The outdoor unit control system has special functions. The following is an overview of the two-stage control functions:

Cooling and Heating Operation

The 286B/187B/289B/180B model utilizes either a standard 2-stage indoor thermostat or Evolution Communication User Interface. With a call for first stage cooling, the outdoor fan, reversing valve, and low stage compressor are energized. If low-stage cannot satisfy cooling demand, high-stage cooling is energized by the second stage of indoor thermostat or User Interface. After second stage is satisfied, the unit returns to low-stage operation until first stage is satisfied or until second stage is required again. When both first stage and second stage cooling are satisfied, the compressor will shut off. The reversing valve will remain energized until the control board power is removed or a call for heating in initiated. With a call for heating, the outdoor fan and compressor are energized. The compressor will operate in high or low stage operation, as needed to meet the heating demand. When the heating demand is satisfied, the compressor and fan will shut off. The reversing valve is de-energized in the heating mode.

NOTE: When two-stage unit is operating at low-stage, system vapor (suction) pressure will be higher than a standard single-stage system or high-stage operation.

NOTE: Outdoor fan motor will continue to operate for one minute after compressor shuts off, when outdoor ambient is greater than or equal to 100°F. This reduces pressure differential for easier starting on next cycle.

NOTE: If unit has not operated within the past 12 hours, or following a unit power-up, upon the next thermostat high- or low-stage demand, unit operates for a minimum of 5 minutes in high-stage.

On models with non-communicating (non-Evolution) systems, with first stage of cooling, Y1 and O are powered on; and with second stage of cooling, Y1, Y2, and O are on. For these systems, with first stage of heating Y1 is on and for second stage of heating, Y1 and Y2 are on. When the reversing valve is energized, O is powered on.

Communication and Status Function Lights For Evolution Control only, Green communications (COMM) Light

A green LED (**COMM light**) on the outdoor board indicates successful communication with the other system products. The green LED will remain OFF until communication is established. Once a valid command is received, the green LED will turn ON continuously. If no communication is received within 2 minutes, the LED will be turned OFF until the next valid communication.

Amber Status Light

An amber colored **STATUS light** is used to display the operation mode and fault codes as specified in the troubleshooting section. See Table 17 for codes and definitions.

NOTE: Only one code will be displayed on the outdoor unit control board (the most recent, with the highest priority).

Utility Interface With Evolution Control

The utility curtailment relay should be wired between R and Y2 connections on the control board for Evolution Communicating Systems only (see Fig. 36.) This input allows a power utility device to interrupt compressor operation during peak load periods. When the utility sends a signal to shut the system down, the User Interface will display, “Curtailment Active”.

Compressor Operation

The basic scroll design has been modified with the addition of an internal unloading mechanism that opens a bypass port in the first compression pocket, effectively reducing the displacement of the scroll. The opening and closing of the bypass port is controlled by an internal electrically operated solenoid.

The modulated scroll uses a single step of unloading to go from full capacity to approximately 67% capacity. A single speed, high efficiency motor continues to run while the scroll modulates between the two capacity steps. Modulation is achieved by venting a portion of the gas in the first suction pocket back to the low side of the compressor, thereby reducing the effective displacement of the compressor. Full capacity is achieved by blocking these vents, thus increasing the displacement to 100%. A DC solenoid in the compressor controlled by a rectified 24 volt AC signal in the external solenoid plug moves the slider ring that covers and uncovers these vents. The vent covers are arranged in such a manner that the compressor operates at approximately 67% capacity when the solenoid is not energized and 100% capacity when the solenoid is energized.

The loading and unloading of the two step scroll is done “on the fly” without shutting off the motor between steps.

NOTE: 67% compressor capacity translates to approximately 80% cooling or heating capacity at the indoor coil. The compressor will always start unloaded and stay unloaded for five seconds even when the thermostat is calling for high stage.

Fan Motor

Fan motor rotates the fan blade that either draws or blows air through outdoor coil to exchange heat between refrigerant and air. Motors are totally enclosed to increase reliability. This also eliminates need for rain shield.

⚠ WARNING

ELECTRICAL SHOCK HAZARD

Failure to follow this warning could result in personal injury or death.

Turn off all power to unit before servicing or replacing fan motor. Be sure unit main power switch is turned off.

The bearings are permanently lubricated; therefore, no oil ports are provided.

For suspected electrical failures, check for loose or faulty electrical connections, or defective fan-motor capacitor. Fan motor is equipped with thermal overload device in motor windings which may open under adverse operating conditions. Allow time for motor to cool so device can reset. Further checking of motor can be done with an ohmmeter. Set scale on R X 1 position; check for continuity between three leads. Replace motors that show an open circuit in any of the windings. Place 1 lead of ohmmeter on each motor lead. At same time, place other ohmmeter lead on motor case (ground). Replace any motor that shows resistance to ground, signs of arcing, burning, or overheating.

Located above the compressor is a single-speed fan motor and fan. The 180B/289B air conditioner and heat pump models use the ECM variable speed fan motor.

The outdoor Integral Control Motor (ECM), is a variable-speed motor which operates from 450 to 850 rpm. The motor is a dc permanent magnet-type motor with the electronic controls integrated into its rear cover. The control package includes a small diode bridge, capacitors, and power switching devices. It converts ac to dc power and switches the dc power to the motor windings on and off at various rates to control the motor speed. The speed at which the motor windings are thus commutated is determined by a pulse width modulated (PWM) signal which is received from the control board on the motor control lines.

The PWM signal is created by turning a DC signal on and off once within a given period of time. The signal on time relative to the signal total period defines the percent of the PWM. For example, if the period is 5 sec and the control power is turned on for 1 sec then off, the signal will remain off for 4 sec before turning on again to start the next cycle. The PWM is called a 20 percent duty cycle signal. If the on time is increased to 4 sec of the 5 sec period, the PWM is called an 80 percent duty cycle. The ECM reads the PWM signal and increases the motor speed linearly from minimum speed to maximum speed with the percent duty cycle value of the supplied PWM signal.

Outdoor Fan Motor Operation

There are two different types of motors used in the Evolution 2-stage outdoor units. The 286B models use a PSC type fan motor, and the speed does not change between high and low speed operation.

On 289B models, an ECM fan motor is used to achieve higher efficiency ratings of the system. The outdoor unit control energizes outdoor fan anytime compressor is operating, except for defrost or low-ambient cooling. The outdoor fan remains energized if a pressure switch or compressor overload should open. The outdoor fan motor will continue to operate for one minute after the compressor shuts off when the outdoor ambient is greater than or equal to 100°F/37.7°C. This reduces pressure differential for easier starting on next cycle. On 286B/187B models, the outdoor fan remains energized during the 1-minute compressor staging time delay.

On 286B/187B models, the outdoor fan motor is a PSC type. A fan relay on the control board turns the fan off and on by opening and closing a high voltage circuit to the motor. It does not change speeds between low and high stage operation.

On 289B/180B models, the outdoor fan is an ECM type. The motor control is continuously powered with high voltage. The motor speed is determined by electrical pulses provided by the PWM outputs on the control board. The ECM motor RPM adjusts to outdoor conditions as described in Table 15. The PWM output can be measured with a volt meter set to DC volts.

In low ambient cooling (below 55°F/12.7°C), the control board cycles the fan off and on.

Table 15—Outdoor Fan Motor PWM
Outdoor Temp (DC volts, Tolerance +/- 2%)

Model	Low Stage (OAT≤104°F / 40°C)	High Stage (OAT≤104°F / 40°C)	Low & High Stage (OAT>104°F / 40°C)
289B024	8.72	9.35	11.90
289B036	9.06	10.23	11.90
289B048	9.91	11.04	11.90
289B060	10.83	11.70	11.90
180B024	9.57	10.88	11.90
180B036	9.06	10.23	11.90
180B048	9.91	11.04	11.90
180B060	10.83	11.70	11.90

NOTE: For 289B models in low–ambient cooling, the PWM output for both high– and low–stage equals the value for low–stage operation below 55°F (12.8°C).

ECM Fan Motor Troubleshooting

If the outdoor fan motor fails to start and run:

- Check the high-voltage supply. The unit need not be running to check high voltage, but the power must be on.
- If the 230vac is present, use Table 15 to check for proper control voltage output to the fan motor from the control board. The control board sends DC voltage signals to the motor through the terminals labeled PWM1 and PWM2 Set a voltmeter on a DC voltage scale and check across these terminals.
- First check voltage with the motor disconnected. If no control voltage is present, check control-board connections. If connections are good, replace the control board.
- If voltage is present, reconnect the motor and check again. Shut down the unit to reconnect the motor and restart the unit to complete this troubleshooting procedure. If control voltage is no longer present or motor fails to respond, check motor connections.
- If connections are good, replace the motor.
- The motor should run at full rpm with a 24 VAC power supplied to the low voltage PWM signal wires. Disconnect the PWM wires from the control board before supplying the 24 VAC to the motor.

Time Delays

The unit time delays include:

- Five minute time delay to start cooling or heating operation when there is a call from the thermostat or user interface. To bypass this feature, momentarily short and release Forced Defrost pins.
- Five minute compressor re-cycle delay on return from a brown-out condition.
- Two minute time delay to return to standby operation from last valid communication (with Evolution only).
- One minute time delay of outdoor fan at termination of cooling mode when outdoor ambient is greater than or equal to 100°F.
- Fifteen second delay at termination of defrost before the auxiliary heat (W1) is de-energized.
- Twenty second delay at termination of defrost before the outdoor fan is energized.
- Thirty second compressor delay when quiet shift enabled.
- Seventy and sixty second compressor delays when Quiet Shift-2 is enabled.
- On 226A, 286B models there is a 1 minute time delay between staging from low to high and from high to low capacity. On 289B models there is no delay; the compressor will change from low to high and from high to low capacity “on the fly” to meet the demand.

Pressure Switches

The Puron® two-stage air conditioner contains two pressure switches to prevent system operation if the pressures get excessively high or low. The air conditioner low pressure switch in the suction line opens at 50 PSI and closes at 95 PSI. The high pressure switch opens at 670 PSI and closes at 470 PSI. Both pressure switch settings are considerably higher than on comparably sized R-22 units. The high and low pressure switches can be identified by their pink stripe on the switch's electrical wires.

The Puron® two-stage heat pump contains a loss of charge switch in the suction line on 286B and 289B, and liquid line on 226A which opens at 23 PSI and closes at 55 PSI. See troubleshooting section for sequence when a pressure switch trip occurs.

Muffler, Accumulator, Reversing Valve (RVS)

The Puron® two-stage air conditioners and heat pumps have a compressor discharge line muffler, to dampen sound pressure pulsations.

The Puron® two-stage heat pumps have a specifically designed reversing valve, for Puron® application and an accumulator for storing excess liquid refrigerant during the heating mode to prevent damaging flood-back.

Thermistors

Outdoor Ambient Thermistor

The Puron® two-speed air conditioner and heat pump units have an outdoor ambient air thermistor. The control board must know the outdoor air temperature so it can activate various functions. These functions include:

- Activating the compressor crankcase heater when ever the outdoor unit is in the off cycle.
- The fan motor speed changes for both air conditioner and heat pump on the ECM equipped units.

Outdoor Coil Thermistor (OCT)

The coil or defrost thermistor is the same thermistor used to monitor outdoor air temperature. The control board must know the coil temperature so it can activate various functions. These functions include:

- Frost sensing on heat pumps
- Coil-vs-Ambient temperature relationship
- Low ambient cooling operation

Thermistor Curve

The resistance vs. temperature chart enables the service technicians to check thermistor resistance, regardless of the temperature.

For example, at a 60°F temperature, thermistor resistance should be around 16,000 Ohms. (See Fig. 34.)

We will talk about the thermistor in more detail when we review the control board fault codes.

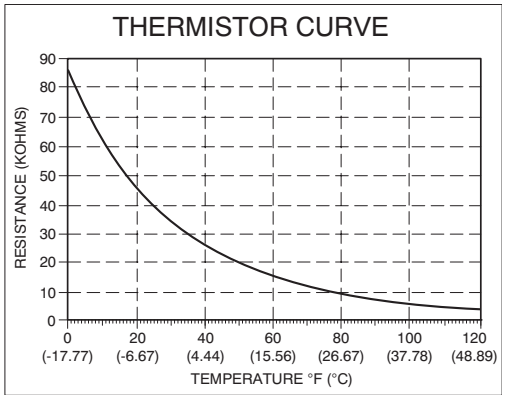

A08054

Fig. 34 – Resistance Values Versus Temperature

Control Box

Contactor And Capacitor

Removal of the information plate exposes the control components. Both air conditioner and heat pump control boxes will appear to be nearly identical. There are two contactors, two capacitors, a control board and a compressor start assist. The contactors are identical to those used in the standard single speed units. One controls low capacity operation and the second controls high speed. The capacitors also are similar to those used in standard single speed units. You have a fan capacitor for the outdoor fan motor, and a run capacitor for the compressor motor. The control board, start capacitor, and start relay control the starting of the compressor.

Always replace these devices with the Factory Approved Components.

Incoming Power

Incoming power is attached to the two power wire stripped leads. A ground lug is also provided. Outdoor unit should always be grounded through the ground lug to the unit disconnect and from the disconnect to the electrical fuse box. Failure to do so can cause serious injury or death.

- First check that the model plug is correct for the unit model and size, and that it is installed properly

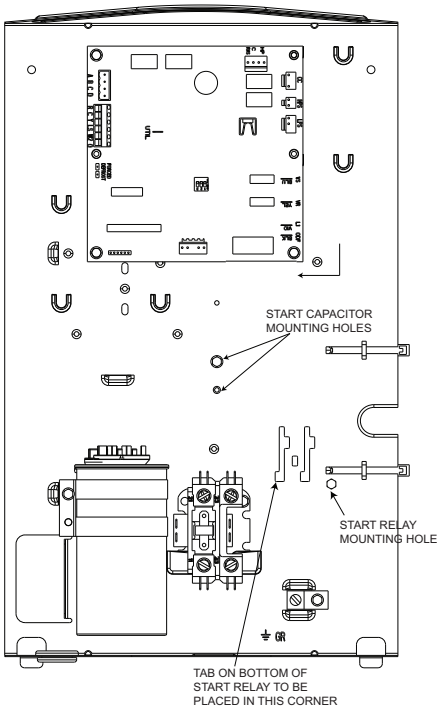

A10157

Fig. 35 – Start Relay and Capacitor Mounting Locations Evolution in Cube Cabinet

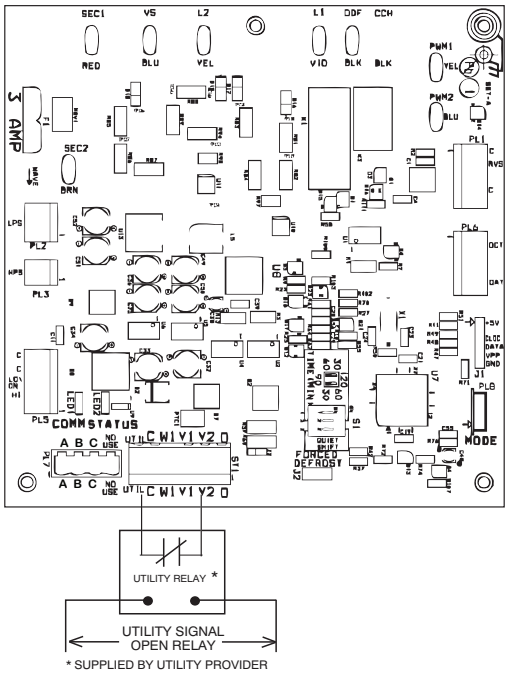

A12260

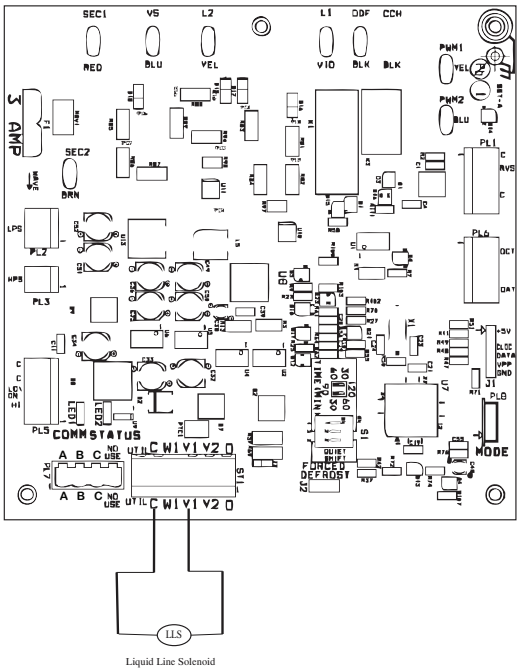

A12261

Fig. 36 – 2-Stage Control Board

TROUBLESHOOTING

Troubleshooting circuit board HK38EA016, 022, 023

The Evolution Series outdoor units all use the same control board. A model plug is used to identify the system type, and set the operating parameters for airflow, start circuit timing etc. (see Model Plug section)

Replacement boards may have a different part number from the original board. A newer board will always be backward compatible to previous units if it is superseded at RCD. Old boards are not always forward compatible due to new functions, or software changes made to resolve field issues.

Systems Communication Failure

If communication with the Evolution control is lost with the User Interface, the control will flash the appropriate fault code. (See Table 17.) Check the wiring to the UI and the indoor and outdoor units.

Model Plug

Each control board contains a model plug. The correct model plug must be installed for or the system to operate properly. (See Table 14.)

The model plug is used to identify the type and size of unit to the control. On 286B models, the model plug is also used to determine the start sequence timing for each individual model.

On new units, the model and serial numbers are input into the board's memory at the factory. If a model plug is lost or missing at initial installation, the unit will operate according to the information input at the factory and the appropriate error code will flash temporarily. An RCD replacement board contains no model and serial information. If the factory control board fails, the model plug must be transferred from the original board to the replacement board for the unit to operate.

NOTE: The model plug takes priority over factory model information input at the factory. If the model plug is removed after initial power up, the unit will operate according to the last valid model plug installed, and flash the appropriate fault code temporarily.

Pressure Switch Protection

The outdoor unit is equipped with high- and low-pressure switches. If the control senses the opening of a high- or low-pressure switch, it will respond as follows:

1. De-energize the appropriate compressor contactor.
2. Keep the outdoor fan operating for 15 minutes.
3. Display the appropriate fault code (see Table 17).
4. After a 15 minute delay, if there is a call for cooling or heating and LPS or HPS is reset, the appropriate compressor contactor is energized.
5. If LPS or HPS has not closed after a 15 minute delay, the outdoor fan is turned off. If the open switch closes anytime after the 15 minute delay, then resume operation with a call for cooling or heating.
6. If LPS or HPS trips 3 consecutive cycles, the unit operation is locked out for 4 hours.
7. In the event of a high-pressure switch trip or high-pressure lockout, check the refrigerant charge, outdoor fan operation, and outdoor coil (in cooling) for airflow restrictions, or indoor airflow in heating.
8. In the event of a low-pressure switch trip or low-pressure lockout, check the refrigerant charge and indoor airflow (cooling) and outdoor fan operation and outdoor coil in heating.

Control Fault

If the outdoor unit control board has failed, the control will flash the appropriate fault code (see Table 17). The control board should be replaced.

Brown-Out Protection

If the line voltage is less than 187v for at least 4 seconds, the appropriate compressor contactor and fan relay are de-energized. Compressor and fan operation are not allowed until voltage is a minimum of 190v. The control will flash the appropriate fault code (see Table 17).

230v Brown-Out Protection Defeated

The brownout feature can be defeated if needed for severe noisy power conditions. This defeat should always be a last resort to solving the problem. Defeat is available on the User Interface setup screen (available with SYSTXBBUID01-C UI) or can be initiated through the forced defrost pins for non-communicating systems as follows:

The brownout toggle is accomplished by shorting the defrost pins from power up with the OAT and OCT sensor connector removed. After 3 seconds, the status of the force defrost short and the OAT/OCT as open will be checked. If correct, then the brownout will be toggled.

- Status code 6 shows the brownout is disabled.
- Status code 5 shows the brownout is active.

After the brownout defeat is set, power down and reinstall the OAT/OCT sensor and remove the short from the forced defrost pins. As long as the short on the forced defrost remains, the OAT and OCT faults will not be cleared. The code will continue to be flashed.

The control is shipped with the brownout active. The change in status is remembered until toggled to a new status. A power down/power up sequence will not reset the status. It may be necessary to do the toggle twice to cycle to the desired state of the defeat.

230V Line (Power Disconnect) Detection

If there is no 230v at the compressor contactor(s) when the indoor unit is powered and cooling or heating demand exists, the appropriate fault code is displayed. Verify the disconnect is closed and 230v wiring is connected to the unit.

Compressor Voltage Sensing

The control board input terminals labeled VS, and L2 on 286B/187B and 289B/180B models (see Fig. 36) are used to detect compressor voltage status and alert the user of potential problems. The control continuously monitors the high voltage on the run capacitor of the compressor motor. Voltage should be present any time the compressor contactor is energized and voltage should not be present when the contactor is de-energized.

Contactor Shorted Detection

If there is compressor voltage sensed when there is no demand for compressor operation, the contactor may be stuck closed or there may be a wiring error. The control will flash the appropriate fault code.

Compressor Thermal Cutout - 180B/187B/286B/289B

If the control senses the compressor voltage after start-up and is then absent for 10 consecutive seconds while cooling or heating demand exists, the thermal protector is open. The control de-energizes the compressor contactor for 15 minutes, but continues to operate the outdoor fan. The control Status LED will flash the appropriate code shown in Table 17. After 15 minutes, with a call for low or high stage cooling or heating, the compressor contactor is energized. If the thermal protector has not re-set, the outdoor fan is turned off. If the call for cooling or heating continues, the control will energize the compressor contactor every 15 minutes. If the thermal protector closes, (at the next 15 minute interval check) the unit will resume operation.

If the thermal cutout trips for three consecutive cycles, then unit operation is locked out for 4 hours and the appropriate fault code is displayed.

Low or High Contactor Open / No 230V at Compressor Contractor 180B/187B/286B/289B

If the compressor voltage is not sensed when the compressor should be starting, the appropriate contactor may be stuck open or there is a wiring error. The control will flash the appropriate fault code. Check the contactor and control box wiring.

Troubleshooting units for proper switching between low & high stages - 180B/187B/286B/289B

Check the suction pressures at the service valves. Suction pressure should be reduced by 3-10% when switching from low to high capacity.

NOTE: The liquid pressures are very similar between low and high stage operation, so liquid pressure should not be used for troubleshooting.

Compressor current should increase 20-45% when switching from low to high stage. The compressor solenoid when energized in high stage, should measure 24vac.

When the compressor is operating in low stage the 24v DC compressor solenoid coil is de-energized. When the compressor is operating in high stage, the 24v DC solenoid coil is energized. The solenoid plug harness that is connected to the compressor HAS an internal rectifier that converts the 24v AC signal to 24v DC. **DO NOT INSTALL A PLUG WITHOUT AN INTERNAL RECTIFIER.**

Unloader Test Procedure - 180B/187B/286B/289B

The unloader is the compressor internal mechanism, controlled by the DC solenoid, that modulates between high and low stage. If it is suspected that the unloader is not working, the following methods may be used to verify operation.

1. Operate the system and measure compressor amperage. Cycle the unloader on and off at 30 second plus intervals at the UI (from low to high stage and back to low stage). Wait 5 seconds after staging to high before taking a reading. The compressor amperage should go up or down at least 20 percent.
2. If the expected result is not achieved, remove the solenoid plug from the compressor and with the unit running and the UI calling for high stage, test the voltage output at the plug with a DC voltmeter. The reading should be 24 volts DC.
3. If the correct DC voltage is at the control circuit molded plug, measure the compressor unloader coil resistance. The resistance should be approximately 330 or 1640 ohms depending on unloader coil supplier. If the coil resistance is infinite or is grounded, the compressor must be replaced.

Temperature Thermistors

Thermistors are electronic devices which sense temperature. As the temperature increases, the resistance decreases. Thermistors are used to sense outdoor air (OAT) and coil temperature (OCT). Refer to Fig. 34 for resistance values versus temperature.

If the outdoor air or coil thermistor should fail, the control will flash the appropriate fault code. (See Table 17)

IMPORTANT: The outdoor air thermistor and coil thermistor should be factory mounted in the final locations. Check to ensure thermistors are mounted properly per Fig. 37 and Fig. 38.

Thermistor Sensor Comparison

The control continuously monitors and compares the outdoor air temperature sensor and outdoor coil temperature sensor to ensure proper operating conditions. The comparison is:

- In cooling if the outdoor air sensor indicates ≥ 10°F warmer than the coil sensor (or) the outdoor air sensor indicates ≥ 20°F cooler than the coil sensor, the sensors are out of range.
- In heating if the outdoor air sensor indicates ≥ 35°F warmer than the coil sensor (or) the outdoor air sensor indicates ≥ 10°F cooler than the coil sensor, the sensors are out of range.

If the sensors are out of range, the control will flash the appropriate fault code as shown in Table 17.

The thermistor comparison is not performed during low ambient cooling or defrost operation.

Failed Thermistor Default Operation

Factory defaults have been provided in the event of failure of outdoor air thermistor (OAT) and/or outdoor coil thermistor (OCT).

If the OAT sensor should fail, low ambient cooling will not be allowed and the one-minute outdoor fan off delay will not occur. Defrost will be initiated based on coil temperature and time.

If the OCT sensor should fail, low ambient cooling will not be allowed. Defrost will occur at each time interval during heating operation, but will terminate after 5 minutes.

If there is a thermistor out of range error, defrost will occur at each time interval during heating operation, but will terminate after 5 minutes.

Count the number of short and long flashes to determine the appropriate flash code. Table 17 gives possible causes and actions related to each error.

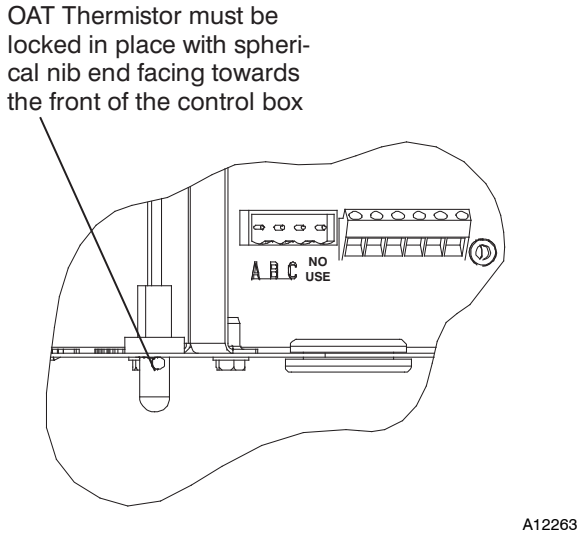

Fig. 37 – Outdoor Air Thermistor (OAT) Attachment

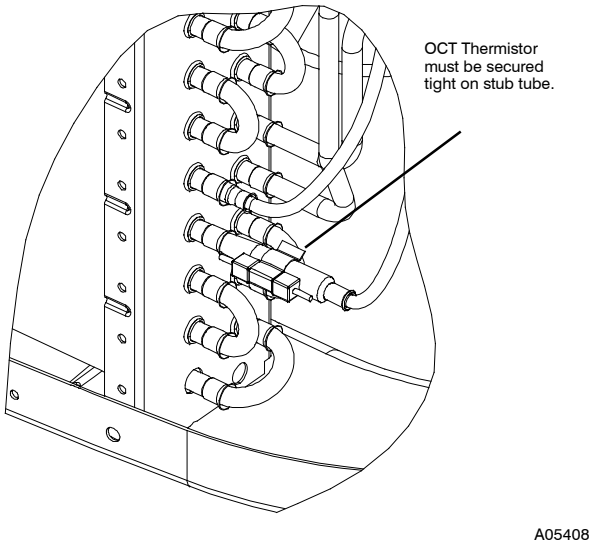

Fig. 38 – Outdoor Coil Thermistor (OCT) Attachment

Table 16—Two-Stage Compressor Resistances
(Winding Resistance at 70°F±20°)

Winding	024	036	048	060
Start (S-C)	1.64	1.52	1.86	1.63
Run (R-C)	1.30	0.88	0.52	0.39

Status Codes

Table 17 shows the status codes flashed by the amber status light. Most system problems can be diagnosed by reading the status code as flashed by the amber status light on the control board.

The codes are flashed by a series of short and long flashes of the status light. The short flashes indicate the first digit in the status code, followed by long flashes indicating the second digit of the error code.

The short flash is 0.25 seconds ON and the long flash is 1.0 second ON. Time between flashes is 0.25 seconds. Time between short flash and first long flash is 1.0 second. Time between code repeating is 2.5 seconds with LED OFF.

EXAMPLE:

3 short flashes followed by 2 long flashes indicates a 32 code. Table 17 shows this to be low pressure switch open.

Table 17—TROUBLESHOOTING

OPERATION	FAULT	AMBER LED FLASH CODE	POSSIBLE CAUSE AND ACTION
Standby – no call for unit operation	None	On solid, no flash	Normal operation
Low Stage Cool/Heat Operation	None	1, pause	Normal operation
High Stage Cool/Heat Operation	None	2, pause	Normal operation
Brown out protection is Disabled	None	5, pause	User made selection, see instructions for more detail
Brown out protection is Active	None	6, Pause	User made selection, see instructions for more detail
	System Communications Failure	16	Communication with User Interface lost. Check wiring to User Interface, indoor and outdoor units
	Invalid Model Plug	25	Control does not detect a model plug or detects an invalid model plug. Unit will not operate without correct model plug.
	High Pressure Switch Open	31*	High–pressure switch trip. Check refrigerant charge, outdoor fan operation and coils for airflow restrictions.
	Low Pressure Switch or Discharge Temp Switch Open	32*	Low–pressure switch or discharge temperature switch trip. Check refrigerant charge and indoor air flow.
	Control Fault	45	Outdoor unit control board has failed. Control board needs to be replaced.
	Brown Out (230 v)	46	Line voltage < 187v for at least 4 seconds. Compressor and fan operation not allowed until voltage≥190v. Verify line voltage.
	No 230v at Unit	47	There is no 230v at the contactor when indoor unit is powered and cooling/heating demand exists. Verify the disconnect is closed and 230v wiring is connected to the unit.
	Outdoor Air Temp Sensor Fault	53	Outdoor air sensor not reading or out of range. Ohm out sensor and check wiring.
	Outdoor Coil Sensor Fault	55	Coil sensor not reading or out of range. Ohm out sensor and check wiring.
	Thermistors out of range	56	Improper relationship between coil sensor and outdoor air sensor. Ohm out sensors and check wiring.
	Low Stage Thermal Cutout	71*	Compressor operation detected then disappears while low stage demand exists. Possible causes are internal compressor overload trip or start relay and capacitor held in circuit too long (if installed).
	High Stage Thermal Cutout	72*	Compressor operation detected then disappears while high stage demand exists. Possible causes are internal compressor overload trip or start relay and capacitor held in circuit too long (if installed).
	Contactor Shorted	73	Compressor voltage sensed when no demand for compressor operation exists. Contactor may be stuck closed or there is a wiring error.
	No 230V at Compressor	74	Compressor voltage not sensed when compressor should be starting. Contactor may be stuck open or there is a wiring error.
	Low Stage Thermal Lockout	81	Thermal cutout occurs in three consecutive low/high stage cycles. Low stage locked out for 4 hours or until 24v power recycled.
	High Stage Thermal Lockout	82	Thermal cutout occurs in three consecutive high/low stage cycles. High stage locked out for 4 hours or until 24v power recycled.
	Low–Pressure Lockout	83	Low pressure switch trip has occurred during 3 consecutive cycles. Unit operation locked out for 4 hours or until 24v power recycled.
	High–Pressure Lockout	84	High pressure switch trip has occurred during 3 consecutive cycles. Unit operation locked out for 4 hours or until 24v power recycled.

* Sequence: Compressor contactor is de–energized and outdoor fan is energized for up to 15 minutes. If demand still exists, control will energize compressor contactor after 15 minute delay. If fault is cleared, unit will resume operation. If fault still exists, fan shuts off, and error code continues to flash. Control will attempt re–start every 15 minutes. Cycling low voltage defeats the 15 minute delay.

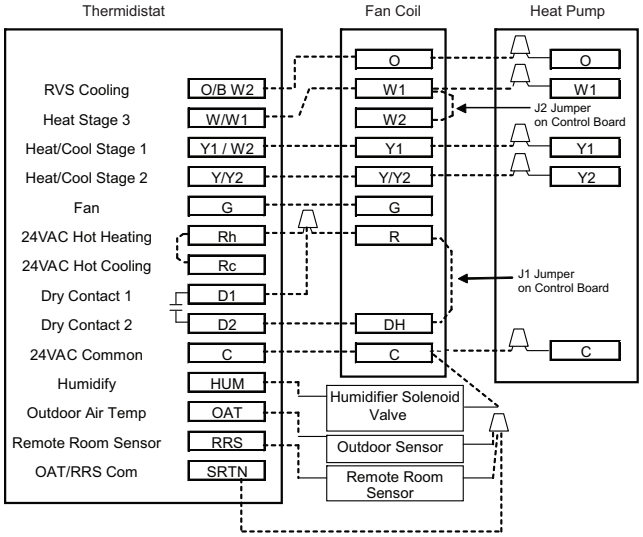

Fig. 39 – Thermidistat Models T6-PRH-01 or T6-NRH-01) Wiring with 2-Stage Heat Pump (non-communicating)

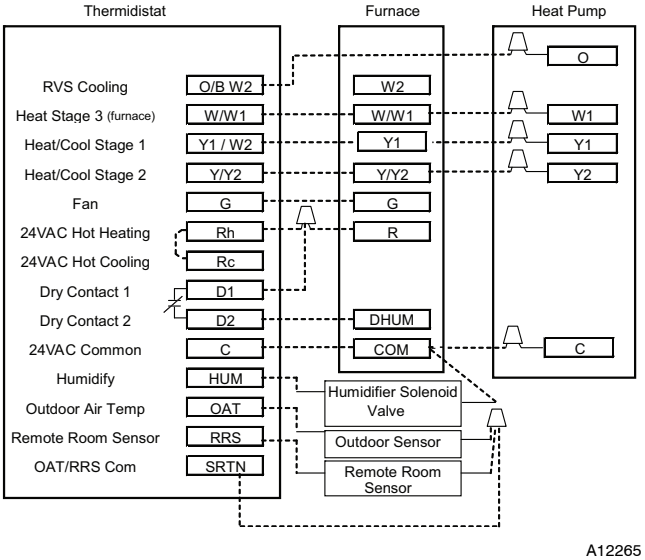

Fig. 40 – Thermidistat Model T6-PRH-01 or T6-NRH-01 with Variable Speed Furnace and 2-Stage Heat Pump (non-communicating)

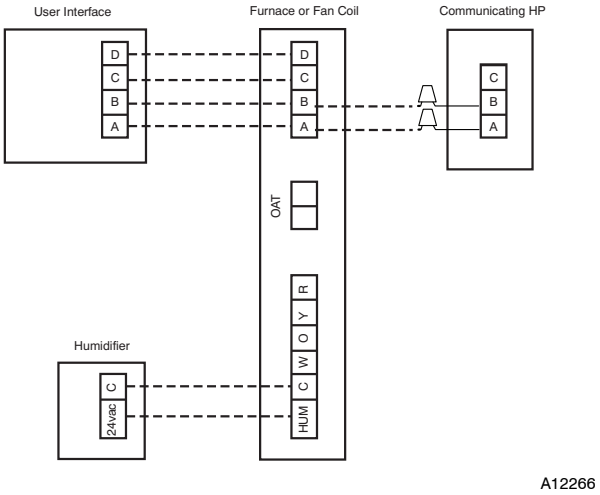

Fig. 41 – Variable Speed Furnace or Fan Coil Wiring with Communicating 2-Stage HP

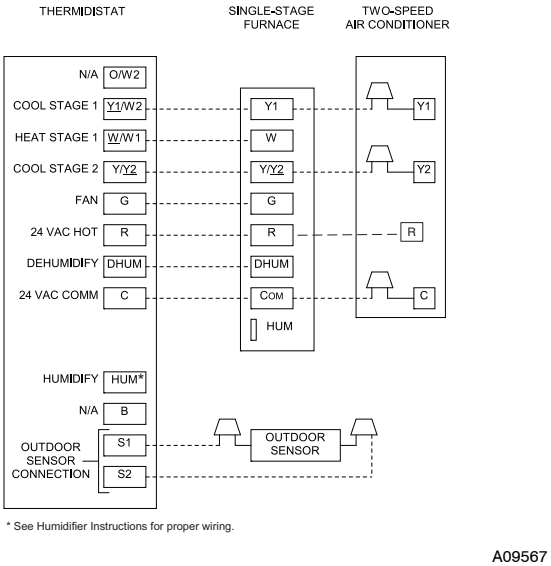

Fig. 42 – Single Stage Furnace with 2-Stage Air Conditioner

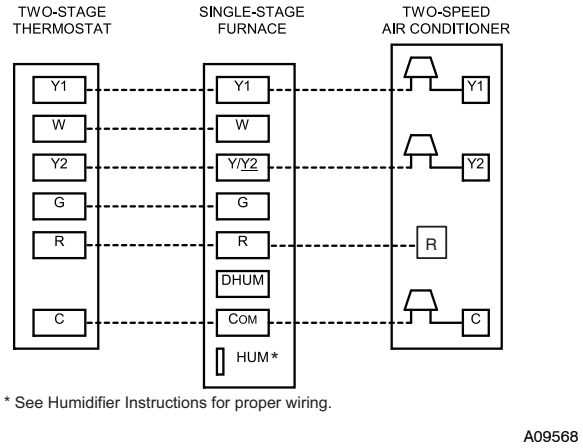

Fig. 43 – 2-Stage Thermostat with Single-Stage Furnace and 2-Stage Air Conditioner

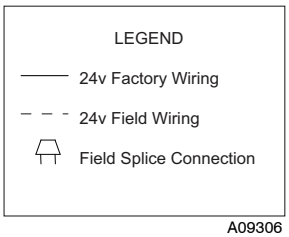

TWO STAGE NON-COMMUNICATING 127A/226A

These units are a low cost 2-stage option that is non-communicating utilizing 2 stage scroll technology. These units require Performance Boost furnace (58PH, 58MEB), variable speed furnace (58MV, 58CV) or new model variable speed fan coil (FV4C). Variable speed fan coils prior to the FV4C will NOT be rated with the new Comfort series two stage units as they are not capable of meeting the air flow requirements necessary for rating. These are designed to operate with basic 24 volt thermostat inputs.

Operating Ambient

The minimum outdoor operating ambient in cooling mode is 55°F (12.78°C), and the maximum outdoor operating ambient in cooling mode is 125°F (51.67°C) when operating voltage is 230v. For 208v applications, the maximum outdoor ambient is 120°F.

NOTE: Units operating at high stage operation, 208v (or below) line voltage and at an outdoor ambient of 120°F (or greater), may experience compressor trip.

NOTE: This product is not approved for low ambient cooling at this time, and no low ambient kit is available.

Airflow Selections (ECM Furnaces)

The ECM Furnaces provide blower operation to match the capacities of the compressor during high and low stage cooling operation. Tap selections on the furnace control board enable the installing technician to select the proper airflows for each stage of cooling. Below is a brief summary of the furnace airflow configurations

1. The Y2 call for high stage cooling energizes the "Cool" tap on the control board. The grey wire from cool tap is connected to tap 5 on the motor. Refer to the furnace Product Data to find the corresponding airflow. If the airflow setting for high cooling needs to be switched from tap 5 to a different tap, jumper a connection from the cool tap to the desired tap so that the Y2 signal is communicated via the cool tap to the desired speed tap.
2. The Y1 call for low stage cooling energizes the "Fan" tap on the control board. The red wire from the fan tap is connected to tap 1 on the motor. Refer to the furnace Product Data to find the corresponding airflow. If the airflow setting for low cooling needs to be switched from tap 1 to a different tap, jumper a connection from the Fan tap to the desired tap so that the Y1 signal is communicated via the Fan tap to the desired speed tap. The Y1 setting will also govern the continuous fan airflow for the furnace.

Refer to the literature for the furnace for further details.

Airflow Selection for Variable Speed Furnaces (non-communicating)

The variable speed furnaces provide blower operation to match the capacities of the compressor during high and low stage cooling operation. The furnace control board allows the installing technician to select the proper airflows for each stage of cooling. Below is a summary of required adjustments. See furnace installation instructions for more details:

1. Turn SW1-5 ON for 400 CFM/ton airflow or OFF for 350 CFM/ton airflow. Factory default is OFF.
2. The A/C DIP switch setting determines airflow during high stage cooling operation. Select the A/C DIP switch setting corresponding to the available airflow shown in the furnace Installation Instructions that most closely matches the required airflow shown in the air conditioning Product Data for HIGH speed.
3. The CF DIP switch setting determines airflow during low stage cooling operation. Select the CF DIP switch setting corresponding to the available airflow shown in the furnace installation instructions that most closely matches the required airflow shown in the air conditioning Product Data for LOW speed. If a higher or lower continuous fan speed is desired, the continuous fan speed can be changed using the fan switch on the thermostat. Refer to the furnace Installation Instructions for details of how to use this feature.

Airflow Selection for FV4C Fan Coils (non-communicating)

The FV4 provides high- and low-stage blower operation to match the capacities of the compressor at high- and low-stage.

To select recommended airflow, refer to the FV4C Installation Instructions. The FV4C utilizes an Easy Select control board that allows the installing technician to select proper airflows. This fan coil has an adjustable blower-off delay factory set at 90 sec. for high- and low-stage blower operation.

SYSTEM FUNCTION AND SEQUENCE OF OPERATION (127A/226A)

NOTE: Defrost control board is equipped with 5 minute lockout timer that is initiated upon any interruption of power.

Turn on power to indoor and outdoor units. Transformer is energized.

These models utilize a 2-stage indoor thermostat. With a call for first (low) stage cooling or heating, the outdoor fan and low-stage compressor are energized. If low-stage cannot satisfy cooling or heating demand, high-stage is energized by the second (high) stage of the indoor thermostat. After the second stage is satisfied, the unit returns to low-stage operation until second stage is required again. When both, first and second stage cooling or heating are satisfied, the compressor will shut off.

Cooling

With first stage cooling, Y and O are powered on; and with second stage cooling, Y2, Y and O are powered on. The O energizes the reversing valve, switching it to cooling position. The Y signal sends low voltage through the safeties and energizes the T1 terminal on the circuit board. If the compressor has been off for 5 minutes, or power has not been cycled for 5 minutes, the OF2 relay and T2 terminal will energize. This will close the contactor and start the outdoor fan motor and compressor. When the cycle is complete, Y is turned off, stopping the compressor and outdoor fan. The 5 minute time guard begins counting. Compressor will not come on until this delay expires. In the event of a power interruption, the time guard will not allow another cycle for 5 minutes.

Heating

With first stage heating, Y is powered on; with second stage heating, Y2 and Y are powered on. The Y signal sends low voltage through the safeties and energizes the T1 terminal on the circuit board. If the compressor has been off for 5 minutes or power has not been cycled for 5 minutes, the OF2 relay and T2 terminal will energize. This will close the contactor and start the outdoor fan motor and compressor.

When the cycle is complete, Y is turned off, stopping the compressor nd outdoor fan. The 5 minute time guard begins counting. Compressor will not come on until this delay expires. In the event of a power interruption, the time guard will not allow another cycle for 5 minutes.

Compressor Operation

The basic scroll design has been modified with the addition of an internal unloading mechanism that opens a by-pass port in the first compression pocket, effectively reducing the displacement of the scroll. The opening and closing of the by-pass port is controlled by an internal electrically operated solenoid. The modulated scroll uses a single step of unloading to go from full capacity to approximately 67% capacity.

A single speed, high efficiency motor continues to run while the scroll modulates between the two capacity steps. Modulation is achieved by venting a portion of the gas in the first suction pocket back to the low side of the compressor, thereby reducing the effective displacement of the compressor.

Full capacity is achieved by blocking these vents, thus increasing the displacement to 100%. A DC solenoid in the compressor controlled by a rectified 24 volt AC signal in the external solenoid plug moves the slider ring that covers and uncovers these vents.

The vent covers are arranged in such a manner that the compressor operates at approximately 67% capacity when the solenoid is not energized and 100% capacity when the solenoid is energized. The loading and unloading of the two step scroll is done ”on the fly” without shutting off the motor between steps.

NOTE: 67% compressor capacity translates to approximately 75% cooling or heating capacity at the indoor coil.

The compressor will always start unloaded and stay unloaded for five seconds even when the thermostat is calling for high stage capacity.

Quiet Shift

Quiet shift is a field selectable defrost mode (factory set to OFF), which will eliminate occasional noise that could be heard at the start of defrost cycle and restarting of heating cycle. It is selected by placing DIP switch 3 on defrost board (see Fig. 44) in the ON position.

When Quiet Shift switch is placed in ON position, and a defrost is initiated, the following sequence of operation will occur. Reversing valve will energize, compressor will turn off for 30 seconds, and then turn back on to complete defrost. At the start of heating after conclusion of defrost, reversing valve will de-energize, compressor will turn off for another 30 seconds, and the fan will turn off for 40 seconds, before starting in the heating mode.

HK32EA008 Defrost Control

The HK32EA008 defrost control is used in all non-communicating heat pumps and has all the same functionality, speedups, and troubleshooting as the HK32EA003 except for the forced defrost timing when Quiet Shift-2 is enabled.

Quiet Shift-2 (non-communicating)

Quiet shift-2 is a field selectable defrost mode (factory set to OFF), which will reduce the occasional noise that could be heard at the start of defrost cycle and restarting of heating cycle. It is selected by placing DIP switch 3 on defrost board in the ON position.

When Quiet Shift-2 switch is placed in ON position, and defrost is initiated, the following sequence of operation will occur: The compressor will be de-energized for approximately 1 minute, then the reversing valve will be energized. A few seconds later, the compressor will be re-energized and the normal defrost cycle starts. Once defrost termination conditions have been met, the following sequence will occur: The compressor will be de-energized for approximately 1 minute, then the reversing valve will be de-energized. A few seconds later, the compressor will be re-energized and the normal heating cycle starts.

Defrost

The defrost control is a time/temperature control which has field selectable settings of 30, 60, 90, or 120 minutes, factory set to 90 minutes. These settings represent the amount of time that must pass after closure of the defrost thermostat before the defrost sequence begins.

The defrost thermostat senses coil temperature throughout the heating cycle. When the coil temperature reaches the defrost thermostat setting of approximately 32°F (0°C), it will close, which energizes the DFT terminal and begins the defrost timing sequence. When the DFT has been energized for the selected time, the defrost cycle begins. Defrost cycle is terminated when defrost thermostat opens, or automatically after 10 minutes.

Defrost Speedup

To initiate a forced defrost, speedup pins (J1) must be shorted with a flat head screwdriver for 5 seconds and **RELEASED**. If the defrost thermostat is open, a short defrost cycle will be observed (actual length depends on Quiet Shift switch position). When Quiet Shift is off, only a short 30 second defrost cycle is observed. With Quiet Shift ON, the speedup sequence is one minute; 30 second compressor off period followed by 30 seconds of defrost with compressor operation. When returning to heating mode, the compressor will turn off for an additional 30 seconds and the fan for 40 seconds.

If the defrost thermostat is closed, a complete defrost cycle is initiated. If the Quiet Shift switch is turned on, the compressor will be turned off for two 30 second intervals as explained previously.

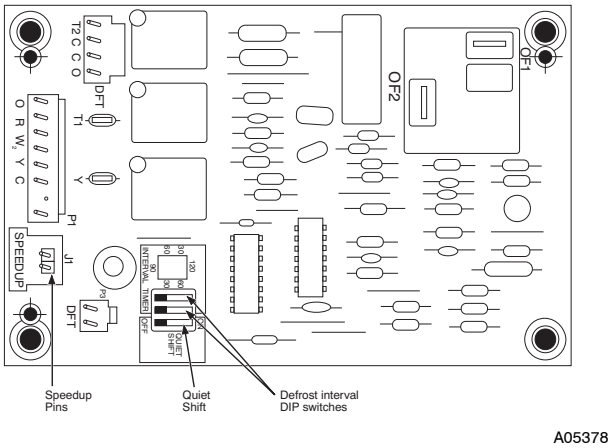

Fig. 44 – Defrost Control

CHECK CHARGE

Factory charge amount and desired subcooling are shown on unit rating plate. Charging method is shown on information plate inside unit. To properly check or adjust charge, conditions must be favorable for subcooling charging. Favorable conditions exist when the outdoor temperature is between 70°F and 100°F (21.11°C and 37.78°C), and the indoor temperature is between 70°F and 80°F (21.11°C and 26.67°C). Follow the procedure below:

Unit is factory charged for 15ft (4.57 m) of lineset. Adjust charge by adding or removing 0.6 oz/ft (.018 kg/m) of 3/8 liquid line above or below 15ft (4.57 m) respectively.

For standard refrigerant line lengths (80 ft/24.38 m or less), allow system to operate in cooling mode at least 15 minutes. If conditions are favorable, check system charge by subcooling method. If any adjustment is necessary, adjust charge slowly and allow system to operate for 15 minutes to stabilize before declaring a properly charged system.

If the indoor temperature is above 80°F (26.67°C), and the outdoor temperature is in the favorable range, adjust system charge by weight based on line length and allow the indoor temperature to drop to 80°F (26.67°C) before attempting to check system charge by subcooling method as described above.

If the indoor temperature is below 70°F (21.11°C), or the outdoor temperature is not in the favorable range, adjust charge for line set length above or below 15ft (4.57 m) only. Charge level should then be appropriate for the system to achieve rated capacity. The charge level could then be checked at another time when the both indoor and outdoor temperatures are in a more favorable range.

NOTE: If line length is beyond 80 ft (24.38 m) or greater than 20 ft (6.10 m) vertical separation, See Long Line Guideline for special charging requirements.

Heating Check Chart Procedure

To check system operation during heating cycle, refer to the Heating Check Chart on outdoor unit. This chart indicates whether a correct relationship exists between system operating pressure and air temperature entering indoor and outdoor units. If pressure and temperature do not match on chart, system refrigerant charge may not be correct. Do not use chart to adjust refrigerant charge.

Verify 226A units for proper switching between low & high stages

Check the suction pressures at the service valves. Suction pressure should be reduced by 3-10% when switching from low to high capacity.

Compressor current should increase 20-45% when switching from low to high stage. The compressor solenoid when energized in high stage, should measure 24vac.

When the compressor is operating in low stage the 24v DC compressor solenoid coil is de-energized. When the compressor is operating in high stage, the 24v DC solenoid coil is energized. The solenoid plug harness that is connected to the compressor has an internal rectifier that converts the 24v AC signal to 24v DC. **DO NOT INSTALL A PLUG WITHOUT AN INTERNAL RECTIFIER.**

Unloader Test Procedure

The unloader is the compressor internal mechanism, controlled by the DC solenoid, that modulates between high and low stage. If it is suspected that the unloader is not working, the following methods may be used to verify operation.

1. Operate the system and measure compressor amperage. Cycle the unloader on and off at 30 second plus intervals at the thermostat (from low to high stage and back to low stage). Wait 5 seconds after staging to high before taking a reading. The compressor amperage should go up or down at least 20 percent.
2. If the expected result is not achieved, remove the solenoid plug from the compressor and with the unit running and the thermostat calling for high stage, test the voltage output at the plug with a DC voltmeter. The reading should be 24 volts DC.
3. If the correct DC voltage is at the control circuit molded plug, measure the compressor unloader coil resistance. The resistance should be approximately 330 or 1640 ohms depending on unloader coil supplier. If the coil resistance is infinite or is grounded, the compressor must be replaced.

CARE AND MAINTENANCE

To assure high performance and minimize possible equipment malfunction, it is essential that maintenance be performed periodically on this equipment. The frequency with which maintenance is performed is dependent on such factors as hours of operation, geographic location, and local environmental conditions.

⚠ WARNING

ELECTRICAL SHOCK HAZARD

Failure to follow this warning could result in personal injury or death.

Disconnect all electrical power to unit before performing any maintenance or service on outdoor unit. Remember to disconnect power supply to air handler as this unit supplies low-voltage power to the outdoor unit.

The minimum maintenance that should be performed on this equipment is as follows:

1. Check outdoor coil for cleanliness each heating and cooling season and clean as necessary.
2. Check fan motor and blade for cleanliness each month during cooling season and clean as necessary.
3. Check electrical connections for tightness and controls for proper operation each cooling season and service as necessary.

⚠ CAUTION

UNIT DAMAGE HAZARD

Failure to follow this caution may result in equipment damage or improper operation.

Because of possible damage to the equipment or personal injury, maintenance should be performed by qualified personnel only.

Desert and Seacoast Locations

Special consideration must be given to installation and maintenance of condensing units installed in coastal or desert locations. This is because salt and alkali content of sand adheres to aluminum fins of coil and can cause premature coil failure due to corrosion.

Preventive measures can be taken during installations, such as:

1. Locate unit on side of structure opposite prevailing winds.
2. Elevate unit to height where drifting sand cannot pile up against coil. Mounting feet, 4 in. high, are available as accessories and can be used to elevate unit.
3. Addition of coastal filter (See Product Data Digest for accessory listing).

Maintenance in desert and seacoast locations:

1. Frequent inspection of coil and basepan especially after storms and/or high winds.
2. Clean coil by flushing out sand from between coil fins and out of basepan as frequently as inspection determines necessary.
3. In off season, cover with covering that allows air to circulate through but prevents sand from sifting in (such as canvas material). Do not use plastic as plastic will hold moisture possibly causing corrosion.

Cleaning Coil

1. Remove top cover. (See Remove Top Cover in Cabinet section of this manual.)
2. Remove coil grilles or louvers (as applicable) to gain full access to coils for cleaning.

⚠ CAUTION

UNIT DAMAGE HAZARD

Failure to follow this caution may result in equipment damage or improper operation.

Coil fin damage can result in higher operating costs or compressor damage. Do not use flame, high-pressure water, steam, volatile or corrosive cleaners on fins or tubing.

3. Clean coil using vacuum cleaner and its crevice tool. Move crevice tool vertically, close to area being cleaned, making sure tool touches only dirt on fins and not fins. to prevent fin damage, do not scrub fins with tool or move tool horizontally against fins.
4. If oil deposits are present, spray coil with ordinary household detergent. Wait 10 minutes, and proceed to next step.
5. Using garden hose, spray coil vertically downward with constant stream of water at moderate pressure. Keep nozzle at a 15- to 20° angle, about 3 in. from coil face and 18 in. from tube. Spray so debris is washed out of coil and basepan.
6. Reinstall top cover and position blade.
7. Reconnect electrical power and check for proper operation.

Cleaning Outdoor Fan Motor and Blade

1. Remove fan motor and blade. Be careful not to bend or dent fan blade.
2. Clean motor and blade with soft brush or cloth. Be careful not to disturb balance weights on fan blade.
3. Check fan blade setscrew for tightness.
4. Reinstall fan motor and blade to top cover and check for alignment.
5. Reinstall top cover and position blade.
6. Reconnect electrical power and check for proper operation.

Electrical Controls and Wiring

1. Disconnect power to both outdoor and indoor units.
2. Check all electrical connections for tightness. Tighten all screws on electrical connections. If any connections appear to be burned or smoky, disassemble the connection, clean all parts and stripped wires, and reassemble. Use a new connector if old one is burned or corroded, and crimp tightly.
3. Reconnect electrical power to indoor and outdoor units and observe unit through 1 complete operating cycle.
4. If there are any discrepancies in operating cycle, troubleshoot to find cause and correct.

Refrigerant Circuit

1. Check refrigerant charge using the superheat method, and if low on charge, check unit for leaks using an electronic leak detector.
2. If any leaks are found, remove and reclaim or isolate charge (pumpdown) if applicable. Make necessary repairs.
3. Evacuate, recharge, and observe unit through 1 complete operating cycle.

Final Check-Out

After the unit has been operating, the following items should be checked.

1. Check that unit operational noise is not excessive due to vibration of component, tubing, panels, etc. If present, isolate problem and correct.
2. Check to be sure caps are installed on service valves and are tight.
3. Check to be sure tools, loose parts, and debris are removed from unit.
4. Check to be sure all panels and screws are in place and tight.

PURON® (R-410A) REFRIGERANT QUICK REFERENCE GUIDE

- Puron refrigerant operates at 50-70 percent higher pressures than R-22. Be sure that servicing equipment and replacement components are designed to operate with Puron refrigerant.
- Puron refrigerant cylinders are rose colored.
- Recovery cylinder service pressure rating must be 400 psig, DOT 4BA400 or DOT BW400.
- Puron refrigerant systems should be charged with liquid refrigerant. Use a commercial type metering device in the manifold hose when charging into suction line with compressor operating
- Manifold sets should be 700 psig high side and 180 psig low side with 550 psig low-side retard.
- Use hoses with 700 psig service pressure rating.
- Leak detectors should be designed to detect HFC refrigerant.
- Puron refrigerant, as with other HFCs, is only compatible with POE oils.
- Vacuum pumps will not remove moisture from oil.
- Do not use liquid-line filter driers with rated working pressures less than 600 psig.
- Do not leave Puron refrigerant suction line filter driers in line longer than 72 hours.
- Do not install a suction-line filter drier in liquid line.
- POE oils absorb moisture rapidly. Do not expose oil to atmosphere.
- POE oils may cause damage to certain plastics and roofing materials.
- Wrap all filter driers and service valves with wet cloth when brazing.
- A factory approved liquid-line filter drier is required on every unit.
- Do NOT use an R-22 TXV.
- If indoor unit is equipped with an R-22 TXV or piston metering device, it must be changed to a hard shutoff Puron TXV.
- Never open system to atmosphere while it is under a vacuum.
- When system must be opened for service, recover refrigerant, evacuate then break vacuum with dry nitrogen and replace filter driers. Evacuate to 500 microns prior to recharging.
- Do not vent Puron refrigerant into the atmosphere.
- Do not use capillary tube coils.
- Observe all **warnings**, **cautions**, and **bold** text.
- All indoor coils must be installed with a hard shutoff Puron TXV metering device.

AIR CONDITIONER TROUBLESHOOTING CHART

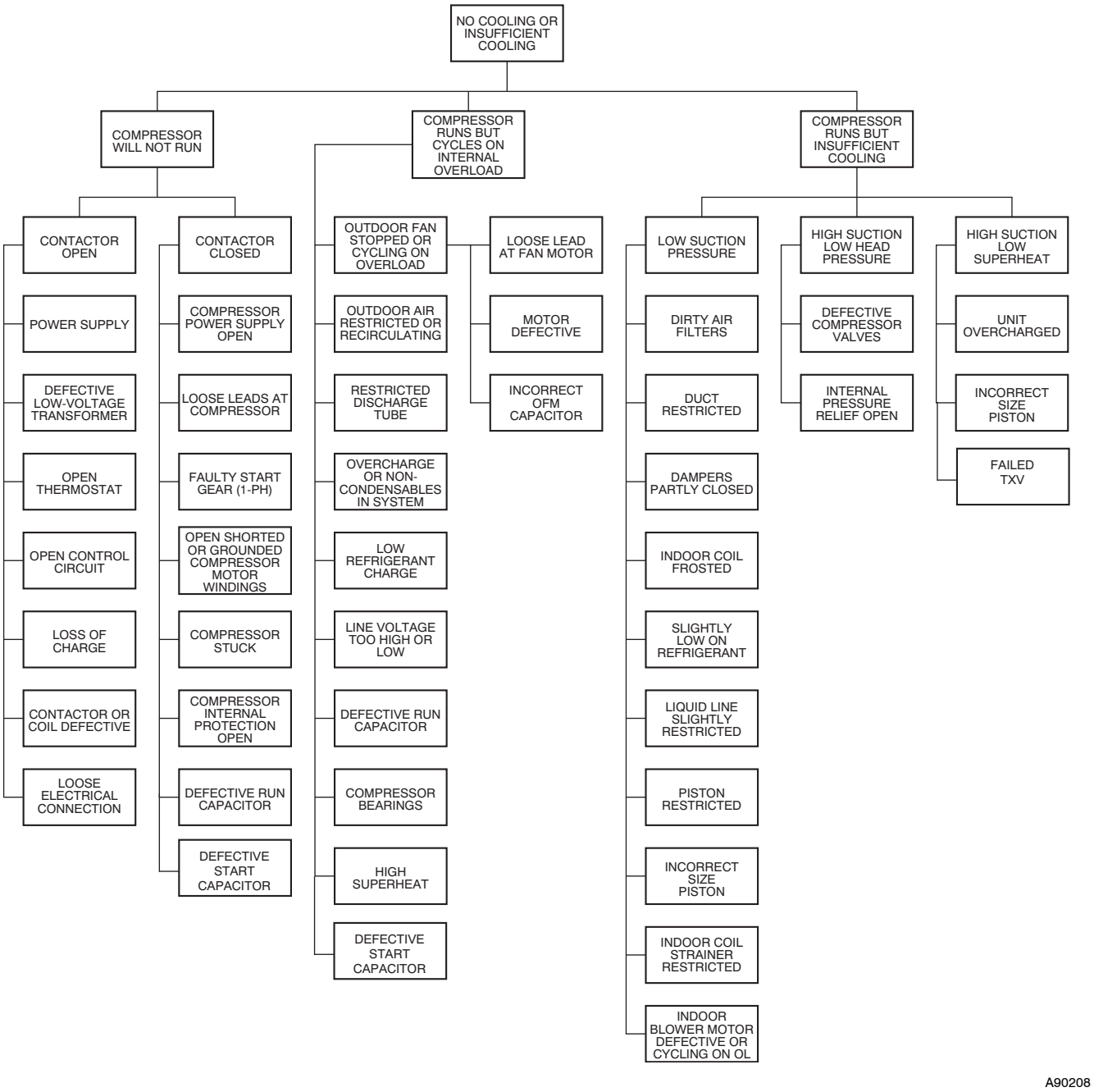

Fig. 45 – Air Conditioner Troubleshooting Chart

HEAT PUMP
TROUBLESHOOTING HEATING CYCLE

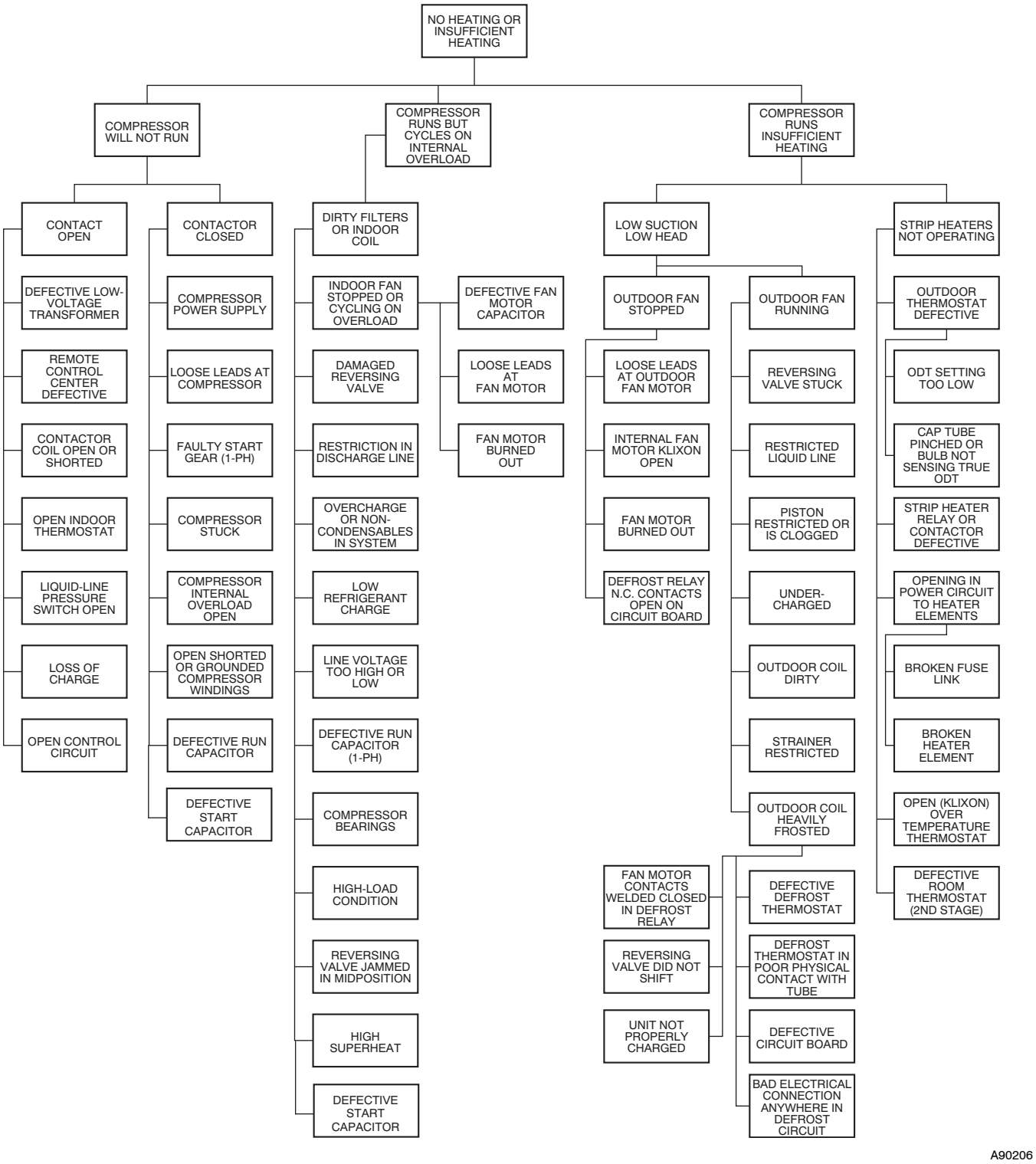

Fig. 46 – Heat Pump Troubleshooting - Heating Cycle

HEAT PUMP
TROUBLESHOOTING COOLING CYCLE

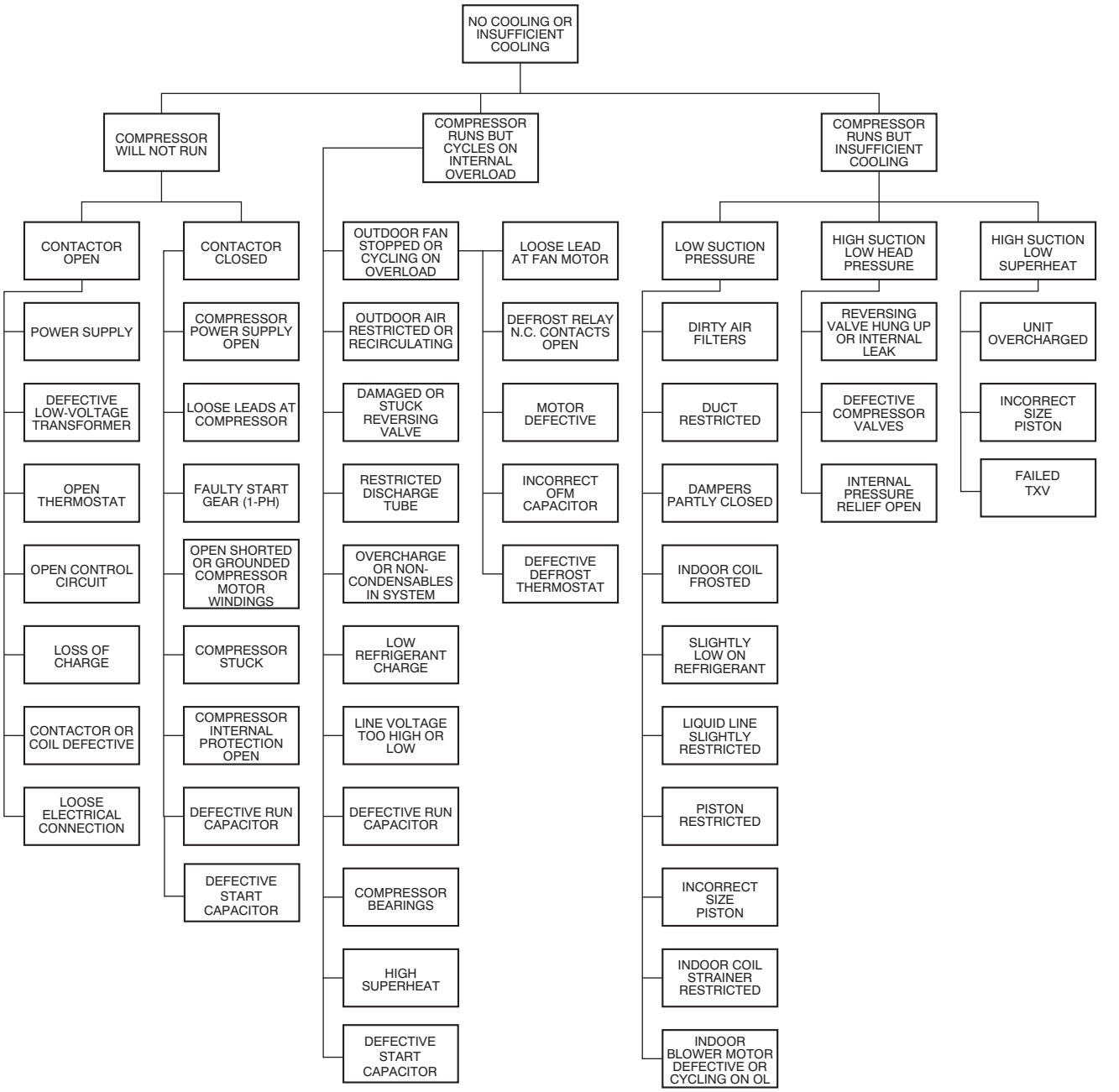

Fig. 47 – Heat Pump Troubleshooting - Cooling Cycle

INDEX OF TABLES

DESCRIPTION	TABLE #
Required Field-Installed Accessories for Air Conditioners	1
Required Field-Installed Accessories for Heat Pumps	2
Defrost Control Speed-Up Timing Sequence	3
ECM Fan Motor Wires	4
Fitting Losses in Equivalent Feet	5
Puron System Suction Pressure Drop	6
R-22 System Suction Pressure Drop	7
Puron Refrigerant Pressure Temperature Chart	8
R-22 Refrigerant Pressure Temperature Chart	9
Puron Subcooling Chart	10
Puron Superheat Chart	11
R-22 Subcooling Chart	12
R-22 Superheat Chart	13
TWO-STAGE 286B / 289B / 180B / 187B	
Model Plug Information	14
Outdoor Fan Motor PWM Above 55°F/12.7°C Outdoor Temp (DC volts, Tolerance +/- 2%)	15
Two-Stage Compressor Resistances (Winding resistance at 70°F ± 20°)	16
Troubleshooting	17

© 2017 Bryant Heating & Cooling Systems 7310 W. Morris St. Indianapolis, IN 46231
Edition Date: 05/17

Catalog No. SM01–8

Manufacturer reserves the right to discontinue, or change at any time, specifications or designs without notice and without incurring obligations.

Replaces: SM01–7