280ANV EVOLUTION® EXTREME VARIABLE SPEED HEAT PUMP WITH PURON® REFRIGERANT (2 - 5 Ton)

bryant®

Service Manual

TABLE OF CONTENTS

PAGE

UNIT IDENTIFICATION 2
SAFETY CONSIDERATIONS 3
GENERAL INFORMATION 3
ELECTRICAL 4-6
ELECTRONIC EXPANSION VALVE (EXV) 5-6
- Controller 5
- Crankcase Heater 5
- Outdoor Fan Motor 5
- Time-Delays 5
- Evolution Controlled Low Ambient Cooling 6
- Utility Interface with Evolution Control 6

COMMUNICATION AND STATUS FUNCTION LIGHTS 6-7
REFRIGERANT PIPING LENGTH LIMITATIONS 8
LONG LINE APPLICATIONS 8-9
TROUBLESHOOTING 10-30
REFRIGERATION SYSTEM 33-37
- Refrigerant 33
- Compressor Oil 33
- Servicing Systems on Roofs With Synthetic Materials 33
- Brazing 33
- Service Valves and Pump down 34-35
- Liquid Line Filter Drier 36
- Suction Line Filter Drier 36
- Thermostatic Expansion Valve (TXV) 36
- Accumulator 37

REFRIGERATION SYSTEM REPAIR 38

UNIT IDENTIFICATION

The unit is identified using a 16 digit model number structure. It is recommended providing the complete 16 digit model number when ordering replacement parts to insure receiving the correct parts.

MODEL NUMBER NOMENCLATURE

1	2	3	4	5	6	7	8	9	10	11	12	14
N	N	N	A	A/N	N	N	N	N	A/N	A/N	N	A
2	**8**	**0**	**A**	**N**	**V**	**0**	**3**	**6**	**0**	**0**	**0**	**A**
Product Family 2=HP	Tier 8= Evolution Series	SEER 0 = 20 SEER	Major Series A=Puron	Voltage N= 208–230–1 or 208/230–1	Variations V = Variable Speed	Cooling Capacity			Open 0=Not Defined	Open 0=Not Defined	Open 0=Not Defined	Series A = Original Series

SERIAL NUMBER NOMENCLATURE

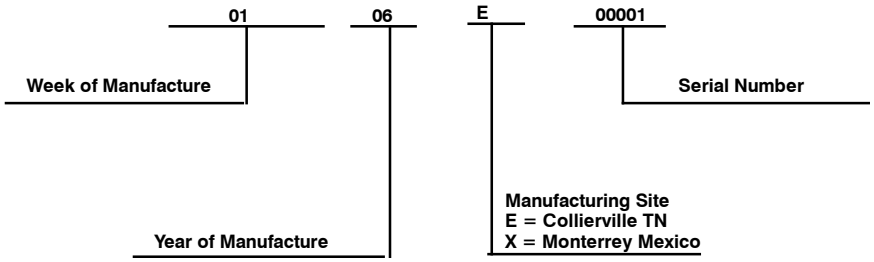

SAFETY CONSIDERATIONS

Installation, service, and repair of these units should be attempted only by trained service technicians familiar with standard service instruction and training material.

All equipment should be installed in accordance with accepted practices and unit Installation Instructions, and in compliance with all national and local codes. Power should be turned off when servicing or repairing electrical components. Extreme caution should be observed when troubleshooting electrical components with power on. Observe all warning notices posted on equipment and in instructions or manuals.

⚠ WARNING

ELECTRICAL SHOCK HAZARD

Failure to follow this warning could result in personal injury or death.

Before installing, modifying, or servicing system, main electrical disconnect switch must be in the OFF position. There may be more than 1 disconnect switch. Lock out and tag switch with a suitable warning label.

⚠ WARNING

ELECTRICAL HAZARD - HIGH VOLTAGE!

Failure to follow this warning could result in personal injury or death.

Electrical components may hold charge. DO NOT remove control box cover for 2 minutes after power has been removed from unit.

PRIOR TO TOUCHING ELECTRICAL COMPONENTS:

Verify less than 20 vdc voltage at inverter connections shown on inverter cover.

⚠ CAUTION

CUT HAZARD

Failure to follow this caution may result in personal injury.

Sheet metal parts may have sharp edges or burrs. Use care and wear appropriate protective clothing and gloves when handling parts.

⚠ WARNING

UNIT OPERATION AND SAFETY HAZARD

Failure to follow this warning could result in personal injury or equipment damage.

Puron® (R-410A) systems operate at higher pressures than standard R-22 systems. Do not use R-22 service equipment or components on Puron® equipment. Ensure service equipment is rated for Puron®.

Refrigeration systems contain refrigerant under pressure. Extreme caution should be observed when handling refrigerants. Wear safety glasses and gloves to prevent personal injury. During normal system operations, some components are hot and can cause burns. Rotating fan blades can cause personal injury. Appropriate safety considerations are posted throughout this manual where potentially dangerous techniques are addressed.

If you do not understand any of the warnings, contact your product distributor for better interpretation of the warnings.

GENERAL INFORMATION

The 280ANV Evolution Extreme heat pump features a new outdoor cabinet design that uses a four sided coil design to minimize the unit foot print and provide the best heat exchange taking full advantage of the latest variable speed technology. The heart of the system is the Copeland variable speed compressor powered through the use of the Emerson variable speed drive (VSD) inverter control. Through the use of Puron refrigerant ,ECM outdoor fan, Emerson VSD and Copeland variable speed compressor along with the new outdoor cabinet the unit achieves a Seasonal Energy Efficiency Ratio (SEER) up to 20.5 and up to 13 Heating Seasonal Performance Factor (HSPF).

To ensure all of the above technology provides the ultimate in comfort it is combined with either the FE fan coil or Variable Speed Gas furnace controlled with a two wire communication Evolution User Interface (SYSTXBBECN01-A, SYSTXBBECC01-A or SYSTXBBECW01-A). software version 23 or newer. Ensuring achievement of comfort with the consciences of finger tip trouble shooting and diagnostic capability.

ELECTRICAL

⚠ WARNING

ELECTRICAL SHOCK HAZARD

Failure to follow this warning could result in personal injury or death.

Exercise extreme caution when working on any electrical components. Shut off all power to system prior to troubleshooting. Some troubleshooting techniques require power to remain on. In these instances, exercise extreme caution to avoid danger of electrical shock. ONLY TRAINED SERVICE PERSONNEL SHOULD PERFORM ELECTRICAL TROUBLESHOOTING.

Aluminum Wire

⚠ CAUTION

UNIT OPERATION AND SAFETY HAZARD

Failure to follow this caution may result in equipment damage or improper operation.

Aluminum wire may be used in the branch circuit (such as the circuit between the main and unit disconnect), but only copper wire may be used between the unit disconnect and the unit.

Whenever aluminum wire is used in branch circuit wiring with this unit, adhere to the following recommendations.

Connections must be made in accordance with the National Electrical Code (NEC), using connectors approved for aluminum wire. The connectors must be UL approved (marked Al/Cu with the UL symbol) for the application and wire size. The wire size selected must have a current capacity not less than that of the copper wire specified, and must not create a voltage drop between service panel and unit in excess of 2 of unit rated voltage. To prepare wire before installing connector, all aluminum wire must be “brush-scratched” and coated with a corrosion inhibitor such as Pentrox A. When it is suspected that connection will be exposed to moisture, it is very important to cover entire connection completely to prevent an electrochemical action that will cause connection to fail very quickly. Do not reduce effective size of wire, such as cutting off strands so that wire will fit a connector. Proper size connectors should be used. Check all factory and field electrical connections for tightness. This should also be done after unit has reached operating temperatures, especially if aluminum conductors are used.

Contactor

The contactor provides a means of applying power to unit using low voltage (24v) from transformer in order to power contactor coil. Depending on unit model, you may encounter single- or double-pole contactors. Exercise extreme caution when troubleshooting as 1 side of line may be electrically energized. The contactor coil is powered by 24vac. If contactor does not operate:

1. With power off, check whether contacts are free to move. Check for severe burning or arcing on contact points.
2. With power off, use ohmmeter to check for continuity of coil. Disconnect leads before checking. A low resistance reading is normal. Do not look for a specific value, as different part numbers will have different resistance values.
3. Reconnect leads and apply low-voltage power to contactor coil. This may be done by leaving high-voltage power to outdoor unit off and turning thermostat to cooling. Check voltage at coil with voltmeter. Reading should be between 20v and 30v. Contactor should pull in if voltage is correct and coil is good. If contactor does not pull in, replace contactor.
4. With high-voltage power off and contacts pulled in, check for continuity across contacts with ohmmeter. A very low or 0 resistance should be read. Higher readings could indicate burned or pitted contacts which may cause future failures.

Parts Location

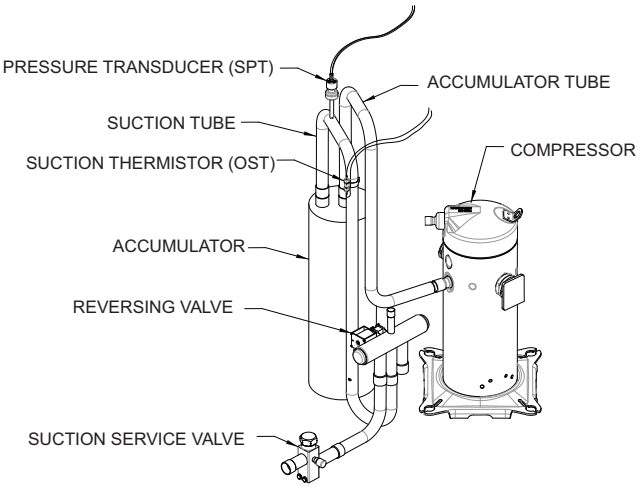

Type: 10k negative temperature coefficient Suction Thermistor used to control EXV

A11103

Fig. 1 – Suction Thermistor (OST) Attachment (On Suction Tube)

This unit uses a 5 VDC output low pressure transducer that provides a 0-5VDC data for interpretation by the control board a 0 to 200 psig range of pressure at the suction tube.

Signals used by control board for:

- Low pressure cut-out
- Loss of charge management,
- Compressor overall envelope management
- Oil circulation management
- Lubrication management and
- EXV control.

Type: 10K negative temperature coefficient temperature sensor.

Therm-O-Disc part number HH79NZ092 used for EXV control

Electronic Expansion Valve

Fig. 2 – Electronic Expansion Valve (EXV)

An EXV is used for accurate refrigerant metering in the heating mode. It enables the system to achieve high HSPF rating.

The outdoor board senses suction pressure and temperature to control EXV movement.

The EXV has a stepper motor with 600 steps from fully open to fully closed

Cooling

Valve is wide open

Heating

At start of each cycle, valve controls to a fixed position depending on speed and ambient temperature for 120 seconds. This allows the refrigerant system to stabilize. After this "pre-set" period, control board controls valve as needed to control suction superheat and/or compressor load.

Defrost

Valve is wide open

Controller

The variable speed Heat Pump (VS HP) controller is a serially communicating device that receives capacity demands from the Evolution User Interface and communicates corresponding speed request to the Inverter Drive, which controls compressor to the speed demanded.

The VS HP Control also controls the EXV to either provide superheat or act as a load-shedding tool.

The VS HP Control also proactively tries to prevent fault trip events by using sensors and Inverter feedback. Sensors include a suction pressure transducer (SPT), an outdoor suction thermistor (OST), the outdoor air thermistor (OAT), outdoor coil thermistor (OCT), high pressure switch (HPS) etc.

Features:

- Serially Communicating
- 2 or 3 Wire
- DX+, DX-
- Ground (optional)
- Capacity Feedback
- Ambient Optimized Speed Ranges
- Proactive Fault Prevention
- Automatic Load Shedding
- Heating Superheat Control with EXV
- Intelligent Defrost
- Low Ambient Cooling
- Hold at compressor speed on start-up
- User Interface holds demand to minimum for 5 minutes

Motor Control Drive (Inverter):

- Converts the sinusoidal AC input mains voltage into a variable frequency AC output generated used PWM modulation of the output.
- Drive adjusts the output voltage to run the compressor at the correct speed at any load point in the envelope.
- The drive actively controls the motor current to insure the proper torque is provided for the given loading condition.
- The drive control algorithms insure the magnetic field set up in the motor is synchronized with the rotor insuring smooth efficiency operation.
- The drive actively controls the input current at heavy loading conditions to insure the input power factor to the drive is >0.95.

Compressor Brushless Permanent Magnet Motor (BPM):

- The motor inductance reacts to the drive current and a sinusoidal current is induced through the motor windings.
- The sinusoidal current sets a rotating magnetic field, at the frequency set by the drive.
- The magnets enable the motor to synchronize to that frequency, set by the drive.
- Supplies the mechanical power afforded to it by the drive voltage, current and frequency.

Motor Control Drive + BPM together:

- Through the combination of the drive and motor, the system is able to operate over a wide speed range.
- The drive provides protection of the system to various abnormal conditions including limiting the compressor envelope of operation to appropriate boundaries.
- Provides many pieces of system data as feedback to the system controller.
- Allows operation at least than full performance in case of system faults or issues.

Crankcase Heater Operation

This unit has an internal crankcase heater that will be energized during the off cycle and is intelligently demanded by the system to prevent the compressor from being the coldest part of the system thus enhancing the reliability. The crankcase heater will function as needed any time the outdoor unit is powered. The indoor unit and UI do not need to be installed for the crankcase heater to operate properly.

NOTE: Contactor may close intermittently without the unit starting. This is done to determine whether the control needs to energize the crankcase heater. Closing the contactor powers the inverter and allows the system to check compressor temperature.

Outdoor Fan Motor Operation

The outdoor unit control (Fig. 3) energizes outdoor fan anytime compressor is operating, except for defrost and as needed during low-ambient cooling operation. The outdoor fan remains energized if a pressure switch opens or compressor scroll over temperature should occur. This OD fan is an ECM motor which operates at varying speeds depending on the ambient and the demand.

Time Delays

The unit time delays include:

- Five minute time delay to start cooling or heating operation when there is a call from the user interface. To bypass this feature, momentarily short and release Forced Defrost pins.
- Five minute compressor re-cycle delay on return from a brown-out condition.

Evolution Controlled Low Ambient Cooling

This unit is capable of low ambient cooling down to 0°F (-17.8°C) with Low Ambient enabled on the Evolution Control. A low ambient kit is not required. The only accessory that may be required is wind baffles in locations which are likely to experience cross winds in excess of 5 miles an hour. This generally occurs only on roof and open area applications. The Evolution Control provides an automatic evaporator freeze thermostat. Low ambient cooling must be enabled in the User Interface setup. Fan may not begin to cycle until about 40°F (4.4°C) OAT. Fan will cycle based on coil and outdoor air temperature.

Evolution controlled low ambient mode operates as follows:

- Fan is OFF when outdoor coil temperature is too low (+ 55°F/12.7°C), the saturated suction pressure indicates a freezing indoor coil or outdoor fan has been ON for 30 minutes. (Fan is turned off to allow refrigerant system to stabilize.)
- Fan is ON when outdoor coil temperature is too high (+80°F/26.7°C), the high side pressure is too high or if outdoor fan has been OFF for 30 minutes. (Fan is turned on to allow refrigerant system to stabilize)
- Low pressure indication by the suction pressure transducer is ignored for first 3 minutes during low ambient start up. After 3 minutes, if low pressure trip occurs, then outdoor fan motor is turned off for 10 minutes, with the compressor running. If pressure condition is satisfied within 10 minutes then cooling continues with the outdoor fan cycling per the coil temperature routine listed above for the remainder of the cooling cycle. If the suction pressure condition is not satisfied within 10 minutes, then the normal trip response (shut down cooling operation and generate LP trip error) will occur.

Utility Interface With Evolution Control

The utility curtailment relay should be wired between the two UTIL connections on the control board for this Evolution Communicating System. This input allows a power utility device to interrupt compressor operation during peak load periods. When the utility sends a signal to shut the system down, the User Interface will display, "Curtailment Active". See UI installation instructions for setup details.

Communication and Status Function Lights

Evolution Control, Green Communications (COMM)Light

A green LED (**COMM light**) on the outdoor board (see Fig. 3) indicates successful communication with the other system products. The green LED will remain OFF until communication is established. Once a valid command is received, the green LED will turn ON continuously. If no communication is received within 2 minutes, the LED will be turned OFF until the next valid communication.

Amber Status Light

Amber colored **STATUS light** indicates operation and error status. See Table 5 and Table 6 for definitions.

- Two minute time delay to return to standby operation from last valid communication.
- One minute time delay of outdoor fan at termination of cooling mode when outdoor ambient is greater than or equal to 100°F (37.8°C).
- Fifteen second delay at termination of defrost before the auxiliary heat is de-energized.

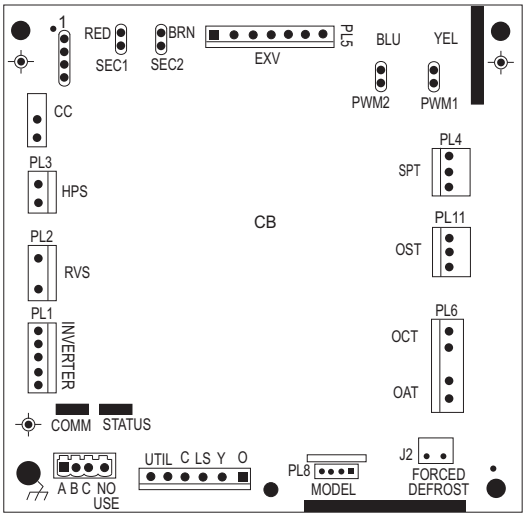

A11139

Fig. 3 – Variable Speed Control Board

Defrost

This user interface (UI) offers 5 possible defrost interval times: 30, 60, 90, 120 minutes, or AUTO. The default is AUTO.

Defrost interval times: 30, 60, 90, and 120 minutes or AUTO are selected by the Evolution Control User Interface (dip switches are not used.)

AUTO defrost adjusts the defrost interval time based on the last defrost time as follows:

- When defrost time <3 minutes, the next defrost interval=120 minutes.
- When defrost time 3-5 minutes, the next defrost interval=90 minutes.
- When defrost time 5-7 minutes, the next defrost interval=60 minutes.
- When defrost time >7 minutes, the next defrost interval=30 minutes.

The control board accumulates compressor run time. As the accumulated run time approaches the selected defrost interval time, the control board monitors the coil temperature sensor for a defrost demand. If a defrost demand exists, a defrost cycle will be initiated at the end of the selected time interval. A defrost demand exists when the coil temperature is at or below 32°F (0°C) for 4 minutes during the interval. If the coil temperature does not reach 32°F (0°C) within the interval, the interval timer will be reset and start over.

- Upon initial power up the first defrost interval is defaulted to 30 minutes. Remaining intervals are at selected times.
- Defrost is only allowed to occur below 50°F (10°C) outdoor ambient temperature.

The defrost cycle is terminated as described below.

- When OAT is > 30°F (-1.1 °C), defrost terminates if outdoor coil temperature (OCT) > 50°F (+10°C)
- When OAT is </= 30°F (-1.1°C), defrost terminates if outdoor coil temperature (OCT) > 40 °F (+4.4°C)
- Or 10 minutes has passed.

At the defrost termination, the outdoor fan output (ODF) will turn on 15 seconds before the reversing valve switching.

NOTE: Compressor speed during defrost varies based on outdoor conditions.

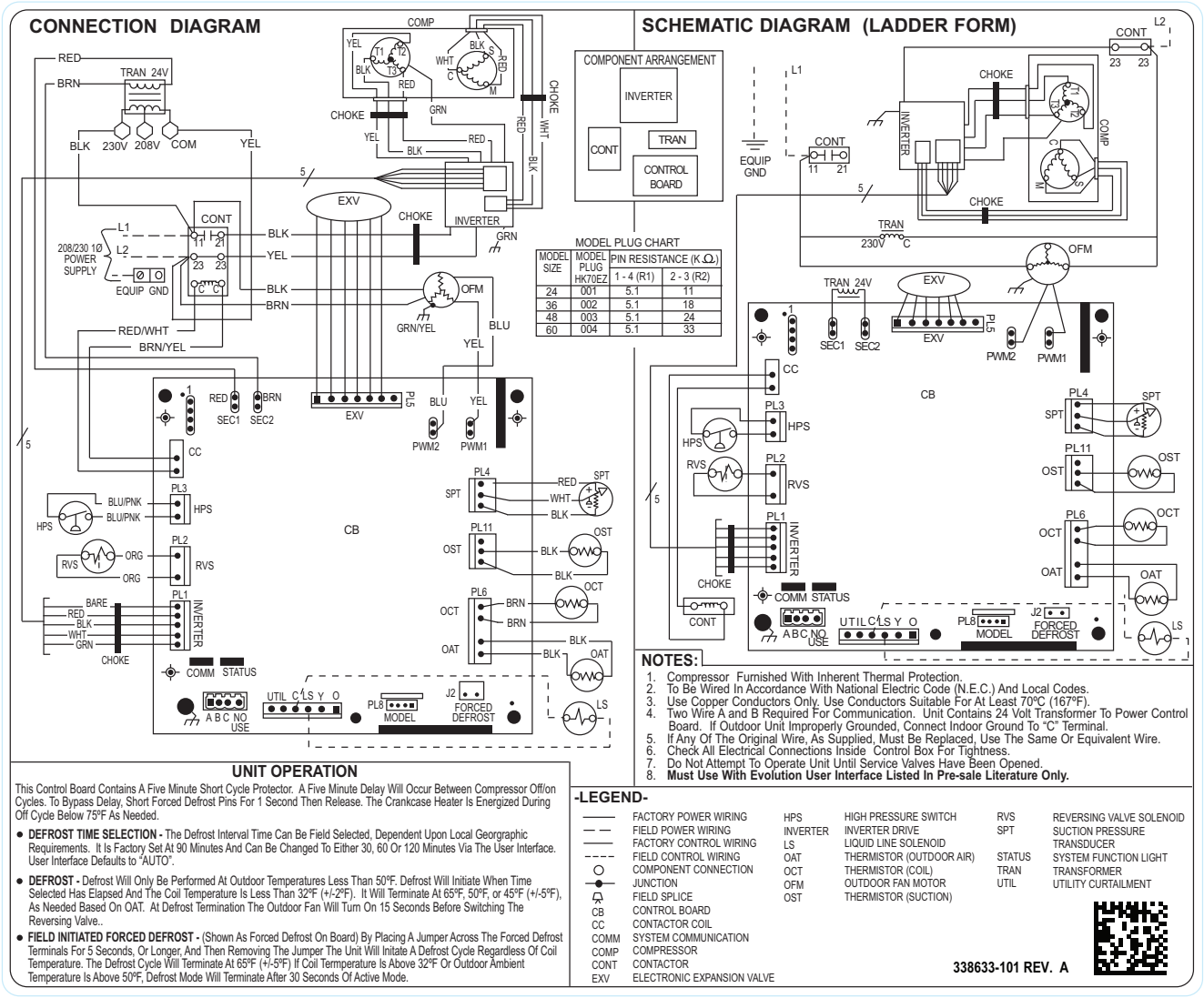

Fig. 4 – Wiring Diagram — 280ANV Model sizes 2 - 5 tons, 208/230-1

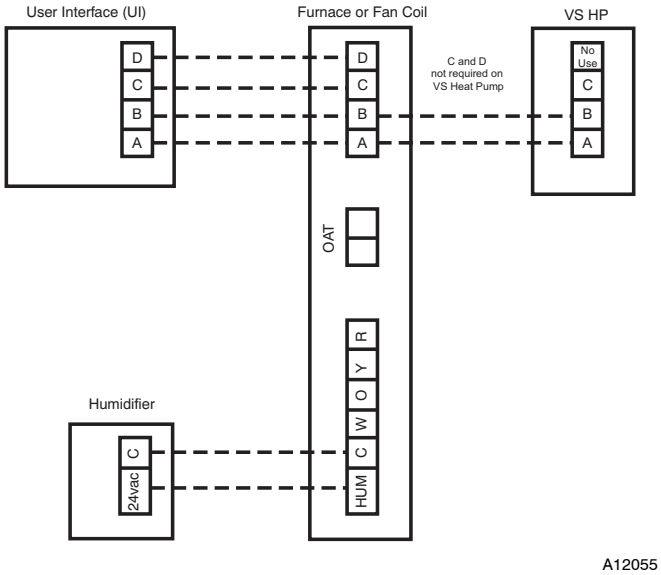

Fig. 5 – Evolution Furnace or Fan Coil Wiring with Communicating Variable Speed HP

REFRIGERANT PIPING LENGTH LIMITATIONS

Maximum Line Lengths:

The maximum allowable total equivalent length for heat pumps varies depending on the vertical separation. See the tables below for allowable lengths depending on whether the outdoor unit is on the same level, above or below the outdoor unit.

MAXIMUM LINE LENGTHS FOR HEAT PUMP APPLICATIONS

	MAXIMUM ACTUAL LENGTH ft (m)	MAXIMUM EQUIVALENT LENGTH† ft (m)	MAXIMUM VERTICAL SEPARATION ft (m)
Units on equal level	200 (61)	250 (76.2)	N/A
Outdoor unit ABOVE indoor unit	200 (61)	250 (76.2)	200 (61)
Outdoor unit BELOW indoor unit	See Table *'Maximum Total Equivalent Length: Outdoor Unit BELOW Indoor Unit'*		

† Total equivalent length accounts for losses due to elbows or fitting. See the Long Line Guideline for details.

Maximum Total Equivalent Length† - Outdoor Unit BELOW Indoor Unit

Size	Liquid Line Diameter w/ TXV	HP with Puron® Refrigerant – Maximum Total Equivalent Length† Vertical Separation ft (m) Outdoor unit BELOW indoor unit;						
		0 – 20 (0 – 6.1)	21 – 30 (6.4 – 9.1)	31 – 40 (9.4 – 12.2)	41 – 50 (12.5 – 15.2)	51 – 60 (15.5 – 18.3)	61 – 70 (18.6 – 21.3)	71 – 80 (21.6 – 24.4)
024 HP with Puron	3/8	250*	250*	250*	250*	250*	250*	250*
036 HP with Puron	3//8	250*	250*	250*	250*	250*	250*	250*
048 HP with Puron	3/8	250*	250*	250*	250*	230	160	– –
060 HP with Puron	3/8	250*	225*	190	150	110	– –	– –

*** Maximum actual length not to exceed 200 ft (61 m)**

† Total equivalent length accounts for losses due to elbows or fitting. See the Long Line Guideline for details.

– – = outside acceptable range

LONG LINE APPLICATIONS

An application is considered Long Line when the refrigerant level in the system requires the use of accessories to maintain acceptable refrigerant management for systems reliability. Defining a system as long line depends on the liquid line diameter, actual length of the tubing, and vertical separation between the indoor and outdoor units.

For Heat Pump systems, the chart below shows when an application is considered Long Line. Beyond these lengths, long line accessories are required:

HP WITH PURON® REFRIGERANT LONG LINE DESCRIPTION ft (m)
Beyond these lengths, long line accessories are required

Liquid Line Size	Units On Same Level	Outdoor Below Indoor	Outdoor Above Indoor
3/8	80 (24.4)	20 (6.1) vertical or 80 (24.4) total	80 (24.4)

Note: See Long Line Guideline for details

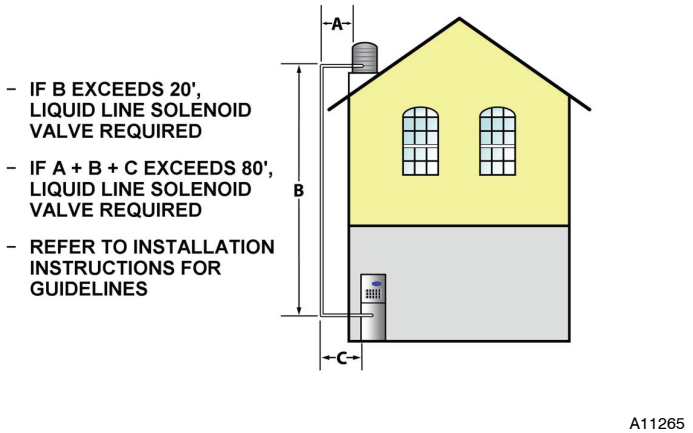

Fig. 6 – Long Line Application

External Muffler

Factory Supplied Muffler (part # LM10KK003) Installation is Required On Every Installation:

- A muffler is required to reduce noise transmitted to indoor through the line set.
- Muffler must be installed outside the dwelling. Muffler can also be installed in vertical configuration for space consideration maintaining a minimum of 12 in (304.8 mm) straight pipe section to the closest bend.
- Maintain at least 12 in. (304.8 mm) straight pipe length to the muffler shell inlet and from the outlet stubs.
- To prevent rusting, provide sufficient clearance between the muffler and the ground surface. Also, position the muffler such that accidental abuse (such as by a weed trimmer, lawn mower etc.) of the painted surface is avoided.
- Insulating the muffler with Armaflex ™ tape is recommended.

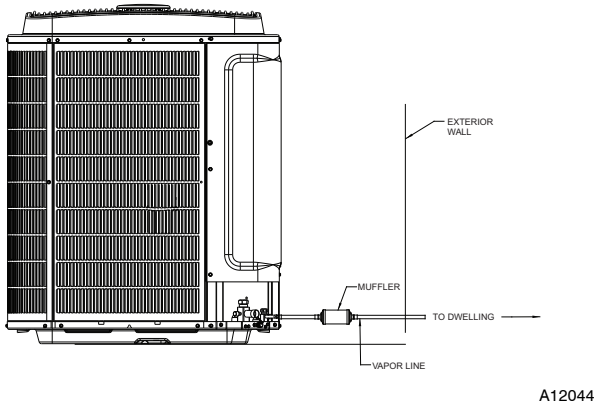

Fig. 7 – Muffler Installation

Table 1—MIN/MAX AIRFLOW

The indoor airflow delivered by this system varies significantly based on outdoor temperature, indoor unit combination, and system demand. The air flows on these tables are for duct design considerations. Duct systems capable of these ranges will ensure the system will deliver full capacity at all outdoor temperatures. Minimum and maximum air flows can be adjusted from these numbers in the Evolution Control Heat Pump Setup screen.

Cooling – Comfort Mode			Minimum Cooling (Dehum or Zoning)
Size	Max Capacity	Min Capacity	
24	726	651	398
36	1168	651	398
48	1394	1186	693
60	1650	1186	693

Cooling – Efficiency Mode		
Size	Max Capacity	Min Capacity
24	949	830
36	1334	830
48	1593	1355
60	1885	1355

Heating – Comfort Mode		
Size	Max Capacity	Min Capacity
24	698	440
36	1140	451
48	1354	751
60	1354	751

Heating – Efficiency Mode		
Size	Max Capacity	Min Capacity
24	900	750
36	1350	518
48	1600	890
60	1750	901

TROUBLESHOOTING

Systems Communication Failure

If communication with the Evolution control is lost with the User Interface (UI), the control will flash the appropriate fault code (see Table 5 and Table 6). Check the wiring to the User Interface and the indoor and outdoor units and power.

Model Plug

Each control board contains a model plug. The correct model plug must be installed for the system to operate properly (see Table 2).

Table 2—Model Plug Information

MODEL NUMBER	MODEL PLUG NUMBER	PIN RESISTANCE (K–ohms)	
		Pins 1–4	Pins 2–3
280ANV024	HK70EZ001	5.1K	11K
280ANV036	HK70EZ002	5.1K	18K
280ANV048	HK70EZ003	5.1K	24K
280ANV060	HK70EZ004	5.1K	33K

The model plug is used to identify the type and size of unit to the control.

On new units, the model and serial numbers are input into the board's memory at the factory. If a model plug is lost or missing at initial installation, the unit will operate according to the information input at the factory and the appropriate error code will flash temporarily. An RCD replacement board contains no model and serial information. If the factory control board fails, the model plug must be transferred from the original board to the replacement board for the unit to operate.

NOTE: The model plug takes priority over factory model information input at the factory. If the model plug is removed after initial power up, the unit will operate according to the last valid model plug installed, and flash the appropriate fault code temporarily.

Pressure Switch Protection

The outdoor unit is equipped with high pressure switch. If the control senses the opening of a high pressure switch, it will respond as follows:

1. De-energize the contactor.
2. Keep the outdoor fan operating for 15 minutes.
3. Display the appropriate fault code (see Table 5 and Table 6).
4. After a 15 minute delay, if there is a call for cooling or heating and HPS is reset, the contactor is energized.
5. If HPS has not closed after a 15 minute delay, the outdoor fan is turned off. If the open switch closes anytime after the 15 minute delay, then resume operation with a call for cooling or heating at a temporary reduced capacity.
6. If HPS trips 3 consecutive cycles, the unit operation is locked out for 4 hours.
7. In the event of a high-pressure switch trip or high-pressure lockout, check the refrigerant charge, outdoor fan operation, and outdoor coil (in cooling) for airflow restrictions, or indoor airflow in heating.
8. In the event of a low-pressure trip or low-pressure lockout, check the refrigerant charge and indoor airflow (cooling) and outdoor fan operation and outdoor coil in heating.

Control Fault

If the outdoor unit control board has failed, the control will flash the appropriate fault code. The control board should be replaced.

If the sensors are out of range, the control will flash the appropriate fault code.

The thermistor comparisons are not performed during low ambient cooling or defrost operation.

Failed Thermistor Default Operation

Factory defaults have been provided in the event of failure of outdoor air thermistor (OAT) and/or outdoor coil thermistor (OCT).

If the OAT sensor should fail, low ambient cooling will not be allowed and the one-minute outdoor fan off delay will not occur. Defrost will be initiated based on coil temperature and time.

If the OCT sensor should fail, low ambient cooling will not be allowed. Defrost will occur at each time interval during heating operation, but will terminate after 5 minutes.

If there is a thermistor out-of-range error, defrost will occur at each time interval during heating operation, but will terminate after 5 minutes.

Count the number of short and long flashes to determine the appropriate flash code.

Outdoor Coil Thermistor

The outdoor coil thermistor is a 10Kohm resistor used for multiple system operations. It provides the coil/liquid line temperature to the heat pump board and user interface. Low ambient operation, defrost initiation, defrost termination and assistance with OAT temperature measurement of some of the functions. The sensor must be securely mounted to the tube connecting the EXV and distributor. See Fig.9 for proper placement.

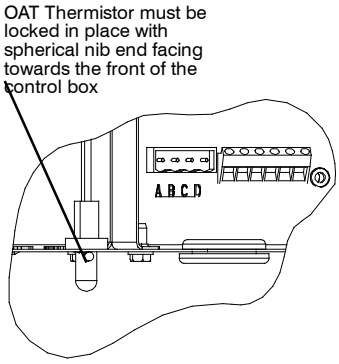

A11142

Fig. 8 – OAT Thermistor Location (Bottom of Control Box)

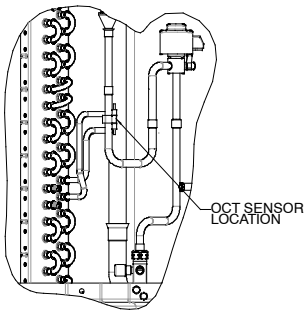

A11143

Fig. 9 – Outdoor Coil Thermistor (OCT) Attachment (On Distributor Tube)

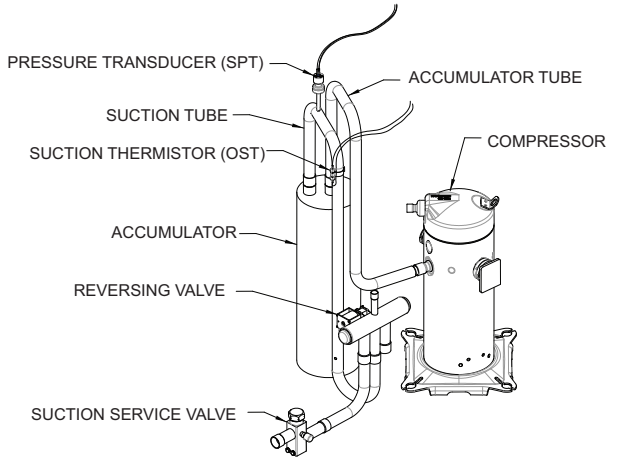

A11103

Fig. 10 – Suction Thermistor (OST) Attachment (On Suction Tube)

Suction Thermistor (OST)

Suction Thermistor is used for assisting in EXV control and must be secured on the suction tube and aligned longitudinally to the vertical surface of the tube axis (see Fig. 10).

Suction Pressure Transducer (SPT)

If the accuracy of the transducer is questioned, the technician can check it while it is attached to the VSHP board. Connect a gage manifold to the suction valve gage port fitting.

At the VSHP board, with the wire harness receptacle exposing a portion of the three pins on the VSHP board, a DC voltmeter can read the DC voltage between ground and supply (input) terminal. Ensure that the input voltage is 5 VDC. Next, read the DC voltage across the ground and output terminal. Record the output voltage.

The suction pressure that the pressure transducer is reading can be calculated by taking the output voltage and subtracting 0.5 from it then taking that difference and multiplying it by 50. Pressure (psig) = 50.0 x (DCV out - 0.5). For example, if the measured voltage is 3.0 VDC: 50 X (3.0 - 0.5) - 50 X 2.5 = 125 psig. See Fig. 11.

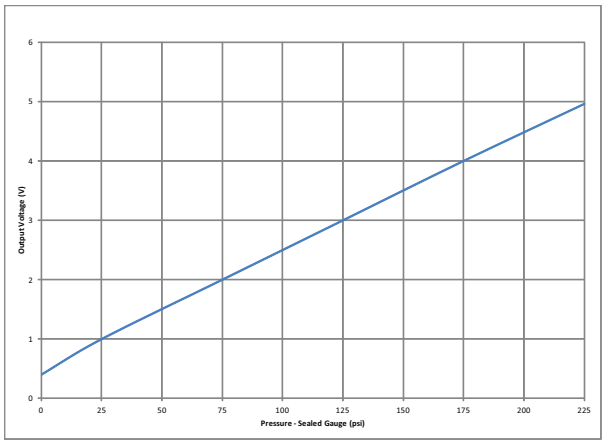

A12035

Fig. 11 – Suction Pressure Transducer (SPT) Output Funtion Graph

This can then be compared to the actual suction pressure from the gage manifold.

In the event of a low pressure trip or low pressure lockout , check the refrigerant for an under charge. If the charge is found to be correct, check for low indoor airflow in cooling and the outdoor fan for proper operation in heating and outdoor coil in heating for airflow restrictions. Keep in mind that the outdoor fan motor may run normally until it heats up.

Cool: PSUCT < 55 psig (for 3 minutes)
Heat: PSUCT < 23 psig (for 3 minutes)
PSUCT < 13 psig (instantaneous)

⚠ CAUTION

UNIT DAMAGE HAZARD

Failure to follow this caution may result in equipment damage or improper operation.

In order to minimize the ambient influence, make sure the thermistor curved surface hugs the pipe surface and is secured tight using the wire tie fished through the original slot insulating polymer body.

Variable Speed Compressor Sensor Output Terminals

This compressor has a motor thermistor and a scroll thermistor. Correct resistance between scroll thermistor terminal and common is 10k at 77°F (25°C). Correct resistance between motor thermistor terminal and common is 5k at 77°F (25°C). See Table 7.

Variable Speed Compressor Power Input Terminals

This compressor operates with a 3-phase variable frequency PWM variable voltage to the three fusite terminals.

Table 3—Variable Speed Compressor Resistances (winding resistance at 70°F ± 20°F)

WINDING	280ANV024 280ANV036	280ANV048 280ANV060
Between terminals T1, T2, and T3	.681	.203
Between terminal & ground	>1 mega OHM	>1 mega OHM

⚠ CAUTION

UNIT DAMAGE HAZARD

Failure to follow this caution may result in equipment damage and/or improper operation.

Do not use Meggar for measuring the winding resistance.

ECM Fan Motor

If verification of proper operation is required for the ECM motor used in this unit, follow these steps:

1. Verify that the 230v input to the transformer is present.
2. Verify that the control board is powered 18 volts to 30 volts from the transformer.
3. With the UI in charging mode in cooling, measure the DC voltage between the PWM 1 and PWM 2 terminals on the outdoor control board. The DC voltage and PWM (optional) measured must be as shown in Table 4.

Table 4—DC Voltage and PWM Measurement

Unit Size	Voltage	PWM
024, 036	8.9 VDC	52
048, 060	11.1 VDC	84

Table 5—Fault Codes

FAULT DESCRIPTION SENT TO UI	FLASH CODE (AMBER LED)	RESET TIME (minutes)
– –	Standby	ON, no flash
– –	Variable Capacity or Emergency Mode	1, pause
– –	Variable Speed Range Cutback	1 (2 sec ON), longer pause (1 second OFF)
Communications Loss	16	NA
Invalid Model	25	NA
High Pressure Switch Open	31	15
Low Pressure Trip	32	15
Control Fault	45	NA
Brownout	46	Revert to 5 min cycle delay
Lost Inverter Communications	48	Revert to 5 min cycle delay
230VAC Dropout–Reset Event	49	Revert to 5 min cycle delay
Outdoor Air Temp Sensor Fault	53	NA
Suction Temp Sensor Fault	54	15
Coil Temp Sensor Fault	55	NA
OAT–OCT Thermistor Out of range	56	NA
Suction Pressure Sensor Fault	57	15
OAT–OST Thermistor Out of range	58	5
Compressor Scroll Temp Out of Range	59	15
Compressor No Start*	62	15
Compressor Sump Heating Active	68	2 HOURS
Inverter / Compressor Internal Fault	69	15
Compressor Motor Temp Out of Range	71	15
Suction Over Temperature	72	15
Inverter Temp Out of Range Event	75	15
Inverter Over Current	77	15
Compressor No–Pump Event	79	15
Suction Over Temp Lockout	82	4 Hours
Low Pressure Lockout for 4 hours	83	4 HOURS
High Pressure Lockout for 4 hours	84	4 HOURS
Compressor Temp Lockout	85	4 HOURS
Compressor Temp Sensor Fault**	86	15
Inverter Temp Lockout	88	4 HOURS
Inverter VDC–Out Over Voltage	91	15
Inverter VDC–Out Under Voltage	92	15
230VAC Under Voltage	93	15
230VAC Over Voltage	94	15
High Current Lockout	95	2 HOURS
VDC Under Voltage Lockout	96	2 HOURS
VDC Over Voltage Lockout	97	2 HOURS
High Torque Event	98	10
High Torque Lockout	99	2 HOURS
– –	OFF	NA

* Fault code present on software version 6 and later.

** Fault code present on software version 5 and earlier.

Status Codes

Most system problems can be diagnosed by reading the status code as flashed by the amber status light on the control board.

The codes are flashed by a series of short and long flashes of the status light. The short flashes indicate the first digit in the status code, followed by long flashes indicating the second digit of the error code.

The short flash is 0.25 seconds ON and the long flash is 1.0 second ON. Time between flashes is 0.25 seconds. Time between short flash and first long flash is 1.0 second. Time between code repeating is 2.5 seconds with LED OFF.

Codes are easily read from user interface (UI)

EXAMPLE:

3 short flashes followed by 2 long flashes indicates a 32 code.

Table 6—280ANV EVENT / FAULT

OPERATION	FLASH CODE (Amber LED)	Heat or Cool Mode	Possible Causes	ACTION
Standby/Charging	ON, no flash	– – –	– – –	– – –
Variable Capacity	1, pause	– – –	– – –	– – –
Variable Capacity (Range Cutback)	1 (1 sec ON), longer pause (2 second OFF)	Both	Pressure Trip Cutback: 2 or more High Pressure Trips occurred in past 2 hours	System will self–mitigate, persistent conditions will lead to lockout (refer to Error Code 84)
			High Load Cut back: 2 or more Torque Limit Trips occurred in the past 2 hours	System will try to self–mitigate, persistent conditions will lead to lockout (refer to Error Code 99)
			Flank Loading Cutback: Flank Load is too high, ODU raising speed (shrinking capacity range) to improve reliability	System will try to self–mitigate, persistent conditions will lead to lockout (refer to Error Code 99)
		Heat	Oil Circulation cutback: Suction Pressure too high for current compressor speed; ODU reducing speed to improve oil circulation	check for Indoor airflow restrictions
Emergency Mode	Continuous Flash	Both	Regular T–Stat used in Emergency mode: Nominal Capacity only (fixed speed operation)	install Evolution User Interface
Event	16	Both	Loose wire or shorted leads	Verify communications wiring (ABCD); check for loose connection, stripped wires, short to ground or short between wires
			Wrong Model Plug Installed	Verify correct model plug installed
			Damaged Model Plug	Check model plug for corrosion or breakage; replace if necessary
			Data Bus locked up by power loss, brownout or glitch	Cycle Power to system
			Damaged ODU control	Replace ODU control
Event	25	Both	Wrong Model Plug Installed	Verify correct model plug installed
			Damaged Model Plug	Check model plug for corrosion or breakage; replace if necessary
			Damaged ODU control	Replace ODU control
Event	31	Both	High Pressure Event	System will self–mitigate, persistent conditions will lead to lockout (refer to Error Code 84)
Event	32	Both	Low Pressure Event	System will self–mitigate, persistent conditions will lead to lockout (refer to Error Code 83)
System Malfunction	45	Both	Damaged ODU control	Replace ODU control
Event	46	Both	low line voltages	if persistent contact power provider
System Malfunction	48	Both	Loose or disconnected harness (CC @ HP control, CC @ contactor, INVERTER @ HP control, INVERTER @ inverter drive)	Verify good harness connection
			Loose wire or shorted leads	Verify communications wiring (”Inverter” harness); check for loose connection, stripped wires, short to ground or short between wires; confirm good connection is made at control board and at Inverter
			Contactor not pulled in	Verify contactor harness from ODU control (”CC” harness); check for loose connection, stripped wires, short to ground or short between wires; confirm good connection is made at control board and at contactor
			Damaged Contactor Coil	if wiring is ok measure across the contactor coil for 18VAC – 32VAC; if voltage is present measure across contactor terminals 21 & 23 for line voltage if absent then contactor is damaged
			Damaged ODU Control	confirm ~5VDC on pins 3 & 4 of ”Inverter” pin out connection on ODU control if absent board is damaged
			Possible damage to Inverter Drive	Change out ODU control before Inverter Drive; if this does not help then change out the Inverter drive

280ANV EVENT / FAULT (CONT.)

OPERATION	FLASH CODE (Amber LED)	Heat or Cool Mode	Possible Causes	ACTION
Event	49	Both	Contactor dropping out momentarily	Verify contactor harness from ODU control (”CC” harness); check for loose connection, stripped wires, short to ground or short between wires; confirm good connection is made at control board and at contactor
			Voltage glitches and low line voltages	if persistent contact power provider
			Damaged Inverter Drive	Change out ODU control before Inverter Drive; if this does not help then change out the Inverter drive
Fault	53	Both	Sensor Harness not connected to ODU control	Ensure plug is connected to ODU control
			Broken or loose harness wire	Check harness for continuity; resistance should measure 10 k at 77 +/– 20º F. Refer to thermistor 10 k thermistor curve. If bad, replace OAT/OCT thermistor sensor assembly
			Broken or Damaged Sensor	Check harness for continuity; resistance should measure 10 k at 77 +/– 20º F. Refer to thermistor 10 k thermistor curve. If bad, replace OAT/OCT thermistor sensor assembly
			Hardware damage to ODU control	Replace ODU control
Fault	54	Both	Sensor Harness not connected to ODU control	Ensure plug is connected to ODU control
			Broken or loose harness wire	Check harness for continuity; resistance should measure 10 k at 77 +/– 20º F. Refer to thermistor 10 k thermistor curve. If bad, replace OST sensor
			Suction Thermistor not properly attached or in wrong location	Ensure Sensor is properly attached to the accumulator entry–tube
			Broken or Damaged Sensor	Check harness for continuity; resistance should measure 10 k at 77 +/– 20º F. Refer to thermistor 10 k thermistor curve. If bad, replace OST sensor
			Hardware damage to ODU control	Replace ODU control
Fault	55	Both	Sensor Harness not connected to ODU control	Ensure plug is connected to ODU control
			Broken or loose harness wire	Check harness for continuity; resistance should measure 10 k at 77 +/– 20º F. Refer to thermistor 10 k thermistor curve. If bad, replace OAT/OCT thermistor sensor assembly
			Coil Thermistor not properly attached or in wrong location	Ensure Sensor is properly clipped to the distributor entry–tube
			Broken or Damaged Sensor	Check harness for continuity; resistance should measure 10 k at 77 +/– 20º F. Refer to thermistor 10 k thermistor curve. If bad, replace OAT/OCT thermistor sensor assembly
			Hardware damage to ODU control	Replace ODU control
Event	56	Both	Coil Thermistor not properly attached or in wrong location	Ensure Sensor is properly clipped to the distributor entry–tube
			Outdoor Ambient Temperature sensor improperly installed (sensor body may be in contact with sheet metal)	Properly install OAT sensor
Fault	57	Both	Sensor Harness not connected to ODU control	Ensure plug is connected to ODU control
			Broken or loose harness wire	Check harness for stripped wires, shot to ground or short between wires.
			Electrical short destroyed Transducer electronics	Compare transducer voltage reading to gauge reading at service valve (see Transducer Output Function graph); Check system for electrical shorts and correct; replace transducer.
			Heat damage during brazing	Compare transducer reading to gauge reading at service valve (see transducer measurement chart); replace transducer
Event	58	Both	Suction Thermistor not properly attached or in wrong location	Ensure plug is properly attached to suction tube
			Broken or loose harness wire	Check harness for continuity; resistance should measure 10 k at 77 +/– 20º F. Refer to thermistor 10 k thermistor curve. If bad, replace OST thermistor sensor assembly

280ANV EVENT / FAULT (CONT.)

OPERATION	FLASH CODE (Amber LED)	Heat or Cool Mode	Possible Causes	ACTION
Event	58	Both	Outdoor Air Thermistor Issue	See Error 53 and\or Error 56
Event	59	Cool	Outside Normal Operating Range (e.g. improper load calculation, system match issue, outside cooling range etc)	Consult Application Guidelines
			Service Valve left closed (Liquid or Vapor)	Ensure Service Valves are open
			Undercharged System	Check system subcooling to determine charge status, if low add charge using Charging Mode (follow proper charging procedures)
			Indoor Airflow too low or off	Check Indoor for clogging (ice or debris) and clean or de−ice if necessary; Troubleshoot Indoor fan motor and make sure it is working; follow Indoor Airflow troubleshooting instruction
			Restriction in Filter Drier plus Long Line Application and filter drier on Indoor Unit	Clean System (refer to application guideline) and replace filter drier
			Restriction due to debris	Clean System (refer to application guideline) and replace filter drier
			Restriction in Circuits or Tubing	Check kinks and straighten or replace circuits
		Both	Restriction in Filter Drier plus filter drier on Outdoor Unit	Clean System (refer to application guideline) and replace filter drier
		Both	Expansion Orifice Restriction	If short lineset (less than 15 ft) Troubleshoot TXV (see guide below); replace if necessary
		Heat		Troubleshoot EXV (see guide below)
			Outside Normal Operating Range (e.g. improper load calculation, system match issue, outside heating range etc)	Consult Application Guidelines
			Service Valve left closed (Liquid Service Valve)	Ensure Liquid Service Valve is open
			Outdoor Airflow too low or off	Check Outdoor for clogging (ice or debris) and clean or de−ice if necessary; Troubleshoot Outdoor fan motor and make sure it is working; follow Outdoor Airflow troubleshooting instruction
			Undercharged System	Check charge in cooling (if in Cooling Charge Mode Ambient Range), if low add charge using Charging Mode (follow proper charging procedures); if out side cooling charge mode range, pull out charge, weigh in using heating charge mode
			Reversing Valve Bypass	Reversing Valve Stuck halfway; troubleshoot reversing valve
			Restriction due to debris	Clean System (refer to application guideline) and replace filter drier
Event	62*	Both	High pressure differential between high and low side due to OAT	System will retry to start after reset time while the pressures equalize
				Check white barcode label on inverter for DSP MAIN version, V29.12.0 (24 & 36) or V29.11.0 (48 & 60). If the version number is less, change inverter kit to latest RC part number.
			Mechanical compressor damage	Replace compressor
Event	68	Both	Loss of power while EXV is open leading to charge migration to compressor sump	Nothing; system is warming up compressor sump temperature. Might take up to 2 hours thus secondary heat might be requested if necessary.
			EXV harness not connected to ODU control	Check harness connection to ODU control
			EXV coil not connected to EXV	Check EXV coil and ensure it is well seated
			TXV failed open	Check TXV operation and replace if necessary
			Inverter PFC Thermistor sensor failed open	Replace Inverter

* Fault code present on software version 6 and later. See TIC2014−0008.

280ANV EVENT / FAULT (CONT.)

OPERATION	FLASH CODE (Amber LED)	Heat or Cool Mode	Possible Causes	ACTION
System Malfunction	69	Both	Noisy Line Voltage	Check line wiring and ensure proper contacts (disconnects etc)
			Short Circuit in system	Check for system short circuit (loose wire, damaged contacts etc)
			Compressor Winding Damage	Check compressor winding resistances; See Compressor Troubleshooting
			Inverter Damaged	Check for system short circuit (loose wire, damaged contacts etc); Replace Inverter
Event	71	Cool	Shorted sensor circuit	Troubleshoot the compressor motor thermistor. Compressor sensor fusite should measure 5 kohm between motor and common terminals.
Event	72	Cool	High Suction Gas Temperature	System will try to ride through current spikes and self−recover in trip condition; persistent over current trips will lead to Error 82 ”Suction Over Temp Lockout” (Refer to Error 82 troubleshooting)
Event	75	Both	Outdoor Airflow too low or off	Check ODU coil for clogging (ice or debris) and clean if necessary; Troubleshoot ODU fan motor and make sure it is working
			Blocked Inverter Heat Exchanger (fins)	Check Inverter fins for debris and clean if necessary
			Application violates guideline	Consult Application Guideline for compliance
Event	77	Both	High Current Spikes in current measured by the Inverter drive	System will try to ride through current spikes and self−recover in trip condition; persistent over current trips will lead to Error 95 ”High Current Lockout” (Refer to Error 95 troubleshooting)
Event	79	Both	Inverter Output to Compressor leads miswired leading to compressor running backwards	check wiring at Inverter outputs
			Inverter Output to Compressor leads not attached	check wiring at Inverter outputs
			Reversing Valve Bypass	Reversing Valve Stuck halfway; troubleshoot reversing valve
			Compressor Winding damage	Troubleshoot compressor windings. For the 2 and 3T the resistance should be .681 ohm and for 4 and 5T the resistance should be .203 ohm at 70F +/−20F. See compressor troubleshooting guidelines. If confirmed replace compressor
System Malfunction	82	Cool	Overcharge, Attic run lineset and High Load conditions	Verify charge by putting in cooling charging mode
			Outside Normal Operating Range (e.g. improper load calculation, system match issue, outside cooling range etc)	Consult Application Guidelines

280ANV EVENT / FAULT (CONT.)

OPERATION	FLASH CODE (Amber LED)	Heat or Cool Mode	Possible Causes	ACTION
System Malfunction	83	Cool	Cooling in Low Ambient region (55 °F and below) with "Low Ambient Cooling Control" disabled	Enable "Low Ambient Cooling" via user interface
		Cool	Outside Normal Operating Range (e.g. improper load calculation, system match issue, outside cooling range etc)	Consult Application Guidelines
		Cool	Service Valve left closed (Liquid or Vapor)	Ensure Service Valves are open
		Cool	Undercharged System	Check system subcooling to determine charge status, if low add charge using Charging Mode (follow proper charging procedures)
			Indoor Airflow too low or off	Check Indoor for clogging (ice or debris) and clean or de–ice if necessary; Troubleshoot Indoor fan motor and make sure it is working; follow Indoor Airflow troubleshooting instruction
			Restriction in Filter Drier plus Long Line Application and filter drier on Indoor Unit	Clean System (refer to application guideline) and replace filter drier
			Restriction due to debris	Clean System (refer to application guideline) and replace filter drier
			Restriction in Circuits or Tubing	Check kinks and straighten or replace circuits
		Both	Restriction in Filter Drier plus filter drier on Outdoor Unit	Clean System (refer to application guideline) and replace filter drier
			Expansion Orifice Restriction	If short lineset (less than 15 ft) Troubleshoot TXV (see guide below); replace if necessary
		Heat		Troubleshoot EXV (see guide below)
			Outside Normal Operating Range (e.g. improper load calculation, system match issue, outside heating range etc)	Consult Application Guidelines
			Service Valve left closed (Liquid Service Valve)	Ensure Liquid Service Valve is open
			Outdoor Airflow too low or off	Check Outdoor for clogging (ice or debris) and clean or de–ice if necessary; Troubleshoot Outdoor fan motor and make sure it is working; follow Outdoor Airflow troubleshooting instruction
			Undercharged System	Check charge in cooling (if in Cooling Charge Mode Ambient Range), if low add charge using Charging Mode (follow proper charging procedures); if outside cooling charge mode range, pull out charge, weigh in using heating charge mode
			Reversing Valve Bypass	Reversing Valve Stuck halfway; troubleshoot reversing valve
			Restriction due to debris	Clean System (refer to application guideline) and replace filter drier

280ANV EVENT / FAULT (CONT.)

OPERATION	FLASH CODE (Amber LED)	Heat or Cool Mode	Possible Causes	ACTION
System Malfunction	84	Both	Outside Normal Operating Range (e.g. improper load calculation, system match issue, outside cooling range, outside heating range etc)	Consult Application Guidelines
			loose High Pressure Switch harness leads	Check HPS harness
			Pressure Switch disconnected from ODU Control Board	Check HPS connection on ODU control
			Faulty Pressure Switch	Check Discharge pressure with gauge, if less than 610 +/− 20 psig and switch is open (measure resistance) then replace pressure switch
			Restriction due to debris leading to Overcharge when charging in Cooling mode	Clean System (refer to application guideline) and replace filter drier
			Restriction in EXV plus Long Line Application leading to Overcharge when charging in Cooling mode	If long line, troubleshoot EXV
			None condensible leading to high load	Clean System (refer to application guideline) and replace filter drier
		Cool	Service Valve left closed (Liquid or Vapor)	Ensure Service Valves are open
			Overcharged System	Check system charge using Cooling Charging Mode (follow proper charging procedures)
			Outdoor Airflow too low or off	Check Outdoor Coil for clogging (ice or debris) and clean or de−ice if necessary; Troubleshoot Outdoor fan motor and make sure it is working; follow Outdoor Airflow troubleshooting instruction
			Restriction in Filter Drier plus Long Line Application and filter drier on Outdoor Unit	Clean System (refer to application guideline) and replace filter drier
			Restriction in EXV plus Overcharge	troubleshoot EXV
			Restriction in Circuits or Tubing	Check kinks and straighten or replace circuits
		Heat	Electric Heater plus Heat pump application: Electric Heater stuck on	If User Interface is not requesting Electric Heat check for heater relays, if on troubleshoot Electric Heater
			Furnace plus Heat pump application: Furnace stuck on	If not in Defrost and Furnace is running same time as heat pump, troubleshoot Furnace
			Restriction in Filter Drier plus Long Line Application and filter drier on Indoor Unit	Clean System (refer to application guideline) and replace filter drier
			Expansion Orifice Restriction	Troubleshoot TXV (see guide below)
				Troubleshoot EXV (see guide below)
			Service Valve left closed (Vapor Service Valve)	Ensure Vapor Service Valve is open
			Indoor Airflow too low or off	Check Indoor for clogging (ice or debris) and clean or de−ice if necessary; Troubleshoot Indoor fan motor and make sure it is working; follow Indoor Airflow troubleshooting instruction
			Overcharged System	Check charge in cooling (if in Cooling Charge Mode Ambient Range), if low add charge using Charging Mode (follow proper charging procedures); if out side cooling charge mode range, pull out charge, weigh in using heating charge mode
			Reversing Valve Stuck in Cooling	troubleshoot reversing valve
			Restriction due to debris	Clean System (refer to application guideline) and replace filter drier

280ANV EVENT / FAULT (CONT.)

OPERATION	FLASH CODE (Amber LED)	Heat or Cool Mode	Possible Causes	ACTION
System Malfunction	85	Both	Multiple Error 59 – "Compressor Scroll Temp Out of Range" within two hours of run time	System will try to ride through current spikes and self–recover in trip condition; persistent Error 59 – "Compressor Scroll Temp Out of Range" trips will lead to Error 88; (Refer to Error 59 troubleshooting)
			Multiple Error 71 – "Compressor Motor Temp Out of Range" within two hours of run time	System will try to ride through current spikes and self–recover in trip condition; persistent Error 71 – "Compressor Motor Temp Out of Range" trips will lead to Error 88; (Refer to Error 71 troubleshooting)
System Malfunction	86**	Both	Sensor Harness not connected to Inverter Drive control	Ensure plug is connected to Inverter Drive control
			Sensor plug not properly sited or not attached to compressor	Reattach sensor plug to compressor
			Broken or loose harness wire	Check harness for continuity; on the sensor fusite resistance should be in 10 kOhm between scroll and common terminals and 5 kOhm between motor and common terminals at 70 +/– 20 F. See compressor troubleshooting guidelines
			Failed Open/Close Compressor Internal Thermistor	Check harness for continuity; on the sensor fusite resistance should be in 10 kOhm between scroll and common terminals and 5 kOhm between motor and common terminals at 70 +/– 20 F. See compressor troubleshooting guidelines
System Malfunction	88	Both	Blocked Inverter Heat Exchanger (fins)	Check Inverter fins for debris and clean if necessary
			Outdoor Airflow too low or off	Check Evaporator (IDU in cooling, ODU in heating) for clogging (ice or debris) and clean if necessary; Troubleshoot Evaporator fan motor and make sure it is working
			Outdoor Unit airflow blocked (improper installation)	Consult Application Guidelines
		Cool	Outside Normal Operating Range (e.g. outside cooling ambient temperature range etc)	Consult Application Guidelines
		Heat	Outside Normal Operating Range (e.g. outside heating ambient temperature range etc)	Consult Application Guidelines
		Both	Inverter internal damage	Replace Inverter
Event	91	Both	High DC Voltage spikes in DC voltage measured by the Inverter drive	System will try to ride through voltage spikes and self–recover in trip condition; persistent over current trips will lead to Error 97 "High Voltage Lockout" (Refer to Error 97 troubleshooting)
Event	92	Both	Low DC Voltage dropouts in DC voltage measured by the Inverter drive	System will try to ride through voltage dropouts and self–recover in trip condition; persistent over current trips will lead to Error 96 "Low Voltage Lockout" (Refer to Error 96 troubleshooting)
Event	93	Both	Low AC Voltage dropouts in AC voltage measured by the Inverter drive	System will try to ride through voltage dropouts and self–recover in trip condition; persistent over current trips will lead to Error 96 "Low Voltage Lockout" (Refer to Error 96 troubleshooting)
Event	94	Both	High AC Voltage spikes in AC voltage measured by the Inverter drive	System will try to ride through voltage spikes and self–recover in trip condition; persistent over current trips will lead to Error 97 "High Voltage Lockout" (Refer to Error 97 troubleshooting)
System Malfunction	95	Both	High supply line voltage (> 257 VAC)	Check supply voltage to Outdoor Unit; if high contact utility provider
			Stormy weather causing intermittent voltage spikes	When adverse weather subsides unit should self–recover; cycle ODU power if necessary
			Loose wire in control box area	Check for loose wire in ODU
			Ground lead from Compressor attached to winding power connection	Ensure compressor ground and other leads are correctly installed
			Compressor Winding damage	Troubleshoot compressor windings. For the 2 and 3T the resistance should be .681 ohm and for 4 and 5T the resistance should be .203 ohm at 70F +/–20F. See compressor troubleshooting guidelines. If confirmed replace compressor
			Inverter internal damage	Replace Inverter

** Fault code present on software version 5 and earlier. See TIC2014–0008.

280ANV EVENT / FAULT (CONT.)

OPERATION	FLASH CODE (Amber LED)	Heat or Cool Mode	Possible Causes	ACTION
System Malfunction	96	Both	Low supply line voltage (< 180 VAC)	Check supply voltage to ODU; if low contact utility provider
			Stormy weather causing intermittent voltage dropouts	When adverse weather subsides unit should self−recover; cycle ODU power if necessary
			Loose wire in control box area	Loose wire: check for loose wire in ODU
			Inverter internal damage	Replace Inverter
System Malfunction	97	Both	High supply line voltage (> 257 VAC)	Check supply voltage to ODU; if high contact utility provider
			Stormy weather causing intermittent voltage spikes	When adverse weather subsides unit should self−recover; cycle ODU power if necessary
			Inverter internal damage	Replace Inverter
Event	98	Both	High Torque or Flank Loading Event	System will try to self−mitigate, persistent conditions will lead to lockout (refer to Error Code 99)
System Malfunction	99	Both	Outside Normal Operating Range (e.g. improper load calculation, system match issue, outside cooling range, outside heating range etc)	Consult Application Guidelines
			Restriction due to debris leading to Overcharge when charging in Cooling mode	Clean System (refer to application guideline) and replace filter drier
			Restriction in EXV plus Long Line Application leading to Overcharge when charging in Cooling mode	If long line, troubleshoot EXV
			None condensibles leading to high load	Clean System (refer to application guideline) and replace filter drier
		Cool	Service Valve left closed (Liquid or Vapor)	Ensure Service Valves are open
			Overcharged System	Check system charge using Cooling Charging Mode (follow proper charging procedures)
			Outdoor Airflow too low or off	Check Outdoor Coil for clogging (ice or debris) and clean or de−ice if necessary; Troubleshoot Outdoor fan motor and make sure it is working; follow Outdoor Airflow troubleshooting instruction
			Restriction in Filter Drier plus Long Line Application and filter drier on Outdoor Unit	Clean System (refer to application guideline) and replace filter drier
			Restriction in EXV plus Overcharge	troubleshoot EXV
			Restriction in Circuits or Tubing	Check kinks and straighten or replace circuits
		Heat	Electric Heater plus Heat pump application: Electric Heater stuck on	If User Interface is not requesting Electric Heat check for heater relays, if on troubleshoot Electric Heater
			Furnace plus Heat pump application: Furnace stuck on	If not in Defrost and Furnace is running same time as heat pump, troubleshoot Furnace
			Restriction in Filter Drier plus Long Line Application and filter drier on Indoor Unit	Clean System (refer to application guideline) and replace filter drier
			Expansion Orifice Restriction	Troubleshoot TXV (see guide below)
				Troubleshoot EXV (see guide below)
			Service Valve left closed (Vapor Service Valve)	Ensure Vapor Service Valve is open
			Indoor Airflow too low or off	Check Indoor for clogging (ice or debris) and clean or de−ice if necessary; Troubleshoot Indoor fan motor and make sure it is working; follow Indoor Airflow troubleshooting instruction
			Overcharged System	Check charge in cooling (if in Cooling Charge Mode Ambient Range), if low add charge using Charging Mode (follow proper charging procedures); if out side cooling charge mode range, pull out charge, weigh in using heating charge mode
			Reversing Valve Stuck in Cooling	troubleshoot reversing valve
			Restriction due to debris	Clean System (refer to application guideline) and replace filter drier

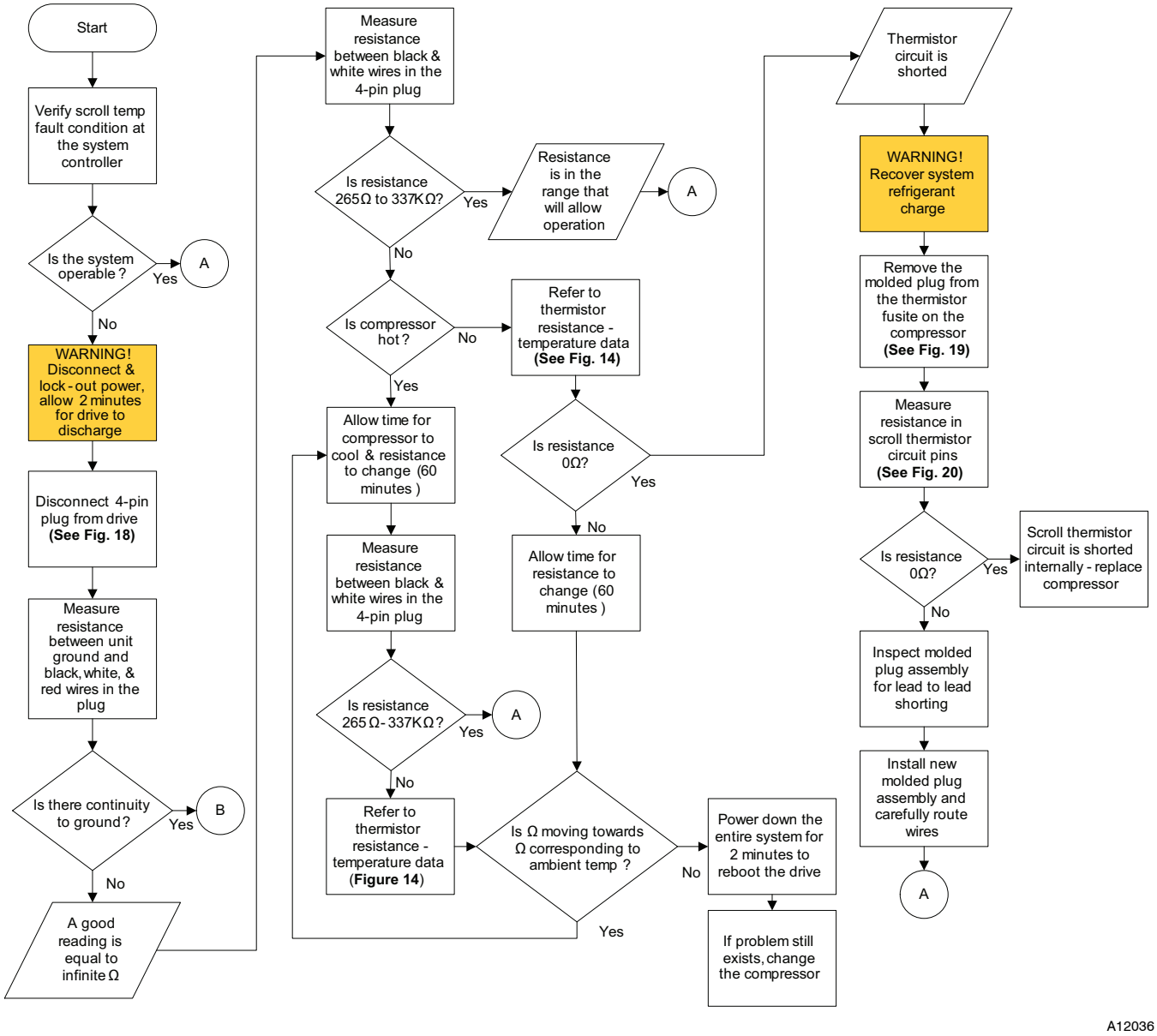

Fig. 12 – Scroll Temp Troubleshooting - Part 1

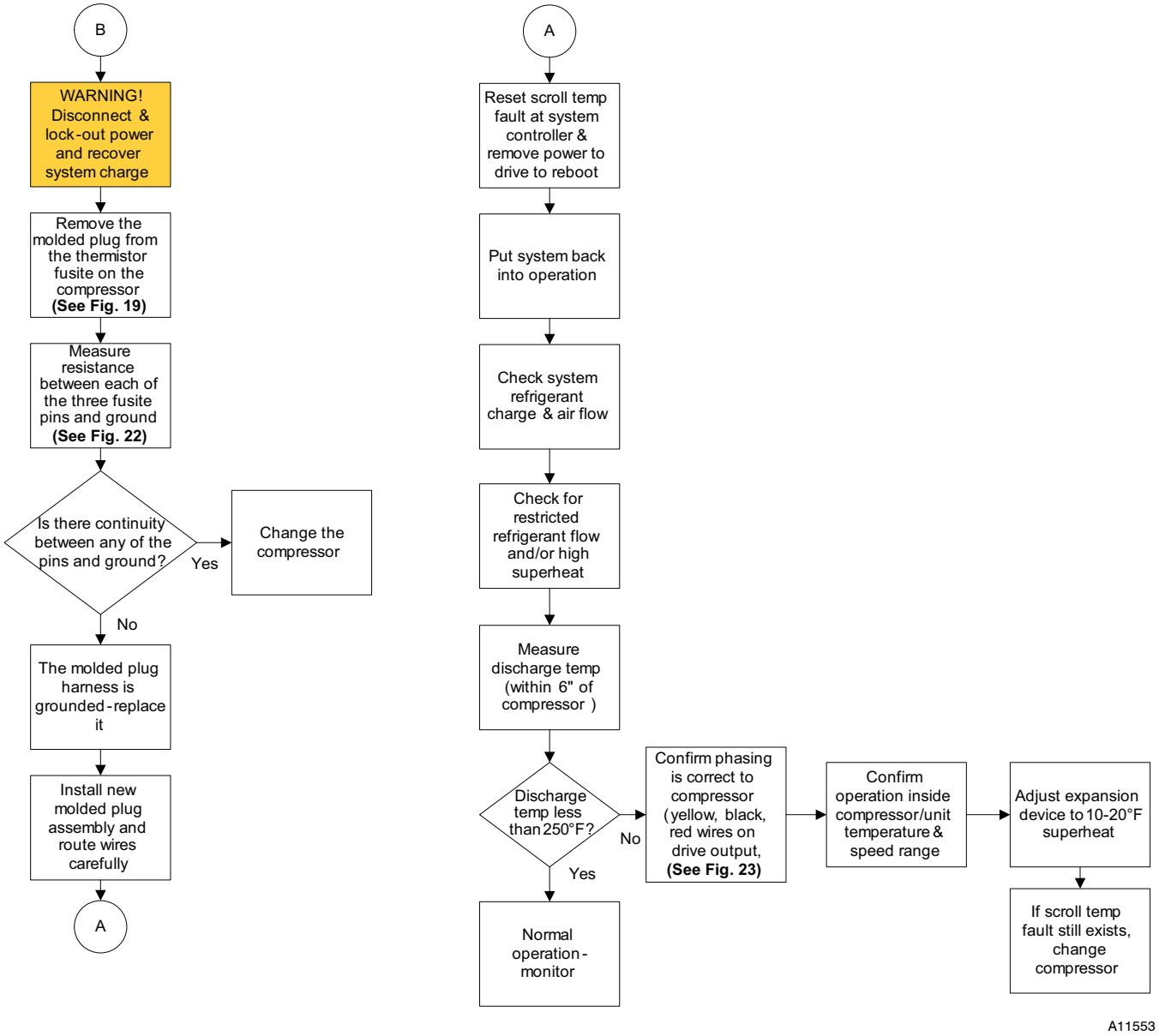

Fig. 13 – Scroll Temp Troubleshooting - Part 2

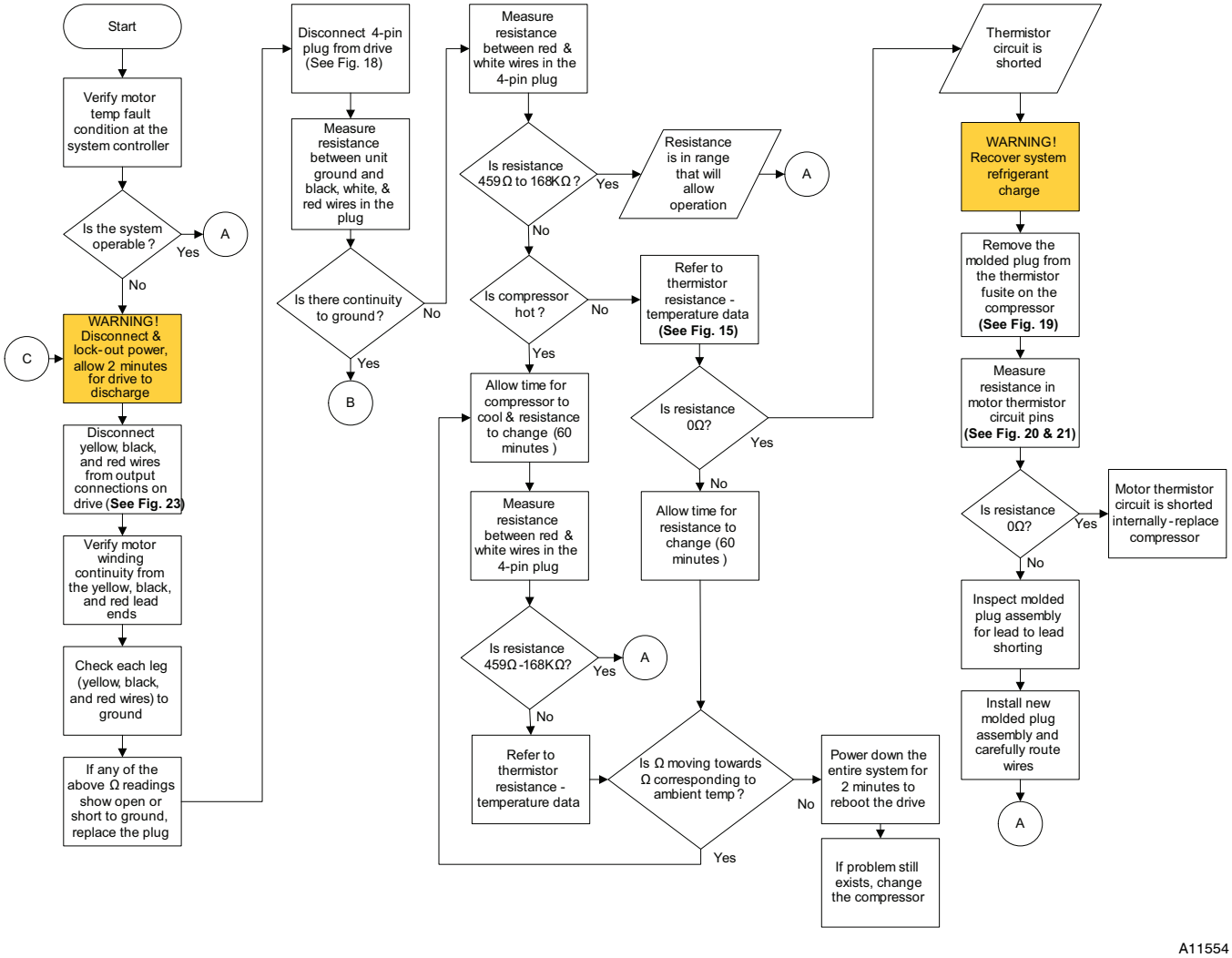

Fig. 14 – Motor Temp Fault Troubleshooting - Part 1

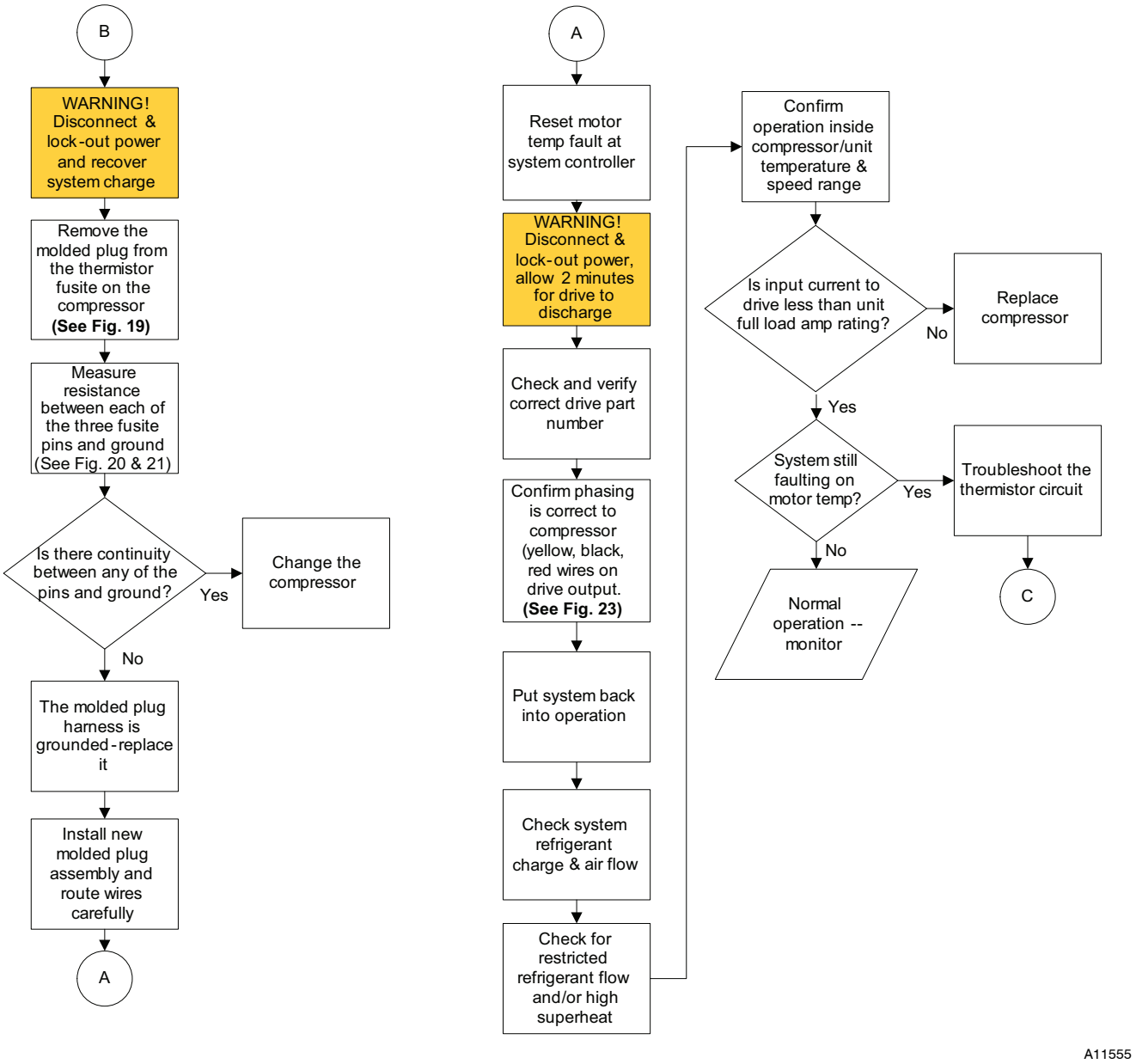

Fig. 15 – Motor Temp Fault Troubleshooting - Part 2

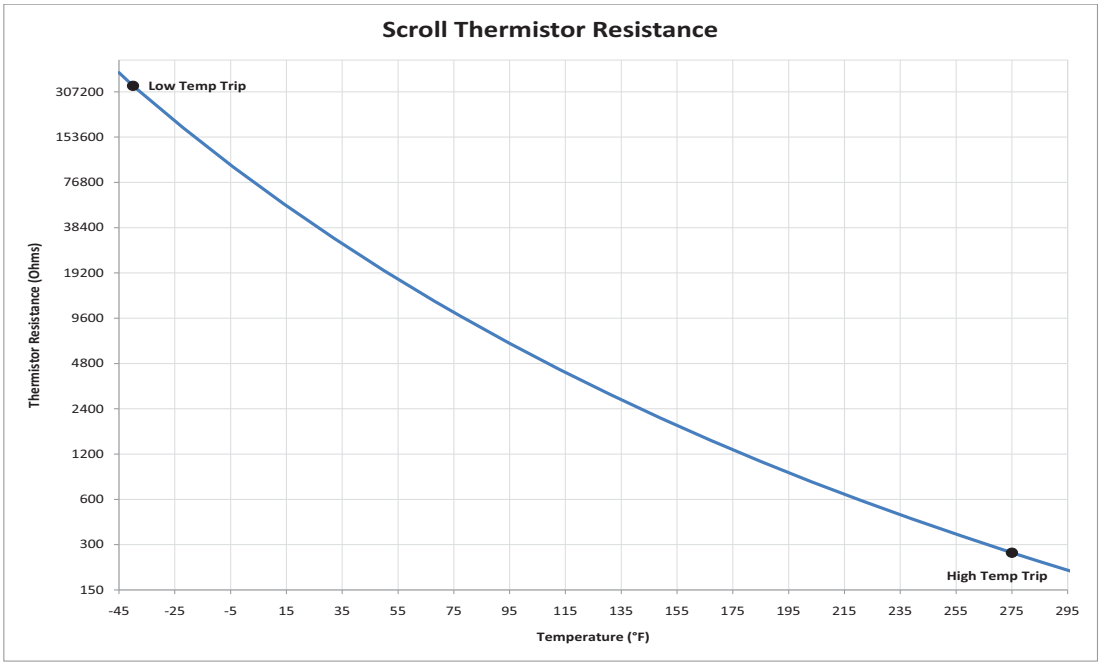

A12038

Fig. 16 – Scroll Thermistor Resistance

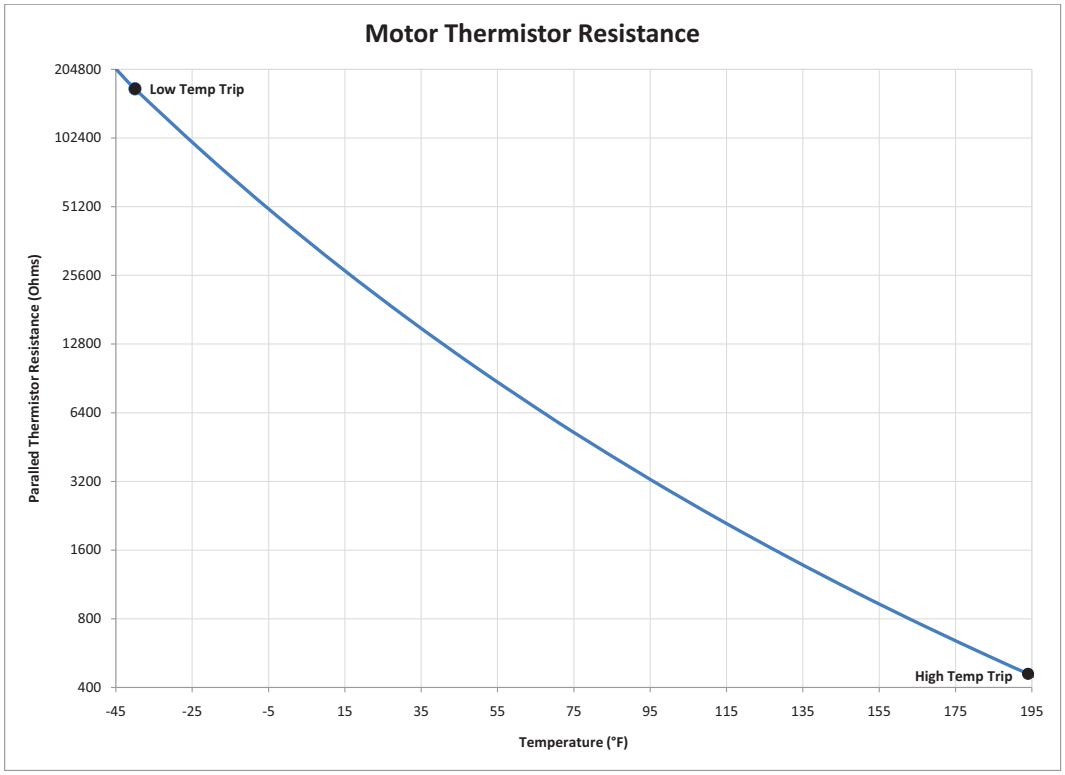

A12039

Fig. 17 – Motor Thermistor Resistance

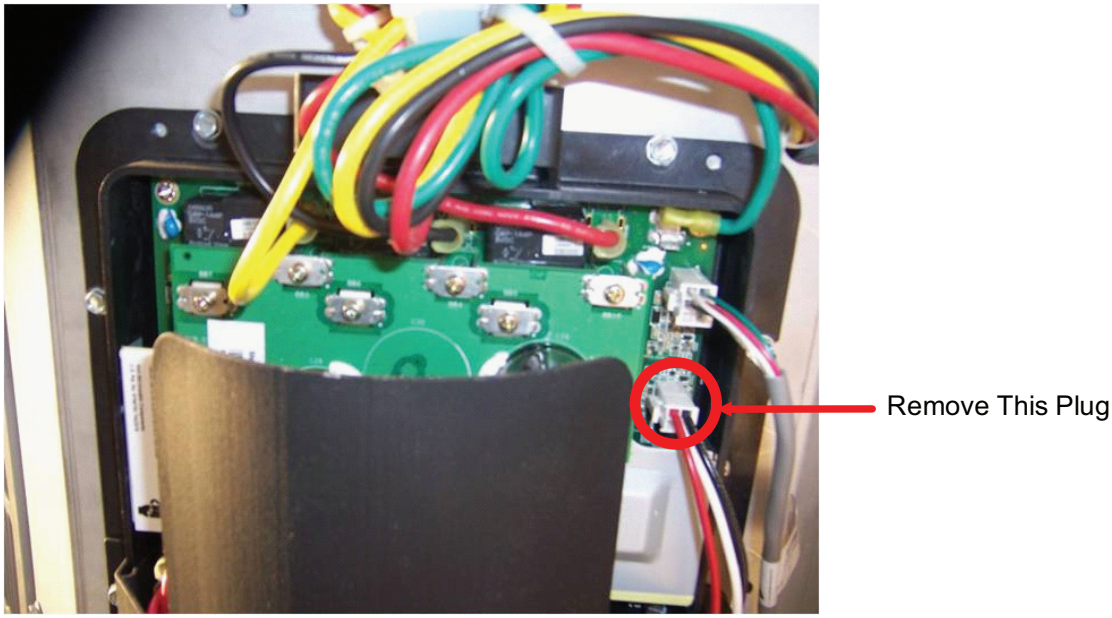

A11556

Fig. 18 – 4-Pin Scroll & Motor NTC Thermistor Plug

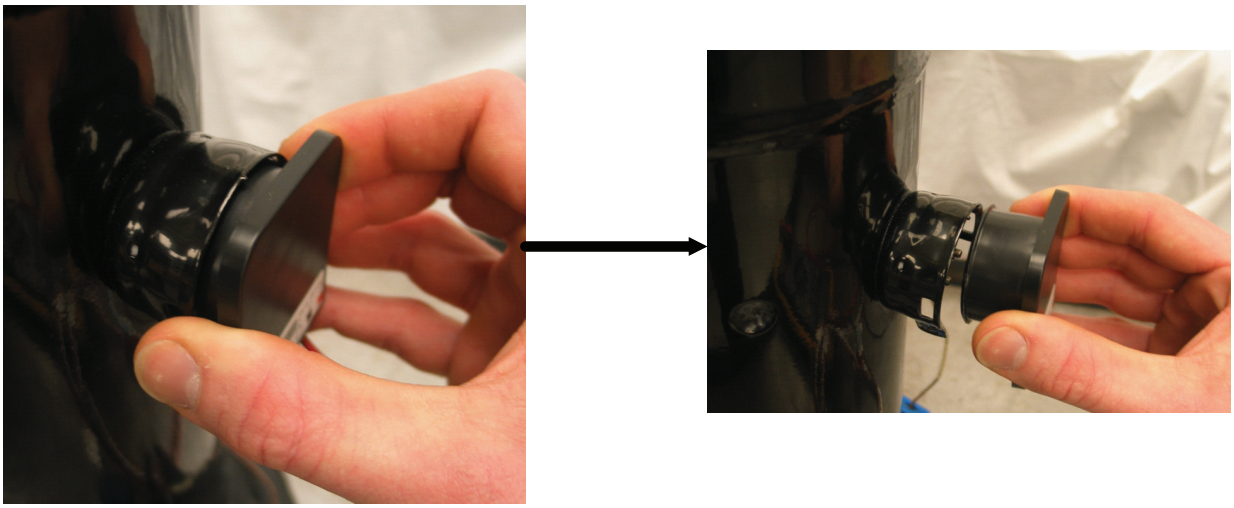

A11557

Fig. 19 – Removing NTC Thermistor Plug

A11558

Fig. 20 – Measuring Scroll NTC Resistance

A11559

Fig. 21 – Measuring Motor NTC Resistance

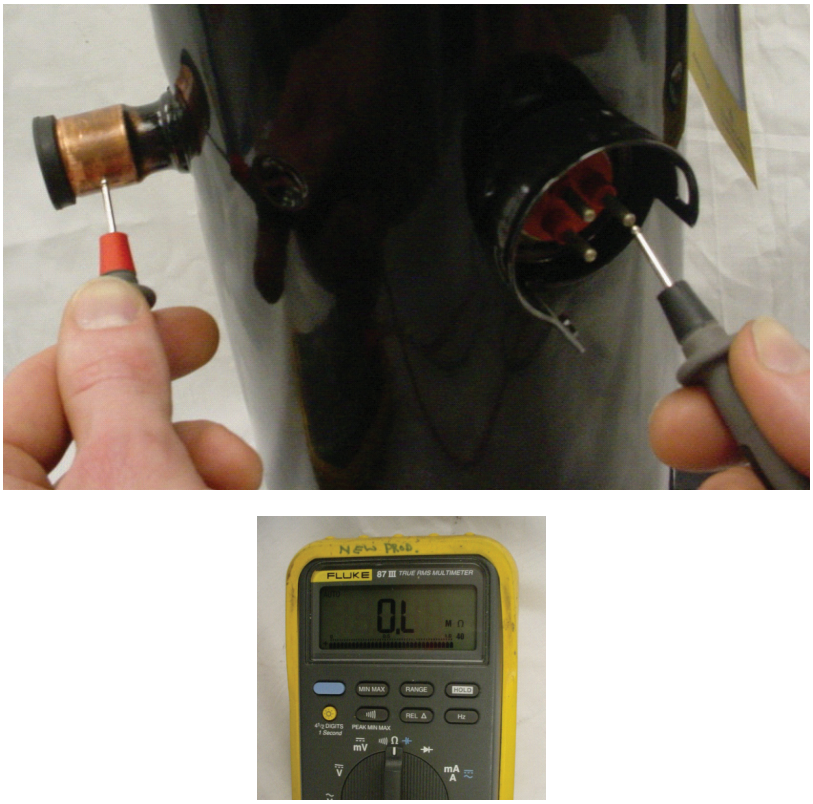

A11560

Fig. 22 – Checking NTC Circuit for Grounded Condition

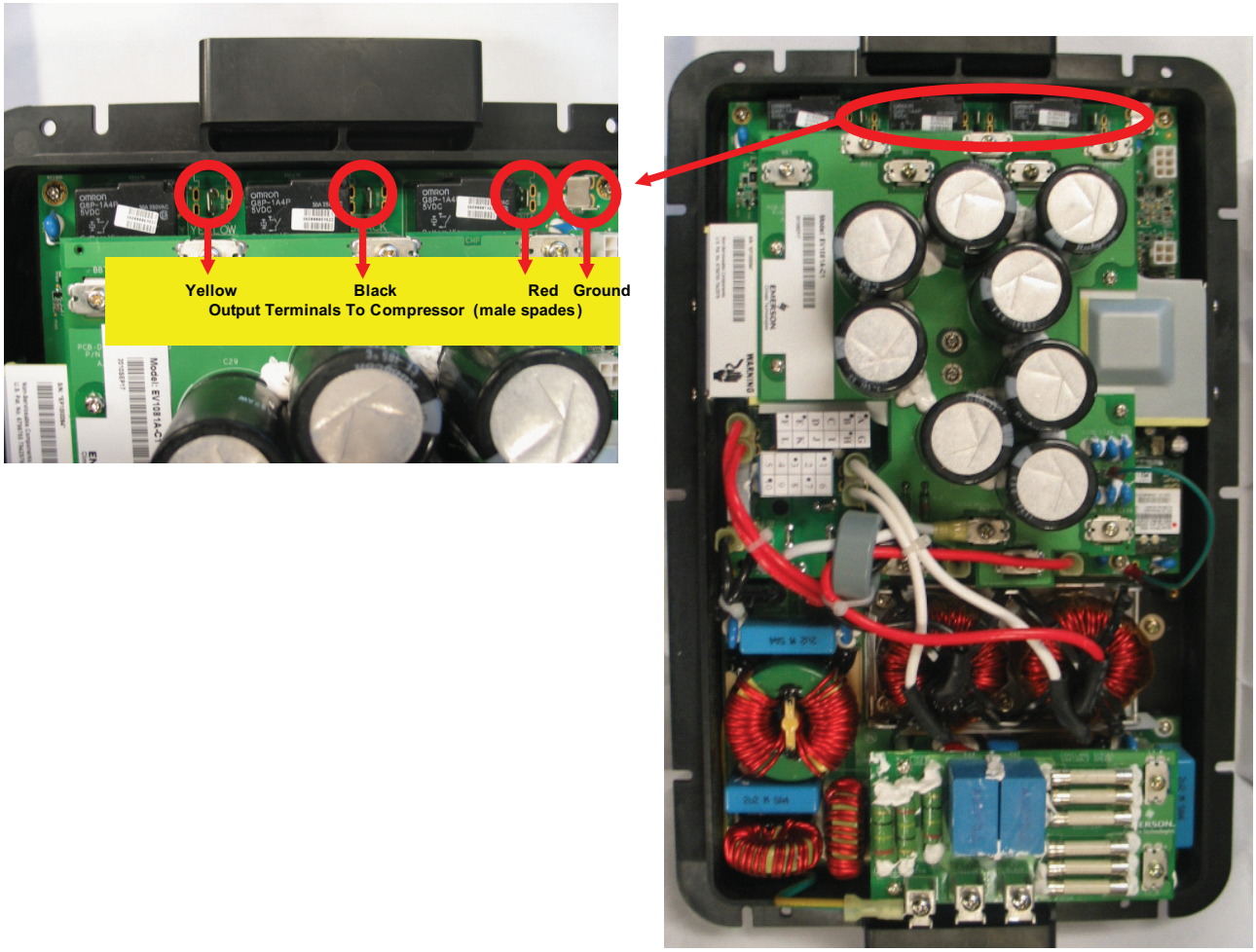

A11561

Fig. 23 – High Voltage Input-Output Connections on Drive

Table 7—Thermistor Resistance Values

Scroll Thermistors				Motor Thermistors			
Ω Value	**Temp °C**	**Temp °F**		**Ω Value**	**Temp °C**	**Temp °F**	
412314	**(43.00)**	**(45.40)**	**HW Trip**	**206108**	**(43.00)**	**(45.40)**	**HW Trip**
336936	**(40.00)**	**(40.00)**	**SW Trip**	**168433**	**(40.00)**	**(40.00)**	**SW Trip**
177072	(30.00)	(22.00)		**88526**	(30.00)	(22.00)	
97088	(20.00)	(4.00)		**48538**	(20.00)	(4.00)	
55325	(10.00)	14.00		**27663**	(10.00)	14.00	
32654	0	32.00		**16327**	0	32.00	
19903	10	50.00		**9951**	10	50.00	
12492	20	68.00		**6246**	20	68.00	
10000	**25**	**77.00**	**Calibration Pt**	**5000**	**25**	**77.00**	**Calibration Pt**
6531	35	95.00		**3266**	35	95.00	
4368	45	113.00		**2184**	45	113.00	
2987	55	131.00		**1494**	55	131.00	
2084	65	149.00		**1042**	65	149.00	
1482	75	167.00		**741**	75	167.00	
1072	85	185.00		**536**	85	185.00	
788	95	203.00		**459**	**90**	**194.00**	**SW Trip**
589	105	221.00		**394**	**95**	**203.00**	**HW Trip**
446	115	239.00					
342	125	257.00					
265	**135**	**275.00**	**SW Trip**				
235	140	284.00					
185	**150**	**302.00**	**HW Trip**				

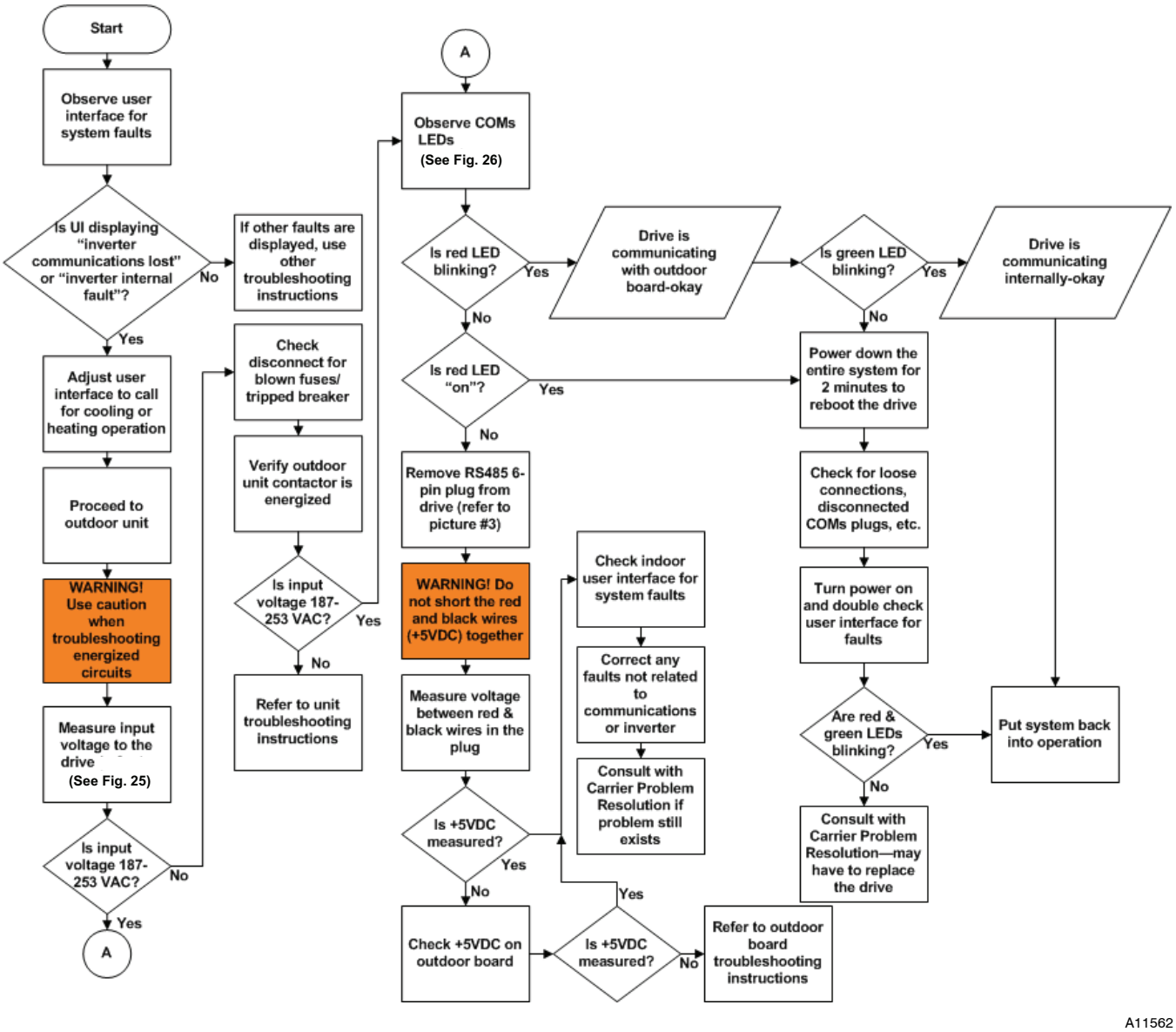

Fig. 24 – Variable Speed Drive Troubleshooting

A11563

Fig. 25 – Measuring Input Voltage (VAC) to Drive L1 & L2

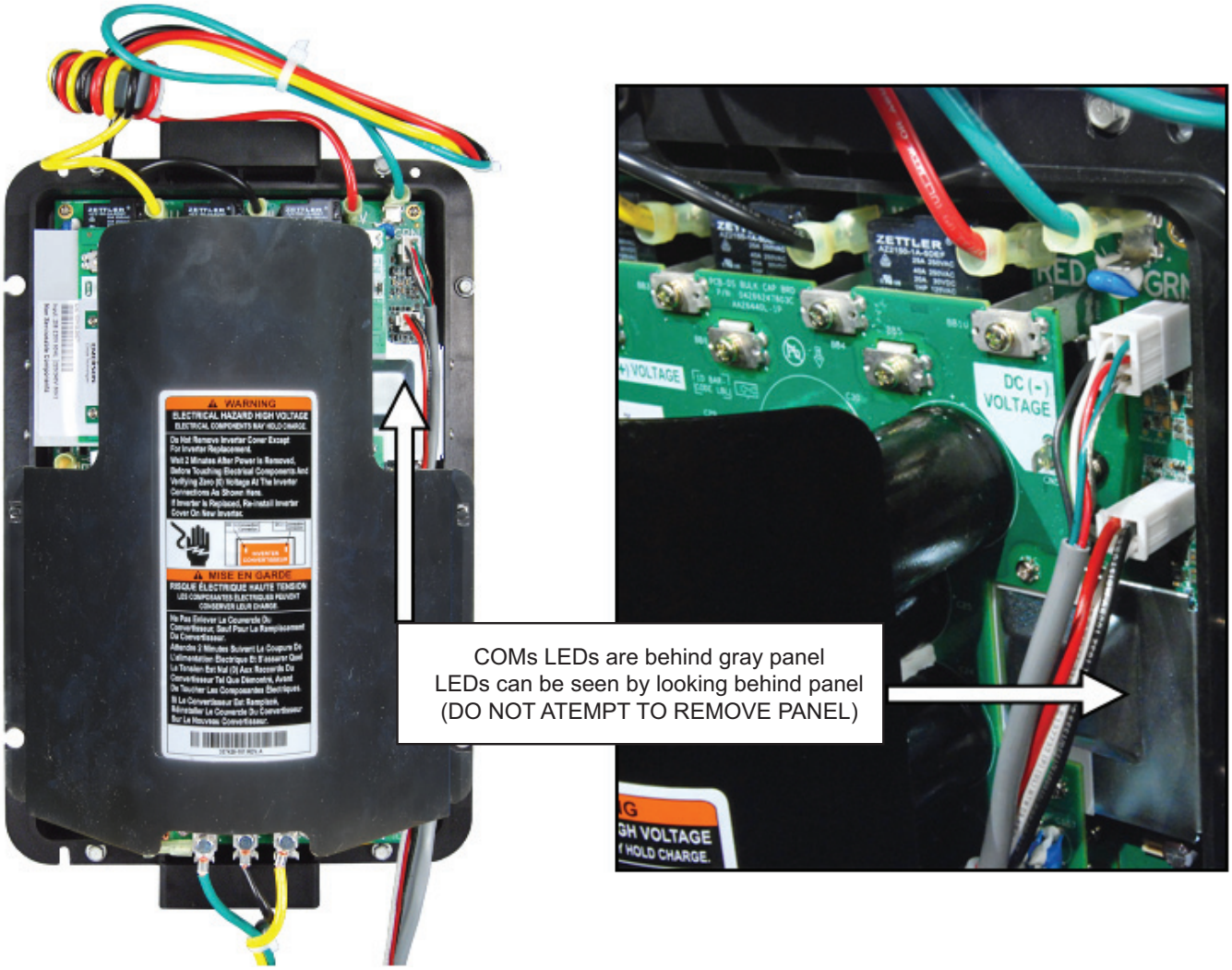

A11564

Fig. 26 – Location of COMs LEDs on Drive

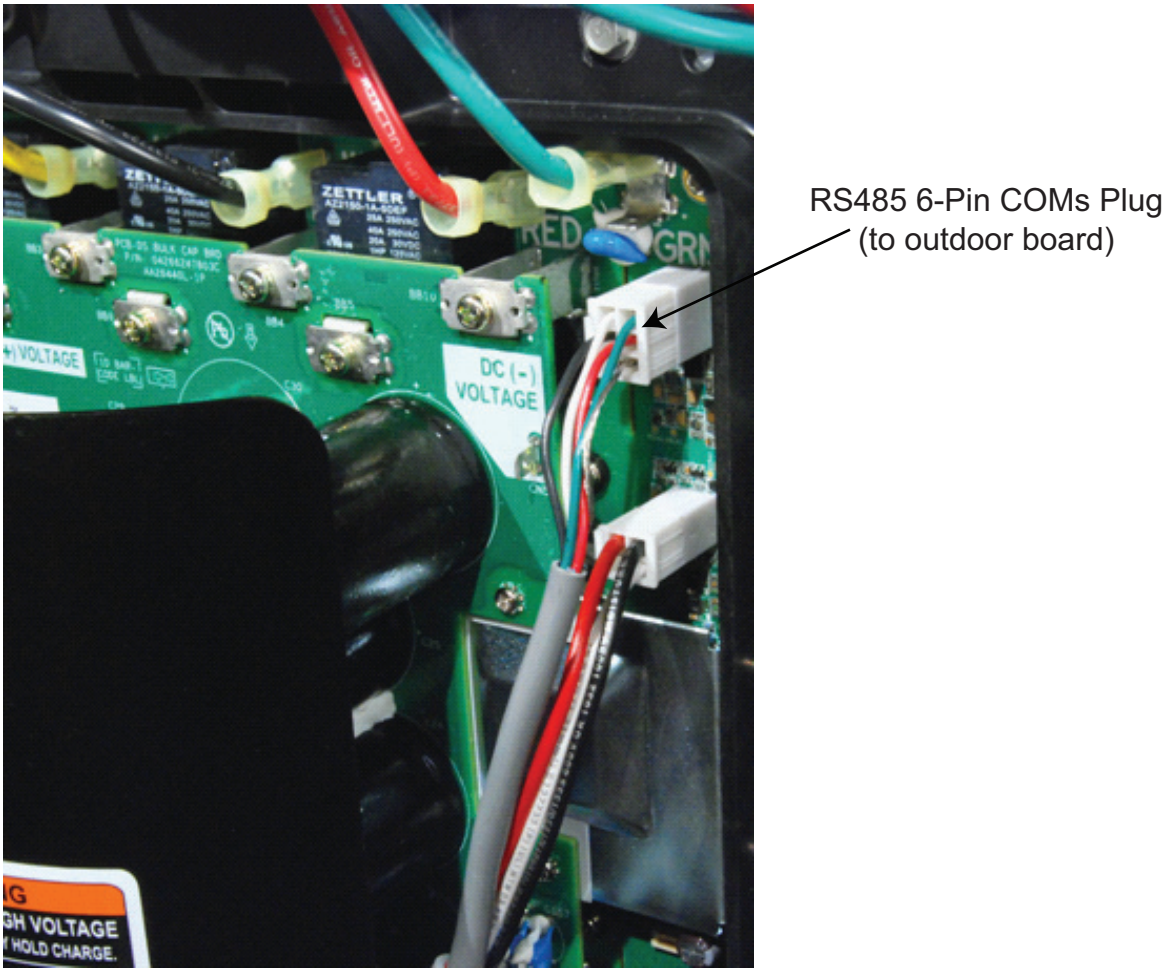

A11565

Fig. 27 – Location of RS485 6-Pin COMs Plug

REFRIGERATION SYSTEM

Refrigerant

⚠ WARNING

UNIT OPERATION AND SAFETY HAZARD

Failure to follow this warning could result in personal injury or equipment damage.

Puron® refrigerant which has higher pressures than R-22 and other refrigerants. No other refrigerant may be used in this system. Gauge set, hoses, and recovery system must be designed to handle Puron®. If you are unsure consult the equipment manufacturer.

In an air conditioning and heat pump system, refrigerant transfers heat from one replace to another. The condenser is the outdoor coil in the cooling mode and the evaporator is the indoor coil.

In a heat pump, the condenser is the indoor coil in the heating mode and the evaporator is the outdoor coil.

In the typical air conditioning mode, compressed hot gas leaves the compressor and enters the condensing coil. As gas passes through the condenser coil, it rejects heat and condenses into liquid. The liquid leaves condensing unit through liquid line and enters metering device at evaporator coil. As it passes through metering device, it becomes a gas-liquid mixture. As it passes through indoor coil, it absorbs heat and the refrigerant moves to the compressor and is again compressed to hot gas, and cycle repeats.

Compressor Oil

⚠ CAUTION

UNIT DAMAGE HAZARD

Failure to follow this caution may result in equipment damage or improper operation.

The compressor in a Puron® system uses a polyol ester (POE) oil. This oil is extremely hygroscopic, meaning it absorbs water readily. POE oils can absorb 15 times as much water as other oils designed for HCFC and CFC refrigerants. Take all necessary precautions to avoid exposure of the oil to the atmosphere.

Servicing Systems on Roofs With Synthetic Materials

POE (polyol ester) compressor lubricants are known to cause long term damage to some synthetic roofing materials. Exposure, even if immediately cleaned up, may cause embrittlement (leading to cracking) to occur in one year or more. When performing any service which may risk exposure of compressor oil to the roof, take appropriate precautions to protect roofing. Procedures which risk oil leakage include but are not limited to compressor replacement, repairing refrigerants leaks, replacing refrigerant components such as filter drier, pressure switch, metering device, coil, accumulator, or reversing valve.

Synthetic Roof Precautionary Procedure

1. Cover extended roof working area with an impermeable polyethylene (plastic) drop cloth or tarp. Cover an approximate 10 x 10 ft area.
2. Cover area in front of the unit service panel with a terry cloth shop towel to absorb lubricant spills and prevent run-offs, and protect drop cloth from tears caused by tools or components.
3. Place terry cloth shop towel inside unit immediately under component(s) to be serviced and prevent lubricant run-offs through the louvered openings in the base pan.
4. Perform required service.
5. Remove and dispose of any oil contaminated material per local codes.

Brazing

This section on brazing is not intended to teach a technician how to braze. There are books and classes which teach and refine brazing techniques. The basic points below are listed only as a reminder.

Definition: The joining and sealing of metals using a nonferrous metal having a melting point over 800°F/426.6°C.

Flux: A cleaning solution applied to tubing or wire before it is brazed. Flux improves the strength of the brazed connection.

When brazing is required in the refrigeration system, certain basics should be remembered. The following are a few of the basic rules.

1. Clean joints make the best joints. To clean:
   - Remove all oxidation from surfaces to a shiny finish before brazing.
   - Remove all flux residue with brush and water while material is still hot.
2. Silver brazing alloy is used on copper-to-brass, copper-to-steel, or copper-to-copper. Flux is required when using silver brazing alloy. Do not use low temperature solder.
3. Fluxes should be used carefully. Avoid excessive application and do not allow fluxes to enter into the system.
4. Brazing temperature of copper is proper when it is heated to a minimum temperature of 800°F and it is a dull red color in appearance.

Service Valves and Pumpdown

⚠ WARNING

PERSONAL INJURY AND UNIT DAMAGE HAZARD

Failure to follow this warning could result in personal injury or equipment damage.

Never attempt to make repairs to existing service valves. Unit operates under high pressure. Damaged seats and o-rings should not be replaced. Replacement of entire service valve is required. Service valve must be replaced by properly trained service technician.

Service valves provide a means for holding original factory charge in outdoor unit prior to hookup to indoor coil. They also contain gauge ports for measuring system pressures and provide shutoff convenience for certain types of repairs. (See Fig. 28)

The service valve is a front-seating valve, which has a service port that contains a Schrader fitting. The service port is always pressurized after the valve is moved off the front-seat position.

The service valves in the outdoor unit come from the factory front-seated. This means that the refrigerant charge is isolated from the line-set connection ports. The interconnecting tubing (line set) can be brazed to the service valves using industry accepted methods and materials. Consult local codes.

Before brazing the line set to the valve, the belled ends of the sweat connections on the service valves must be cleaned so that no brass plating remains on either the inside or outside of the bell joint. To prevent damage to the valve and/or cap "O" ring, use a wet cloth or other acceptable heat-sinking material on the valve before brazing. To prevent damage to the unit, use a metal barrier between brazing area and unit.

After the brazing operation and the refrigerant tubing and evaporator coil have been evacuated, the valve stem can be turned counterclockwise until back-seats, which releases refrigerant into tubing and evaporator coil. The system can now be operated.

The service valve-stem cap is tightened to 20 ± 2 ft/lb torque and the service-port caps to 9 ± 2 ft/lb torque. The seating surface of the valve stem has a knife-set edge against which the caps are tightened to attain a metal-to-metal seal.

The service valve cannot be field repaired; therefore, only a complete valve or valve stem and service-port caps are available for replacement.

If the service valve is to be replaced, a metal barrier must be inserted between the valve and the unit to prevent damaging the unit exterior from the heat of the brazing operations.

⚠ CAUTION

PERSONAL INJURY HAZARD

Failure to follow this caution may result in personal injury.

Wear safety glasses, protective clothing, and gloves when handling refrigerant.

Pumpdown & Evacuation

If this system requires either a Pump Down or Evacuation for any reason, the procedures below must be followed:

Pump Down

Because this system has an inverter controlled, compressor, suction pressure transducer and EXV, conventional procedure cannot be used to "pump down" and isolate the refrigerant into the outdoor unit. The UI (User Interface) has provisions to assist in performing this function.

1. Connect gages to 280ANV liquid and vapor or suction capillary service ports to monitor operating pressures during and at completion of the procedure.
2. In the advanced menu of the UI, go to Checkout > Heat Pump> Pumpdown
3. Select mode to pump down in (COOL or HEAT), COOL mode allows refrigerant to be isolated in outdoor unit. HEAT mode allows the refrigerant to be isolated in indoor coil and lineset. Set desired time period. Default time period for the procedure is 120 minutes.
4. Select Start on UI to begin the pumpdown process. Unit will begin running in selected mode after a brief delay.
5. Close the liquid service valve.
6. The unit will run in selected mode with the low pressure protection set to indicate pumpdown is complete when the suction pressure drops below 0 psig. Compressor protections are still active to prevent damage to the compressor or inverter (high pressure, high current, high torque, scroll temperature, etc.) .
7. Once system indicates pumpdown complete or failure to complete shutdown, close vapor service valve.
8. If pumpdown does not complete due to compressor safety shutdown, a recovery system will be required to remove final quantity of refrigerant from indoor coil and line set.
9. Remove power from indoor and heat pump unit prior to servicing unit.

NOTE: A small quantity of charge remains in the OD unit that must be manually recovered if isolating refrigerant to indoor coil and lineset via HEAT mode PUMP DOWN.

Evacuation and Recovery of Refrigerant from within 280ANV

⚠ CAUTION

ENVIRONMENTAL HAZARD

Failure to follow this caution may result in environmental damage.

Federal regulations require that you do not vent refrigerant to the atmosphere. Recover during system repair or final unit disposal.

Because this system has an EXV for the heating expansion device, additional steps must be taken to open the EXV if the heat pump unit must be evacuated for service reasons. If the EXV is not open when pulling a vacuum or recovering refrigerant from the heat pump unit, extended evacuation time may be required and/or inadequate vacuum obtained. The UI (User Interface) has provisions to open the EXV for refrigerant recovery and/or evacuation.

1. Connect gages to 280ANV liquid and vapor or suction capillary service ports to monitor operating pressures during and at completion of the procedure. Attach recovery system or vacuum pump to gage set as needed for the service procedure. The service valves must be open to evacuate the unit through the line set service ports. The suction capillary service port is a direct connection to the suction port of the compressor.
2. In the advanced menu of the UI, go to Checkout > Heat Pump> > Evacuation.
3. Set desired time period. Default time period for the procedure is 120 minutes.
4. Select START on UI to open the valve.
5. Begin evacuation or refrigerant recovery as required for the procedure after UI indicates the EXV is open. Power may be removed from heat pump after the UI indicates "READY TO EVACUATE."

6. Remove power from indoor and heat pump unit prior to servicing unit. The EXV will retain the open position.

NOTE: See service training materials for troubleshooting the EXV using EXV CHECK mode.

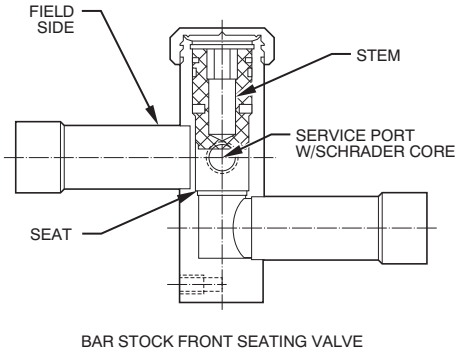

A91447

Fig. 28 – Suction Service Valve (Front Seating)

NOTE: All outdoor unit coils will hold only factory-supplied amount of refrigerant. Excess refrigerant, such as in long-line applications, may cause unit to relieve pressure through internal pressure-relief valve (indicated by sudden rise of suction pressure) before suction pressure reaches 5 psig (35kPa). If this occurs, shut unit off immediately, front seat suction valve, and recover remaining pressure.

Reversing Valve

In heat pumps, changeover between heating and cooling modes is accomplished with a valve that reverses flow of refrigerant in system. This reversing valve device is easy to troubleshoot and replace. The reversing valve solenoid can be checked with power off with an ohmmeter. Check for continuity and shorting to ground. With control circuit (24v) power on, check for correct voltage at solenoid coil. Check for overheated solenoid.

With unit operating, other items can be checked, such as frost or condensate water on refrigerant lines.

The sound made by a reversing valve as it begins or ends defrost is a "whooshing" sound, as the valve reverses and pressures in system equalize. An experienced service technician detects this sound and uses it as a valuable troubleshooting tool.

Using a remote measuring device, check inlet and outlet line temperatures. **DO NOT** touch lines. If reversing valve is operating normally, inlet and outlet temperatures on appropriate lines should be close to each other. Any difference would be due to heat loss or gain across valve body. Temperatures are best checked with a remote reading electronic-type thermometer with multiple probes. Route thermocouple leads to inside of coil area through service valve mounting plate area underneath coil. Fig. 29 and Fig. 30 show test points (TP) on reversing valve for recording temperatures. Insulate points for more accurate reading.

If valve is defective:

1. Shut off all power to unit and remove charge from system.
2. Remove solenoid coil from valve body. Remove valve by cutting it from system with tubing cutter. Repair person should cut in such a way that stubs can be easily re-brazed back into system. Do not use hacksaw. This introduces chips into system that cause failure. After defective valve is removed, wrap it in wet rag and carefully unbraze stubs. Save stubs for future use. Because defective valve is not overheated, it can be analyzed for cause of failure when it is returned.
3. Braze new valve onto used stubs. Keep stubs oriented correctly. Scratch corresponding matching marks on old valve and stubs and on new valve body to aid in lining up new valve properly. When brazing stubs into valve, protect valve body with wet rag to prevent overheating.
4. Use slip couplings to install new valve with stubs back into system. Even if stubs are long, wrap valve with a wet rag to prevent overheating.
5. After valve is brazed in, check for leaks. Evacuate and charge system. Operate system in both modes several times to be sure valve functions properly.

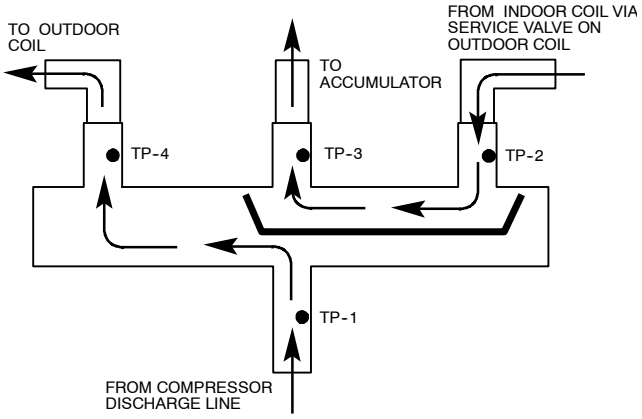

A88342

Fig. 29 – Reversing Valve (Cooling Mode or Defrost Mode, Solenoid Energized)

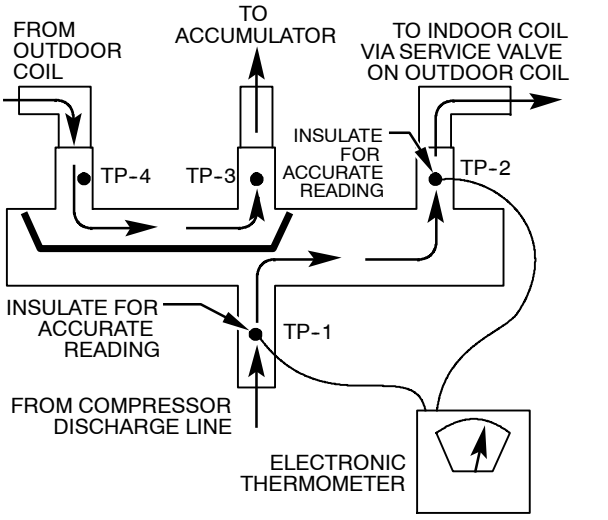

A88341

Fig. 30 – Reversing Valve (Heating Mode, Solenoid De-Energized)

⚠ WARNING

ELECTRICAL SHOCK HAZARD

Failure to follow this warning could result in personal injury or death.

Before installing, modifying, or servicing system, main electrical disconnect switch must be in the OFF position. There may be more than 1 disconnect switch. Lock out and tag switch with a suitable warning label.

Liquid Line Filter Drier

Filter driers are specifically designed for R-22 or Puron® refrigerant. Only operate with the appropriate drier using factory authorized components.

It is recommended that the liquid line drier be installed at the indoor unit. Placing the drier near the TXV allows additional protection to the TXV as the liquid line drier also acts as a strainer.

⚠ CAUTION

UNIT DAMAGE HAZARD

Failure to follow this caution may result in equipment damage or improper operation.

To avoid performance loss and compressor failure, installation of filter drier in liquid line is required.

⚠ CAUTION

UNIT DAMAGE HAZARD

Failure to follow this caution may result in equipment damage or improper operation.

To avoid filter drier damage while brazing, filter drier must be wrapped in a heat-sinking material such as a wet cloth.

Install Liquid-line Filter Drier Indoor - HP

Refer to Fig. 31 and install filter drier as follows:

1. Braze 5 in. liquid tube to the indoor coil.
2. Wrap filter drier with damp cloth.
3. Braze filter drier to 5 in. long liquid tube from step 1.
4. Connect and braze liquid refrigerant tube to the filter drier.

Suction Line Filter Drier

The suction line drier is specifically designed to operate with Puron®, use only factory authorized components. Suction line filter drier is used in cases where acid might occur, such as burnout. Heat pump units must have the drier installed between the compressor and accumulator only. Remove after 10 hours of operation. Never leave suction line filter drier in a system longer than 72 hours (actual time).

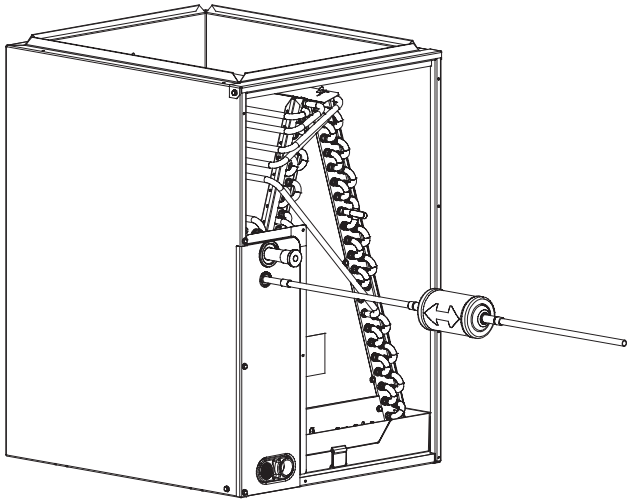

Fig. 31 – Liquid Line Filter Drier - HP

Thermostatic Expansion Valve (TXV)

All fan coils and furnace coils will have a factory installed thermostatic expansion valve (TXV). The TXV will be a bi-flow, hard-shutoff with an external equalizer and a balance port pin. A hard shut-off TXV does not have a bleed port. Therefore, minimal equalization takes place after shutdown. TXVs are specifically designed to operate with Puron® or R-22 refrigerant, use only factory authorized TXV's. **Do not interchange Puron and R-22 TXVs.**

TXV Operation

The TXV is a metering device that is used in air conditioning and heat pump systems to adjust to changing load conditions by maintaining a preset superheat temperature at the outlet of the evaporator coil. The volume of refrigerant metered through the valve seat is dependent upon the following:

1. Superheat temperature is sensed by cap tube sensing bulb on suction tube at outlet of evaporator coil. This temperature is converted into pressure by refrigerant in the bulb pushing downward on the diaphragm which opens the valve via the push rods.
2. The suction pressure at the outlet of the evaporator coil is transferred via the external equalizer tube to the underside of the diaphragm. This is needed to account for the indoor coil pressure drop. Residential coils typically have a high pressure drop, which requires this valve feature.
3. The pin is spring loaded, which exerts pressure on the underside of the diaphragm. Therefore, the bulb pressure works against the spring pressure and evaporator suction pressure to open the valve.
   If the load increases, the temperature increases at the bulb, which increases the pressure on the top side of the diaphragm. This opens the valve and increases the flow of refrigerant. The increased refrigerant flow causes the leaving evaporator temperature to decrease. This lowers the pressure on the diaphragm and closes the pin. The refrigerant flow is effectively stabilized to the load demand with negligible change in superheat.

Accumulator

The accumulator is specifically designed to operate with Puron® or R22 respectfully; use only factory-authorized components. Under some light load conditions on indoor coils, liquid refrigerant is present in suction gas returning to compressor. The accumulator stores liquid and allows it to boil off into a vapor so it can be safely returned to compressor. Since a compressor is designed to pump refrigerant in its gaseous state, introduction of liquid into it could cause severe damage or total failure of compressor.

The accumulator is a passive device which seldom needs replacing. Occasionally its internal oil return orifice or bleed hole may become plugged. Some oil is contained in refrigerant returning to compressor. It cannot boil off in accumulator with liquid refrigerant. The bleed hole allows a small amount of oil and refrigerant to enter the return line where velocity of refrigerant returns it to compressor. If bleed hole plugs, oil is trapped in accumulator, and compressor will eventually fail from lack of lubrication. If bleed hole is plugged, accumulator must be changed. The accumulator has a fusible element located in the bottom end bell. (See Fig. 32.) This fusible element will melt at 430°F//221°C and vent the refrigerant if this temperature is reached either internal or external to the system. If fuse melts, the accumulator must be replaced.

To change accumulator:

1. Shut off all power to unit.
2. Recover all refrigerant from system.
3. Break vacuum with dry nitrogen. Do not exceed 5 psig.

NOTE: Coil may be removed for access to accumulator. Refer to appropriate sections of Service Manual for instructions.

⚠ CAUTION

PERSONAL INJURY HAZARD

Failure to follow this caution may result in personal injury.

Wear safety glasses, protective clothing, and gloves when handling refrigerant.

4. Remove accumulator from system with tubing cutter.
5. Tape ends of open tubing.
6. Scratch matching marks on tubing studs and old accumulator. Scratch matching marks on new accumulator. Unbraze stubs from old accumulator and braze into new accumulator.
7. Thoroughly rinse any flux residue from joints and paint with corrosion-resistant coating such as zinc-rich paint.
8. Install factory authorized accumulator into system with copper slip couplings.
9. Evacuate and charge system.

Pour and measure oil quantity (if any) from old accumulator. If more than 20 percent of oil charge is trapped in accumulator, add new POE oil to compressor to make up for this loss.

⚠ WARNING

ELECTRICAL SHOCK HAZARD

Failure to follow this warning could result in personal injury or death.

Before installing, modifying, or servicing system, main electrical disconnect switch must be in the OFF position. There may be more than 1 disconnect switch. Lock out and tag switch with a suitable warning label.

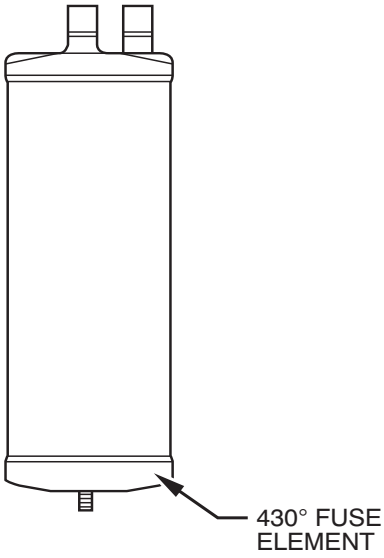

A88410

Fig. 32 – Accumulator

REFRIGERATION SYSTEM REPAIR

Leak Detection

New installations should be checked for leaks prior to complete charging. If a system has lost all or most of its charge, system must be pressurized again to approximately 150 psi minimum and 375 psi maximum. This can be done by adding refrigerant using normal charging procedures or by pressurizing system with nitrogen (less expensive than refrigerant). Nitrogen also leaks faster than refrigerants. Nitrogen cannot, however, be detected by an electronic leak detector. (See Fig. 33.)

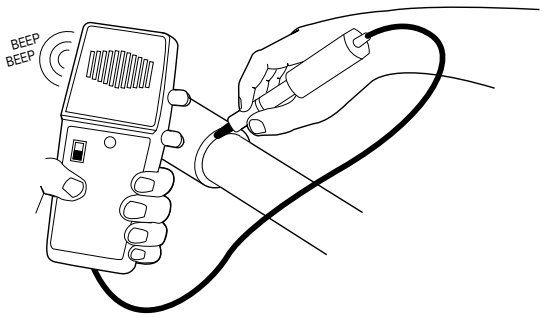

A95422

Fig. 33 – Electronic Leak Detection

⚠ WARNING

PERSONAL INJURY AND UNIT DAMAGE HAZARD

Failure to follow this warning could result in personal injury or death.

Due to the high pressure of nitrogen, it should never be used without a pressure regulator on the tank.

Assuming that a system is pressurized with either all refrigerant or a mixture of nitrogen and refrigerant, leaks in the system can be found with an electronic leak detector that is capable of detecting specific refrigerants.

If system has been operating for some time, first check for a leak visually. Since refrigerant carries a small quantity of oil, traces of oil at any joint or connection is an indication that refrigerant is leaking at that point.

A simple and inexpensive method of testing for leaks is to use soap bubbles. (See Fig. 34.) Any solution of water and soap may be used. Soap solution is applied to all joints and connections in system. A small pinhole leak is located by tracing bubbles in soap solution around leak. If the leak is very small, several minutes may pass before a bubble will form. Popular commercial leak detection solutions give better, longer-lasting bubbles and more accurate results than plain soapy water. The bubble solution must be removed from the tubing and fittings after checking for leaks as some solutions may corrode the metal.

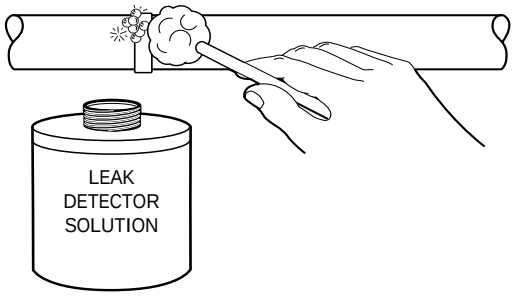

A95423

Fig. 34 – Bubble Leak Detection

You may use an electronic leak detector designed for specific refrigerant to check for leaks. (See Fig. 33.) This unquestionably is the most efficient and easiest method for checking leaks. There are various types of electronic leak detectors. Check with manufacturer of equipment for suitability. Generally speaking, they are portable, lightweight, and consist of a box with several switches and a probe or sniffer. Detector is turned on and probe is passed around all fittings and connections in system. Leak is detected by either the movement of a pointer on detector dial, a buzzing sound, or a light.

In all instances when a leak is found, system charge must be recovered and leak repaired before final charging and operation. After leak testing or leak is repaired, replace liquid line filter drier, evacuate system, and recharge with correct refrigerant quantity.

⚠ WARNING

ELECTRICAL SHOCK HAZARD

Failure to follow this warning could result in personal injury or death.

Before installing, modifying, or servicing system, main electrical disconnect switch must be in the OFF position. There may be more than 1 disconnect switch. Lock out and tag switch with a suitable warning label.

Coil Removal

Coils are easy to remove if required for compressor removal, or to replace coil.

1. Shut off all power to unit.
2. Recover refrigerant from system through service valves.
3. Break vacuum with nitrogen.
4. Remove top cover.
5. Remove screws in base pan to coil grille.
6. Remove coil grille from unit.
7. Remove screws on corner post holding coil tube sheet.

⚠ WARNING

FIRE HAZARD

Failure to follow this warning could result in personal injury or equipment damage.

Cut tubing to reduce possibility of personal injury and fire.

8. Use midget tubing cutter to cut liquid and vapor lines at both sides of coil. Cut in convenient location for easy reassembly with copper slip couplings.
9. Lift coil vertically from basepan and carefully place aside.
10. Reverse procedure to reinstall coil.
11. Replace filter drier, evacuate system, recharge, and check for normal systems operation.