**37MHRAC**

**Cooling Only**
**Sizes 9K to 24K**

# Product Data

**Fig. 1 — Sizes 9K - 24K**

**NOTE:** Images are for illustration purposes **only**. Actual models may differ slightly.

## TABLE OF CONTENTS


PAGE

I
INDUSTRY LEADING FEATURES / BENEFITS . . . . . 1
MODEL NUMBER NOMENCLATURE . . . . . 3
STANDARD FEATURES AND ACCESSORIES . . . . . 4
DIMENSIONS - COOLING ONLY . . . . . 5
CLEARANCES . . . . . 8
SPECIFICATIONS - COOLING ONLY . . . . . 9
COMPATIBILITY . . . . . 10
SYSTEM PERFORMANCE - COOLING ONLY . . . . . 11
COOLING PERFORMANCE DATA - COOLING ONLY . . . . . 12
APPLICATION DATA . . . . . 47
WIRING . . . . . 47
WIRING DIAGRAMS . . . . . 50
GUIDE SPECIFICATIONS . . . . . 53


## INDUSTRY LEADING FEATURES / BENEFITS

### A PERFECT BALANCE BETWEEN BUDGET LIMITS, ENERGY SAVINGS AND COMFORT.

The **37MHRAC** series ductless systems are a matched combination of an outdoor condensing unit and an indoor fan coil unit connected only by refrigerant tubing and wires.

The ductless system permits creative solutions to design problems such as:

- Add-ons to current space (an office or family room addition)
- Special space requirements
- When changes in the load cannot be handled by the existing system
- When adding air conditioning to spaces that are heated by hydronic or electric heat and have no ductwork
- Historical renovations or any application where preserving the look of the original structure is essential.

The ideal compliment to your ducted system when it is impractical or prohibitively expensive to use ductwork.

The compact indoor fan coil units take up very little space in the room and do not obstruct windows. The fan coils are attractively styled to blend with most room decors. Advanced system components incorporate innovative technology to provide reliable cooling performance at low sound levels.

## Inverter Technology

The inverter driven compressor is designed to run at various input power frequencies (Hz) which controls the compressor's motor speed.

**Even Temperature** – The control package, including the inverter, monitors the outdoor and indoor temperatures as they relate to the selected indoor set point and adjusts the compressor speed to match the load and keep the system operating continuously rather than cycling and creating temperature swings. This translates to higher comfort levels for the occupants.

**Rapid Pull Down/Warm-Up** – Comfort is increased by the inverter system's ability to ramp up the compressor speed enabling the system to reach the user selected room temperature set point quicker.

**Humidity Control** – Running the system for longer periods and continuously varying the compressor speed enhances the humidity control.

## Individual Room Comfort

Maximum comfort is provided because each space can be controlled individually based on the usage pattern.

## Low Sound Levels

When noise is a concern, ductless systems are the answer. The indoor units are whisper quiet. There are no compressors indoors, either in the conditioned space or directly over it, and there is none of the noise usually generated by air being forced through the ductwork.

When sound ordinances and proximity to neighbors demand quiet operation, the **37MHRAC** unit is the right choice. With the inverter technology, these units run at lower speeds most of the time resulting in reduced sound levels.

## Inverter Technology – Enhanced Economical Operation

Ductless systems are inherently economical to operate. Individual rooms are heated or cooled only when required, and since the air is delivered directly to the space, there is no need to use additional energy to move the air in the ductwork. This economical operation is enhanced further when the inverter system output matches the load resulting in a more efficient system.

## Easy-To-Use Controls

The systems have microprocessor-based controls to provide the ultimate in comfort and efficiency. The user friendly wired and wireless remote controls provide the interface between the user and the unit.

## Secure Operation

If security is an issue, outdoor and indoor units are connected only by refrigerant piping and wiring to prevent intruders from crawling through ductwork or wall openings. In addition, since the **37MHRAC** can be installed close to an outside wall, coils are protected from vandals and severe weather.

## Fast Installation

This compact ductless system is simple to install. Only wires and piping need to run between the indoor and outdoor units. These units are fast and easy to install ensuring minimal disruption to customers in homes or the workplace. This makes the **37MHRAC** systems the equipment of choice for retrofit applications.

## Simple Servicing and Maintenance

Removing the top panel of the outdoor unit provides immediate access to the control compartment, providing the service technician access to the diagnostic LEDs to facilitate the troubleshooting process. In addition, the draw-thru design of the outdoor unit means that dirt accumulates on the outside surface of the coil. Coils can be cleaned quickly from the inside using a pressure hose and detergent.

On the indoor units, service and maintenance expense is reduced due to the permanent easy to clean filters. Also, error codes are displayed on the front panel to alert the user to certain system malfunctions.

## Built-in Reliability

Ductless system indoor and outdoor units are designed to provide years of trouble-free operation. Both the indoor and outdoor units are well protected. Whenever the microprocessor detects abnormal conditions, the unit stops and an error code appears.

Inverter systems provide additional reliability due to the soft start.

This refers to the ability of the inverter to start the compressor motor using reduced voltage and reduced current. This feature is beneficial from an electrical standpoint (eliminates current spikes) as well as an overall reliability standpoint due to reduced stress on all associated system components.

## Agency Listings

All systems are listed with AHRI (Air conditioning, Heating, and Refrigeration Institute) and are UL certified per UL 60335-2-40 standard.

**Manufacturer reserves the right to change, at any time, specifications and designs without notice and without obligations.**

# MODEL NUMBER NOMENCLATURE

OUTDOOR UNIT

37 MH R A C 12 A A 3

37 = OUTDOOR UNIT

MH = ALL

UNIT TYPE
R = OUTDOOR UNIT

MAJOR SERIES

SYSTEM TYPE
C = COOLING ONLY

VOLTAGE
1 = 115-1-60
3 = 208/230-1-60

VARIATIONS
A = STANDARD

MAXIMUM NUMBER OF FAN COIL UNITS THAT CAN BE CONNECTED TO THE OUTDOOR UNIT
A = 1:1

NOMINAL CAPACITY
09 - 0.75 TON
12 - 1 TON
18 - 1.5 TONS
24 - 2 TONS

Use of the AHRI Certified TM Mark indicates a manufacturer's participation in the program For verification of certification for individual products, go to www.ahridirectory.org.

# STANDARD FEATURES AND ACCESSORIES

| | |
|---|---|
| **Ease Of Installation** | |
| Low Voltage Controls | S |
| **Comfort Features** | |
| Microprocessor Controls | S |
| Auto Restart Function | S |
| **Energy Saving Features** | |
| Inverter Driven Compressor | S |
| **Safety And Reliability** | |
| 3 Minute Time Delay For Compressor | S |
| High Compressor Discharge Temperature | S |
| Low Voltage Protection | S |
| Compressor Overload Protection | S |
| Compressor Over Current Protection | S |
| IPM Module Protection | S |
| Condenser High Temp Protection in Cooling Mode | S |
| Aluminum Hydrophilic pre-coated fins | S |
| **Ease Of Service And Maintenance** | |
| Diagnostics | S |
| Liquid Line Pressure Taps | S |
| **Application Flexibility** | |
| Crankcase Heater | S |

### Legend

S - Standard
A - Accessory

## Outdoor Units

### Crankcase Unit

The crankcase heater is standard on all unit sizes. Heater clamps must be placed around the compressor oil stump.

# DIMENSIONS - COOLING ONLY

## Table 1 — Dimensions and Weights

| System Size | | 12K 115V | 9K | 12K | 18K | 24K |
|---|---|---|---|---|---|---|
| | | (115 V) | (208/230 V) | (208/230 V) | (208/230 V) | (208/230 V) |
| Height (H) | inch | 19.49 | 19.49 | 19.49 | 21.85 | 21.81 |
| | mm | 495 | 495 | 495 | 555 | 554 |
| Width (W) | inch | 28.35 | 28.35 | 28.35 | 30.12 | 31.69 |
| | mm | 720 | 720 | 720 | 765 | 805 |
| Depth (D) | inch | 10.63 | 10.63 | 10.63 | 11.93 | 12.99 |
| | mm | 270 | 270 | 270 | 303 | 330 |
| Weight -Net | lbs. | 50.26 | 46.96 | 47.84 | 59.97 | 67.02 |
| | kg | 22.8 | 21.3 | 21.7 | 27.2 | 30.4 |

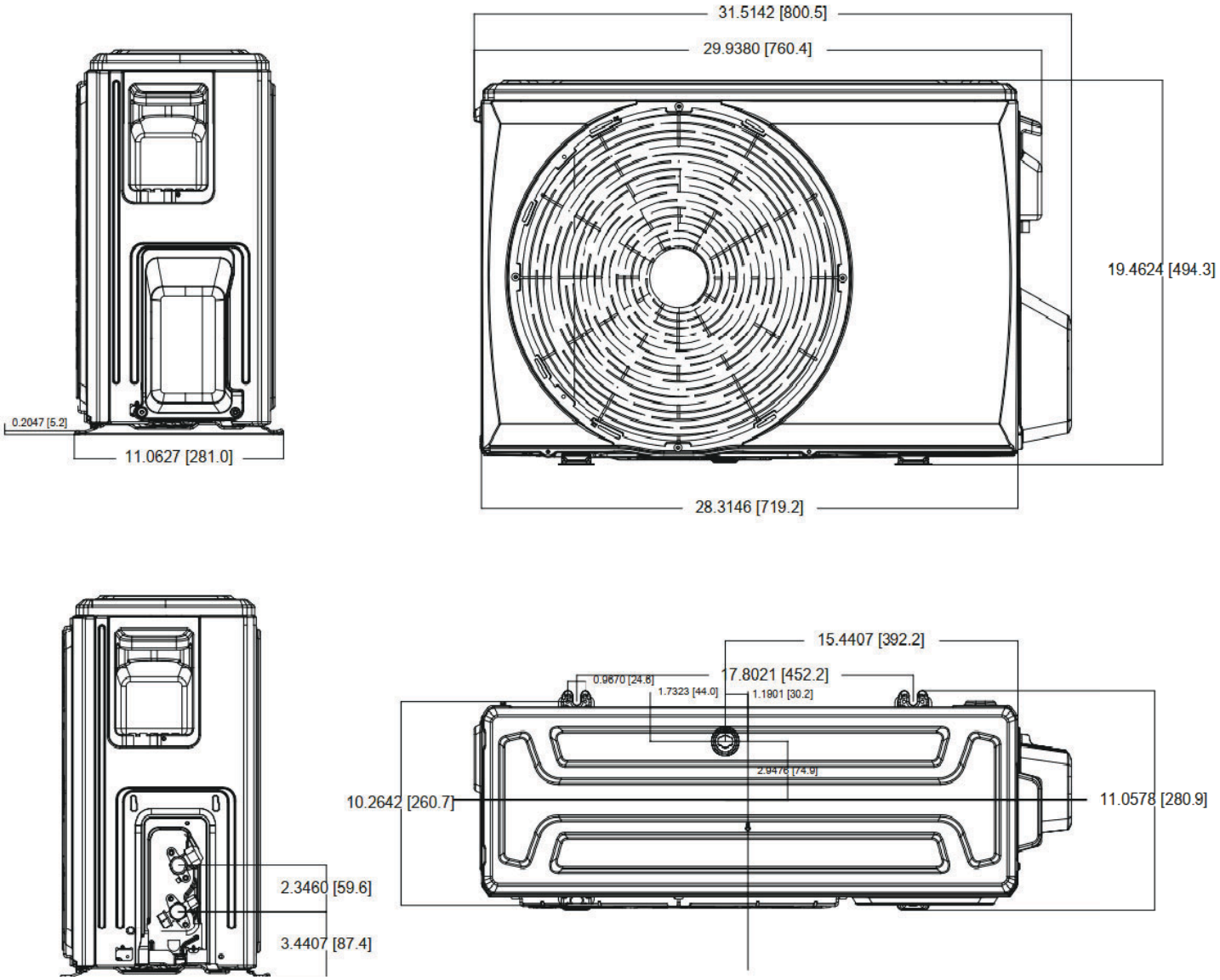


**Fig. 2 —Dimensions (9k/12k)**

# DIMENSIONS (CONT.)

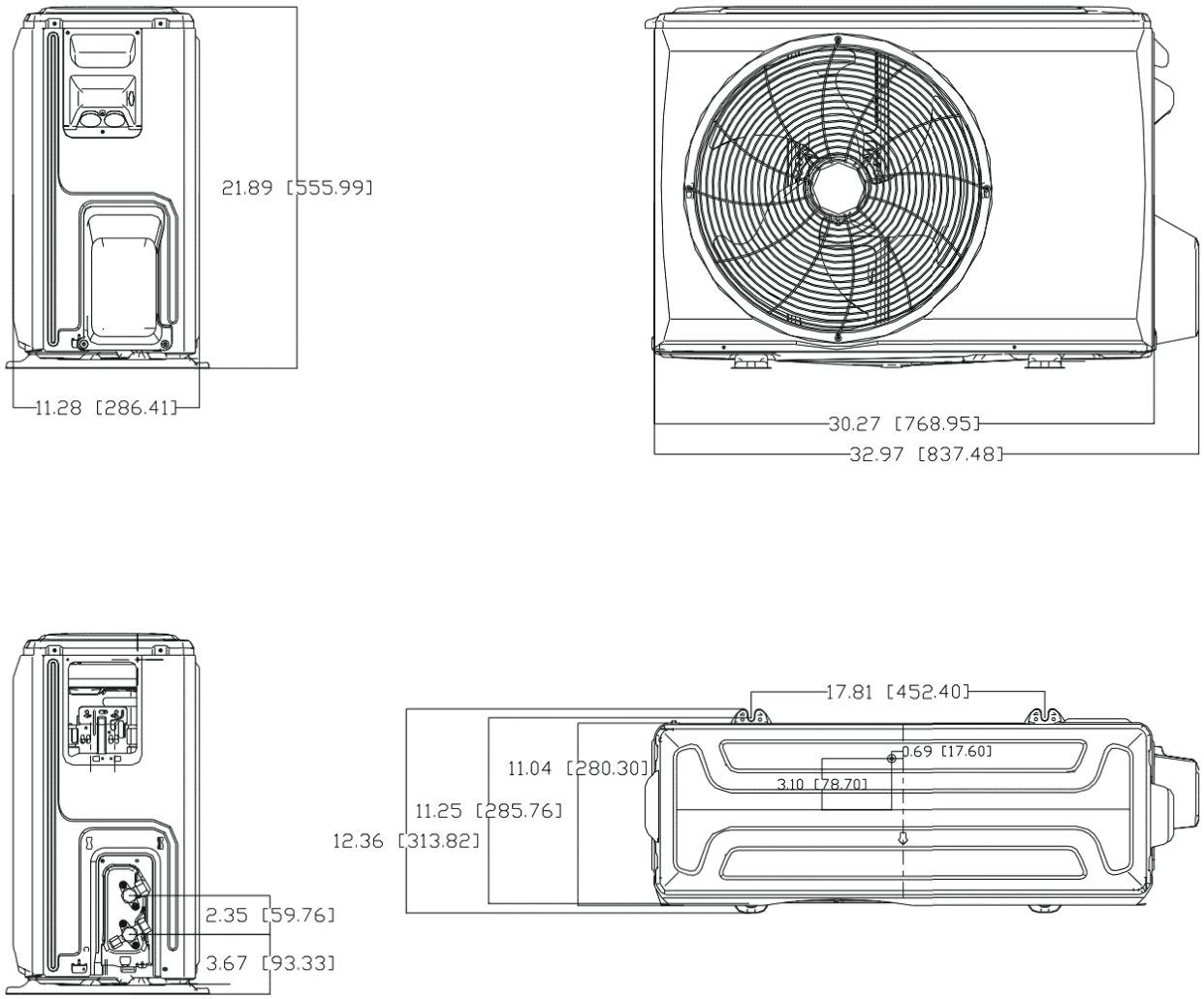


**Fig. 3 —Dimensions (18k)**

# DIMENSIONS (CONT.)

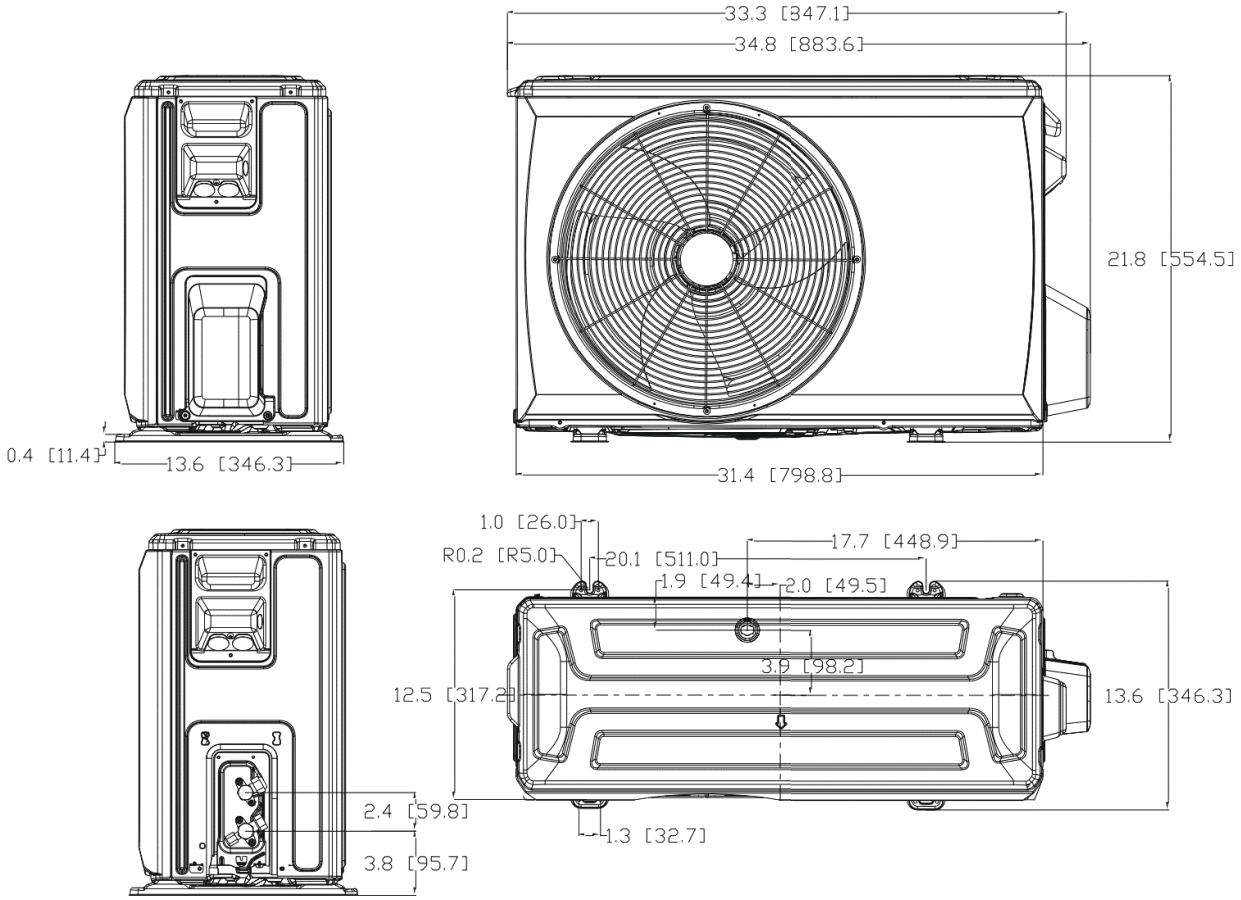


**Fig. 4 —Dimensions (24k)**

# CLEARANCES

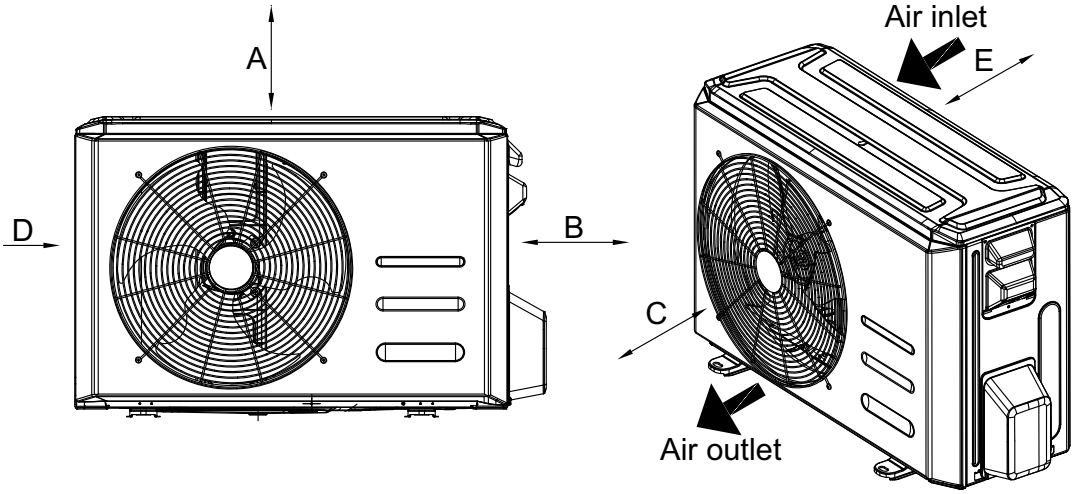


**Fig. 5 — Outdoor Unit Clearances**

**Table 2 — Outdoor Unit Clearance Dimensions**

| UNIT | MINIMUM VALUE in. (mm) |
|---|---|
| A | 20 (500) |
| B | 14 (350) |
| C | 20 (500) |
| D | 4 (100) |
| E | 4 (100) |

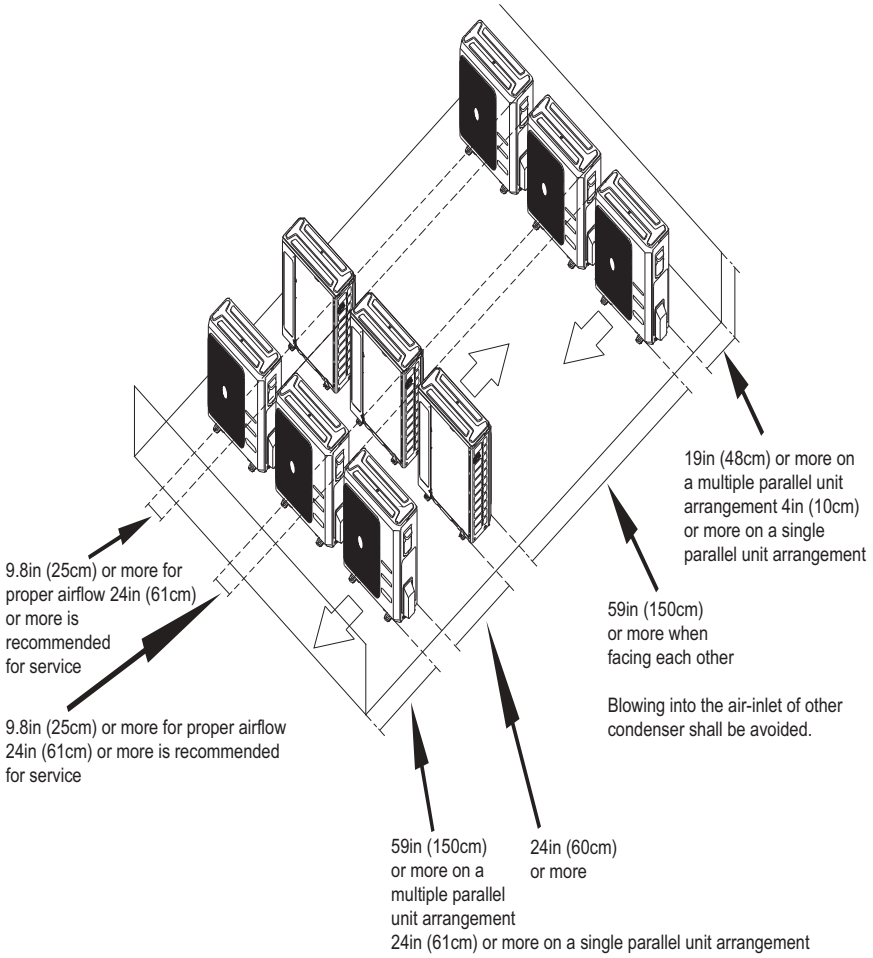


**Fig. 6 —Clearances for multiple units**

# SPECIFICATIONS - COOLING ONLY

## Table 3: Specifications - Cooling Only

| OUTDOOR MODEL | | | 37MHRAC12AA1 | 37MHRAC09AA3 | 37MHRAC12AA3 | 37MHRAC18AA3 | 37MHRAC24AA3 |
|---|---|---|---|---|---|---|---|
| POWER SUPPLY | | V;Ph;Hz | 115V;1Ph;60HZ | 208/230V;1Ph;60HZ | 208/230V;1Ph;60HZ | 208/230V;1Ph;60HZ | 208/230V;1Ph;60HZ |
| COMPRESSOR SPECIFICATIONS | Model | | KSK103D33UEZ3 | KSK103D33UEZ3 | KSK103D33UEZ3 | KSN140D58UFZ | KSN140D58UFZ |
| | Type | | ROTARY | ROTARY | ROTARY | ROTARY | ROTARY |
| | Brand | | GMCC | GMCC | GMCC | GMCC | GMCC |
| | Capacity | W | 2035/3255 | 2035/3255 | 2035/3255 | 4315 | 4315 |
| | | Btu/h | 6943/11106 | 6943/11106 | 6943/11106 | 14723 | 14723 |
| | Input | W | 325/826 | 325/826 | 325/826 | 1090 | 1090 |
| | Rated current | A | 2.40/5.65 | 2.40/5.65 | 2.40/5.65 | 7.2 | 7.2 |
| | Refrigerant Oil | | ESTER OIL | ESTER OIL | ESTER OIL | ESTER OIL | ESTER OIL |
| | Oil Type | | VG74 | VG74 | VG74 | VG74 | VG74 |
| | Oil Charge | fl. Oz | 10.48 | 10.48 | 10.48 | 14.88 | 14.88 |
| OUTDOOR FAN SPECIFICATIONS | Material | - | Acrylonitrile Styrene +20%GF | Acrylonitrile Styrene +20%GF | Acrylonitrile Styrene +20%GF | Acrylonitrile Styrene +20%GF | Acrylonitrile Styrene +20%GF |
| | Type | - | ZL-415*129*8-3KN | ZL-415*129*8-3KN | ZL-415*129*8-3KN | ZL-421*133*8-3KN | ZL-434*144*8-3KN |
| | Diameter | inch | 16.3 | 16.3 | 16.3 | 16.6 | 17.1 |
| | | mm | 415 | 415 | 415 | 421 | 434 |
| | Height | inch | 5.1 | 5.1 | 5.1 | 5.2 | 5.7 |
| | | mm | 129 | 129 | 129 | 133 | 144 |
| OUTDOOR MOTOR SPECIFICATIONS | Model | - | ZKFN-34-10-1-9 | ZKFN-34-10-1-9 | ZKFN-34-10-1-9 | ZKFN-34-10-1-9 | ZKFN-34-10-1-9 |
| | Type | - | DC | DC | DC | DC | DC |
| | Input | W | 35.4 | 35.4 | 35.4 | 35.4 | 62.0 |
| | Max. input | W | 81.3 | 81.3 | 81.3 | 81.3 | 81.3 |
| | Output | W | 26.6 | 26.6 | 26.6 | 26.6 | 46.5 |
| | FLA | A | 0.7 | 0.5 | 0.34 | 0.45 | 0.62 |
| | Rated HP | HP | 0.04 | 0.04 | 0.04 | 0.04 | 0.06 |
| | Range of current | Amps | 0.57~0.85 | 0.57~0.85 | 0.57~0.85 | 0.57~0.85 | 0.57~0.85 |
| | Rated current | Amps | 0.62 | 0.62 | 0.62 | 0.62 | 0.75 |
| | Speed | rev/min | 850/700/600 | 800/700/600 | 850/700/600 | 810/700/450 | 950/700/600 |
| | Rated RPM | rev/min | 850 | 800 | 850 | 810 | 950 |
| | Insulation class | - | E | E | E | E | E |
| | Safe class | - | IP24 | IP24 | IP24 | IP24 | IP24 |

**Manufacturer reserves the right to change, at any time, specifications and designs without notice and without obligations.**

## Table 3: Specifications - Cooling Only (Continued)

| OUTDOOR MODEL | | | 37MHRAC12AA1 | 37MHRAC09AA3 | 37MHRAC12AA3 | 37MHRAC18AA3 | 37MHRAC24AA3 |
|---|---|---|---|---|---|---|---|
| OUTDOOR REFRIGERANT COIL SPECIFICATIONS | Number of rows | Rows | 1 | 1 | 1 | 2 | 2 |
| | Tube outside dia. | inch | 0.197 | 0.197 | 0.197 | 0.197 | 0.197 |
| | | mm | Φ5 | Φ5 | Φ5 | Φ5 | Φ5 |
| | Nominal Tube Wall | mm | 0.00945 (0.24) | 0.00945 (0.24) | 0.00945 (0.24) | 0.00945 (0.24) | 0.00945 (0.24) |
| | Tube Enhancement | (Yes/ No) | Yes | Yes | Yes | Yes | Yes |
| | Tube Material | | Copper | Copper | Copper | Copper | Copper |
| | Tube pitch (a)x row pitch (b) | inch | 0.57x0.49 | 0.77x0.46 | 0.57x0.49 | 0.77x0.46 | 0.77x0.46 |
| | | mm | 14.5x12.56 | 19.5x11.6 | 14.5x12.56 | 19.5x11.6 | 19.5x11.6 |
| | Fin Spacing | FPI | 22 | 22 | 22 | 22 | 22 |
| | | mm | 1.2 | 1.2 | 1.2 | 1.2 | 1.2 |
| | Fin type | | Louvered | Louvered | Louvered | Louvered | Louvered |
| | Fin Material | | Gold hydrophilic aluminum | Gold hydrophilic aluminum | Gold hydrophilic aluminum | Gold hydrophilic aluminum | Gold hydrophilic aluminum |
| | Coil length x height x width | inch | 29.53x18.27x0.49 | 29.13x18.43x0.46 | 29.53x18.27x0.49 | 29.92x19.96x0.46+29.21x19.96x0.46 | 34.45x19.96x0.91 |
| | | mm | 750x464x12.56 | 740x468x11.6 | 750x464x12.56 | 760x507x11.6+742x507x11.6 | 875x507x23.2 |
| | Number of circuits | # | 2 | 2 | 2 | 2 | 4 |
| | High Burst Pressure | Psi (MPa) | 550(3.79) | 550(3.79) | 550(3.79) | 550(3.79) | 550(3.79) |
| | Low Burst Pressure | Psi (MPa) | 340(2.34) | 340(2.34) | 340(2.34) | 340(2.34) | 340(2.34) |
| PIPING AND REFRIGERANT INFORMATION | Refrigerant Type | Type | R454B | R454B | R454B | R454B | R454B |
| | Charge Amount | lb. (kg) | 1.23(0.56) | 1.08(0.49) | 1.23(0.56) | 1.72(0.78) | 2.01(0.91) |
| | Additional refrig-erant charge | Oz/ft (g/m) | 0.16(15) | 0.16(15) | 0.16(15) | 0.16(15) | 0.32(30) |
| | Liquid Pipe (size - connection type) | In (mm) | 1/4in (6.35mm) | 1/4in (6.35mm) | 1/4in (6.35mm) | 1/4in (6.35mm) | 3/8in (9.52mm) |
| | Suction Pipe (size - connection type) | In (mm) | 3/8in (9.52mm) | 3/8in (9.52mm) | 3/8in (9.52mm) | 1/2in (12.7mm) | 5/8in (15.9mm) |
| | Min. Piping Length | ft. (m) | 10 (3) | 10 (3) | 10 (3) | 10 (3) | 10 (3) |
| | Standard Piping Length | ft. (m) | 24.6 (7.5) | 24.6 (7.5) | 24.6 (7.5) | 24.6 (7.5) | 24.6 (7.5) |
| | Max. Piping Length with no additional refrig-erant charge per System | ft. (m) | 24.6 (7.5) | 24.6 (7.5) | 24.6 (7.5) | 24.6 (7.5) | 24.6 (7.5) |
| | Total Maximum Piping Length per system | ft. (m) | 82.02(25) | 82.02(25) | 82.02(25) | 98.42(30) | 164.04(50) |
| | Max. out-door-indoor height difference (OU higher than IU) | ft. (m) | 49.21(15) | 49.21(15) | 49.21(15) | 65.62(20) | 82.02(25) |
| | Max. out-door-indoor height difference (IU higher than OU) | ft. (m) | 49.21(15) | 49.21(15) | 49.21(15) | 65.62(20) | 82.02(25) |

# COMPATIBILITY

### Table 4 — Compatible Indoor Units

| MODEL | INDOOR UNIT | OUTDOOR UNIT |
|---|---|---|
| 12K (115V) | 45MHHAC12XC1 | 37MHRAC12AA1 |
| 9K | 45MHHAC09XC3 | 37MHRAC09AA3 |
| 12K | 45MHHAC12XC3 | 37MHRAC12AA3 |
| 18K | 45MHHAC18XC3 | 37MHRAC18AA3 |
| 24K | 45MHHAC24XC3 | 37MHRAC24AA3 |

**Manufacturer reserves the right to change, at any time, specifications and designs without notice and without obligations.**

# SYSTEM PERFORMANCE - COOLING ONLY

## Table 5: System Performance - Cooling Only

| INDOOR UNIT TYPE | | | ENTRY TIER HIGH WALL CO | | | | |
|---|---|---|---|---|---|---|---|
| INDOOR MODEL | | | 45MHHAC12XC1 | 45MHHAC09XC3 | 45MHHAC12XC3 | 45MHHAC18XC3 | 45MHHAC24XC3 |
| OUTDOOR MODEL | | | 37MHRAC12AA1 | 37MHRAC09AA3 | 37MHRAC12AA3 | 337MHRAC18AA3 | 37MHRAC24AA3 |
| POWER SUPPLY | | V; Ph;Hz | 115V; 1Ph;60HZ | 208/230V;1 Ph;60HZ | 208/230V; 1Ph;60HZ | 208/230V; 1Ph;60HZ | 208/230V; 1Ph;60HZ |
| PERFORMANCE DATA | Cooling Rated Capacity (DOE A2 - 95°F) | Btu/h | 11500 | 9000 | 11500 | 17500 | 22000 |
| | Cooling Capacity Range | Btu/h | 2600~12100 | 2200~11200 | 2600~12300 | 3100~18400 | 5800~22600 |
| | SEER2 | Btu/h.W | 21.5 | 20.5 | 21 | 22.2 | 21.1 |
| | EER2 (DOE A2 - 95°F) | Btu/h.W | 12 | 12.5 | 12 | 11.7 | 10.2 |
| | Heating Rated Capacity (DOE H12 - 47°F) | Btu/h | N/A | N/A | N/A | N/A | N/A |
| | Heating Capacity Range | Btu/h | N/A | N/A | N/A | N/A | N/A |
| | COP (DOE H12 - 47°F) | W/W | N/A | N/A | N/A | N/A | N/A |
| | HSPF2 IV | Btu/h.W | N/A | N/A | N/A | N/A | N/A |
| | HSPF2 V | Btu/h.W | N/A | N/A | N/A | N/A | N/A |
| | Cooling Rated Capacity (DOE B2 - 82°F) | Btu/h | 12000 | 9500 | 12200 | 18600 | 24000 |
| | EER2 (DOE B2 - 82°F) | Btu/h.W | 14.7 | 16.3 | 14.4 | 14.5 | 13.7 |
| | Heating Rated Capacity (DOE H32 - 17°F) | Btu/h | N/A | N/A | N/A | N/A | N/A |
| | COP (DOE H32 - 17°F) | W/W | N/A | N/A | N/A | N/A | N/A |
| | Heating Maximum Capacity (17°F) | Btu/h | N/A | N/A | N/A | N/A | N/A |
| | Heating Rated Capacity (ODE H42 - 5°F) | Btu/h | N/A | N/A | N/A | N/A | N/A |
| | COP (DOE H42 - 5°F) | W/W | N/A | N/A | N/A | N/A | N/A |
| | Heating Maximum Capacity (5°F) | Btu/h | N/A | N/A | N/A | N/A | N/A |

# COOLING PERFORMANCE DATA - COOLING ONLY

## Table 6: Cooling Performance 115V, 12K

| AIRFLOW (CFM) | OUTDOOR DB °F (°C) | ID WB°F (°C) | 60.8°F(16.0°C) | | | | | 64.4°F(18.0°C) | | | | | 67°F(19.4°C) | | | | | 71.6°F(22.0°C) | | | | |
|---|---|---|---|---|---|---|---|---|---|---|---|---|---|---|---|---|---|---|---|---|---|---|
| | | ID DB°F (°C) | 73.4°F (23.0°C) | 77.0°F (25.0°C) | 80.0°F (26.7°C) | 80.6°F (27.0°C) | 84.2°F (29.0°C) | 73.4°F (23.0°C) | 77.0°F (25.0°C) | 80.0°F 26.7°C) | 80.6°F (27.0°C) | 84.2°F (29.0°C) | 73.4°F (23.0°C) | 77.0°F (25.0°C) | 80.0°F (26.7°C) | 80.6°F (27.0°C) | 84.2°F (29.0°C) | 73.4°F (23.0°C) | 77.0°F( 25.0°C) | 80.0°F (26.7°C) | 80.6°F (27.0°C) | 84.2°F (29.0°C) |
| 212 | 5°F(-15.0°C) | TC | 10286 | 10300 | 10311 | 10311 | 10325 | 10906 | 10919 | 10930 | 10932 | 10945 | 11558 | 11573 | 11585 | 11588 | 11601 | 12254 | 12267 | 12281 | 12283 | 12298 |
| | | S/T | 0.45 | 0.53 | 0.61 | 0.61 | 0.69 | 0.48 | 0.56 | 0.64 | 0.64 | 0.73 | 0.51 | 0.60 | 0.68 | 0.68 | 0.78 | 0.54 | 0.63 | 0.72 | 0.72 | 0.82 |
| | | PI | 0.46 | 0.46 | 0.46 | 0.46 | 0.46 | 0.48 | 0.48 | 0.48 | 0.48 | 0.49 | 0.51 | 0.51 | 0.51 | 0.51 | 0.51 | 0.54 | 0.54 | 0.54 | 0.54 | 0.55 |
| | 14°F(-10.0°C) | TC | 11116 | 11131 | 11143 | 11144 | 11159 | 11786 | 11800 | 11812 | 11814 | 11828 | 12490 | 12506 | 12520 | 12523 | 12537 | 13243 | 13257 | 13272 | 13274 | 13290 |
| | | S/T | 0.45 | 0.53 | 0.61 | 0.61 | 0.69 | 0.48 | 0.57 | 0.64 | 0.64 | 0.73 | 0.51 | 0.60 | 0.68 | 0.68 | 0.78 | 0.54 | 0.64 | 0.72 | 0.72 | 0.82 |
| | | PI | 0.45 | 0.45 | 0.45 | 0.45 | 0.45 | 0.47 | 0.48 | 0.48 | 0.48 | 0.48 | 0.50 | 0.50 | 0.50 | 0.50 | 0.50 | 0.53 | 0.53 | 0.53 | 0.53 | 0.53 |
| | 17°F(-8.3°C) | TC | 11393 | 11408 | 11420 | 11421 | 11436 | 12079 | 12094 | 12106 | 12108 | 12122 | 12801 | 12818 | 12832 | 12834 | 12849 | 13572 | 13587 | 13602 | 13604 | 13621 |
| | | S/T | 0.46 | 0.54 | 0.61 | 0.61 | 0.69 | 0.48 | 0.57 | 0.64 | 0.64 | 0.74 | 0.51 | 0.60 | 0.68 | 0.68 | 0.78 | 0.54 | 0.64 | 0.72 | 0.72 | 0.83 |
| | | PI | 0.44 | 0.45 | 0.45 | 0.45 | 0.45 | 0.47 | 0.47 | 0.47 | 0.47 | 0.47 | 0.50 | 0.50 | 0.50 | 0.50 | 0.50 | 0.53 | 0.53 | 0.53 | 0.53 | 0.53 |
| | 23°F(-5.0°C) | TC | 11104 | 11119 | 11131 | 11132 | 11147 | 11773 | 11787 | 11799 | 11801 | 11815 | 12477 | 12493 | 12507 | 12509 | 12523 | 13228 | 13243 | 13257 | 13259 | 13276 |
| | | S/T | 0.46 | 0.54 | 0.61 | 0.61 | 0.70 | 0.49 | 0.57 | 0.65 | 0.65 | 0.74 | 0.52 | 0.60 | 0.69 | 0.69 | 0.78 | 0.55 | 0.64 | 0.73 | 0.73 | 0.83 |
| | | PI | 0.49 | 0.49 | 0.49 | 0.49 | 0.49 | 0.52 | 0.52 | 0.52 | 0.52 | 0.52 | 0.55 | 0.55 | 0.55 | 0.55 | 0.55 | 0.58 | 0.58 | 0.58 | 0.58 | 0.59 |
| | 35°F(1.7°C) | TC | 10527 | 10541 | 10552 | 10553 | 10567 | 11161 | 11174 | 11185 | 11188 | 11201 | 11828 | 11843 | 11856 | 11859 | 11872 | 12541 | 12554 | 12568 | 12570 | 12585 |
| | | S/T | 0.46 | 0.54 | 0.61 | 0.61 | 0.70 | 0.49 | 0.57 | 0.65 | 0.65 | 0.74 | 0.52 | 0.61 | 0.69 | 0.69 | 0.79 | 0.55 | 0.64 | 0.73 | 0.73 | 0.83 |
| | | PI | 0.58 | 0.58 | 0.58 | 0.58 | 0.58 | 0.61 | 0.62 | 0.62 | 0.62 | 0.62 | 0.65 | 0.65 | 0.65 | 0.65 | 0.65 | 0.69 | 0.69 | 0.69 | 0.69 | 0.69 |
| | 41°F(5.0°C) | TC | 10440 | 10454 | 10466 | 10466 | 10480 | 11070 | 11083 | 11094 | 11096 | 11109 | 11731 | 11746 | 11759 | 11761 | 11775 | 12438 | 12451 | 12465 | 12467 | 12482 |
| | | S/T | 0.46 | 0.54 | 0.62 | 0.62 | 0.70 | 0.49 | 0.57 | 0.65 | 0.65 | 0.74 | 0.52 | 0.61 | 0.69 | 0.69 | 0.79 | 0.55 | 0.65 | 0.73 | 0.73 | 0.84 |
| | | PI | 0.49 | 0.49 | 0.49 | 0.49 | 0.49 | 0.52 | 0.52 | 0.52 | 0.52 | 0.52 | 0.55 | 0.55 | 0.55 | 0.55 | 0.55 | 0.58 | 0.58 | 0.58 | 0.58 | 0.58 |
| | 47°F(8.3°C) | TC | 10354 | 10368 | 10379 | 10380 | 10394 | 10978 | 10991 | 11002 | 11004 | 11017 | 11634 | 11649 | 11662 | 11664 | 11677 | 12335 | 12348 | 12362 | 12364 | 12379 |
| | | S/T | 0.46 | 0.54 | 0.62 | 0.62 | 0.70 | 0.49 | 0.58 | 0.65 | 0.65 | 0.75 | 0.52 | 0.61 | 0.69 | 0.69 | 0.79 | 0.55 | 0.65 | 0.74 | 0.74 | 0.84 |
| | | PI | 0.39 | 0.40 | 0.40 | 0.40 | 0.40 | 0.42 | 0.42 | 0.42 | 0.42 | 0.42 | 0.44 | 0.44 | 0.44 | 0.44 | 0.45 | 0.47 | 0.47 | 0.47 | 0.47 | 0.47 |
| | 50°F(10.0°C) | TC | 10398 | 10412 | 10423 | 10424 | 10438 | 11025 | 11038 | 11049 | 11051 | 11064 | 11684 | 11699 | 11712 | 11714 | 11727 | 12387 | 12401 | 12414 | 12416 | 12432 |
| | | S/T | 0.47 | 0.55 | 0.62 | 0.62 | 0.71 | 0.49 | 0.58 | 0.66 | 0.66 | 0.75 | 0.52 | 0.61 | 0.70 | 0.70 | 0.79 | 0.55 | 0.65 | 0.74 | 0.74 | 0.84 |
| | | PI | 0.41 | 0.41 | 0.41 | 0.41 | 0.41 | 0.43 | 0.43 | 0.43 | 0.43 | 0.43 | 0.46 | 0.46 | 0.46 | 0.46 | 0.46 | 0.49 | 0.49 | 0.49 | 0.49 | 0.49 |
| | 59°F(15.0°C) | TC | 10531 | 10545 | 10556 | 10557 | 10571 | 11165 | 11179 | 11190 | 11192 | 11205 | 11832 | 11848 | 11861 | 11863 | 11876 | 12545 | 12559 | 12573 | 12575 | 12590 |
| | | S/T | 0.47 | 0.55 | 0.62 | 0.62 | 0.71 | 0.50 | 0.58 | 0.66 | 0.66 | 0.75 | 0.53 | 0.62 | 0.70 | 0.70 | 0.80 | 0.56 | 0.65 | 0.74 | 0.74 | 0.85 |
| | | PI | 0.45 | 0.45 | 0.45 | 0.45 | 0.45 | 0.48 | 0.48 | 0.48 | 0.48 | 0.48 | 0.51 | 0.51 | 0.51 | 0.51 | 0.51 | 0.54 | 0.54 | 0.54 | 0.54 | 0.54 |
| | 68°F(20.0°C) | TC | 10663 | 10678 | 10689 | 10690 | 10704 | 11306 | 11319 | 11330 | 11333 | 11346 | 11981 | 11997 | 12010 | 12013 | 12026 | 12703 | 12717 | 12731 | 12733 | 12749 |
| | | S/T | 0.48 | 0.56 | 0.64 | 0.64 | 0.73 | 0.51 | 0.60 | 0.68 | 0.68 | 0.77 | 0.54 | 0.63 | 0.72 | 0.72 | 0.82 | 0.57 | 0.67 | 0.76 | 0.76 | 0.87 |
| | | PI | 0.49 | 0.49 | 0.49 | 0.49 | 0.49 | 0.52 | 0.52 | 0.52 | 0.52 | 0.52 | 0.55 | 0.55 | 0.55 | 0.55 | 0.56 | 0.59 | 0.59 | 0.59 | 0.59 | 0.59 |
| | 77°F(25.0°C) | TC | 10796 | 10810 | 10822 | 10822 | 10837 | 11446 | 11460 | 11471 | 11474 | 11487 | 12130 | 12146 | 12160 | 12162 | 12175 | 12861 | 12875 | 12889 | 12891 | 12907 |
| | | S/T | 0.49 | 0.57 | 0.65 | 0.65 | 0.74 | 0.52 | 0.61 | 0.69 | 0.69 | 0.78 | 0.55 | 0.64 | 0.73 | 0.73 | 0.83 | 0.58 | 0.68 | 0.77 | 0.77 | 0.88 |
| | | PI | 0.53 | 0.54 | 0.54 | 0.54 | 0.54 | 0.57 | 0.57 | 0.57 | 0.57 | 0.57 | 0.60 | 0.60 | 0.60 | 0.60 | 0.60 | 0.64 | 0.64 | 0.64 | 0.64 | 0.64 |

Manufacturer reserves the right to change, at any time, specifications and designs without notice and without obligations.

# Table 6: Cooling Performance 115V, 12K (Continued)

| AIRFLOW (CFM) | OUTDOOR DB °F (°C) | ID WB°F (°C) | 60.8°F(16.0°C) | | | | | 64.4°F(18.0°C) | | | | | 67°F(19.4°C) | | | | | 71.6°F(22.0°C) | | | | |
|---|---|---|---|---|---|---|---|---|---|---|---|---|---|---|---|---|---|---|---|---|---|---|
| | | ID DB°F (°C) | 73.4°F (23.0°C) | 77.0°F (25.0°C) | 80.0°F (26.7°C) | 80.6°F (27.0°C) | 84.2°F (29.0°C) | 73.4°F (23.0°C) | 77.0°F (25.0°C) | 80.0°F 26.7°C) | 80.6°F (27.0°C) | 84.2°F (29.0°C) | 73.4°F (23.0°C) | 77.0°F (25.0°C) | 80.0°F (26.7°C) | 80.6°F (27.0°C) | 84.2°F (29.0°C) | 73.4°F (23.0°C) | 77.0°F( 25.0°C) | 80.0°F (26.7°C) | 80.6°F (27.0°C) | 84.2°F (29.0°C) |
| 212 | 82°F(27.8°C) | TC | 10739 | 10754 | 10765 | 10766 | 10780 | 11386 | 11400 | 11411 | 11413 | 11427 | 12067 | 12082 | 12096 | 12098 | 12111 | 12794 | 12807 | 12821 | 12823 | 12839 |
| | | S/T | 0.49 | 0.58 | 0.66 | 0.66 | 0.75 | 0.52 | 0.61 | 0.70 | 0.70 | 0.79 | 0.55 | 0.65 | 0.74 | 0.74 | 0.84 | 0.59 | 0.69 | 0.78 | 0.78 | 0.89 |
| | | PI | 0.59 | 0.59 | 0.59 | 0.59 | 0.59 | 0.62 | 0.62 | 0.62 | 0.62 | 0.63 | 0.66 | 0.66 | 0.66 | 0.66 | 0.66 | 0.70 | 0.70 | 0.70 | 0.70 | 0.70 |
| | 86°F(30.0°C) | TC | 10529 | 10543 | 10555 | 10555 | 10569 | 11164 | 11177 | 11188 | 11190 | 11203 | 11831 | 11846 | 11859 | 11861 | 11875 | 12543 | 12557 | 12571 | 12573 | 12588 |
| | | S/T | 0.50 | 0.59 | 0.67 | 0.67 | 0.76 | 0.53 | 0.62 | 0.71 | 0.71 | 0.80 | 0.56 | 0.66 | 0.75 | 0.75 | 0.85 | 0.59 | 0.70 | 0.79 | 0.79 | 0.90 |
| | | PI | 0.67 | 0.67 | 0.67 | 0.67 | 0.67 | 0.71 | 0.71 | 0.71 | 0.71 | 0.71 | 0.75 | 0.75 | 0.75 | 0.75 | 0.75 | 0.80 | 0.80 | 0.80 | 0.80 | 0.80 |
| | 95°F(35.0°C) | TC | 10057 | 10070 | 10081 | 10082 | 10095 | 10663 | 10676 | 10686 | 10688 | 10701 | 11300 | 11315 | 11327 | 11329 | 11342 | 11981 | 11994 | 12007 | 12009 | 12024 |
| | | S/T | 0.50 | 0.59 | 0.67 | 0.67 | 0.76 | 0.53 | 0.62 | 0.71 | 0.71 | 0.80 | 0.56 | 0.66 | 0.75 | 0.75 | 0.85 | 0.59 | 0.70 | 0.79 | 0.79 | 0.90 |
| | | PI | 0.85 | 0.85 | 0.85 | 0.85 | 0.85 | 0.90 | 0.90 | 0.90 | 0.90 | 0.90 | 0.95 | 0.96 | 0.96 | 0.96 | 0.96 | 1.01 | 1.01 | 1.01 | 1.01 | 1.02 |
| | 104°F(40.0°C) | TC | 9132 | 9144 | 9154 | 9154 | 9166 | 9682 | 9693 | 9703 | 9705 | 9716 | 10260 | 10274 | 10285 | 10287 | 10299 | 10879 | 10890 | 10902 | 10904 | 10918 |
| | | S/T | 0.51 | 0.60 | 0.68 | 0.68 | 0.78 | 0.54 | 0.64 | 0.72 | 0.72 | 0.82 | 0.57 | 0.67 | 0.77 | 0.77 | 0.87 | 0.61 | 0.71 | 0.81 | 0.81 | 0.93 |
| | | PI | 0.88 | 0.88 | 0.88 | 0.88 | 0.88 | 0.93 | 0.93 | 0.93 | 0.93 | 0.93 | 0.99 | 0.99 | 0.99 | 0.99 | 0.99 | 1.05 | 1.05 | 1.05 | 1.05 | 1.05 |
| | 110°F(43.0°C) | TC | 8576 | 8588 | 8597 | 8598 | 8609 | 9093 | 9104 | 9113 | 9115 | 9126 | 9637 | 9649 | 9660 | 9662 | 9672 | 10217 | 10228 | 10239 | 10241 | 10254 |
| | | S/T | 0.53 | 0.62 | 0.71 | 0.71 | 0.81 | 0.56 | 0.66 | 0.75 | 0.75 | 0.85 | 0.60 | 0.70 | 0.79 | 0.79 | 0.91 | 0.63 | 0.74 | 0.84 | 0.84 | 0.96 |
| | | PI | 0.89 | 0.90 | 0.90 | 0.90 | 0.90 | 0.95 | 0.95 | 0.95 | 0.95 | 0.95 | 1.01 | 1.01 | 1.01 | 1.01 | 1.01 | 1.07 | 1.07 | 1.07 | 1.07 | 1.07 |
| | 115°F(46.0°C) | TC | 6798 | 6807 | 6815 | 6815 | 6824 | 7208 | 7216 | 7223 | 7225 | 7233 | 7638 | 7648 | 7657 | 7658 | 7667 | 8099 | 8107 | 8116 | 8118 | 8128 |
| | | S/T | 0.54 | 0.63 | 0.72 | 0.72 | 0.82 | 0.57 | 0.67 | 0.76 | 0.76 | 0.86 | 0.60 | 0.71 | 0.80 | 0.80 | 0.92 | 0.64 | 0.75 | 0.85 | 0.85 | 0.97 |
| | | PI | 0.76 | 0.76 | 0.77 | 0.77 | 0.77 | 0.81 | 0.81 | 0.81 | 0.81 | 0.81 | 0.86 | 0.86 | 0.86 | 0.86 | 0.86 | 0.91 | 0.91 | 0.91 | 0.91 | 0.91 |
| | 122°F(50.0°C) | TC | 4427 | 4433 | 4438 | 4438 | 4444 | 4694 | 4699 | 4704 | 4705 | 4710 | 4974 | 4981 | 4986 | 4987 | 4993 | 5274 | 5280 | 5285 | 5286 | 5293 |
| | | S/T | 0.55 | 0.64 | 0.73 | 0.73 | 0.83 | 0.58 | 0.68 | 0.78 | 0.78 | 0.88 | 0.62 | 0.72 | 0.82 | 0.82 | 0.94 | 0.65 | 0.77 | 0.87 | 0.87 | 0.99 |
| | | PI | 0.59 | 0.59 | 0.59 | 0.59 | 0.59 | 0.63 | 0.63 | 0.63 | 0.63 | 0.63 | 0.66 | 0.66 | 0.66 | 0.66 | 0.67 | 0.70 | 0.70 | 0.70 | 0.70 | 0.71 |
| 253 | 5°F(-15.0°C) | TC | 10521 | 10536 | 10547 | 10547 | 10562 | 11156 | 11169 | 11180 | 11182 | 11195 | 11822 | 11837 | 11851 | 11853 | 11866 | 12534 | 12548 | 12562 | 12564 | 12579 |
| | | S/T | 0.46 | 0.54 | 0.62 | 0.62 | 0.71 | 0.49 | 0.58 | 0.66 | 0.66 | 0.75 | 0.52 | 0.61 | 0.70 | 0.70 | 0.79 | 0.55 | 0.65 | 0.74 | 0.74 | 0.84 |
| | | PI | 0.47 | 0.47 | 0.47 | 0.47 | 0.47 | 0.49 | 0.50 | 0.50 | 0.50 | 0.50 | 0.52 | 0.52 | 0.53 | 0.53 | 0.53 | 0.56 | 0.56 | 0.56 | 0.56 | 0.56 |
| | 14°F(-10.0°C) | TC | 11371 | 11386 | 11398 | 11399 | 11414 | 12056 | 12070 | 12082 | 12084 | 12099 | 12776 | 12793 | 12807 | 12809 | 12824 | 13546 | 13561 | 13575 | 13577 | 13594 |
| | | S/T | 0.47 | 0.55 | 0.62 | 0.62 | 0.71 | 0.49 | 0.58 | 0.66 | 0.66 | 0.75 | 0.52 | 0.61 | 0.70 | 0.70 | 0.79 | 0.55 | 0.65 | 0.74 | 0.74 | 0.84 |
| | | PI | 0.46 | 0.46 | 0.46 | 0.46 | 0.46 | 0.49 | 0.49 | 0.49 | 0.49 | 0.49 | 0.51 | 0.51 | 0.52 | 0.52 | 0.52 | 0.55 | 0.55 | 0.55 | 0.55 | 0.55 |
| | 17°F(-8.3°C) | TC | 11654 | 11669 | 11682 | 11682 | 11698 | 12356 | 12370 | 12383 | 12385 | 12400 | 13094 | 13111 | 13126 | 13128 | 13143 | 13883 | 13898 | 13913 | 13915 | 13933 |
| | | S/T | 0.47 | 0.55 | 0.62 | 0.62 | 0.71 | 0.49 | 0.58 | 0.66 | 0.66 | 0.75 | 0.52 | 0.62 | 0.70 | 0.70 | 0.80 | 0.56 | 0.65 | 0.74 | 0.74 | 0.84 |
| | | PI | 0.45 | 0.46 | 0.46 | 0.46 | 0.46 | 0.48 | 0.48 | 0.48 | 0.48 | 0.48 | 0.51 | 0.51 | 0.51 | 0.51 | 0.51 | 0.54 | 0.54 | 0.54 | 0.54 | 0.54 |
| | 23°F(-5.0°C) | TC | 11358 | 11374 | 11386 | 11386 | 11402 | 12043 | 12057 | 12069 | 12071 | 12086 | 12762 | 12779 | 12793 | 12795 | 12810 | 13531 | 13546 | 13561 | 13563 | 13580 |
| | | S/T | 0.47 | 0.55 | 0.63 | 0.63 | 0.71 | 0.50 | 0.58 | 0.66 | 0.66 | 0.76 | 0.53 | 0.62 | 0.70 | 0.70 | 0.80 | 0.56 | 0.66 | 0.74 | 0.74 | 0.85 |
| | | PI | 0.50 | 0.50 | 0.50 | 0.50 | 0.50 | 0.53 | 0.53 | 0.53 | 0.53 | 0.53 | 0.56 | 0.56 | 0.56 | 0.56 | 0.56 | 0.60 | 0.60 | 0.60 | 0.60 | 0.60 |

Manufacturer reserves the right to change, at any time, specifications and designs without notice and without obligations.

# Table 6: Cooling Performance 115V, 12K (Continued)

| AIRFLOW (CFM) | OUTDOOR DB °F (°C) | ID WB°F (°C) | 60.8°F(16.0°C) | | | | | 64.4°F(18.0°C) | | | | | 67°F(19.4°C) | | | | | 71.6°F(22.0°C) | | | | |
|---|---|---|---|---|---|---|---|---|---|---|---|---|---|---|---|---|---|---|---|---|---|---|
| | | ID DB°F (°C) | 73.4°F (23.0°C) | 77.0°F (25.0°C) | 80.0°F (26.7°C) | 80.6°F (27.0°C) | 84.2°F (29.0°C) | 73.4°F (23.0°C) | 77.0°F (25.0°C) | 80.0°F 26.7°C) | 80.6°F (27.0°C) | 84.2°F (29.0°C) | 73.4°F (23.0°C) | 77.0°F (25.0°C) | 80.0°F (26.7°C) | 80.6°F (27.0°C) | 84.2°F (29.0°C) | 73.4°F (23.0°C) | 77.0°F( 25.0°C) | 80.0°F (26.7°C) | 80.6°F (27.0°C) | 84.2°F (29.0°C) |
| 253 | 35°F(1.7°C) | TC | 10768 | 10782 | 10794 | 10794 | 10809 | 11417 | 11430 | 11441 | 11444 | 11457 | 12099 | 12114 | 12128 | 12130 | 12144 | 12828 | 12841 | 12855 | 12857 | 12873 |
| | | S/T | 0.47 | 0.55 | 0.63 | 0.63 | 0.72 | 0.50 | 0.59 | 0.67 | 0.67 | 0.76 | 0.53 | 0.62 | 0.71 | 0.71 | 0.80 | 0.56 | 0.66 | 0.75 | 0.75 | 0.85 |
| | | PI | 0.59 | 0.59 | 0.59 | 0.59 | 0.60 | 0.63 | 0.63 | 0.63 | 0.63 | 0.63 | 0.67 | 0.67 | 0.67 | 0.67 | 0.67 | 0.71 | 0.71 | 0.71 | 0.71 | 0.71 |
| | 41°F(5.0°C) | TC | 10679 | 10694 | 10705 | 10706 | 10720 | 11323 | 11336 | 11347 | 11350 | 11363 | 11999 | 12015 | 12028 | 12031 | 12044 | 12722 | 12736 | 12750 | 12752 | 12768 |
| | | S/T | 0.47 | 0.55 | 0.63 | 0.63 | 0.72 | 0.50 | 0.59 | 0.67 | 0.67 | 0.76 | 0.53 | 0.62 | 0.71 | 0.71 | 0.81 | 0.56 | 0.66 | 0.75 | 0.75 | 0.85 |
| | | PI | 0.50 | 0.50 | 0.50 | 0.50 | 0.50 | 0.53 | 0.53 | 0.53 | 0.53 | 0.53 | 0.56 | 0.56 | 0.56 | 0.56 | 0.56 | 0.59 | 0.59 | 0.60 | 0.60 | 0.60 |
| | 47°F(8.3°C) | TC | 10591 | 10605 | 10617 | 10617 | 10631 | 11229 | 11243 | 11254 | 11256 | 11269 | 11900 | 11916 | 11929 | 11931 | 11944 | 12617 | 12631 | 12645 | 12647 | 12662 |
| | | S/T | 0.47 | 0.56 | 0.63 | 0.63 | 0.72 | 0.50 | 0.59 | 0.67 | 0.67 | 0.76 | 0.53 | 0.62 | 0.71 | 0.71 | 0.81 | 0.56 | 0.66 | 0.75 | 0.75 | 0.86 |
| | | PI | 0.40 | 0.40 | 0.40 | 0.40 | 0.41 | 0.43 | 0.43 | 0.43 | 0.43 | 0.43 | 0.45 | 0.45 | 0.45 | 0.45 | 0.46 | 0.48 | 0.48 | 0.48 | 0.48 | 0.48 |
| | 50°F(10.0°C) | TC | 10636 | 10650 | 10662 | 10662 | 10677 | 11277 | 11291 | 11302 | 11304 | 11317 | 11951 | 11966 | 11980 | 11982 | 11995 | 12671 | 12685 | 12699 | 12701 | 12716 |
| | | S/T | 0.48 | 0.56 | 0.63 | 0.63 | 0.72 | 0.50 | 0.59 | 0.67 | 0.67 | 0.77 | 0.53 | 0.63 | 0.71 | 0.71 | 0.81 | 0.57 | 0.67 | 0.76 | 0.76 | 0.86 |
| | | PI | 0.42 | 0.42 | 0.42 | 0.42 | 0.42 | 0.44 | 0.44 | 0.44 | 0.44 | 0.44 | 0.47 | 0.47 | 0.47 | 0.47 | 0.47 | 0.50 | 0.50 | 0.50 | 0.50 | 0.50 |
| | 59°F(15.0°C) | TC | 10772 | 10786 | 10798 | 10798 | 10813 | 11421 | 11434 | 11446 | 11448 | 11462 | 12103 | 12119 | 12132 | 12135 | 12148 | 12832 | 12846 | 12860 | 12862 | 12878 |
| | | S/T | 0.48 | 0.56 | 0.64 | 0.64 | 0.73 | 0.51 | 0.60 | 0.68 | 0.68 | 0.77 | 0.54 | 0.63 | 0.72 | 0.72 | 0.82 | 0.57 | 0.67 | 0.76 | 0.76 | 0.87 |
| | | PI | 0.46 | 0.46 | 0.46 | 0.46 | 0.46 | 0.49 | 0.49 | 0.49 | 0.49 | 0.49 | 0.52 | 0.52 | 0.52 | 0.52 | 0.52 | 0.55 | 0.55 | 0.55 | 0.55 | 0.55 |
| | 68°F(20.0°C) | TC | 10907 | 10922 | 10934 | 10934 | 10949 | 11565 | 11578 | 11590 | 11592 | 11606 | 12256 | 12271 | 12285 | 12287 | 12301 | 12994 | 13008 | 13022 | 13024 | 13041 |
| | | S/T | 0.49 | 0.58 | 0.65 | 0.66 | 0.75 | 0.52 | 0.61 | 0.69 | 0.69 | 0.79 | 0.55 | 0.65 | 0.74 | 0.74 | 0.84 | 0.59 | 0.69 | 0.78 | 0.78 | 0.89 |
| | | PI | 0.50 | 0.50 | 0.51 | 0.51 | 0.51 | 0.53 | 0.53 | 0.54 | 0.54 | 0.54 | 0.57 | 0.57 | 0.57 | 0.57 | 0.57 | 0.60 | 0.60 | 0.60 | 0.60 | 0.60 |
| | 77°F(25.0°C) | TC | 11043 | 11058 | 11070 | 11070 | 11085 | 11708 | 11722 | 11734 | 11736 | 11750 | 12408 | 12424 | 12438 | 12440 | 12454 | 13155 | 13170 | 13184 | 13186 | 13203 |
| | | S/T | 0.50 | 0.58 | 0.66 | 0.66 | 0.76 | 0.53 | 0.62 | 0.70 | 0.70 | 0.80 | 0.56 | 0.66 | 0.75 | 0.75 | 0.85 | 0.59 | 0.70 | 0.79 | 0.79 | 0.90 |
| | | PI | 0.55 | 0.55 | 0.55 | 0.55 | 0.55 | 0.58 | 0.58 | 0.58 | 0.58 | 0.58 | 0.61 | 0.62 | 0.62 | 0.62 | 0.62 | 0.65 | 0.65 | 0.65 | 0.65 | 0.65 |
| | 82°F(27.8°C) | TC | 10985 | 11000 | 11011 | 11012 | 11027 | 11647 | 11661 | 11672 | 11674 | 11688 | 12343 | 12359 | 12372 | 12375 | 12389 | 13086 | 13101 | 13115 | 13117 | 13133 |
| | | S/T | 0.50 | 0.59 | 0.67 | 0.67 | 0.77 | 0.53 | 0.63 | 0.71 | 0.71 | 0.81 | 0.57 | 0.66 | 0.76 | 0.76 | 0.86 | 0.60 | 0.70 | 0.80 | 0.80 | 0.91 |
| | | PI | 0.60 | 0.60 | 0.60 | 0.60 | 0.60 | 0.64 | 0.64 | 0.64 | 0.64 | 0.64 | 0.68 | 0.68 | 0.68 | 0.68 | 0.68 | 0.72 | 0.72 | 0.72 | 0.72 | 0.72 |
| | 86°F(30.0°C) | TC | 10770 | 10785 | 10796 | 10797 | 10811 | 11419 | 11433 | 11444 | 11446 | 11460 | 12101 | 12117 | 12131 | 12133 | 12146 | 12831 | 12844 | 12858 | 12860 | 12876 |
| | | S/T | 0.51 | 0.60 | 0.68 | 0.68 | 0.78 | 0.54 | 0.63 | 0.72 | 0.72 | 0.82 | 0.57 | 0.67 | 0.76 | 0.76 | 0.87 | 0.61 | 0.71 | 0.81 | 0.81 | 0.92 |
| | | PI | 0.68 | 0.68 | 0.69 | 0.69 | 0.69 | 0.72 | 0.73 | 0.73 | 0.73 | 0.73 | 0.77 | 0.77 | 0.77 | 0.77 | 0.77 | 0.81 | 0.82 | 0.82 | 0.82 | 0.82 |
| | 95°F(35.0°C) | TC | 10287 | 10301 | 10312 | 10312 | 10326 | 10907 | 10920 | 10931 | 10933 | 10946 | 11559 | 11574 | 11586 | 11589 | 11602 | 12255 | 12268 | 12282 | 12284 | 12299 |
| | | S/T | 0.51 | 0.60 | 0.68 | 0.68 | 0.78 | 0.54 | 0.63 | 0.72 | 0.72 | 0.82 | 0.57 | 0.67 | 0.76 | 0.76 | 0.87 | 0.61 | 0.71 | 0.81 | 0.81 | 0.92 |
| | | PI | 0.87 | 0.87 | 0.87 | 0.87 | 0.87 | 0.92 | 0.92 | 0.92 | 0.92 | 0.92 | 0.98 | 0.98 | 0.98 | 0.98 | 0.98 | 1.04 | 1.04 | 1.04 | 1.04 | 1.04 |
| | 104°F(40.0°C) | TC | 9341 | 9353 | 9363 | 9364 | 9376 | 9903 | 9915 | 9925 | 9927 | 9939 | 10495 | 10509 | 10521 | 10522 | 10534 | 11128 | 11140 | 11152 | 11153 | 11167 |
| | | S/T | 0.52 | 0.61 | 0.70 | 0.70 | 0.80 | 0.55 | 0.65 | 0.74 | 0.74 | 0.84 | 0.59 | 0.69 | 0.78 | 0.78 | 0.89 | 0.62 | 0.73 | 0.83 | 0.83 | 0.95 |
| | | PI | 0.90 | 0.90 | 0.90 | 0.90 | 0.90 | 0.95 | 0.95 | 0.95 | 0.95 | 0.96 | 1.01 | 1.01 | 1.01 | 1.01 | 1.01 | 1.07 | 1.07 | 1.07 | 1.07 | 1.07 |

Manufacturer reserves the right to change, at any time, specifications and designs without notice and without obligations.

# Table 6: Cooling Performance 115V, 12K (Continued)

| AIRFLOW (CFM) | OUTDOOR DB °F (°C) | ID WB°F (°C) | 60.8°F(16.0°C) | | | | | 64.4°F(18.0°C) | | | | | 67°F(19.4°C) | | | | | 71.6°F(22.0°C) | | | | |
|---|---|---|---|---|---|---|---|---|---|---|---|---|---|---|---|---|---|---|---|---|---|---|
| | | ID DB°F (°C) | 73.4°F (23.0°C) | 77.0°F (25.0°C) | 80.0°F (26.7°C) | 80.6°F (27.0°C) | 84.2°F (29.0°C) | 73.4°F (23.0°C) | 77.0°F (25.0°C) | 80.0°F 26.7°C) | 80.6°F (27.0°C) | 84.2°F (29.0°C) | 73.4°F (23.0°C) | 77.0°F (25.0°C) | 80.0°F (26.7°C) | 80.6°F (27.0°C) | 84.2°F (29.0°C) | 73.4°F (23.0°C) | 77.0°F( 25.0°C) | 80.0°F (26.7°C) | 80.6°F (27.0°C) | 84.2°F (29.0°C) |
| 253 | 110°F(43.0°C) | TC | 8773 | 8785 | 8794 | 8794 | 8806 | 9301 | 9312 | 9322 | 9323 | 9335 | 9857 | 9870 | 9881 | 9883 | 9894 | 10451 | 10462 | 10474 | 10475 | 10488 |
| | | S/T | 0.54 | 0.64 | 0.72 | 0.72 | 0.82 | 0.57 | 0.67 | 0.77 | 0.77 | 0.87 | 0.61 | 0.71 | 0.81 | 0.81 | 0.93 | 0.65 | 0.76 | 0.86 | 0.86 | 0.98 |
| | | PI | 0.91 | 0.92 | 0.92 | 0.92 | 0.92 | 0.97 | 0.97 | 0.97 | 0.97 | 0.97 | 1.03 | 1.03 | 1.03 | 1.03 | 1.03 | 1.09 | 1.09 | 1.09 | 1.09 | 1.09 |
| | 115°F(46.0°C) | TC | 6954 | 6963 | 6971 | 6971 | 6980 | 7373 | 7381 | 7389 | 7390 | 7399 | 7813 | 7823 | 7832 | 7834 | 7842 | 8284 | 8293 | 8302 | 8303 | 8314 |
| | | S/T | 0.55 | 0.64 | 0.73 | 0.73 | 0.83 | 0.58 | 0.68 | 0.78 | 0.78 | 0.88 | 0.62 | 0.72 | 0.82 | 0.82 | 0.94 | 0.65 | 0.77 | 0.87 | 0.87 | 0.99 |
| | | PI | 0.78 | 0.78 | 0.78 | 0.78 | 0.78 | 0.83 | 0.83 | 0.83 | 0.83 | 0.83 | 0.88 | 0.88 | 0.88 | 0.88 | 0.88 | 0.93 | 0.93 | 0.93 | 0.93 | 0.93 |
| | 122°F(50.0°C) | TC | 4528 | 4534 | 4539 | 4539 | 4546 | 4801 | 4807 | 4812 | 4813 | 4818 | 5088 | 5095 | 5100 | 5101 | 5107 | 5395 | 5400 | 5406 | 5407 | 5414 |
| | | S/T | 0.56 | 0.66 | 0.75 | 0.75 | 0.85 | 0.60 | 0.70 | 0.79 | 0.79 | 0.90 | 0.63 | 0.74 | 0.84 | 0.84 | 0.96 | 0.67 | 0.78 | 0.89 | 0.89 | 1.00 |
| | | PI | 0.60 | 0.60 | 0.60 | 0.60 | 0.61 | 0.64 | 0.64 | 0.64 | 0.64 | 0.64 | 0.68 | 0.68 | 0.68 | 0.68 | 0.68 | 0.72 | 0.72 | 0.72 | 0.72 | 0.72 |
| 329 | 5°F(-15.0°C) | TC | 10762 | 10777 | 10788 | 10789 | 10803 | 11411 | 11424 | 11436 | 11438 | 11451 | 12093 | 12108 | 12122 | 12124 | 12138 | 12821 | 12835 | 12849 | 12851 | 12867 |
| | | S/T | 0.47 | 0.56 | 0.63 | 0.63 | 0.72 | 0.50 | 0.59 | 0.67 | 0.67 | 0.77 | 0.53 | 0.63 | 0.71 | 0.71 | 0.81 | 0.57 | 0.66 | 0.75 | 0.75 | 0.86 |
| | | PI | 0.48 | 0.48 | 0.48 | 0.48 | 0.48 | 0.51 | 0.51 | 0.51 | 0.51 | 0.51 | 0.54 | 0.54 | 0.54 | 0.54 | 0.54 | 0.57 | 0.57 | 0.57 | 0.57 | 0.57 |
| | 14°F(-10.0°C) | TC | 11631 | 11646 | 11659 | 11659 | 11675 | 12332 | 12346 | 12358 | 12361 | 12376 | 13068 | 13085 | 13100 | 13102 | 13117 | 13856 | 13871 | 13886 | 13888 | 13905 |
| | | S/T | 0.48 | 0.56 | 0.63 | 0.63 | 0.72 | 0.50 | 0.59 | 0.67 | 0.67 | 0.77 | 0.53 | 0.63 | 0.71 | 0.71 | 0.81 | 0.57 | 0.67 | 0.76 | 0.76 | 0.86 |
| | | PI | 0.47 | 0.47 | 0.47 | 0.47 | 0.47 | 0.50 | 0.50 | 0.50 | 0.50 | 0.50 | 0.53 | 0.53 | 0.53 | 0.53 | 0.53 | 0.56 | 0.56 | 0.56 | 0.56 | 0.56 |
| | 17°F(-8.3°C) | TC | 11920 | 11936 | 11949 | 11950 | 11966 | 12639 | 12654 | 12666 | 12669 | 12684 | 13394 | 13411 | 13426 | 13429 | 13444 | 14201 | 14216 | 14232 | 14234 | 14252 |
| | | S/T | 0.48 | 0.56 | 0.64 | 0.64 | 0.73 | 0.51 | 0.59 | 0.67 | 0.67 | 0.77 | 0.54 | 0.63 | 0.72 | 0.72 | 0.82 | 0.57 | 0.67 | 0.76 | 0.76 | 0.86 |
| | | PI | 0.47 | 0.47 | 0.47 | 0.47 | 0.47 | 0.49 | 0.49 | 0.49 | 0.49 | 0.49 | 0.52 | 0.52 | 0.52 | 0.52 | 0.52 | 0.55 | 0.55 | 0.56 | 0.56 | 0.56 |
| | 23°F(-5.0°C) | TC | 11618 | 11634 | 11646 | 11647 | 11663 | 12318 | 12333 | 12345 | 12348 | 12362 | 13054 | 13071 | 13086 | 13088 | 13103 | 13841 | 13856 | 13871 | 13873 | 13890 |
| | | S/T | 0.48 | 0.56 | 0.64 | 0.64 | 0.73 | 0.51 | 0.60 | 0.68 | 0.68 | 0.77 | 0.54 | 0.63 | 0.72 | 0.72 | 0.82 | 0.57 | 0.67 | 0.76 | 0.76 | 0.87 |
| | | PI | 0.51 | 0.51 | 0.51 | 0.51 | 0.51 | 0.54 | 0.54 | 0.54 | 0.54 | 0.55 | 0.58 | 0.58 | 0.58 | 0.58 | 0.58 | 0.61 | 0.61 | 0.61 | 0.61 | 0.61 |
| | 35°F(1.7°C) | TC | 11014 | 11029 | 11041 | 11041 | 11056 | 11678 | 11692 | 11703 | 11705 | 11719 | 12375 | 12392 | 12405 | 12408 | 12421 | 13121 | 13135 | 13150 | 13152 | 13168 |
| | | S/T | 0.48 | 0.57 | 0.64 | 0.64 | 0.73 | 0.51 | 0.60 | 0.68 | 0.68 | 0.78 | 0.54 | 0.64 | 0.72 | 0.72 | 0.82 | 0.57 | 0.67 | 0.77 | 0.77 | 0.87 |
| | | PI | 0.61 | 0.61 | 0.61 | 0.61 | 0.61 | 0.64 | 0.64 | 0.64 | 0.64 | 0.65 | 0.68 | 0.68 | 0.68 | 0.68 | 0.68 | 0.72 | 0.72 | 0.72 | 0.72 | 0.73 |
| | 41°F(5.0°C) | TC | 10924 | 10938 | 10950 | 10951 | 10965 | 11582 | 11596 | 11607 | 11609 | 11623 | 12274 | 12290 | 12304 | 12306 | 12320 | 13013 | 13028 | 13042 | 13044 | 13060 |
| | | S/T | 0.48 | 0.57 | 0.64 | 0.64 | 0.73 | 0.51 | 0.60 | 0.68 | 0.68 | 0.78 | 0.54 | 0.64 | 0.72 | 0.72 | 0.83 | 0.58 | 0.68 | 0.77 | 0.77 | 0.87 |
| | | PI | 0.51 | 0.51 | 0.51 | 0.51 | 0.51 | 0.54 | 0.54 | 0.54 | 0.54 | 0.54 | 0.57 | 0.57 | 0.57 | 0.57 | 0.57 | 0.61 | 0.61 | 0.61 | 0.61 | 0.61 |
| | 47°F(8.3°C) | TC | 10833 | 10848 | 10860 | 10860 | 10875 | 11486 | 11500 | 11511 | 11513 | 11527 | 12172 | 12188 | 12202 | 12204 | 12218 | 12906 | 12920 | 12934 | 12936 | 12952 |
| | | S/T | 0.48 | 0.57 | 0.65 | 0.65 | 0.74 | 0.51 | 0.60 | 0.68 | 0.68 | 0.78 | 0.54 | 0.64 | 0.73 | 0.73 | 0.83 | 0.58 | 0.68 | 0.77 | 0.77 | 0.88 |
| | | PI | 0.41 | 0.41 | 0.41 | 0.41 | 0.41 | 0.44 | 0.44 | 0.44 | 0.44 | 0.44 | 0.46 | 0.46 | 0.47 | 0.47 | 0.47 | 0.49 | 0.49 | 0.49 | 0.49 | 0.49 |
| | 50°F(10.0°C) | TC | 10880 | 10894 | 10906 | 10906 | 10921 | 11535 | 11549 | 11560 | 11563 | 11576 | 12224 | 12240 | 12254 | 12256 | 12270 | 12961 | 12975 | 12989 | 12991 | 13007 |
| | | S/T | 0.49 | 0.57 | 0.65 | 0.65 | 0.74 | 0.52 | 0.61 | 0.69 | 0.69 | 0.78 | 0.55 | 0.64 | 0.73 | 0.73 | 0.83 | 0.58 | 0.68 | 0.77 | 0.77 | 0.88 |
| | | PI | 0.43 | 0.43 | 0.43 | 0.43 | 0.43 | 0.45 | 0.45 | 0.45 | 0.45 | 0.45 | 0.48 | 0.48 | 0.48 | 0.48 | 0.48 | 0.51 | 0.51 | 0.51 | 0.51 | 0.51 |

Manufacturer reserves the right to change, at any time, specifications and designs without notice and without obligations.

# Table 6: Cooling Performance 115V, 12K (Continued)

| AIRFLOW (CFM) | OUTDOOR DB °F (°C) | ID WB°F (°C) | 60.8°F(16.0°C) | | | | | 64.4°F(18.0°C) | | | | | 67°F(19.4°C) | | | | | 71.6°F(22.0°C) | | | | |
|---|---|---|---|---|---|---|---|---|---|---|---|---|---|---|---|---|---|---|---|---|---|---|
| | | ID DB°F (°C) | 73.4°F (23.0°C) | 77.0°F (25.0°C) | 80.0°F (26.7°C) | 80.6°F (27.0°C) | 84.2°F (29.0°C) | 73.4°F (23.0°C) | 77.0°F (25.0°C) | 80.0°F 26.7°C) | 80.6°F (27.0°C) | 84.2°F (29.0°C) | 73.4°F (23.0°C) | 77.0°F (25.0°C) | 80.0°F (26.7°C) | 80.6°F (27.0°C) | 84.2°F (29.0°C) | 73.4°F (23.0°C) | 77.0°F( 25.0°C) | 80.0°F (26.7°C) | 80.6°F (27.0°C) | 84.2°F (29.0°C) |
| 329 | 59°F(15.0°C) | TC | 11018 | 11033 | 11045 | 11045 | 11060 | 11682 | 11696 | 11708 | 11710 | 11724 | 12380 | 12396 | 12410 | 12412 | 12426 | 13126 | 13140 | 13155 | 13157 | 13173 |
| | | S/T | 0.49 | 0.57 | 0.65 | 0.65 | 0.74 | 0.52 | 0.61 | 0.69 | 0.69 | 0.79 | 0.55 | 0.65 | 0.73 | 0.73 | 0.84 | 0.58 | 0.68 | 0.78 | 0.78 | 0.89 |
| | | PI | 0.47 | 0.47 | 0.47 | 0.47 | 0.47 | 0.50 | 0.50 | 0.50 | 0.50 | 0.50 | 0.53 | 0.53 | 0.53 | 0.53 | 0.53 | 0.56 | 0.56 | 0.56 | 0.56 | 0.56 |
| | 68°F(20.0°C) | TC | 11157 | 11172 | 11184 | 11184 | 11200 | 11829 | 11843 | 11855 | 11857 | 11871 | 12536 | 12552 | 12566 | 12569 | 12583 | 13291 | 13306 | 13320 | 13322 | 13339 |
| | | S/T | 0.50 | 0.59 | 0.67 | 0.67 | 0.76 | 0.53 | 0.62 | 0.71 | 0.71 | 0.81 | 0.56 | 0.66 | 0.75 | 0.75 | 0.86 | 0.60 | 0.70 | 0.80 | 0.80 | 0.91 |
| | | PI | 0.52 | 0.52 | 0.52 | 0.52 | 0.52 | 0.55 | 0.55 | 0.55 | 0.55 | 0.55 | 0.58 | 0.58 | 0.58 | 0.58 | 0.58 | 0.61 | 0.61 | 0.62 | 0.62 | 0.62 |
| | 77°F(25.0°C) | TC | 11296 | 11311 | 11323 | 11323 | 11339 | 11976 | 11991 | 12002 | 12005 | 12019 | 12692 | 12708 | 12722 | 12725 | 12739 | 13457 | 13471 | 13486 | 13488 | 13505 |
| | | S/T | 0.51 | 0.60 | 0.68 | 0.68 | 0.77 | 0.54 | 0.63 | 0.72 | 0.72 | 0.82 | 0.57 | 0.67 | 0.76 | 0.76 | 0.87 | 0.61 | 0.71 | 0.81 | 0.81 | 0.92 |
| | | PI | 0.56 | 0.56 | 0.56 | 0.56 | 0.56 | 0.59 | 0.59 | 0.59 | 0.59 | 0.60 | 0.63 | 0.63 | 0.63 | 0.63 | 0.63 | 0.67 | 0.67 | 0.67 | 0.67 | 0.67 |
| | 82°F(27.8°C) | TC | 11236 | 11251 | 11263 | 11264 | 11279 | 11913 | 11927 | 11939 | 11942 | 11956 | 12625 | 12642 | 12656 | 12658 | 12672 | 13386 | 13400 | 13415 | 13417 | 13434 |
| | | S/T | 0.52 | 0.60 | 0.69 | 0.69 | 0.78 | 0.55 | 0.64 | 0.73 | 0.73 | 0.83 | 0.58 | 0.68 | 0.77 | 0.77 | 0.88 | 0.61 | 0.72 | 0.82 | 0.82 | 0.93 |
| | | PI | 0.62 | 0.62 | 0.62 | 0.62 | 0.62 | 0.65 | 0.65 | 0.65 | 0.65 | 0.65 | 0.69 | 0.69 | 0.69 | 0.69 | 0.69 | 0.73 | 0.73 | 0.73 | 0.73 | 0.74 |
| | 86°F(30.0°C) | TC | 11017 | 11031 | 11043 | 11044 | 11059 | 11680 | 11694 | 11706 | 11708 | 11722 | 12378 | 12394 | 12408 | 12411 | 12424 | 13124 | 13138 | 13153 | 13155 | 13171 |
| | | S/T | 0.52 | 0.61 | 0.70 | 0.70 | 0.79 | 0.55 | 0.65 | 0.74 | 0.74 | 0.84 | 0.59 | 0.69 | 0.78 | 0.78 | 0.89 | 0.62 | 0.73 | 0.83 | 0.83 | 0.95 |
| | | PI | 0.70 | 0.70 | 0.70 | 0.70 | 0.70 | 0.74 | 0.74 | 0.74 | 0.74 | 0.74 | 0.79 | 0.79 | 0.79 | 0.79 | 0.79 | 0.83 | 0.83 | 0.83 | 0.83 | 0.84 |
| | 95°F(35.0°C) | TC | 10522 | 10537 | 10548 | 10548 | 10563 | 11157 | 11170 | 11181 | 11183 | 11196 | 11823 | 11838 | 11852 | 11854 | 11867 | 12535 | 12549 | 12563 | 12565 | 12580 |
| | | S/T | 0.52 | 0.61 | 0.70 | 0.70 | 0.79 | 0.55 | 0.65 | 0.74 | 0.74 | 0.84 | 0.59 | 0.69 | 0.78 | 0.78 | 0.89 | 0.62 | 0.73 | 0.83 | 0.83 | 0.95 |
| | | PI | 0.89 | 0.89 | 0.89 | 0.89 | 0.89 | 0.94 | 0.94 | 0.94 | 0.94 | 0.95 | 1.00 | 1.00 | 1.00 | 1.00 | 1.00 | 1.06 | 1.06 | 1.06 | 1.06 | 1.06 |
| | 104°F(40.0°C) | TC | 9554 | 9567 | 9577 | 9578 | 9591 | 10130 | 10142 | 10152 | 10154 | 10166 | 10735 | 10749 | 10761 | 10763 | 10775 | 11382 | 11395 | 11407 | 11409 | 11423 |
| | | S/T | 0.54 | 0.63 | 0.71 | 0.71 | 0.81 | 0.57 | 0.67 | 0.76 | 0.76 | 0.86 | 0.60 | 0.71 | 0.80 | 0.80 | 0.91 | 0.64 | 0.75 | 0.85 | 0.85 | 0.97 |
| | | PI | 0.92 | 0.92 | 0.92 | 0.92 | 0.92 | 0.97 | 0.97 | 0.98 | 0.98 | 0.98 | 1.03 | 1.03 | 1.03 | 1.03 | 1.04 | 1.09 | 1.10 | 1.10 | 1.10 | 1.10 |
| | 110°F(43.0°C) | TC | 8974 | 8986 | 8995 | 8996 | 9008 | 9514 | 9526 | 9535 | 9537 | 9548 | 10083 | 10096 | 10107 | 10109 | 10120 | 10690 | 10702 | 10713 | 10715 | 10728 |
| | | S/T | 0.55 | 0.65 | 0.74 | 0.74 | 0.84 | 0.59 | 0.69 | 0.78 | 0.78 | 0.89 | 0.62 | 0.73 | 0.83 | 0.83 | 0.95 | 0.66 | 0.78 | 0.88 | 0.88 | 1.00 |
| | | PI | 0.94 | 0.94 | 0.94 | 0.94 | 0.94 | 0.99 | 0.99 | 0.99 | 0.99 | 1.00 | 1.05 | 1.05 | 1.05 | 1.05 | 1.06 | 1.11 | 1.12 | 1.12 | 1.12 | 1.12 |
| | 115°F(46.0°C) | TC | 7113 | 7122 | 7130 | 7130 | 7140 | 7541 | 7550 | 7558 | 7559 | 7568 | 7992 | 8002 | 8011 | 8013 | 8022 | 8474 | 8483 | 8492 | 8493 | 8504 |
| | | S/T | 0.56 | 0.66 | 0.75 | 0.75 | 0.85 | 0.59 | 0.70 | 0.79 | 0.79 | 0.90 | 0.63 | 0.74 | 0.84 | 0.84 | 0.96 | 0.67 | 0.78 | 0.89 | 0.89 | 1.00 |
| | | PI | 0.80 | 0.80 | 0.80 | 0.80 | 0.80 | 0.85 | 0.85 | 0.85 | 0.85 | 0.85 | 0.90 | 0.90 | 0.90 | 0.90 | 0.90 | 0.95 | 0.95 | 0.95 | 0.95 | 0.96 |
| | 122°F(50.0°C) | TC | 4632 | 4638 | 4643 | 4643 | 4650 | 4911 | 4917 | 4922 | 4923 | 4928 | 5204 | 5211 | 5217 | 5218 | 5224 | 5518 | 5524 | 5530 | 5531 | 5538 |
| | | S/T | 0.57 | 0.67 | 0.77 | 0.77 | 0.87 | 0.61 | 0.71 | 0.81 | 0.81 | 0.93 | 0.65 | 0.76 | 0.86 | 0.86 | 0.98 | 0.68 | 0.80 | 0.91 | 0.91 | 1.00 |
| | | PI | 0.62 | 0.62 | 0.62 | 0.62 | 0.62 | 0.65 | 0.66 | 0.66 | 0.66 | 0.66 | 0.69 | 0.69 | 0.70 | 0.70 | 0.70 | 0.74 | 0.74 | 0.74 | 0.74 | 0.74 |
| 347 | 5°F(-15.0°C) | TC | 11009 | 11023 | 11035 | 11036 | 11051 | 11672 | 11686 | 11697 | 11700 | 11714 | 12369 | 12385 | 12399 | 12402 | 12415 | 13115 | 13129 | 13143 | 13145 | 13162 |
| | | S/T | 0.49 | 0.57 | 0.65 | 0.65 | 0.74 | 0.51 | 0.60 | 0.69 | 0.69 | 0.78 | 0.55 | 0.64 | 0.73 | 0.73 | 0.83 | 0.58 | 0.68 | 0.77 | 0.77 | 0.88 |
| | | PI | 0.49 | 0.49 | 0.49 | 0.49 | 0.49 | 0.52 | 0.52 | 0.52 | 0.52 | 0.52 | 0.55 | 0.55 | 0.55 | 0.55 | 0.55 | 0.58 | 0.58 | 0.58 | 0.58 | 0.58 |

Manufacturer reserves the right to change, at any time, specifications and designs without notice and without obligations.

# Table 6: Cooling Performance 115V, 12K (Continued)

| AIRFLOW (CFM) | OUTDOOR DB °F (°C) | ID WB°F (°C) | 60.8°F(16.0°C) | | | | | 64.4°F(18.0°C) | | | | | 67°F(19.4°C) | | | | | 71.6°F(22.0°C) | | | | |
|---|---|---|---|---|---|---|---|---|---|---|---|---|---|---|---|---|---|---|---|---|---|---|
| | | ID DB°F (°C) | 73.4°F (23.0°C) | 77.0°F (25.0°C) | 80.0°F (26.7°C) | 80.6°F (27.0°C) | 84.2°F (29.0°C) | 73.4°F (23.0°C) | 77.0°F (25.0°C) | 80.0°F 26.7°C) | 80.6°F (27.0°C) | 84.2°F (29.0°C) | 73.4°F (23.0°C) | 77.0°F (25.0°C) | 80.0°F (26.7°C) | 80.6°F (27.0°C) | 84.2°F (29.0°C) | 73.4°F (23.0°C) | 77.0°F( 25.0°C) | 80.0°F (26.7°C) | 80.6°F (27.0°C) | 84.2°F (29.0°C) |
| 347 | 14°F(-10.0°C) | TC | 11897 | 11913 | 11926 | 11926 | 11942 | 12614 | 12629 | 12641 | 12644 | 12659 | 13367 | 13385 | 13400 | 13402 | 13417 | 14173 | 14188 | 14204 | 14206 | 14224 |
| | | S/T | 0.49 | 0.57 | 0.65 | 0.65 | 0.74 | 0.52 | 0.61 | 0.69 | 0.69 | 0.78 | 0.55 | 0.64 | 0.73 | 0.73 | 0.83 | 0.58 | 0.68 | 0.77 | 0.77 | 0.88 |
| | | PI | 0.48 | 0.48 | 0.48 | 0.48 | 0.48 | 0.51 | 0.51 | 0.51 | 0.51 | 0.51 | 0.54 | 0.54 | 0.54 | 0.54 | 0.54 | 0.57 | 0.57 | 0.57 | 0.57 | 0.57 |
| | 17°F(-8.3°C) | TC | 12193 | 12209 | 12223 | 12223 | 12240 | 12928 | 12943 | 12956 | 12959 | 12974 | 13700 | 13718 | 13733 | 13736 | 13751 | 14526 | 14541 | 14557 | 14560 | 14578 |
| | | S/T | 0.49 | 0.57 | 0.65 | 0.65 | 0.74 | 0.52 | 0.61 | 0.69 | 0.69 | 0.79 | 0.55 | 0.64 | 0.73 | 0.73 | 0.83 | 0.58 | 0.68 | 0.78 | 0.78 | 0.88 |
| | | PI | 0.48 | 0.48 | 0.48 | 0.48 | 0.48 | 0.50 | 0.51 | 0.51 | 0.51 | 0.51 | 0.53 | 0.54 | 0.54 | 0.54 | 0.54 | 0.57 | 0.57 | 0.57 | 0.57 | 0.57 |
| | 23°F(-5.0°C) | TC | 11884 | 11900 | 11913 | 11913 | 11929 | 12600 | 12615 | 12628 | 12630 | 12645 | 13353 | 13370 | 13385 | 13388 | 13403 | 14158 | 14173 | 14188 | 14191 | 14208 |
| | | S/T | 0.49 | 0.58 | 0.65 | 0.65 | 0.75 | 0.52 | 0.61 | 0.69 | 0.69 | 0.79 | 0.55 | 0.65 | 0.74 | 0.74 | 0.84 | 0.58 | 0.69 | 0.78 | 0.78 | 0.89 |
| | | PI | 0.52 | 0.52 | 0.53 | 0.53 | 0.53 | 0.56 | 0.56 | 0.56 | 0.56 | 0.56 | 0.59 | 0.59 | 0.59 | 0.59 | 0.59 | 0.62 | 0.63 | 0.63 | 0.63 | 0.63 |
| | 35°F(1.7°C) | TC | 11266 | 11281 | 11293 | 11294 | 11309 | 11945 | 11959 | 11971 | 11973 | 11988 | 12659 | 12675 | 12689 | 12692 | 12706 | 13421 | 13436 | 13451 | 13453 | 13469 |
| | | S/T | 0.49 | 0.58 | 0.66 | 0.66 | 0.75 | 0.52 | 0.61 | 0.70 | 0.70 | 0.79 | 0.55 | 0.65 | 0.74 | 0.74 | 0.84 | 0.59 | 0.69 | 0.78 | 0.78 | 0.89 |
| | | PI | 0.62 | 0.62 | 0.62 | 0.62 | 0.62 | 0.66 | 0.66 | 0.66 | 0.66 | 0.66 | 0.70 | 0.70 | 0.70 | 0.70 | 0.70 | 0.74 | 0.74 | 0.74 | 0.74 | 0.74 |
| | 41°F(5.0°C) | TC | 11174 | 11189 | 11201 | 11201 | 11216 | 11847 | 11861 | 11873 | 11875 | 11889 | 12555 | 12571 | 12585 | 12588 | 12602 | 13311 | 13326 | 13340 | 13342 | 13359 |
| | | S/T | 0.49 | 0.58 | 0.66 | 0.66 | 0.75 | 0.52 | 0.61 | 0.70 | 0.70 | 0.80 | 0.56 | 0.65 | 0.74 | 0.74 | 0.84 | 0.59 | 0.69 | 0.78 | 0.78 | 0.89 |
| | | PI | 0.52 | 0.52 | 0.52 | 0.52 | 0.52 | 0.55 | 0.55 | 0.55 | 0.55 | 0.55 | 0.59 | 0.59 | 0.59 | 0.59 | 0.59 | 0.62 | 0.62 | 0.62 | 0.62 | 0.62 |
| | 47°F(8.3°C) | TC | 11081 | 11096 | 11108 | 11109 | 11124 | 11749 | 11763 | 11775 | 11777 | 11791 | 12451 | 12467 | 12481 | 12483 | 12497 | 13201 | 13216 | 13230 | 13232 | 13248 |
| | | S/T | 0.50 | 0.58 | 0.66 | 0.66 | 0.75 | 0.53 | 0.62 | 0.70 | 0.70 | 0.80 | 0.56 | 0.65 | 0.74 | 0.74 | 0.85 | 0.59 | 0.69 | 0.79 | 0.79 | 0.90 |
| | | PI | 0.42 | 0.42 | 0.42 | 0.42 | 0.42 | 0.45 | 0.45 | 0.45 | 0.45 | 0.45 | 0.47 | 0.48 | 0.48 | 0.48 | 0.48 | 0.50 | 0.50 | 0.50 | 0.50 | 0.50 |
| | 50°F(10.0°C) | TC | 11129 | 11144 | 11156 | 11156 | 11171 | 11799 | 11813 | 11825 | 11827 | 11841 | 12504 | 12520 | 12534 | 12537 | 12551 | 13258 | 13272 | 13286 | 13288 | 13305 |
| | | S/T | 0.50 | 0.58 | 0.66 | 0.66 | 0.76 | 0.53 | 0.62 | 0.70 | 0.70 | 0.80 | 0.56 | 0.66 | 0.75 | 0.75 | 0.85 | 0.59 | 0.70 | 0.79 | 0.79 | 0.90 |
| | | PI | 0.44 | 0.44 | 0.44 | 0.44 | 0.44 | 0.46 | 0.46 | 0.46 | 0.46 | 0.47 | 0.49 | 0.49 | 0.49 | 0.49 | 0.49 | 0.52 | 0.52 | 0.52 | 0.52 | 0.52 |
| | 59°F(15.0°C) | TC | 11270 | 11286 | 11298 | 11298 | 11313 | 11950 | 11964 | 11976 | 11978 | 11992 | 12664 | 12680 | 12694 | 12696 | 12711 | 13427 | 13441 | 13456 | 13458 | 13475 |
| | | S/T | 0.50 | 0.59 | 0.67 | 0.67 | 0.76 | 0.53 | 0.62 | 0.71 | 0.71 | 0.81 | 0.56 | 0.66 | 0.75 | 0.75 | 0.86 | 0.60 | 0.70 | 0.80 | 0.80 | 0.91 |
| | | PI | 0.48 | 0.48 | 0.48 | 0.48 | 0.48 | 0.51 | 0.51 | 0.51 | 0.51 | 0.51 | 0.54 | 0.54 | 0.54 | 0.54 | 0.54 | 0.57 | 0.58 | 0.58 | 0.58 | 0.58 |
| | 68°F(20.0°C) | TC | 11412 | 11428 | 11440 | 11440 | 11456 | 12100 | 12114 | 12126 | 12129 | 12143 | 12823 | 12840 | 12854 | 12856 | 12871 | 13596 | 13610 | 13625 | 13627 | 13644 |
| | | S/T | 0.51 | 0.60 | 0.69 | 0.69 | 0.78 | 0.54 | 0.64 | 0.73 | 0.73 | 0.83 | 0.58 | 0.68 | 0.77 | 0.77 | 0.88 | 0.61 | 0.72 | 0.82 | 0.82 | 0.93 |
| | | PI | 0.53 | 0.53 | 0.53 | 0.53 | 0.53 | 0.56 | 0.56 | 0.56 | 0.56 | 0.56 | 0.59 | 0.59 | 0.59 | 0.59 | 0.59 | 0.63 | 0.63 | 0.63 | 0.63 | 0.63 |
| | 77°F(25.0°C) | TC | 11554 | 11570 | 11582 | 11583 | 11598 | 12250 | 12265 | 12277 | 12279 | 12294 | 12982 | 12999 | 13014 | 13016 | 13031 | 13764 | 13779 | 13794 | 13797 | 13814 |
| | | S/T | 0.52 | 0.61 | 0.69 | 0.69 | 0.79 | 0.55 | 0.65 | 0.74 | 0.74 | 0.84 | 0.59 | 0.69 | 0.78 | 0.78 | 0.89 | 0.62 | 0.73 | 0.83 | 0.83 | 0.94 |
| | | PI | 0.57 | 0.57 | 0.57 | 0.57 | 0.57 | 0.61 | 0.61 | 0.61 | 0.61 | 0.61 | 0.64 | 0.64 | 0.64 | 0.64 | 0.65 | 0.68 | 0.68 | 0.68 | 0.68 | 0.68 |
| | 82°F(27.8°C) | TC | 11493 | 11509 | 11521 | 11522 | 11537 | 12186 | 12200 | 12212 | 12215 | 12229 | 12914 | 12931 | 12945 | 12948 | 12962 | 13692 | 13707 | 13722 | 13724 | 13741 |
| | | S/T | 0.53 | 0.62 | 0.70 | 0.70 | 0.80 | 0.56 | 0.66 | 0.75 | 0.75 | 0.85 | 0.59 | 0.70 | 0.79 | 0.79 | 0.90 | 0.63 | 0.74 | 0.84 | 0.84 | 0.95 |
| | | PI | 0.63 | 0.63 | 0.63 | 0.63 | 0.63 | 0.67 | 0.67 | 0.67 | 0.67 | 0.67 | 0.71 | 0.71 | 0.71 | 0.71 | 0.71 | 0.75 | 0.75 | 0.75 | 0.75 | 0.75 |

Manufacturer reserves the right to change, at any time, specifications and designs without notice and without obligations.

# Table 6: Cooling Performance 115V, 12K (Continued)

| AIRFLOW (CFM) | OUTDOOR DB °F (℃) | ID WB°F (℃) | 60.8°F(16.0℃) | | | | | 64.4°F(18.0℃) | | | | | 67°F(19.4℃) | | | | | 71.6°F(22.0℃) | | | | |
|---|---|---|---|---|---|---|---|---|---|---|---|---|---|---|---|---|---|---|---|---|---|---|
| | | ID DB°F (℃) | 73.4°F (23.0℃) | 77.0°F (25.0℃) | 80.0°F (26.7℃) | 80.6°F (27.0℃) | 84.2°F (29.0℃) | 73.4°F (23.0℃) | 77.0°F (25.0℃) | 80.0°F 26.7℃) | 80.6°F (27.0℃) | 84.2°F (29.0℃) | 73.4°F (23.0℃) | 77.0°F (25.0℃) | 80.0°F (26.7℃) | 80.6°F (27.0℃) | 84.2°F (29.0℃) | 73.4°F (23.0℃) | 77.0°F( 25.0℃) | 80.0°F (26.7℃) | 80.6°F (27.0℃) | 84.2°F (29.0℃) |
| 347 | 86°F(30.0℃) | TC | 11269 | 11284 | 11296 | 11297 | 11312 | 11948 | 11962 | 11974 | 11976 | 11990 | 12662 | 12678 | 12692 | 12695 | 12709 | 13424 | 13439 | 13454 | 13456 | 13473 |
| | | S/T | 0.53 | 0.63 | 0.71 | 0.71 | 0.81 | 0.57 | 0.66 | 0.75 | 0.75 | 0.86 | 0.60 | 0.70 | 0.80 | 0.80 | 0.91 | 0.64 | 0.75 | 0.85 | 0.85 | 0.97 |
| | | PI | 0.72 | 0.72 | 0.72 | 0.72 | 0.72 | 0.76 | 0.76 | 0.76 | 0.76 | 0.76 | 0.80 | 0.80 | 0.81 | 0.81 | 0.81 | 0.85 | 0.85 | 0.85 | 0.85 | 0.86 |
| | 95°F(35.0℃) | TC | 10763 | 10778 | 10789 | 10790 | 10804 | 11412 | 11425 | 11437 | 11439 | 11452 | 12094 | 12109 | 12123 | 12125 | 12139 | 12822 | 12836 | 12850 | 12852 | 12868 |
| | | S/T | 0.53 | 0.63 | 0.71 | 0.71 | 0.81 | 0.57 | 0.66 | 0.75 | 0.75 | 0.86 | 0.60 | 0.70 | 0.80 | 0.80 | 0.91 | 0.64 | 0.75 | 0.85 | 0.85 | 0.97 |
| | | PI | 0.91 | 0.91 | 0.91 | 0.91 | 0.91 | 0.96 | 0.97 | 0.97 | 0.97 | 0.97 | 1.02 | 1.02 | 1.02 | 1.02 | 1.03 | 1.08 | 1.08 | 1.09 | 1.09 | 1.09 |
| | 104°F(40.0℃) | TC | 9773 | 9786 | 9797 | 9797 | 9810 | 10362 | 10374 | 10384 | 10387 | 10399 | 10981 | 10995 | 11008 | 11010 | 11022 | 11643 | 11655 | 11668 | 11670 | 11684 |
| | | S/T | 0.55 | 0.64 | 0.73 | 0.73 | 0.83 | 0.58 | 0.68 | 0.77 | 0.77 | 0.88 | 0.62 | 0.72 | 0.82 | 0.82 | 0.93 | 0.65 | 0.76 | 0.87 | 0.87 | 0.99 |
| | | PI | 0.94 | 0.94 | 0.94 | 0.94 | 0.94 | 1.00 | 1.00 | 1.00 | 1.00 | 1.00 | 1.06 | 1.06 | 1.06 | 1.06 | 1.06 | 1.12 | 1.12 | 1.12 | 1.12 | 1.12 |
| | 110°F(43.0℃) | TC | 9179 | 9191 | 9201 | 9202 | 9214 | 9732 | 9744 | 9753 | 9755 | 9767 | 10313 | 10327 | 10338 | 10340 | 10352 | 10935 | 10947 | 10959 | 10960 | 10974 |
| | | S/T | 0.57 | 0.67 | 0.76 | 0.76 | 0.86 | 0.60 | 0.71 | 0.80 | 0.80 | 0.91 | 0.64 | 0.75 | 0.85 | 0.85 | 0.97 | 0.68 | 0.79 | 0.90 | 0.90 | 1.00 |
| | | PI | 0.96 | 0.96 | 0.96 | 0.96 | 0.96 | 1.02 | 1.02 | 1.02 | 1.02 | 1.02 | 1.08 | 1.08 | 1.08 | 1.08 | 1.08 | 1.14 | 1.14 | 1.14 | 1.14 | 1.14 |
| | 115°F(46.0℃) | TC | 7276 | 7285 | 7293 | 7294 | 7303 | 7714 | 7723 | 7731 | 7732 | 7742 | 8175 | 8186 | 8195 | 8196 | 8205 | 8667 | 8677 | 8686 | 8688 | 8698 |
| | | S/T | 0.57 | 0.67 | 0.77 | 0.77 | 0.87 | 0.61 | 0.71 | 0.81 | 0.81 | 0.92 | 0.65 | 0.76 | 0.86 | 0.86 | 0.98 | 0.68 | 0.80 | 0.91 | 0.91 | 1.00 |
| | | PI | 0.82 | 0.82 | 0.82 | 0.82 | 0.82 | 0.87 | 0.87 | 0.87 | 0.87 | 0.87 | 0.92 | 0.92 | 0.92 | 0.92 | 0.92 | 0.97 | 0.98 | 0.98 | 0.98 | 0.98 |
| | 122°F(50.0℃) | TC | 4738 | 4744 | 4749 | 4750 | 4756 | 5023 | 5029 | 5034 | 5035 | 5041 | 5324 | 5330 | 5336 | 5337 | 5343 | 5644 | 5650 | 5657 | 5657 | 5664 |
| | | S/T | 0.59 | 0.69 | 0.78 | 0.78 | 0.89 | 0.62 | 0.73 | 0.83 | 0.83 | 0.95 | 0.66 | 0.77 | 0.88 | 0.88 | 1.00 | 0.70 | 0.82 | 0.93 | 0.93 | 1.00 |
| | | PI | 0.63 | 0.63 | 0.63 | 0.63 | 0.63 | 0.67 | 0.67 | 0.67 | 0.67 | 0.67 | 0.71 | 0.71 | 0.71 | 0.71 | 0.71 | 0.75 | 0.75 | 0.75 | 0.75 | 0.75 |

## LEGEND

TC: Total Cooling Capacity (BTU/hr)
S/T: Sensible Cooling Capacity Ratio
PI: Power Input (kW)

Manufacturer reserves the right to change, at any time, specifications and designs without notice and without obligations.

# Table 7: Cooling Performance 9K

| AIRFLOW (CFM) | OUTDOOR DB°F (℃) | ID WB°F (℃) | 60.8°F(16.0℃) | | | | | 64.4°F(18.0℃) | | | | | 67°F(19.4℃) | | | | | 71.6°F(22.0℃) | | | | |
|---|---|---|---|---|---|---|---|---|---|---|---|---|---|---|---|---|---|---|---|---|---|---|
| | | ID DB°F (℃) | 73.4°F (23.0℃) | 77.0°F (25.0℃) | 80.0°F (26.7℃) | 80.6°F (27.0℃) | 84.2°F (29.0℃) | 73.4°F (23.0℃) | 77.0°F (25.0℃) | 80.0°F 26.7℃) | 80.6°F (27.0℃) | 84.2°F (29.0℃) | 73.4°F (23.0℃) | 77.0°F (25.0℃) | 80.0°F (26.7℃) | 80.6°F (27.0℃) | 84.2°F (29.0℃) | 73.4°F (23.0℃) | 77.0°F( 25.0℃) | 80.0°F (26.7℃) | 80.6°F (27.0℃) | 84.2°F (29.0℃) |
| 141 | 5°F(-15.0℃) | TC | 6308 | 6316 | 6323 | 6323 | 6332 | 6688 | 6696 | 6702 | 6704 | 6712 | 7087 | 7096 | 7104 | 7106 | 7114 | 7514 | 7522 | 7531 | 7532 | 7541 |
| | | S/T | 0.26 | 0.31 | 0.35 | 0.35 | 0.40 | 0.28 | 0.33 | 0.37 | 0.37 | 0.43 | 0.30 | 0.35 | 0.40 | 0.40 | 0.45 | 0.31 | 0.37 | 0.42 | 0.42 | 0.48 |
| | | PI | 0.31 | 0.31 | 0.31 | 0.31 | 0.31 | 0.33 | 0.33 | 0.33 | 0.33 | 0.33 | 0.35 | 0.35 | 0.35 | 0.35 | 0.35 | 0.37 | 0.37 | 0.37 | 0.37 | 0.37 |
| | 14°F(-10.0℃) | TC | 6259 | 6268 | 6275 | 6275 | 6283 | 6637 | 6644 | 6651 | 6652 | 6660 | 7033 | 7042 | 7050 | 7051 | 7059 | 7457 | 7465 | 7473 | 7474 | 7484 |
| | | S/T | 0.26 | 0.31 | 0.35 | 0.35 | 0.40 | 0.28 | 0.33 | 0.37 | 0.37 | 0.43 | 0.30 | 0.35 | 0.40 | 0.40 | 0.45 | 0.32 | 0.37 | 0.42 | 0.42 | 0.48 |
| | | PI | 0.32 | 0.32 | 0.32 | 0.32 | 0.32 | 0.34 | 0.34 | 0.34 | 0.34 | 0.34 | 0.36 | 0.36 | 0.36 | 0.36 | 0.36 | 0.38 | 0.38 | 0.38 | 0.38 | 0.38 |
| | 17°F(-8.3℃) | TC | 6243 | 6252 | 6258 | 6259 | 6267 | 6620 | 6627 | 6634 | 6635 | 6643 | 7015 | 7024 | 7032 | 7033 | 7041 | 7438 | 7446 | 7454 | 7455 | 7464 |
| | | S/T | 0.27 | 0.31 | 0.35 | 0.35 | 0.40 | 0.28 | 0.33 | 0.38 | 0.38 | 0.43 | 0.30 | 0.35 | 0.40 | 0.40 | 0.45 | 0.32 | 0.37 | 0.42 | 0.42 | 0.48 |
| | | PI | 0.32 | 0.32 | 0.32 | 0.32 | 0.32 | 0.34 | 0.34 | 0.34 | 0.34 | 0.34 | 0.36 | 0.36 | 0.36 | 0.36 | 0.36 | 0.38 | 0.38 | 0.38 | 0.38 | 0.38 |
| | 23°F(-5.0℃) | TC | 6163 | 6171 | 6178 | 6178 | 6186 | 6534 | 6542 | 6548 | 6550 | 6557 | 6924 | 6933 | 6941 | 6942 | 6950 | 7342 | 7350 | 7358 | 7359 | 7368 |
| | | S/T | 0.27 | 0.31 | 0.36 | 0.36 | 0.41 | 0.28 | 0.33 | 0.38 | 0.38 | 0.43 | 0.30 | 0.35 | 0.40 | 0.40 | 0.46 | 0.32 | 0.37 | 0.42 | 0.42 | 0.48 |
| | | PI | 0.33 | 0.33 | 0.33 | 0.33 | 0.33 | 0.35 | 0.35 | 0.35 | 0.35 | 0.35 | 0.37 | 0.37 | 0.37 | 0.37 | 0.37 | 0.39 | 0.39 | 0.39 | 0.39 | 0.39 |
| | 35°F(1.7℃) | TC | 6001 | 6009 | 6016 | 6016 | 6024 | 6363 | 6370 | 6377 | 6378 | 6386 | 6743 | 6752 | 6759 | 6761 | 6768 | 7149 | 7157 | 7165 | 7166 | 7175 |
| | | S/T | 0.27 | 0.31 | 0.36 | 0.36 | 0.41 | 0.28 | 0.33 | 0.38 | 0.38 | 0.43 | 0.30 | 0.35 | 0.40 | 0.40 | 0.46 | 0.32 | 0.37 | 0.43 | 0.43 | 0.49 |
| | | PI | 0.35 | 0.35 | 0.35 | 0.35 | 0.35 | 0.37 | 0.37 | 0.37 | 0.37 | 0.37 | 0.39 | 0.39 | 0.39 | 0.39 | 0.39 | 0.41 | 0.42 | 0.42 | 0.42 | 0.42 |
| | 41°F(5.0℃) | TC | 5791 | 5799 | 5805 | 5805 | 5813 | 6140 | 6147 | 6153 | 6154 | 6162 | 6507 | 6515 | 6522 | 6524 | 6531 | 6899 | 6906 | 6914 | 6915 | 6923 |
| | | S/T | 0.27 | 0.32 | 0.36 | 0.36 | 0.41 | 0.28 | 0.33 | 0.38 | 0.38 | 0.43 | 0.30 | 0.35 | 0.40 | 0.40 | 0.46 | 0.32 | 0.38 | 0.43 | 0.43 | 0.49 |
| | | PI | 0.29 | 0.29 | 0.29 | 0.29 | 0.29 | 0.30 | 0.30 | 0.30 | 0.30 | 0.30 | 0.32 | 0.32 | 0.32 | 0.32 | 0.32 | 0.34 | 0.34 | 0.34 | 0.34 | 0.34 |
| | 47°F(8.3℃) | TC | 5581 | 5588 | 5594 | 5594 | 5602 | 5917 | 5924 | 5930 | 5931 | 5938 | 6270 | 6279 | 6286 | 6287 | 6294 | 6648 | 6655 | 6663 | 6664 | 6672 |
| | | S/T | 0.27 | 0.32 | 0.36 | 0.36 | 0.41 | 0.29 | 0.34 | 0.38 | 0.38 | 0.43 | 0.30 | 0.36 | 0.40 | 0.40 | 0.46 | 0.32 | 0.38 | 0.43 | 0.43 | 0.49 |
| | | PI | 0.22 | 0.22 | 0.22 | 0.22 | 0.22 | 0.24 | 0.24 | 0.24 | 0.24 | 0.24 | 0.25 | 0.25 | 0.25 | 0.25 | 0.25 | 0.27 | 0.27 | 0.27 | 0.27 | 0.27 |
| | 50°F(10.0℃) | TC | 5610 | 5617 | 5623 | 5624 | 5631 | 5948 | 5955 | 5961 | 5962 | 5969 | 6303 | 6311 | 6318 | 6319 | 6327 | 6683 | 6690 | 6697 | 6698 | 6707 |
| | | S/T | 0.27 | 0.32 | 0.36 | 0.36 | 0.41 | 0.29 | 0.34 | 0.38 | 0.38 | 0.44 | 0.30 | 0.36 | 0.41 | 0.41 | 0.46 | 0.32 | 0.38 | 0.43 | 0.43 | 0.49 |
| | | PI | 0.23 | 0.23 | 0.23 | 0.23 | 0.23 | 0.25 | 0.25 | 0.25 | 0.25 | 0.25 | 0.26 | 0.26 | 0.26 | 0.26 | 0.26 | 0.28 | 0.28 | 0.28 | 0.28 | 0.28 |
| | 59°F(15.0℃) | TC | 5697 | 5704 | 5711 | 5711 | 5719 | 6040 | 6047 | 6053 | 6054 | 6062 | 6401 | 6409 | 6416 | 6418 | 6425 | 6787 | 6794 | 6801 | 6802 | 6811 |
| | | S/T | 0.27 | 0.32 | 0.36 | 0.36 | 0.41 | 0.29 | 0.34 | 0.38 | 0.38 | 0.44 | 0.31 | 0.36 | 0.41 | 0.41 | 0.46 | 0.32 | 0.38 | 0.43 | 0.43 | 0.49 |
| | | PI | 0.26 | 0.26 | 0.26 | 0.26 | 0.26 | 0.27 | 0.27 | 0.28 | 0.28 | 0.28 | 0.29 | 0.29 | 0.29 | 0.29 | 0.29 | 0.31 | 0.31 | 0.31 | 0.31 | 0.31 |
| | 68°F(20.0℃) | TC | 5784 | 5792 | 5798 | 5798 | 5806 | 6133 | 6140 | 6146 | 6147 | 6154 | 6499 | 6507 | 6515 | 6516 | 6523 | 6890 | 6898 | 6905 | 6907 | 6915 |
| | | S/T | 0.28 | 0.33 | 0.37 | 0.37 | 0.42 | 0.30 | 0.35 | 0.40 | 0.40 | 0.45 | 0.31 | 0.37 | 0.42 | 0.42 | 0.48 | 0.33 | 0.39 | 0.44 | 0.44 | 0.51 |
| | | PI | 0.29 | 0.29 | 0.29 | 0.29 | 0.29 | 0.30 | 0.30 | 0.30 | 0.30 | 0.30 | 0.32 | 0.32 | 0.32 | 0.32 | 0.32 | 0.34 | 0.34 | 0.34 | 0.34 | 0.34 |
| | 77°F(25.0℃) | TC | 5871 | 5879 | 5885 | 5886 | 5894 | 6225 | 6232 | 6238 | 6240 | 6247 | 6597 | 6605 | 6613 | 6614 | 6621 | 6994 | 7002 | 7009 | 7011 | 7019 |
| | | S/T | 0.28 | 0.33 | 0.38 | 0.38 | 0.43 | 0.30 | 0.35 | 0.40 | 0.40 | 0.46 | 0.32 | 0.37 | 0.42 | 0.42 | 0.48 | 0.34 | 0.40 | 0.45 | 0.45 | 0.51 |
| | | PI | 0.31 | 0.31 | 0.31 | 0.31 | 0.31 | 0.33 | 0.33 | 0.33 | 0.33 | 0.33 | 0.35 | 0.35 | 0.35 | 0.35 | 0.35 | 0.37 | 0.37 | 0.37 | 0.37 | 0.38 |

Manufacturer reserves the right to change, at any time, specifications and designs without notice and without obligations.

# Table 7: Cooling Performance 9K (Continued)

| AIRFLOW (CFM) | OUTDOOR DB°F (°C) | ID WB°F (°C) | 60.8°F(16.0°C) | | | | | 64.4°F(18.0°C) | | | | | 67°F(19.4°C) | | | | | 71.6°F(22.0°C) | | | | |
|---|---|---|---|---|---|---|---|---|---|---|---|---|---|---|---|---|---|---|---|---|---|---|
| | | ID DB°F (°C) | 73.4°F (23.0°C) | 77.0°F (25.0°C) | 80.0°F (26.7°C) | 80.6°F (27.0°C) | 84.2°F (29.0°C) | 73.4°F (23.0°C) | 77.0°F (25.0°C) | 80.0°F 26.7°C) | 80.6°F (27.0°C) | 84.2°F (29.0°C) | 73.4°F (23.0°C) | 77.0°F (25.0°C) | 80.0°F (26.7°C) | 80.6°F (27.0°C) | 84.2°F (29.0°C) | 73.4°F (23.0°C) | 77.0°F( 25.0°C) | 80.0°F (26.7°C) | 80.6°F (27.0°C) | 84.2°F (29.0°C) |
| 141 | 82°F(27.8°C) | TC | 5836 | 5844 | 5850 | 5850 | 5858 | 6188 | 6195 | 6201 | 6202 | 6210 | 6557 | 6566 | 6573 | 6574 | 6582 | 6952 | 6960 | 6967 | 6969 | 6977 |
| | | S/T | 0.29 | 0.34 | 0.38 | 0.38 | 0.44 | 0.30 | 0.36 | 0.41 | 0.41 | 0.46 | 0.32 | 0.38 | 0.43 | 0.43 | 0.49 | 0.34 | 0.40 | 0.46 | 0.46 | 0.52 |
| | | PI | 0.35 | 0.35 | 0.35 | 0.35 | 0.35 | 0.37 | 0.37 | 0.37 | 0.37 | 0.37 | 0.39 | 0.39 | 0.39 | 0.39 | 0.39 | 0.41 | 0.41 | 0.41 | 0.41 | 0.41 |
| | 86°F(30.0°C) | TC | 5702 | 5710 | 5716 | 5716 | 5724 | 6046 | 6053 | 6059 | 6060 | 6067 | 6407 | 6415 | 6423 | 6424 | 6431 | 6793 | 6801 | 6808 | 6809 | 6817 |
| | | S/T | 0.29 | 0.34 | 0.39 | 0.39 | 0.44 | 0.31 | 0.36 | 0.41 | 0.41 | 0.47 | 0.33 | 0.38 | 0.44 | 0.44 | 0.50 | 0.35 | 0.41 | 0.46 | 0.46 | 0.53 |
| | | PI | 0.39 | 0.39 | 0.39 | 0.39 | 0.39 | 0.42 | 0.42 | 0.42 | 0.42 | 0.42 | 0.44 | 0.44 | 0.44 | 0.44 | 0.44 | 0.47 | 0.47 | 0.47 | 0.47 | 0.47 |
| | 95°F(35.0°C) | TC | 5402 | 5409 | 5415 | 5415 | 5422 | 5727 | 5734 | 5740 | 5741 | 5747 | 6069 | 6077 | 6084 | 6085 | 6092 | 6435 | 6442 | 6449 | 6450 | 6458 |
| | | S/T | 0.29 | 0.34 | 0.39 | 0.39 | 0.44 | 0.31 | 0.36 | 0.41 | 0.41 | 0.47 | 0.33 | 0.38 | 0.44 | 0.44 | 0.50 | 0.35 | 0.41 | 0.46 | 0.46 | 0.53 |
| | | PI | 0.50 | 0.50 | 0.50 | 0.50 | 0.50 | 0.53 | 0.53 | 0.53 | 0.53 | 0.53 | 0.56 | 0.56 | 0.56 | 0.56 | 0.56 | 0.59 | 0.59 | 0.59 | 0.59 | 0.59 |
| | 104°F(40.0°C) | TC | 4524 | 4530 | 4535 | 4536 | 4542 | 4797 | 4803 | 4807 | 4808 | 4814 | 5084 | 5090 | 5096 | 5097 | 5103 | 5390 | 5396 | 5402 | 5402 | 5409 |
| | | S/T | 0.30 | 0.35 | 0.40 | 0.40 | 0.45 | 0.32 | 0.37 | 0.42 | 0.42 | 0.48 | 0.33 | 0.39 | 0.45 | 0.45 | 0.51 | 0.35 | 0.42 | 0.47 | 0.47 | 0.54 |
| | | PI | 0.45 | 0.45 | 0.45 | 0.45 | 0.45 | 0.48 | 0.48 | 0.48 | 0.48 | 0.48 | 0.51 | 0.51 | 0.51 | 0.51 | 0.51 | 0.54 | 0.54 | 0.54 | 0.54 | 0.54 |
| | 110°F(43.0°C) | TC | 3998 | 4003 | 4008 | 4008 | 4013 | 4239 | 4244 | 4248 | 4249 | 4254 | 4492 | 4498 | 4503 | 4504 | 4509 | 4763 | 4768 | 4773 | 4774 | 4780 |
| | | S/T | 0.31 | 0.36 | 0.41 | 0.41 | 0.47 | 0.33 | 0.38 | 0.44 | 0.44 | 0.50 | 0.35 | 0.41 | 0.46 | 0.46 | 0.53 | 0.37 | 0.43 | 0.49 | 0.49 | 0.56 |
| | | PI | 0.42 | 0.42 | 0.42 | 0.42 | 0.43 | 0.45 | 0.45 | 0.45 | 0.45 | 0.45 | 0.48 | 0.48 | 0.48 | 0.48 | 0.48 | 0.50 | 0.50 | 0.51 | 0.51 | 0.51 |
| | 115°F(46.0°C) | TC | 3618 | 3623 | 3627 | 3627 | 3632 | 3836 | 3841 | 3845 | 3845 | 3850 | 4065 | 4071 | 4075 | 4076 | 4081 | 4310 | 4315 | 4320 | 4320 | 4326 |
| | | S/T | 0.31 | 0.37 | 0.42 | 0.42 | 0.47 | 0.33 | 0.39 | 0.44 | 0.44 | 0.50 | 0.35 | 0.41 | 0.47 | 0.47 | 0.53 | 0.37 | 0.44 | 0.50 | 0.50 | 0.57 |
| | | PI | 0.43 | 0.43 | 0.43 | 0.43 | 0.43 | 0.45 | 0.46 | 0.46 | 0.46 | 0.46 | 0.48 | 0.48 | 0.48 | 0.48 | 0.48 | 0.51 | 0.51 | 0.51 | 0.51 | 0.51 |
| | 122°F(50.0°C) | TC | 3112 | 3116 | 3119 | 3119 | 3124 | 3299 | 3303 | 3306 | 3307 | 3311 | 3496 | 3501 | 3505 | 3506 | 3509 | 3707 | 3711 | 3715 | 3716 | 3720 |
| | | S/T | 0.32 | 0.37 | 0.43 | 0.43 | 0.49 | 0.34 | 0.40 | 0.45 | 0.45 | 0.51 | 0.36 | 0.42 | 0.48 | 0.48 | 0.55 | 0.38 | 0.45 | 0.51 | 0.51 | 0.58 |
| | | PI | 0.44 | 0.44 | 0.44 | 0.44 | 0.44 | 0.46 | 0.46 | 0.46 | 0.46 | 0.46 | 0.49 | 0.49 | 0.49 | 0.49 | 0.49 | 0.52 | 0.52 | 0.52 | 0.52 | 0.52 |
| 176 | 5°F(-15.0°C) | TC | 7728 | 7738 | 7746 | 7747 | 7757 | 8193 | 8203 | 8211 | 8213 | 8223 | 8683 | 8694 | 8704 | 8706 | 8715 | 9206 | 9216 | 9226 | 9228 | 9239 |
| | | S/T | 0.32 | 0.38 | 0.43 | 0.43 | 0.49 | 0.34 | 0.40 | 0.46 | 0.46 | 0.52 | 0.36 | 0.43 | 0.48 | 0.48 | 0.55 | 0.39 | 0.45 | 0.51 | 0.51 | 0.59 |
| | | PI | 0.38 | 0.38 | 0.38 | 0.38 | 0.38 | 0.40 | 0.40 | 0.40 | 0.40 | 0.40 | 0.43 | 0.43 | 0.43 | 0.43 | 0.43 | 0.45 | 0.45 | 0.45 | 0.45 | 0.45 |
| | 14°F(-10.0°C) | TC | 7669 | 7679 | 7687 | 7688 | 7698 | 8131 | 8140 | 8149 | 8150 | 8160 | 8617 | 8628 | 8637 | 8639 | 8649 | 9136 | 9146 | 9156 | 9157 | 9169 |
| | | S/T | 0.32 | 0.38 | 0.43 | 0.43 | 0.49 | 0.34 | 0.40 | 0.46 | 0.46 | 0.52 | 0.36 | 0.43 | 0.49 | 0.49 | 0.55 | 0.39 | 0.45 | 0.51 | 0.52 | 0.59 |
| | | PI | 0.39 | 0.39 | 0.39 | 0.39 | 0.39 | 0.41 | 0.41 | 0.41 | 0.41 | 0.41 | 0.44 | 0.44 | 0.44 | 0.44 | 0.44 | 0.46 | 0.46 | 0.46 | 0.46 | 0.46 |
| | 17°F(-8.3°C) | TC | 7649 | 7659 | 7668 | 7668 | 7678 | 8110 | 8120 | 8128 | 8129 | 8139 | 8595 | 8606 | 8615 | 8617 | 8627 | 9112 | 9122 | 9132 | 9134 | 9145 |
| | | S/T | 0.33 | 0.38 | 0.43 | 0.43 | 0.49 | 0.34 | 0.40 | 0.46 | 0.46 | 0.52 | 0.37 | 0.43 | 0.49 | 0.49 | 0.56 | 0.39 | 0.45 | 0.52 | 0.52 | 0.59 |
| | | PI | 0.39 | 0.39 | 0.39 | 0.39 | 0.39 | 0.41 | 0.42 | 0.42 | 0.42 | 0.42 | 0.44 | 0.44 | 0.44 | 0.44 | 0.44 | 0.47 | 0.47 | 0.47 | 0.47 | 0.47 |
| | 23°F(-5.0°C) | TC | 7550 | 7560 | 7568 | 7569 | 7579 | 8005 | 8015 | 8023 | 8024 | 8034 | 8483 | 8494 | 8504 | 8505 | 8515 | 8995 | 9004 | 9014 | 9016 | 9027 |
| | | S/T | 0.33 | 0.38 | 0.44 | 0.44 | 0.50 | 0.35 | 0.41 | 0.46 | 0.46 | 0.53 | 0.37 | 0.43 | 0.49 | 0.49 | 0.56 | 0.39 | 0.46 | 0.52 | 0.52 | 0.59 |
| | | PI | 0.40 | 0.40 | 0.40 | 0.40 | 0.40 | 0.43 | 0.43 | 0.43 | 0.43 | 0.43 | 0.45 | 0.45 | 0.45 | 0.45 | 0.45 | 0.48 | 0.48 | 0.48 | 0.48 | 0.48 |

Manufacturer reserves the right to change, at any time, specifications and designs without notice and without obligations.

# Table 7: Cooling Performance 9K (Continued)

| AIRFLOW (CFM) | OUTDOOR DB°F (°C) | ID WB°F (°C) | 60.8°F(16.0°C) | | | | | 64.4°F(18.0°C) | | | | | 67°F(19.4°C) | | | | | 71.6°F(22.0°C) | | | | |
|---|---|---|---|---|---|---|---|---|---|---|---|---|---|---|---|---|---|---|---|---|---|---|
| | | ID DB°F (°C) | 73.4°F (23.0°C) | 77.0°F (25.0°C) | 80.0°F (26.7°C) | 80.6°F (27.0°C) | 84.2°F (29.0°C) | 73.4°F (23.0°C) | 77.0°F (25.0°C) | 80.0°F 26.7°C) | 80.6°F (27.0°C) | 84.2°F (29.0°C) | 73.4°F (23.0°C) | 77.0°F (25.0°C) | 80.0°F (26.7°C) | 80.6°F (27.0°C) | 84.2°F (29.0°C) | 73.4°F (23.0°C) | 77.0°F( 25.0°C) | 80.0°F (26.7°C) | 80.6°F (27.0°C) | 84.2°F (29.0°C) |
| 176 | 35°F(1.7°C) | TC | 7352 | 7362 | 7370 | 7371 | 7380 | 7795 | 7805 | 7812 | 7814 | 7823 | 8261 | 8272 | 8281 | 8283 | 8292 | 8759 | 8768 | 8778 | 8779 | 8790 |
| | | S/T | 0.33 | 0.39 | 0.44 | 0.44 | 0.50 | 0.35 | 0.41 | 0.46 | 0.46 | 0.53 | 0.37 | 0.43 | 0.49 | 0.49 | 0.56 | 0.39 | 0.46 | 0.52 | 0.52 | 0.59 |
| | | PI | 0.43 | 0.43 | 0.43 | 0.43 | 0.43 | 0.45 | 0.45 | 0.45 | 0.45 | 0.45 | 0.48 | 0.48 | 0.48 | 0.48 | 0.48 | 0.51 | 0.51 | 0.51 | 0.51 | 0.51 |
| | 41°F(5.0°C) | TC | 7095 | 7104 | 7112 | 7112 | 7122 | 7522 | 7531 | 7539 | 7540 | 7549 | 7972 | 7982 | 7991 | 7992 | 8001 | 8452 | 8461 | 8470 | 8472 | 8482 |
| | | S/T | 0.33 | 0.39 | 0.44 | 0.44 | 0.50 | 0.35 | 0.41 | 0.47 | 0.47 | 0.53 | 0.37 | 0.43 | 0.49 | 0.49 | 0.56 | 0.39 | 0.46 | 0.52 | 0.52 | 0.60 |
| | | PI | 0.35 | 0.35 | 0.35 | 0.35 | 0.35 | 0.37 | 0.37 | 0.37 | 0.37 | 0.37 | 0.39 | 0.39 | 0.39 | 0.39 | 0.39 | 0.42 | 0.42 | 0.42 | 0.42 | 0.42 |
| | 47°F(8.3°C) | TC | 6837 | 6846 | 6854 | 6854 | 6863 | 7249 | 7258 | 7265 | 7266 | 7275 | 7682 | 7692 | 7701 | 7702 | 7711 | 8145 | 8154 | 8163 | 8164 | 8174 |
| | | S/T | 0.33 | 0.39 | 0.44 | 0.44 | 0.50 | 0.35 | 0.41 | 0.47 | 0.47 | 0.53 | 0.37 | 0.44 | 0.49 | 0.49 | 0.56 | 0.39 | 0.46 | 0.52 | 0.52 | 0.60 |
| | | PI | 0.27 | 0.27 | 0.27 | 0.27 | 0.27 | 0.29 | 0.29 | 0.29 | 0.29 | 0.29 | 0.31 | 0.31 | 0.31 | 0.31 | 0.31 | 0.32 | 0.33 | 0.33 | 0.33 | 0.33 |
| | 50°F(10.0°C) | TC | 6873 | 6882 | 6889 | 6890 | 6899 | 7287 | 7296 | 7303 | 7304 | 7313 | 7722 | 7732 | 7741 | 7742 | 7751 | 8188 | 8196 | 8205 | 8207 | 8217 |
| | | S/T | 0.33 | 0.39 | 0.44 | 0.44 | 0.50 | 0.35 | 0.41 | 0.47 | 0.47 | 0.53 | 0.37 | 0.44 | 0.50 | 0.50 | 0.57 | 0.40 | 0.46 | 0.53 | 0.53 | 0.60 |
| | | PI | 0.28 | 0.28 | 0.28 | 0.28 | 0.28 | 0.30 | 0.30 | 0.30 | 0.30 | 0.30 | 0.32 | 0.32 | 0.32 | 0.32 | 0.32 | 0.34 | 0.34 | 0.34 | 0.34 | 0.34 |
| | 59°F(15.0°C) | TC | 6979 | 6989 | 6996 | 6997 | 7006 | 7400 | 7409 | 7416 | 7418 | 7426 | 7842 | 7852 | 7861 | 7863 | 7871 | 8315 | 8324 | 8333 | 8334 | 8344 |
| | | S/T | 0.33 | 0.39 | 0.44 | 0.44 | 0.51 | 0.35 | 0.41 | 0.47 | 0.47 | 0.54 | 0.37 | 0.44 | 0.50 | 0.50 | 0.57 | 0.40 | 0.47 | 0.53 | 0.53 | 0.60 |
| | | PI | 0.32 | 0.32 | 0.32 | 0.32 | 0.32 | 0.34 | 0.34 | 0.34 | 0.34 | 0.34 | 0.36 | 0.36 | 0.36 | 0.36 | 0.36 | 0.38 | 0.38 | 0.38 | 0.38 | 0.38 |
| | 68°F(20.0°C) | TC | 7086 | 7096 | 7103 | 7104 | 7113 | 7513 | 7522 | 7530 | 7531 | 7540 | 7962 | 7972 | 7981 | 7983 | 7992 | 8442 | 8451 | 8460 | 8462 | 8472 |
| | | S/T | 0.34 | 0.40 | 0.46 | 0.46 | 0.52 | 0.36 | 0.43 | 0.48 | 0.48 | 0.55 | 0.38 | 0.45 | 0.51 | 0.51 | 0.58 | 0.41 | 0.48 | 0.54 | 0.54 | 0.62 |
| | | PI | 0.35 | 0.35 | 0.35 | 0.35 | 0.35 | 0.37 | 0.37 | 0.37 | 0.37 | 0.37 | 0.39 | 0.39 | 0.40 | 0.40 | 0.40 | 0.42 | 0.42 | 0.42 | 0.42 | 0.42 |
| | 77°F(25.0°C) | TC | 7193 | 7203 | 7210 | 7211 | 7220 | 7626 | 7635 | 7643 | 7645 | 7654 | 8082 | 8093 | 8102 | 8103 | 8112 | 8569 | 8578 | 8588 | 8589 | 8600 |
| | | S/T | 0.35 | 0.41 | 0.46 | 0.46 | 0.53 | 0.37 | 0.43 | 0.49 | 0.49 | 0.56 | 0.39 | 0.46 | 0.52 | 0.52 | 0.59 | 0.41 | 0.48 | 0.55 | 0.55 | 0.63 |
| | | PI | 0.38 | 0.38 | 0.39 | 0.39 | 0.39 | 0.41 | 0.41 | 0.41 | 0.41 | 0.41 | 0.43 | 0.43 | 0.43 | 0.43 | 0.43 | 0.46 | 0.46 | 0.46 | 0.46 | 0.46 |
| | 82°F(27.8°C) | TC | 7150 | 7159 | 7167 | 7167 | 7177 | 7581 | 7590 | 7597 | 7599 | 7608 | 8034 | 8044 | 8053 | 8055 | 8064 | 8518 | 8527 | 8536 | 8538 | 8548 |
| | | S/T | 0.35 | 0.41 | 0.47 | 0.47 | 0.53 | 0.37 | 0.44 | 0.50 | 0.50 | 0.57 | 0.39 | 0.46 | 0.53 | 0.53 | 0.60 | 0.42 | 0.49 | 0.56 | 0.56 | 0.64 |
| | | PI | 0.42 | 0.42 | 0.42 | 0.42 | 0.42 | 0.45 | 0.45 | 0.45 | 0.45 | 0.45 | 0.48 | 0.48 | 0.48 | 0.48 | 0.48 | 0.50 | 0.50 | 0.51 | 0.51 | 0.51 |
| | 86°F(30.0°C) | TC | 6986 | 6996 | 7003 | 7003 | 7013 | 7407 | 7416 | 7423 | 7425 | 7434 | 7850 | 7860 | 7869 | 7870 | 7879 | 8323 | 8332 | 8341 | 8342 | 8352 |
| | | S/T | 0.36 | 0.42 | 0.47 | 0.47 | 0.54 | 0.38 | 0.44 | 0.50 | 0.50 | 0.57 | 0.40 | 0.47 | 0.53 | 0.53 | 0.61 | 0.42 | 0.50 | 0.56 | 0.57 | 0.64 |
| | | PI | 0.48 | 0.48 | 0.48 | 0.48 | 0.48 | 0.51 | 0.51 | 0.51 | 0.51 | 0.51 | 0.54 | 0.54 | 0.54 | 0.54 | 0.54 | 0.57 | 0.57 | 0.57 | 0.57 | 0.57 |
| | 95°F(35.0°C) | TC | 6618 | 6627 | 6634 | 6634 | 6643 | 7017 | 7025 | 7032 | 7033 | 7042 | 7436 | 7445 | 7454 | 7455 | 7463 | 7884 | 7892 | 7901 | 7902 | 7912 |
| | | S/T | 0.36 | 0.42 | 0.47 | 0.47 | 0.54 | 0.38 | 0.44 | 0.50 | 0.50 | 0.57 | 0.40 | 0.47 | 0.53 | 0.53 | 0.61 | 0.42 | 0.50 | 0.56 | 0.57 | 0.64 |
| | | PI | 0.61 | 0.61 | 0.61 | 0.61 | 0.61 | 0.64 | 0.64 | 0.64 | 0.64 | 0.65 | 0.68 | 0.68 | 0.68 | 0.68 | 0.68 | 0.72 | 0.72 | 0.72 | 0.72 | 0.73 |
| | 104°F(40.0°C) | TC | 5543 | 5550 | 5556 | 5557 | 5564 | 5877 | 5884 | 5890 | 5891 | 5898 | 6228 | 6236 | 6243 | 6244 | 6251 | 6603 | 6611 | 6618 | 6619 | 6627 |
| | | S/T | 0.36 | 0.43 | 0.49 | 0.49 | 0.55 | 0.39 | 0.45 | 0.52 | 0.52 | 0.59 | 0.41 | 0.48 | 0.55 | 0.55 | 0.62 | 0.43 | 0.51 | 0.58 | 0.58 | 0.66 |
| | | PI | 0.55 | 0.55 | 0.55 | 0.55 | 0.55 | 0.59 | 0.59 | 0.59 | 0.59 | 0.59 | 0.62 | 0.62 | 0.62 | 0.62 | 0.62 | 0.66 | 0.66 | 0.66 | 0.66 | 0.66 |

Manufacturer reserves the right to change, at any time, specifications and designs without notice and without obligations.

# Table 7: Cooling Performance 9K (Continued)

| AIRFLOW (CFM) | OUTDOOR DB°F (°C) | ID WB°F (°C) | 60.8°F(16.0°C) | | | | | 64.4°F(18.0°C) | | | | | 67°F(19.4°C) | | | | | 71.6°F(22.0°C) | | | | |
|---|---|---|---|---|---|---|---|---|---|---|---|---|---|---|---|---|---|---|---|---|---|---|
| | | ID DB°F (°C) | 73.4°F (23.0°C) | 77.0°F (25.0°C) | 80.0°F (26.7°C) | 80.6°F (27.0°C) | 84.2°F (29.0°C) | 73.4°F (23.0°C) | 77.0°F (25.0°C) | 80.0°F 26.7°C) | 80.6°F (27.0°C) | 84.2°F (29.0°C) | 73.4°F (23.0°C) | 77.0°F (25.0°C) | 80.0°F (26.7°C) | 80.6°F (27.0°C) | 84.2°F (29.0°C) | 73.4°F (23.0°C) | 77.0°F( 25.0°C) | 80.0°F (26.7°C) | 80.6°F (27.0°C) | 84.2°F (29.0°C) |
| 176 | 110°F(43.0°C) | TC | 4898 | 4905 | 4910 | 4910 | 4917 | 5193 | 5200 | 5205 | 5206 | 5212 | 5504 | 5511 | 5517 | 5518 | 5524 | 5835 | 5842 | 5848 | 5849 | 5856 |
| | | S/T | 0.38 | 0.44 | 0.50 | 0.50 | 0.57 | 0.40 | 0.47 | 0.53 | 0.53 | 0.61 | 0.42 | 0.50 | 0.57 | 0.57 | 0.65 | 0.45 | 0.53 | 0.60 | 0.60 | 0.68 |
| | | PI | 0.52 | 0.52 | 0.52 | 0.52 | 0.52 | 0.55 | 0.55 | 0.55 | 0.55 | 0.55 | 0.58 | 0.58 | 0.58 | 0.58 | 0.59 | 0.62 | 0.62 | 0.62 | 0.62 | 0.62 |
| | 115°F(46.0°C) | TC | 4433 | 4439 | 4444 | 4444 | 4450 | 4700 | 4706 | 4710 | 4711 | 4717 | 4981 | 4987 | 4993 | 4994 | 4999 | 5281 | 5287 | 5292 | 5293 | 5300 |
| | | S/T | 0.38 | 0.45 | 0.51 | 0.51 | 0.58 | 0.41 | 0.48 | 0.54 | 0.54 | 0.62 | 0.43 | 0.50 | 0.57 | 0.57 | 0.65 | 0.46 | 0.53 | 0.61 | 0.61 | 0.69 |
| | | PI | 0.53 | 0.53 | 0.53 | 0.53 | 0.53 | 0.56 | 0.56 | 0.56 | 0.56 | 0.56 | 0.59 | 0.59 | 0.59 | 0.59 | 0.59 | 0.63 | 0.63 | 0.63 | 0.63 | 0.63 |
| | 122°F(50.0°C) | TC | 3812 | 3818 | 3822 | 3822 | 3827 | 4042 | 4047 | 4051 | 4052 | 4057 | 4284 | 4289 | 4294 | 4295 | 4300 | 4542 | 4547 | 4552 | 4552 | 4558 |
| | | S/T | 0.39 | 0.46 | 0.52 | 0.52 | 0.59 | 0.41 | 0.49 | 0.55 | 0.55 | 0.63 | 0.44 | 0.52 | 0.59 | 0.59 | 0.67 | 0.47 | 0.55 | 0.62 | 0.62 | 0.71 |
| | | PI | 0.53 | 0.53 | 0.54 | 0.54 | 0.54 | 0.57 | 0.57 | 0.57 | 0.57 | 0.57 | 0.60 | 0.60 | 0.60 | 0.60 | 0.60 | 0.64 | 0.64 | 0.64 | 0.64 | 0.64 |
| 247 | 5°F(-15.0°C) | TC | 9468 | 9480 | 9491 | 9491 | 9504 | 10038 | 10050 | 10060 | 10062 | 10074 | 10638 | 10652 | 10664 | 10666 | 10678 | 11279 | 11291 | 11303 | 11305 | 11319 |
| | | S/T | 0.40 | 0.47 | 0.53 | 0.53 | 0.60 | 0.42 | 0.49 | 0.56 | 0.56 | 0.64 | 0.45 | 0.52 | 0.59 | 0.59 | 0.68 | 0.47 | 0.55 | 0.63 | 0.63 | 0.72 |
| | | PI | 0.47 | 0.47 | 0.47 | 0.47 | 0.47 | 0.49 | 0.49 | 0.50 | 0.50 | 0.50 | 0.52 | 0.52 | 0.52 | 0.52 | 0.53 | 0.56 | 0.56 | 0.56 | 0.56 | 0.56 |
| | 14°F(-10.0°C) | TC | 9395 | 9408 | 9418 | 9419 | 9431 | 9962 | 9973 | 9983 | 9985 | 9997 | 10557 | 10570 | 10582 | 10584 | 10596 | 11193 | 11205 | 11217 | 11219 | 11233 |
| | | S/T | 0.40 | 0.47 | 0.53 | 0.53 | 0.60 | 0.42 | 0.49 | 0.56 | 0.56 | 0.64 | 0.45 | 0.52 | 0.60 | 0.60 | 0.68 | 0.47 | 0.56 | 0.63 | 0.63 | 0.72 |
| | | PI | 0.48 | 0.48 | 0.48 | 0.48 | 0.48 | 0.50 | 0.51 | 0.51 | 0.51 | 0.51 | 0.53 | 0.54 | 0.54 | 0.54 | 0.54 | 0.57 | 0.57 | 0.57 | 0.57 | 0.57 |
| | 17°F(-8.3°C) | TC | 9371 | 9384 | 9394 | 9394 | 9407 | 9936 | 9948 | 9958 | 9960 | 9971 | 10530 | 10543 | 10555 | 10557 | 10569 | 11164 | 11176 | 11188 | 11190 | 11204 |
| | | S/T | 0.40 | 0.47 | 0.53 | 0.53 | 0.61 | 0.42 | 0.50 | 0.56 | 0.56 | 0.64 | 0.45 | 0.53 | 0.60 | 0.60 | 0.68 | 0.47 | 0.56 | 0.63 | 0.63 | 0.72 |
| | | PI | 0.48 | 0.48 | 0.48 | 0.48 | 0.48 | 0.51 | 0.51 | 0.51 | 0.51 | 0.51 | 0.54 | 0.54 | 0.54 | 0.54 | 0.54 | 0.57 | 0.57 | 0.57 | 0.57 | 0.57 |
| | 23°F(-5.0°C) | TC | 9250 | 9262 | 9272 | 9273 | 9285 | 9808 | 9819 | 9829 | 9831 | 9842 | 10393 | 10407 | 10419 | 10420 | 10432 | 11020 | 11032 | 11044 | 11045 | 11059 |
| | | S/T | 0.40 | 0.47 | 0.53 | 0.53 | 0.61 | 0.42 | 0.50 | 0.57 | 0.57 | 0.65 | 0.45 | 0.53 | 0.60 | 0.60 | 0.68 | 0.48 | 0.56 | 0.64 | 0.64 | 0.73 |
| | | PI | 0.49 | 0.49 | 0.49 | 0.49 | 0.50 | 0.52 | 0.52 | 0.52 | 0.52 | 0.53 | 0.55 | 0.56 | 0.56 | 0.56 | 0.56 | 0.59 | 0.59 | 0.59 | 0.59 | 0.59 |
| | 35°F(1.7°C) | TC | 9008 | 9020 | 9030 | 9030 | 9042 | 9551 | 9562 | 9571 | 9573 | 9585 | 10121 | 10134 | 10146 | 10148 | 10159 | 10731 | 10743 | 10754 | 10756 | 10769 |
| | | S/T | 0.40 | 0.47 | 0.54 | 0.54 | 0.61 | 0.43 | 0.50 | 0.57 | 0.57 | 0.65 | 0.45 | 0.53 | 0.60 | 0.60 | 0.69 | 0.48 | 0.56 | 0.64 | 0.64 | 0.73 |
| | | PI | 0.52 | 0.52 | 0.52 | 0.52 | 0.52 | 0.55 | 0.55 | 0.56 | 0.56 | 0.56 | 0.59 | 0.59 | 0.59 | 0.59 | 0.59 | 0.62 | 0.62 | 0.62 | 0.62 | 0.62 |
| | 41°F(5.0°C) | TC | 8692 | 8704 | 8713 | 8714 | 8725 | 9216 | 9227 | 9236 | 9238 | 9249 | 9767 | 9779 | 9790 | 9792 | 9803 | 10355 | 10366 | 10378 | 10379 | 10392 |
| | | S/T | 0.40 | 0.47 | 0.54 | 0.54 | 0.61 | 0.43 | 0.50 | 0.57 | 0.57 | 0.65 | 0.45 | 0.53 | 0.60 | 0.60 | 0.69 | 0.48 | 0.56 | 0.64 | 0.64 | 0.73 |
| | | PI | 0.43 | 0.43 | 0.43 | 0.43 | 0.43 | 0.45 | 0.45 | 0.46 | 0.46 | 0.46 | 0.48 | 0.48 | 0.48 | 0.48 | 0.48 | 0.51 | 0.51 | 0.51 | 0.51 | 0.51 |
| | 47°F(8.3°C) | TC | 8376 | 8388 | 8397 | 8397 | 8408 | 8881 | 8892 | 8901 | 8902 | 8913 | 9412 | 9424 | 9435 | 9436 | 9447 | 9979 | 9990 | 10001 | 10002 | 10015 |
| | | S/T | 0.40 | 0.47 | 0.54 | 0.54 | 0.61 | 0.43 | 0.50 | 0.57 | 0.57 | 0.65 | 0.45 | 0.53 | 0.61 | 0.61 | 0.69 | 0.48 | 0.57 | 0.64 | 0.64 | 0.73 |
| | | PI | 0.33 | 0.33 | 0.33 | 0.33 | 0.34 | 0.35 | 0.35 | 0.35 | 0.36 | 0.36 | 0.38 | 0.38 | 0.38 | 0.38 | 0.38 | 0.40 | 0.40 | 0.40 | 0.40 | 0.40 |
| | 50°F(10.0°C) | TC | 8420 | 8431 | 8440 | 8441 | 8452 | 8928 | 8938 | 8947 | 8949 | 8959 | 9461 | 9473 | 9484 | 9485 | 9496 | 10031 | 10042 | 10053 | 10054 | 10067 |
| | | S/T | 0.41 | 0.48 | 0.54 | 0.54 | 0.62 | 0.43 | 0.51 | 0.57 | 0.57 | 0.66 | 0.46 | 0.54 | 0.61 | 0.61 | 0.69 | 0.48 | 0.57 | 0.65 | 0.65 | 0.74 |
| | | PI | 0.35 | 0.35 | 0.35 | 0.35 | 0.35 | 0.37 | 0.37 | 0.37 | 0.37 | 0.37 | 0.39 | 0.39 | 0.39 | 0.39 | 0.39 | 0.41 | 0.41 | 0.42 | 0.42 | 0.42 |

Manufacturer reserves the right to change, at any time, specifications and designs without notice and without obligations.

# Table 7: Cooling Performance 9K (Continued)

| AIRFLOW (CFM) | OUTDOOR DB°F (°C) | ID WB°F (°C) | 60.8°F(16.0°C) | | | | | 64.4°F(18.0°C) | | | | | 67°F(19.4°C) | | | | | 71.6°F(22.0°C) | | | | |
|---|---|---|---|---|---|---|---|---|---|---|---|---|---|---|---|---|---|---|---|---|---|---|
| | | ID DB°F (°C) | 73.4°F (23.0°C) | 77.0°F (25.0°C) | 80.0°F (26.7°C) | 80.6°F (27.0°C) | 84.2°F (29.0°C) | 73.4°F (23.0°C) | 77.0°F (25.0°C) | 80.0°F 26.7°C) | 80.6°F (27.0°C) | 84.2°F (29.0°C) | 73.4°F (23.0°C) | 77.0°F (25.0°C) | 80.0°F (26.7°C) | 80.6°F (27.0°C) | 84.2°F (29.0°C) | 73.4°F (23.0°C) | 77.0°F( 25.0°C) | 80.0°F (26.7°C) | 80.6°F (27.0°C) | 84.2°F (29.0°C) |
| 247 | 59°F(15.0°C) | TC | 8551 | 8562 | 8572 | 8572 | 8584 | 9066 | 9077 | 9086 | 9088 | 9098 | 9608 | 9620 | 9631 | 9633 | 9644 | 10187 | 10198 | 10209 | 10210 | 10223 |
| | | S/T | 0.41 | 0.48 | 0.54 | 0.54 | 0.62 | 0.43 | 0.51 | 0.58 | 0.58 | 0.66 | 0.46 | 0.54 | 0.61 | 0.61 | 0.70 | 0.49 | 0.57 | 0.65 | 0.65 | 0.74 |
| | | PI | 0.39 | 0.39 | 0.39 | 0.39 | 0.39 | 0.41 | 0.41 | 0.41 | 0.41 | 0.41 | 0.44 | 0.44 | 0.44 | 0.44 | 0.44 | 0.46 | 0.46 | 0.46 | 0.46 | 0.46 |
| | 68°F(20.0°C) | TC | 8682 | 8693 | 8703 | 8703 | 8715 | 9205 | 9216 | 9225 | 9227 | 9238 | 9755 | 9767 | 9778 | 9780 | 9791 | 10343 | 10354 | 10365 | 10367 | 10380 |
| | | S/T | 0.42 | 0.49 | 0.56 | 0.56 | 0.64 | 0.44 | 0.52 | 0.59 | 0.59 | 0.68 | 0.47 | 0.55 | 0.63 | 0.63 | 0.72 | 0.50 | 0.59 | 0.67 | 0.67 | 0.76 |
| | | PI | 0.43 | 0.43 | 0.43 | 0.43 | 0.43 | 0.46 | 0.46 | 0.46 | 0.46 | 0.46 | 0.48 | 0.48 | 0.48 | 0.48 | 0.48 | 0.51 | 0.51 | 0.51 | 0.51 | 0.51 |
| | 77°F(25.0°C) | TC | 8812 | 8824 | 8834 | 8834 | 8846 | 9344 | 9355 | 9364 | 9366 | 9377 | 9902 | 9915 | 9926 | 9928 | 9939 | 10498 | 10510 | 10521 | 10523 | 10536 |
| | | S/T | 0.42 | 0.50 | 0.57 | 0.57 | 0.65 | 0.45 | 0.53 | 0.60 | 0.60 | 0.68 | 0.48 | 0.56 | 0.64 | 0.64 | 0.73 | 0.51 | 0.59 | 0.67 | 0.67 | 0.77 |
| | | PI | 0.47 | 0.47 | 0.47 | 0.47 | 0.47 | 0.50 | 0.50 | 0.50 | 0.50 | 0.50 | 0.53 | 0.53 | 0.53 | 0.53 | 0.53 | 0.56 | 0.56 | 0.56 | 0.56 | 0.56 |
| | 82°F(27.8°C) | TC | 8760 | 8771 | 8781 | 8781 | 8793 | 9288 | 9299 | 9308 | 9310 | 9321 | 9842 | 9855 | 9866 | 9868 | 9879 | 10435 | 10447 | 10458 | 10460 | 10473 |
| | | S/T | 0.43 | 0.51 | 0.57 | 0.57 | 0.65 | 0.46 | 0.54 | 0.61 | 0.61 | 0.69 | 0.48 | 0.57 | 0.64 | 0.64 | 0.74 | 0.51 | 0.60 | 0.68 | 0.68 | 0.78 |
| | | PI | 0.52 | 0.52 | 0.52 | 0.52 | 0.52 | 0.55 | 0.55 | 0.55 | 0.55 | 0.55 | 0.58 | 0.58 | 0.58 | 0.58 | 0.58 | 0.62 | 0.62 | 0.62 | 0.62 | 0.62 |
| | 86°F(30.0°C) | TC | 8559 | 8571 | 8580 | 8580 | 8592 | 9075 | 9086 | 9095 | 9096 | 9107 | 9617 | 9630 | 9640 | 9642 | 9653 | 10196 | 10208 | 10219 | 10220 | 10233 |
| | | S/T | 0.44 | 0.51 | 0.58 | 0.58 | 0.66 | 0.46 | 0.54 | 0.62 | 0.62 | 0.70 | 0.49 | 0.57 | 0.65 | 0.65 | 0.74 | 0.52 | 0.61 | 0.69 | 0.69 | 0.79 |
| | | PI | 0.59 | 0.59 | 0.59 | 0.59 | 0.59 | 0.62 | 0.62 | 0.62 | 0.62 | 0.63 | 0.66 | 0.66 | 0.66 | 0.66 | 0.66 | 0.70 | 0.70 | 0.70 | 0.70 | 0.70 |
| | 95°F(35.0°C) | TC | 8108 | 8119 | 8127 | 8128 | 8139 | 8596 | 8606 | 8615 | 8617 | 8627 | 9110 | 9122 | 9132 | 9134 | 9144 | 9659 | 9669 | 9680 | 9681 | 9693 |
| | | S/T | 0.44 | 0.51 | 0.58 | 0.58 | 0.66 | 0.46 | 0.54 | 0.62 | 0.62 | 0.70 | 0.49 | 0.57 | 0.65 | 0.65 | 0.74 | 0.52 | 0.61 | 0.69 | 0.69 | 0.79 |
| | | PI | 0.74 | 0.74 | 0.75 | 0.75 | 0.75 | 0.79 | 0.79 | 0.79 | 0.79 | 0.79 | 0.84 | 0.84 | 0.84 | 0.84 | 0.84 | 0.89 | 0.89 | 0.89 | 0.89 | 0.89 |
| | 104°F(40.0°C) | TC | 6791 | 6800 | 6807 | 6808 | 6817 | 7200 | 7209 | 7216 | 7217 | 7226 | 7630 | 7640 | 7649 | 7650 | 7659 | 8090 | 8099 | 8108 | 8109 | 8119 |
| | | S/T | 0.45 | 0.52 | 0.60 | 0.60 | 0.68 | 0.47 | 0.56 | 0.63 | 0.63 | 0.72 | 0.50 | 0.59 | 0.67 | 0.67 | 0.76 | 0.53 | 0.62 | 0.71 | 0.71 | 0.81 |
| | | PI | 0.68 | 0.68 | 0.68 | 0.68 | 0.68 | 0.72 | 0.72 | 0.72 | 0.72 | 0.72 | 0.76 | 0.76 | 0.76 | 0.76 | 0.76 | 0.81 | 0.81 | 0.81 | 0.81 | 0.81 |
| | 110°F(43.0°C) | TC | 6001 | 6009 | 6016 | 6016 | 6024 | 6363 | 6370 | 6377 | 6378 | 6385 | 6743 | 6752 | 6759 | 6760 | 6768 | 7149 | 7157 | 7165 | 7166 | 7175 |
| | | S/T | 0.46 | 0.54 | 0.62 | 0.62 | 0.70 | 0.49 | 0.58 | 0.65 | 0.65 | 0.75 | 0.52 | 0.61 | 0.69 | 0.69 | 0.79 | 0.55 | 0.65 | 0.74 | 0.74 | 0.84 |
| | | PI | 0.64 | 0.64 | 0.64 | 0.64 | 0.64 | 0.67 | 0.67 | 0.68 | 0.68 | 0.68 | 0.71 | 0.72 | 0.72 | 0.72 | 0.72 | 0.76 | 0.76 | 0.76 | 0.76 | 0.76 |
| | 115°F(46.0°C) | TC | 5431 | 5438 | 5444 | 5444 | 5452 | 5758 | 5765 | 5771 | 5772 | 5779 | 6102 | 6110 | 6117 | 6118 | 6125 | 6470 | 6477 | 6484 | 6485 | 6493 |
| | | S/T | 0.47 | 0.55 | 0.62 | 0.62 | 0.71 | 0.50 | 0.58 | 0.66 | 0.66 | 0.75 | 0.53 | 0.62 | 0.70 | 0.70 | 0.80 | 0.56 | 0.65 | 0.74 | 0.74 | 0.85 |
| | | PI | 0.64 | 0.64 | 0.65 | 0.65 | 0.65 | 0.68 | 0.68 | 0.68 | 0.68 | 0.68 | 0.72 | 0.72 | 0.72 | 0.73 | 0.73 | 0.77 | 0.77 | 0.77 | 0.77 | 0.77 |
| | 122°F(50.0°C) | TC | 4671 | 4677 | 4682 | 4682 | 4689 | 4952 | 4958 | 4963 | 4964 | 4970 | 5248 | 5255 | 5261 | 5262 | 5268 | 5564 | 5570 | 5576 | 5577 | 5584 |
| | | S/T | 0.48 | 0.56 | 0.64 | 0.64 | 0.73 | 0.51 | 0.60 | 0.68 | 0.68 | 0.77 | 0.54 | 0.63 | 0.72 | 0.72 | 0.82 | 0.57 | 0.67 | 0.76 | 0.76 | 0.87 |
| | | PI | 0.65 | 0.66 | 0.66 | 0.66 | 0.66 | 0.69 | 0.69 | 0.70 | 0.70 | 0.70 | 0.74 | 0.74 | 0.74 | 0.74 | 0.74 | 0.78 | 0.78 | 0.78 | 0.78 | 0.78 |
| 312 | 5°F(-15.0°C) | TC | 11599 | 11615 | 11627 | 11628 | 11644 | 12298 | 12313 | 12325 | 12327 | 12342 | 13033 | 13050 | 13065 | 13067 | 13082 | 13818 | 13833 | 13848 | 13851 | 13868 |
| | | S/T | 0.49 | 0.57 | 0.65 | 0.65 | 0.74 | 0.51 | 0.60 | 0.69 | 0.69 | 0.78 | 0.55 | 0.64 | 0.73 | 0.73 | 0.83 | 0.58 | 0.68 | 0.77 | 0.77 | 0.88 |
| | | PI | 0.57 | 0.57 | 0.57 | 0.57 | 0.57 | 0.61 | 0.61 | 0.61 | 0.61 | 0.61 | 0.64 | 0.64 | 0.64 | 0.64 | 0.64 | 0.68 | 0.68 | 0.68 | 0.68 | 0.68 |

Manufacturer reserves the right to change, at any time, specifications and designs without notice and without obligations.

# Table 7: Cooling Performance 9K (Continued)

| AIRFLOW (CFM) | OUTDOOR DB°F (°C) | ID WB°F (°C) | 60.8°F(16.0°C) | | | | | 64.4°F(18.0°C) | | | | | 67°F(19.4°C) | | | | | 71.6°F(22.0°C) | | | | |
|---|---|---|---|---|---|---|---|---|---|---|---|---|---|---|---|---|---|---|---|---|---|---|
| | | ID DB°F (°C) | 73.4°F (23.0°C) | 77.0°F (25.0°C) | 80.0°F (26.7°C) | 80.6°F (27.0°C) | 84.2°F (29.0°C) | 73.4°F (23.0°C) | 77.0°F (25.0°C) | 80.0°F 26.7°C) | 80.6°F (27.0°C) | 84.2°F (29.0°C) | 73.4°F (23.0°C) | 77.0°F (25.0°C) | 80.0°F (26.7°C) | 80.6°F (27.0°C) | 84.2°F (29.0°C) | 73.4°F (23.0°C) | 77.0°F( 25.0°C) | 80.0°F (26.7°C) | 80.6°F (27.0°C) | 84.2°F (29.0°C) |
| 312 | 14°F(-10.0°C) | TC | 11511 | 11526 | 11539 | 11539 | 11555 | 12204 | 12219 | 12231 | 12233 | 12248 | 12934 | 12950 | 12965 | 12967 | 12982 | 13713 | 13728 | 13743 | 13745 | 13762 |
| | | S/T | 0.49 | 0.57 | 0.65 | 0.65 | 0.74 | 0.52 | 0.61 | 0.69 | 0.69 | 0.78 | 0.55 | 0.64 | 0.73 | 0.73 | 0.83 | 0.58 | 0.68 | 0.77 | 0.77 | 0.88 |
| | | PI | 0.58 | 0.58 | 0.58 | 0.58 | 0.59 | 0.62 | 0.62 | 0.62 | 0.62 | 0.62 | 0.65 | 0.66 | 0.66 | 0.66 | 0.66 | 0.69 | 0.70 | 0.70 | 0.70 | 0.70 |
| | 17°F(-8.3°C) | TC | 11481 | 11497 | 11509 | 11509 | 11525 | 12173 | 12187 | 12200 | 12202 | 12216 | 12900 | 12917 | 12931 | 12934 | 12948 | 13678 | 13692 | 13707 | 13710 | 13727 |
| | | S/T | 0.49 | 0.57 | 0.65 | 0.65 | 0.74 | 0.52 | 0.61 | 0.69 | 0.69 | 0.79 | 0.55 | 0.64 | 0.73 | 0.73 | 0.83 | 0.58 | 0.68 | 0.78 | 0.78 | 0.88 |
| | | PI | 0.59 | 0.59 | 0.59 | 0.59 | 0.59 | 0.62 | 0.62 | 0.62 | 0.62 | 0.62 | 0.66 | 0.66 | 0.66 | 0.66 | 0.66 | 0.70 | 0.70 | 0.70 | 0.70 | 0.70 |
| | 23°F(-5.0°C) | TC | 11333 | 11348 | 11360 | 11361 | 11376 | 12016 | 12030 | 12042 | 12044 | 12058 | 12734 | 12750 | 12764 | 12767 | 12781 | 13501 | 13515 | 13530 | 13532 | 13549 |
| | | S/T | 0.49 | 0.58 | 0.65 | 0.65 | 0.75 | 0.52 | 0.61 | 0.69 | 0.69 | 0.79 | 0.55 | 0.65 | 0.74 | 0.74 | 0.84 | 0.58 | 0.69 | 0.78 | 0.78 | 0.89 |
| | | PI | 0.60 | 0.61 | 0.61 | 0.61 | 0.61 | 0.64 | 0.64 | 0.64 | 0.64 | 0.64 | 0.68 | 0.68 | 0.68 | 0.68 | 0.68 | 0.72 | 0.72 | 0.72 | 0.72 | 0.72 |
| | 35°F(1.7°C) | TC | 11036 | 11051 | 11063 | 11063 | 11078 | 11701 | 11715 | 11726 | 11729 | 11743 | 12400 | 12416 | 12430 | 12432 | 12446 | 13147 | 13161 | 13176 | 13178 | 13194 |
| | | S/T | 0.49 | 0.58 | 0.66 | 0.66 | 0.75 | 0.52 | 0.61 | 0.70 | 0.70 | 0.79 | 0.55 | 0.65 | 0.74 | 0.74 | 0.84 | 0.59 | 0.69 | 0.78 | 0.78 | 0.89 |
| | | PI | 0.64 | 0.64 | 0.64 | 0.64 | 0.64 | 0.68 | 0.68 | 0.68 | 0.68 | 0.68 | 0.72 | 0.72 | 0.72 | 0.72 | 0.72 | 0.76 | 0.76 | 0.76 | 0.76 | 0.77 |
| | 41°F(5.0°C) | TC | 10649 | 10663 | 10675 | 10675 | 10690 | 11291 | 11304 | 11315 | 11318 | 11331 | 11965 | 11981 | 11994 | 11997 | 12010 | 12686 | 12700 | 12714 | 12716 | 12732 |
| | | S/T | 0.49 | 0.58 | 0.66 | 0.66 | 0.75 | 0.52 | 0.61 | 0.70 | 0.70 | 0.80 | 0.56 | 0.65 | 0.74 | 0.74 | 0.84 | 0.59 | 0.69 | 0.78 | 0.78 | 0.89 |
| | | PI | 0.52 | 0.53 | 0.53 | 0.53 | 0.53 | 0.56 | 0.56 | 0.56 | 0.56 | 0.56 | 0.59 | 0.59 | 0.59 | 0.59 | 0.59 | 0.63 | 0.63 | 0.63 | 0.63 | 0.63 |
| | 47°F(8.3°C) | TC | 10262 | 10276 | 10287 | 10288 | 10302 | 10881 | 10894 | 10905 | 10907 | 10920 | 11531 | 11546 | 11559 | 11561 | 11574 | 12226 | 12239 | 12252 | 12254 | 12270 |
| | | S/T | 0.50 | 0.58 | 0.66 | 0.66 | 0.75 | 0.53 | 0.62 | 0.70 | 0.70 | 0.80 | 0.56 | 0.65 | 0.74 | 0.74 | 0.85 | 0.59 | 0.69 | 0.79 | 0.79 | 0.90 |
| | | PI | 0.41 | 0.41 | 0.41 | 0.41 | 0.41 | 0.43 | 0.43 | 0.43 | 0.43 | 0.44 | 0.46 | 0.46 | 0.46 | 0.46 | 0.46 | 0.49 | 0.49 | 0.49 | 0.49 | 0.49 |
| | 50°F(10.0°C) | TC | 10316 | 10330 | 10341 | 10341 | 10355 | 10938 | 10950 | 10961 | 10963 | 10976 | 11591 | 11606 | 11619 | 11621 | 11634 | 12289 | 12303 | 12316 | 12318 | 12333 |
| | | S/T | 0.50 | 0.58 | 0.66 | 0.66 | 0.76 | 0.53 | 0.62 | 0.70 | 0.70 | 0.80 | 0.56 | 0.66 | 0.75 | 0.75 | 0.85 | 0.59 | 0.70 | 0.79 | 0.79 | 0.90 |
| | | PI | 0.43 | 0.43 | 0.43 | 0.43 | 0.43 | 0.45 | 0.45 | 0.45 | 0.45 | 0.45 | 0.48 | 0.48 | 0.48 | 0.48 | 0.48 | 0.51 | 0.51 | 0.51 | 0.51 | 0.51 |
| | 59°F(15.0°C) | TC | 10476 | 10490 | 10501 | 10502 | 10516 | 11107 | 11121 | 11132 | 11134 | 11147 | 11771 | 11786 | 11799 | 11802 | 11815 | 12480 | 12494 | 12507 | 12509 | 12525 |
| | | S/T | 0.50 | 0.59 | 0.67 | 0.67 | 0.76 | 0.53 | 0.62 | 0.71 | 0.71 | 0.81 | 0.56 | 0.66 | 0.75 | 0.75 | 0.86 | 0.60 | 0.70 | 0.80 | 0.80 | 0.91 |
| | | PI | 0.48 | 0.48 | 0.48 | 0.48 | 0.48 | 0.51 | 0.51 | 0.51 | 0.51 | 0.51 | 0.54 | 0.54 | 0.54 | 0.54 | 0.54 | 0.57 | 0.57 | 0.57 | 0.57 | 0.57 |
| | 68°F(20.0°C) | TC | 10636 | 10651 | 10662 | 10663 | 10677 | 11277 | 11291 | 11302 | 11304 | 11317 | 11951 | 11967 | 11980 | 11982 | 11996 | 12671 | 12685 | 12699 | 12701 | 12717 |
| | | S/T | 0.51 | 0.60 | 0.69 | 0.69 | 0.78 | 0.54 | 0.64 | 0.73 | 0.73 | 0.83 | 0.58 | 0.68 | 0.77 | 0.77 | 0.88 | 0.61 | 0.72 | 0.82 | 0.82 | 0.93 |
| | | PI | 0.53 | 0.53 | 0.53 | 0.53 | 0.53 | 0.56 | 0.56 | 0.56 | 0.56 | 0.56 | 0.59 | 0.59 | 0.59 | 0.59 | 0.59 | 0.63 | 0.63 | 0.63 | 0.63 | 0.63 |
| | 77°F(25.0°C) | TC | 10797 | 10811 | 10823 | 10823 | 10838 | 11447 | 11461 | 11472 | 11474 | 11488 | 12131 | 12147 | 12160 | 12163 | 12176 | 12862 | 12876 | 12890 | 12892 | 12908 |
| | | S/T | 0.52 | 0.61 | 0.69 | 0.69 | 0.79 | 0.55 | 0.65 | 0.74 | 0.74 | 0.84 | 0.59 | 0.69 | 0.78 | 0.78 | 0.89 | 0.62 | 0.73 | 0.83 | 0.83 | 0.94 |
| | | PI | 0.58 | 0.58 | 0.58 | 0.58 | 0.58 | 0.61 | 0.61 | 0.61 | 0.61 | 0.61 | 0.65 | 0.65 | 0.65 | 0.65 | 0.65 | 0.69 | 0.69 | 0.69 | 0.69 | 0.69 |
| | 82°F(27.8°C) | TC | 10732 | 10746 | 10758 | 10758 | 10773 | 11379 | 11392 | 11403 | 11406 | 11419 | 12058 | 12074 | 12088 | 12090 | 12103 | 12785 | 12799 | 12813 | 12815 | 12831 |
| | | S/T | 0.53 | 0.62 | 0.70 | 0.70 | 0.80 | 0.56 | 0.66 | 0.75 | 0.75 | 0.85 | 0.59 | 0.70 | 0.79 | 0.79 | 0.90 | 0.63 | 0.74 | 0.84 | 0.84 | 0.95 |
| | | PI | 0.64 | 0.64 | 0.64 | 0.64 | 0.64 | 0.67 | 0.67 | 0.67 | 0.67 | 0.68 | 0.71 | 0.71 | 0.72 | 0.72 | 0.72 | 0.76 | 0.76 | 0.76 | 0.76 | 0.76 |

Manufacturer reserves the right to change, at any time, specifications and designs without notice and without obligations.

# Table 7: Cooling Performance 9K (Continued)

| AIRFLOW (CFM) | OUTDOOR DB°F (°C) | ID WB°F (°C) | 60.8°F(16.0°C) | | | | | 64.4°F(18.0°C) | | | | | 67°F(19.4°C) | | | | | 71.6°F(22.0°C) | | | | |
|---|---|---|---|---|---|---|---|---|---|---|---|---|---|---|---|---|---|---|---|---|---|---|
| | | ID DB°F (°C) | 73.4°F (23.0°C) | 77.0°F (25.0°C) | 80.0°F (26.7°C) | 80.6°F (27.0°C) | 84.2°F (29.0°C) | 73.4°F (23.0°C) | 77.0°F (25.0°C) | 80.0°F 26.7°C) | 80.6°F (27.0°C) | 84.2°F (29.0°C) | 73.4°F (23.0°C) | 77.0°F (25.0°C) | 80.0°F (26.7°C) | 80.6°F (27.0°C) | 84.2°F (29.0°C) | 73.4°F (23.0°C) | 77.0°F( 25.0°C) | 80.0°F (26.7°C) | 80.6°F (27.0°C) | 84.2°F (29.0°C) |
| 312 | 86°F(30.0°C) | TC | 10486 | 10500 | 10512 | 10512 | 10526 | 11118 | 11131 | 11142 | 11144 | 11158 | 11782 | 11798 | 11811 | 11813 | 11826 | 12492 | 12506 | 12519 | 12521 | 12537 |
| | | S/T | 0.53 | 0.63 | 0.71 | 0.71 | 0.81 | 0.57 | 0.66 | 0.75 | 0.75 | 0.86 | 0.60 | 0.70 | 0.80 | 0.80 | 0.91 | 0.64 | 0.75 | 0.85 | 0.85 | 0.97 |
| | | PI | 0.72 | 0.72 | 0.72 | 0.72 | 0.72 | 0.76 | 0.76 | 0.77 | 0.77 | 0.77 | 0.81 | 0.81 | 0.81 | 0.81 | 0.81 | 0.86 | 0.86 | 0.86 | 0.86 | 0.86 |
| | 95°F(35.0°C) | TC | 9933 | 9947 | 9957 | 9958 | 9971 | 10532 | 10544 | 10555 | 10557 | 10569 | 11161 | 11175 | 11188 | 11190 | 11203 | 11833 | 11846 | 11859 | 11861 | 11876 |
| | | S/T | 0.53 | 0.63 | 0.71 | 0.71 | 0.81 | 0.57 | 0.66 | 0.75 | 0.75 | 0.86 | 0.60 | 0.70 | 0.80 | 0.80 | 0.91 | 0.64 | 0.75 | 0.85 | 0.85 | 0.97 |
| | | PI | 0.91 | 0.91 | 0.91 | 0.91 | 0.91 | 0.97 | 0.97 | 0.97 | 0.97 | 0.97 | 1.02 | 1.02 | 1.03 | 1.03 | 1.03 | 1.09 | 1.09 | 1.09 | 1.09 | 1.09 |
| | 104°F(40.0°C) | TC | 8320 | 8331 | 8340 | 8341 | 8352 | 8821 | 8832 | 8841 | 8842 | 8853 | 9348 | 9361 | 9371 | 9373 | 9383 | 9912 | 9923 | 9933 | 9935 | 9947 |
| | | S/T | 0.55 | 0.64 | 0.73 | 0.73 | 0.83 | 0.58 | 0.68 | 0.77 | 0.77 | 0.88 | 0.62 | 0.72 | 0.82 | 0.82 | 0.93 | 0.65 | 0.76 | 0.87 | 0.87 | 0.99 |
| | | PI | 0.83 | 0.83 | 0.83 | 0.83 | 0.83 | 0.88 | 0.88 | 0.88 | 0.88 | 0.88 | 0.93 | 0.93 | 0.93 | 0.93 | 0.93 | 0.99 | 0.99 | 0.99 | 0.99 | 0.99 |
| | 110°F(43.0°C) | TC | 7352 | 7362 | 7370 | 7370 | 7380 | 7795 | 7804 | 7812 | 7814 | 7823 | 8261 | 8272 | 8281 | 8282 | 8292 | 8759 | 8768 | 8778 | 8779 | 8790 |
| | | S/T | 0.57 | 0.67 | 0.76 | 0.76 | 0.86 | 0.60 | 0.71 | 0.80 | 0.80 | 0.91 | 0.64 | 0.75 | 0.85 | 0.85 | 0.97 | 0.68 | 0.79 | 0.90 | 0.90 | 1.00 |
| | | PI | 0.78 | 0.78 | 0.78 | 0.78 | 0.78 | 0.83 | 0.83 | 0.83 | 0.83 | 0.83 | 0.87 | 0.88 | 0.88 | 0.88 | 0.88 | 0.93 | 0.93 | 0.93 | 0.93 | 0.93 |
| | 115°F(46.0°C) | TC | 6654 | 6663 | 6670 | 6670 | 6679 | 7055 | 7063 | 7070 | 7071 | 7080 | 7476 | 7486 | 7494 | 7496 | 7504 | 7927 | 7935 | 7944 | 7945 | 7955 |
| | | S/T | 0.57 | 0.67 | 0.77 | 0.77 | 0.87 | 0.61 | 0.71 | 0.81 | 0.81 | 0.92 | 0.65 | 0.76 | 0.86 | 0.86 | 0.98 | 0.68 | 0.80 | 0.91 | 0.91 | 1.00 |
| | | PI | 0.79 | 0.79 | 0.79 | 0.79 | 0.79 | 0.84 | 0.84 | 0.84 | 0.84 | 0.84 | 0.89 | 0.89 | 0.89 | 0.89 | 0.89 | 0.94 | 0.94 | 0.94 | 0.94 | 0.94 |
| | 122°F(50.0°C) | TC | 5722 | 5730 | 5736 | 5737 | 5744 | 6067 | 6074 | 6080 | 6082 | 6089 | 6430 | 6438 | 6445 | 6446 | 6454 | 6817 | 6825 | 6832 | 6833 | 6842 |
| | | S/T | 0.59 | 0.69 | 0.78 | 0.78 | 0.89 | 0.62 | 0.73 | 0.83 | 0.83 | 0.95 | 0.66 | 0.77 | 0.88 | 0.88 | 1.00 | 0.70 | 0.82 | 0.93 | 0.93 | 1.00 |
| | | PI | 0.80 | 0.80 | 0.80 | 0.80 | 0.80 | 0.85 | 0.85 | 0.85 | 0.85 | 0.85 | 0.90 | 0.90 | 0.90 | 0.90 | 0.90 | 0.96 | 0.96 | 0.96 | 0.96 | 0.96 |

## LEGEND

TC: Total Cooling Capacity (BTU/hr)
S/T: Sensible Cooling Capacity Ratio
PI: Power Input (kW)

Manufacturer reserves the right to change, at any time, specifications and designs without notice and without obligations.

# Table 8: Cooling Performance 12K

| AIRFLOW (CFM) | OUTDOOR DB °F (°C) | ID WB°F (°C) | 60.8°F(16.0°C) | | | | | 64.4°F(18.0°C) | | | | | 67°F(19.4°C) | | | | | 71.6°F(22.0°C) | | | | |
|---|---|---|---|---|---|---|---|---|---|---|---|---|---|---|---|---|---|---|---|---|---|---|
| | | ID DB°F (°C) | 73.4°F (23.0°C) | 77.0°F (25.0°C) | 80.0°F (26.7°C) | 80.6°F (27.0°C) | 84.2°F (29.0°C) | 73.4°F (23.0°C) | 77.0°F (25.0°C) | 80.0°F 26.7°C) | 80.6°F (27.0°C) | 84.2°F (29.0°C) | 73.4°F (23.0°C) | 77.0°F (25.0°C) | 80.0°F (26.7°C) | 80.6°F (27.0°C) | 84.2°F (29.0°C) | 73.4°F (23.0°C) | 77.0°F( 25.0°C) | 80.0°F (26.7°C) | 80.6°F (27.0°C) | 84.2°F (29.0°C) |
| 194 | 5°F(-15.0°C) | TC | 10269 | 10283 | 10294 | 10294 | 10308 | 10888 | 10901 | 10912 | 10914 | 10927 | 11538 | 11553 | 11566 | 11568 | 11581 | 12234 | 12247 | 12260 | 12262 | 12278 |
| | | S/T | 0.45 | 0.53 | 0.61 | 0.61 | 0.69 | 0.48 | 0.56 | 0.64 | 0.64 | 0.73 | 0.51 | 0.60 | 0.68 | 0.68 | 0.78 | 0.54 | 0.63 | 0.72 | 0.72 | 0.82 |
| | | PI | 0.48 | 0.48 | 0.48 | 0.48 | 0.48 | 0.50 | 0.51 | 0.51 | 0.51 | 0.51 | 0.54 | 0.54 | 0.54 | 0.54 | 0.54 | 0.57 | 0.57 | 0.57 | 0.57 | 0.57 |
| | 14°F(-10.0°C) | TC | 10953 | 10967 | 10979 | 10980 | 10995 | 11613 | 11626 | 11638 | 11640 | 11654 | 12307 | 12323 | 12336 | 12339 | 12352 | 13048 | 13062 | 13076 | 13078 | 13095 |
| | | S/T | 0.45 | 0.53 | 0.61 | 0.61 | 0.69 | 0.48 | 0.57 | 0.64 | 0.64 | 0.73 | 0.51 | 0.60 | 0.68 | 0.68 | 0.78 | 0.54 | 0.64 | 0.72 | 0.72 | 0.82 |
| | | PI | 0.45 | 0.45 | 0.45 | 0.45 | 0.45 | 0.48 | 0.48 | 0.48 | 0.48 | 0.48 | 0.51 | 0.51 | 0.51 | 0.51 | 0.51 | 0.54 | 0.54 | 0.54 | 0.54 | 0.54 |
| | 17°F(-8.3°C) | TC | 11181 | 11196 | 11208 | 11208 | 11223 | 11854 | 11868 | 11880 | 11882 | 11897 | 12563 | 12579 | 12593 | 12595 | 12609 | 13319 | 13334 | 13348 | 13351 | 13367 |
| | | S/T | 0.46 | 0.54 | 0.61 | 0.61 | 0.69 | 0.48 | 0.57 | 0.64 | 0.64 | 0.74 | 0.51 | 0.60 | 0.68 | 0.68 | 0.78 | 0.54 | 0.64 | 0.72 | 0.72 | 0.83 |
| | | PI | 0.45 | 0.45 | 0.45 | 0.45 | 0.45 | 0.47 | 0.47 | 0.47 | 0.47 | 0.47 | 0.50 | 0.50 | 0.50 | 0.50 | 0.50 | 0.53 | 0.53 | 0.53 | 0.53 | 0.53 |
| | 23°F(-5.0°C) | TC | 11013 | 11027 | 11039 | 11040 | 11055 | 11676 | 11690 | 11702 | 11704 | 11718 | 12374 | 12390 | 12404 | 12406 | 12420 | 13119 | 13134 | 13148 | 13150 | 13166 |
| | | S/T | 0.46 | 0.54 | 0.61 | 0.61 | 0.70 | 0.49 | 0.57 | 0.65 | 0.65 | 0.74 | 0.52 | 0.60 | 0.69 | 0.69 | 0.78 | 0.55 | 0.64 | 0.73 | 0.73 | 0.83 |
| | | PI | 0.49 | 0.49 | 0.49 | 0.49 | 0.50 | 0.52 | 0.52 | 0.52 | 0.52 | 0.52 | 0.55 | 0.55 | 0.56 | 0.56 | 0.56 | 0.59 | 0.59 | 0.59 | 0.59 | 0.59 |
| | 35°F(1.7°C) | TC | 10677 | 10691 | 10703 | 10703 | 10717 | 11320 | 11334 | 11345 | 11347 | 11360 | 11996 | 12012 | 12025 | 12028 | 12041 | 12719 | 12733 | 12747 | 12749 | 12765 |
| | | S/T | 0.46 | 0.54 | 0.61 | 0.61 | 0.70 | 0.49 | 0.57 | 0.65 | 0.65 | 0.74 | 0.52 | 0.61 | 0.69 | 0.69 | 0.79 | 0.55 | 0.64 | 0.73 | 0.73 | 0.83 |
| | | PI | 0.59 | 0.59 | 0.59 | 0.59 | 0.59 | 0.62 | 0.63 | 0.63 | 0.63 | 0.63 | 0.66 | 0.66 | 0.66 | 0.66 | 0.66 | 0.70 | 0.70 | 0.70 | 0.70 | 0.70 |
| | 41°F(5.0°C) | TC | 10363 | 10376 | 10388 | 10388 | 10402 | 10987 | 11000 | 11011 | 11013 | 11026 | 11643 | 11659 | 11672 | 11674 | 11687 | 12345 | 12358 | 12372 | 12374 | 12389 |
| | | S/T | 0.46 | 0.54 | 0.62 | 0.62 | 0.70 | 0.49 | 0.57 | 0.65 | 0.65 | 0.74 | 0.52 | 0.61 | 0.69 | 0.69 | 0.79 | 0.55 | 0.65 | 0.73 | 0.73 | 0.84 |
| | | PI | 0.48 | 0.48 | 0.49 | 0.49 | 0.49 | 0.51 | 0.51 | 0.51 | 0.51 | 0.52 | 0.54 | 0.54 | 0.55 | 0.55 | 0.55 | 0.58 | 0.58 | 0.58 | 0.58 | 0.58 |
| | 47°F(8.3°C) | TC | 10048 | 10062 | 10073 | 10073 | 10087 | 10654 | 10667 | 10677 | 10679 | 10692 | 11290 | 11305 | 11318 | 11320 | 11332 | 11971 | 11984 | 11997 | 11999 | 12014 |
| | | S/T | 0.46 | 0.54 | 0.62 | 0.62 | 0.70 | 0.49 | 0.58 | 0.65 | 0.65 | 0.75 | 0.52 | 0.61 | 0.69 | 0.69 | 0.79 | 0.55 | 0.65 | 0.74 | 0.74 | 0.84 |
| | | PI | 0.38 | 0.38 | 0.38 | 0.38 | 0.38 | 0.40 | 0.40 | 0.40 | 0.40 | 0.40 | 0.43 | 0.43 | 0.43 | 0.43 | 0.43 | 0.45 | 0.45 | 0.45 | 0.45 | 0.45 |
| | 50°F(10.0°C) | TC | 10104 | 10117 | 10128 | 10129 | 10142 | 10713 | 10725 | 10736 | 10738 | 10751 | 11353 | 11367 | 11380 | 11382 | 11395 | 12037 | 12050 | 12063 | 12065 | 12080 |
| | | S/T | 0.47 | 0.55 | 0.62 | 0.62 | 0.71 | 0.49 | 0.58 | 0.66 | 0.66 | 0.75 | 0.52 | 0.61 | 0.70 | 0.70 | 0.79 | 0.55 | 0.65 | 0.74 | 0.74 | 0.84 |
| | | PI | 0.39 | 0.39 | 0.39 | 0.39 | 0.39 | 0.42 | 0.42 | 0.42 | 0.42 | 0.42 | 0.44 | 0.44 | 0.44 | 0.44 | 0.44 | 0.47 | 0.47 | 0.47 | 0.47 | 0.47 |
| | 59°F(15.0°C) | TC | 10270 | 10284 | 10295 | 10296 | 10309 | 10889 | 10902 | 10913 | 10915 | 10928 | 11540 | 11555 | 11568 | 11570 | 11583 | 12235 | 12248 | 12262 | 12264 | 12279 |
| | | S/T | 0.47 | 0.55 | 0.62 | 0.62 | 0.71 | 0.50 | 0.58 | 0.66 | 0.66 | 0.75 | 0.53 | 0.62 | 0.70 | 0.70 | 0.80 | 0.56 | 0.65 | 0.74 | 0.74 | 0.85 |
| | | PI | 0.43 | 0.43 | 0.43 | 0.43 | 0.44 | 0.46 | 0.46 | 0.46 | 0.46 | 0.46 | 0.49 | 0.49 | 0.49 | 0.49 | 0.49 | 0.52 | 0.52 | 0.52 | 0.52 | 0.52 |
| | 68°F(20.0°C) | TC | 10437 | 10451 | 10462 | 10462 | 10477 | 11066 | 11079 | 11090 | 11092 | 11105 | 11727 | 11742 | 11755 | 11757 | 11770 | 12433 | 12447 | 12460 | 12462 | 12478 |
| | | S/T | 0.48 | 0.56 | 0.64 | 0.64 | 0.73 | 0.51 | 0.60 | 0.68 | 0.68 | 0.77 | 0.54 | 0.63 | 0.72 | 0.72 | 0.82 | 0.57 | 0.67 | 0.76 | 0.76 | 0.87 |
| | | PI | 0.47 | 0.48 | 0.48 | 0.48 | 0.48 | 0.50 | 0.50 | 0.50 | 0.50 | 0.51 | 0.53 | 0.53 | 0.53 | 0.53 | 0.54 | 0.57 | 0.57 | 0.57 | 0.57 | 0.57 |
| | 77°F(25.0°C) | TC | 10603 | 10617 | 10629 | 10629 | 10644 | 11242 | 11255 | 11267 | 11269 | 11282 | 11914 | 11929 | 11943 | 11945 | 11958 | 12632 | 12645 | 12659 | 12661 | 12677 |
| | | S/T | 0.49 | 0.57 | 0.65 | 0.65 | 0.74 | 0.52 | 0.61 | 0.69 | 0.69 | 0.78 | 0.55 | 0.64 | 0.73 | 0.73 | 0.83 | 0.58 | 0.68 | 0.77 | 0.77 | 0.88 |
| | | PI | 0.52 | 0.52 | 0.52 | 0.52 | 0.52 | 0.55 | 0.55 | 0.55 | 0.55 | 0.55 | 0.58 | 0.58 | 0.58 | 0.58 | 0.58 | 0.61 | 0.61 | 0.62 | 0.62 | 0.62 |

Manufacturer reserves the right to change, at any time, specifications and designs without notice and without obligations.

# Table 8: Cooling Performance 12K (Continued)

| AIRFLOW (CFM) | OUTDOOR DB °F (°C) | ID WB°F (°C) | 60.8°F(16.0°C) | | | | | 64.4°F(18.0°C) | | | | | 67°F(19.4°C) | | | | | 71.6°F(22.0°C) | | | | |
|---|---|---|---|---|---|---|---|---|---|---|---|---|---|---|---|---|---|---|---|---|---|---|
| | | ID DB°F (°C) | 73.4°F (23.0°C) | 77.0°F (25.0°C) | 80.0°F (26.7°C) | 80.6°F (27.0°C) | 84.2°F (29.0°C) | 73.4°F (23.0°C) | 77.0°F (25.0°C) | 80.0°F 26.7°C) | 80.6°F (27.0°C) | 84.2°F (29.0°C) | 73.4°F (23.0°C) | 77.0°F (25.0°C) | 80.0°F (26.7°C) | 80.6°F (27.0°C) | 84.2°F (29.0°C) | 73.4°F (23.0°C) | 77.0°F( 25.0°C) | 80.0°F (26.7°C) | 80.6°F (27.0°C) | 84.2°F (29.0°C) |
| 194 | 82°F(27.8°C) | TC | 10599 | 10613 | 10625 | 10625 | 10640 | 11238 | 11251 | 11262 | 11264 | 11278 | 11909 | 11925 | 11938 | 11940 | 11954 | 12627 | 12641 | 12654 | 12656 | 12672 |
| | | S/T | 0.49 | 0.58 | 0.66 | 0.66 | 0.75 | 0.52 | 0.61 | 0.70 | 0.70 | 0.79 | 0.55 | 0.65 | 0.74 | 0.74 | 0.84 | 0.59 | 0.69 | 0.78 | 0.78 | 0.89 |
| | | PI | 0.57 | 0.58 | 0.58 | 0.58 | 0.58 | 0.61 | 0.61 | 0.61 | 0.61 | 0.61 | 0.65 | 0.65 | 0.65 | 0.65 | 0.65 | 0.68 | 0.69 | 0.69 | 0.69 | 0.69 |
| | 86°F(30.0°C) | TC | 10474 | 10488 | 10499 | 10500 | 10514 | 11105 | 11118 | 11129 | 11132 | 11145 | 11769 | 11784 | 11797 | 11799 | 11813 | 12478 | 12491 | 12505 | 12507 | 12523 |
| | | S/T | 0.50 | 0.59 | 0.67 | 0.67 | 0.76 | 0.53 | 0.62 | 0.71 | 0.71 | 0.80 | 0.56 | 0.66 | 0.75 | 0.75 | 0.85 | 0.59 | 0.70 | 0.79 | 0.79 | 0.90 |
| | | PI | 0.67 | 0.67 | 0.67 | 0.67 | 0.67 | 0.71 | 0.71 | 0.71 | 0.71 | 0.71 | 0.75 | 0.75 | 0.75 | 0.75 | 0.75 | 0.80 | 0.80 | 0.80 | 0.80 | 0.80 |
| | 95°F(35.0°C) | TC | 10193 | 10206 | 10217 | 10218 | 10232 | 10807 | 10820 | 10830 | 10833 | 10845 | 11453 | 11467 | 11480 | 11482 | 11495 | 12143 | 12156 | 12169 | 12171 | 12186 |
| | | S/T | 0.50 | 0.59 | 0.67 | 0.67 | 0.76 | 0.53 | 0.62 | 0.71 | 0.71 | 0.80 | 0.56 | 0.66 | 0.75 | 0.75 | 0.85 | 0.59 | 0.70 | 0.79 | 0.79 | 0.90 |
| | | PI | 0.88 | 0.88 | 0.88 | 0.88 | 0.88 | 0.93 | 0.93 | 0.93 | 0.93 | 0.93 | 0.99 | 0.99 | 0.99 | 0.99 | 0.99 | 1.05 | 1.05 | 1.05 | 1.05 | 1.05 |
| | 104°F(40.0°C) | TC | 8967 | 8979 | 8988 | 8989 | 9001 | 9507 | 9518 | 9528 | 9530 | 9541 | 10075 | 10088 | 10099 | 10101 | 10113 | 10682 | 10694 | 10705 | 10707 | 10720 |
| | | S/T | 0.51 | 0.60 | 0.68 | 0.68 | 0.78 | 0.54 | 0.64 | 0.72 | 0.72 | 0.82 | 0.57 | 0.67 | 0.77 | 0.77 | 0.87 | 0.61 | 0.71 | 0.81 | 0.81 | 0.93 |
| | | PI | 0.88 | 0.88 | 0.88 | 0.88 | 0.88 | 0.93 | 0.93 | 0.93 | 0.93 | 0.93 | 0.99 | 0.99 | 0.99 | 0.99 | 0.99 | 1.05 | 1.05 | 1.05 | 1.05 | 1.05 |
| | 110°F(43.0°C) | TC | 8231 | 8242 | 8251 | 8251 | 8263 | 8727 | 8738 | 8746 | 8748 | 8758 | 9249 | 9261 | 9271 | 9273 | 9283 | 9806 | 9816 | 9827 | 9829 | 9841 |
| | | S/T | 0.53 | 0.62 | 0.71 | 0.71 | 0.81 | 0.56 | 0.66 | 0.75 | 0.75 | 0.85 | 0.60 | 0.70 | 0.79 | 0.79 | 0.91 | 0.63 | 0.74 | 0.84 | 0.84 | 0.96 |
| | | PI | 0.88 | 0.88 | 0.88 | 0.88 | 0.88 | 0.93 | 0.93 | 0.93 | 0.93 | 0.93 | 0.99 | 0.99 | 0.99 | 0.99 | 0.99 | 1.05 | 1.05 | 1.05 | 1.05 | 1.05 |
| | 115°F(46.0°C) | TC | 7088 | 7098 | 7106 | 7106 | 7116 | 7516 | 7525 | 7532 | 7533 | 7542 | 7965 | 7975 | 7984 | 7985 | 7994 | 8445 | 8454 | 8463 | 8464 | 8475 |
| | | S/T | 0.54 | 0.63 | 0.72 | 0.72 | 0.82 | 0.57 | 0.67 | 0.76 | 0.76 | 0.86 | 0.60 | 0.71 | 0.80 | 0.80 | 0.92 | 0.64 | 0.75 | 0.85 | 0.85 | 0.97 |
| | | PI | 0.81 | 0.81 | 0.81 | 0.81 | 0.82 | 0.86 | 0.86 | 0.86 | 0.86 | 0.86 | 0.91 | 0.91 | 0.91 | 0.91 | 0.92 | 0.97 | 0.97 | 0.97 | 0.97 | 0.97 |
| | 122°F(50.0°C) | TC | 5565 | 5572 | 5578 | 5579 | 5586 | 5900 | 5907 | 5913 | 5914 | 5921 | 6253 | 6261 | 6268 | 6269 | 6276 | 6629 | 6637 | 6644 | 6645 | 6653 |
| | | S/T | 0.55 | 0.64 | 0.73 | 0.73 | 0.83 | 0.58 | 0.68 | 0.78 | 0.78 | 0.88 | 0.62 | 0.72 | 0.82 | 0.82 | 0.94 | 0.65 | 0.77 | 0.87 | 0.87 | 0.99 |
| | | PI | 0.72 | 0.73 | 0.73 | 0.73 | 0.73 | 0.77 | 0.77 | 0.77 | 0.77 | 0.77 | 0.81 | 0.82 | 0.82 | 0.82 | 0.82 | 0.86 | 0.86 | 0.87 | 0.87 | 0.87 |
| 232 | 5°F(-15.0°C) | TC | 10504 | 10518 | 10530 | 10530 | 10544 | 11137 | 11150 | 11161 | 11164 | 11177 | 11803 | 11818 | 11831 | 11833 | 11846 | 12514 | 12527 | 12541 | 12543 | 12558 |
| | | S/T | 0.46 | 0.54 | 0.62 | 0.62 | 0.71 | 0.49 | 0.58 | 0.66 | 0.66 | 0.75 | 0.52 | 0.61 | 0.70 | 0.70 | 0.79 | 0.55 | 0.65 | 0.74 | 0.74 | 0.84 |
| | | PI | 0.49 | 0.49 | 0.49 | 0.49 | 0.49 | 0.52 | 0.52 | 0.52 | 0.52 | 0.52 | 0.55 | 0.55 | 0.55 | 0.55 | 0.55 | 0.58 | 0.58 | 0.58 | 0.58 | 0.58 |
| | 14°F(-10.0°C) | TC | 11203 | 11218 | 11230 | 11231 | 11246 | 11879 | 11893 | 11904 | 11907 | 11921 | 12588 | 12605 | 12619 | 12621 | 12635 | 13347 | 13361 | 13376 | 13378 | 13394 |
| | | S/T | 0.47 | 0.55 | 0.62 | 0.62 | 0.71 | 0.49 | 0.58 | 0.66 | 0.66 | 0.75 | 0.52 | 0.61 | 0.70 | 0.70 | 0.79 | 0.55 | 0.65 | 0.74 | 0.74 | 0.84 |
| | | PI | 0.46 | 0.46 | 0.46 | 0.46 | 0.47 | 0.49 | 0.49 | 0.49 | 0.49 | 0.49 | 0.52 | 0.52 | 0.52 | 0.52 | 0.52 | 0.55 | 0.55 | 0.55 | 0.55 | 0.55 |
| | 17°F(-8.3°C) | TC | 11436 | 11452 | 11464 | 11465 | 11480 | 12126 | 12140 | 12152 | 12154 | 12169 | 12850 | 12867 | 12881 | 12883 | 12898 | 13624 | 13639 | 13654 | 13656 | 13673 |
| | | S/T | 0.47 | 0.55 | 0.62 | 0.62 | 0.71 | 0.49 | 0.58 | 0.66 | 0.66 | 0.75 | 0.52 | 0.62 | 0.70 | 0.70 | 0.80 | 0.56 | 0.65 | 0.74 | 0.74 | 0.84 |
| | | PI | 0.46 | 0.46 | 0.46 | 0.46 | 0.46 | 0.48 | 0.48 | 0.48 | 0.48 | 0.48 | 0.51 | 0.51 | 0.51 | 0.51 | 0.51 | 0.54 | 0.54 | 0.54 | 0.54 | 0.54 |
| | 23°F(-5.0°C) | TC | 11265 | 11280 | 11292 | 11292 | 11308 | 11943 | 11958 | 11969 | 11972 | 11986 | 12657 | 12673 | 12688 | 12690 | 12704 | 13420 | 13434 | 13449 | 13451 | 13468 |
| | | S/T | 0.47 | 0.55 | 0.63 | 0.63 | 0.71 | 0.50 | 0.58 | 0.66 | 0.66 | 0.76 | 0.53 | 0.62 | 0.70 | 0.70 | 0.80 | 0.56 | 0.66 | 0.74 | 0.74 | 0.85 |
| | | PI | 0.50 | 0.51 | 0.51 | 0.51 | 0.51 | 0.53 | 0.54 | 0.54 | 0.54 | 0.54 | 0.57 | 0.57 | 0.57 | 0.57 | 0.57 | 0.60 | 0.60 | 0.60 | 0.60 | 0.60 |

Manufacturer reserves the right to change, at any time, specifications and designs without notice and without obligations.

# Table 8: Cooling Performance 12K (Continued)

| AIRFLOW (CFM) | OUTDOOR DB °F (℃) | ID WB°F (℃) | 60.8°F(16.0℃) | | | | | 64.4°F(18.0℃) | | | | | 67°F(19.4℃) | | | | | 71.6°F(22.0℃) | | | | |
|---|---|---|---|---|---|---|---|---|---|---|---|---|---|---|---|---|---|---|---|---|---|---|
| | | ID DB°F (℃) | 73.4°F (23.0℃) | 77.0°F (25.0℃) | 80.0°F (26.7℃) | 80.6°F (27.0℃) | 84.2°F (29.0℃) | 73.4°F (23.0℃) | 77.0°F (25.0℃) | 80.0°F 26.7℃) | 80.6°F (27.0℃) | 84.2°F (29.0℃) | 73.4°F (23.0℃) | 77.0°F (25.0℃) | 80.0°F (26.7℃) | 80.6°F (27.0℃) | 84.2°F (29.0℃) | 73.4°F (23.0℃) | 77.0°F( 25.0℃) | 80.0°F (26.7℃) | 80.6°F (27.0℃) | 84.2°F (29.0℃) |
| 232 | 35°F(1.7℃) | TC | 10921 | 10936 | 10948 | 10948 | 10963 | 11579 | 11593 | 11604 | 11607 | 11620 | 12271 | 12287 | 12301 | 12303 | 12317 | 13010 | 13024 | 13039 | 13041 | 13057 |
| | | S/T | 0.47 | 0.55 | 0.63 | 0.63 | 0.72 | 0.50 | 0.59 | 0.67 | 0.67 | 0.76 | 0.53 | 0.62 | 0.71 | 0.71 | 0.80 | 0.56 | 0.66 | 0.75 | 0.75 | 0.85 |
| | | PI | 0.60 | 0.60 | 0.60 | 0.60 | 0.61 | 0.64 | 0.64 | 0.64 | 0.64 | 0.64 | 0.68 | 0.68 | 0.68 | 0.68 | 0.68 | 0.72 | 0.72 | 0.72 | 0.72 | 0.72 |
| | 41°F(5.0℃) | TC | 10600 | 10614 | 10625 | 10626 | 10640 | 11238 | 11252 | 11263 | 11265 | 11278 | 11910 | 11925 | 11939 | 11941 | 11954 | 12627 | 12641 | 12655 | 12657 | 12673 |
| | | S/T | 0.47 | 0.55 | 0.63 | 0.63 | 0.72 | 0.50 | 0.59 | 0.67 | 0.67 | 0.76 | 0.53 | 0.62 | 0.71 | 0.71 | 0.81 | 0.56 | 0.66 | 0.75 | 0.75 | 0.85 |
| | | PI | 0.50 | 0.50 | 0.50 | 0.50 | 0.50 | 0.53 | 0.53 | 0.53 | 0.53 | 0.53 | 0.56 | 0.56 | 0.56 | 0.56 | 0.56 | 0.59 | 0.59 | 0.59 | 0.59 | 0.59 |
| | 47°F(8.3℃) | TC | 10278 | 10292 | 10303 | 10304 | 10318 | 10898 | 10911 | 10921 | 10924 | 10937 | 11549 | 11564 | 11577 | 11579 | 11592 | 12245 | 12258 | 12271 | 12273 | 12288 |
| | | S/T | 0.47 | 0.56 | 0.63 | 0.63 | 0.72 | 0.50 | 0.59 | 0.67 | 0.67 | 0.76 | 0.53 | 0.62 | 0.71 | 0.71 | 0.81 | 0.56 | 0.66 | 0.75 | 0.75 | 0.86 |
| | | PI | 0.39 | 0.39 | 0.39 | 0.39 | 0.39 | 0.41 | 0.41 | 0.41 | 0.41 | 0.41 | 0.44 | 0.44 | 0.44 | 0.44 | 0.44 | 0.46 | 0.46 | 0.46 | 0.46 | 0.46 |
| | 50°F(10.0℃) | TC | 10335 | 10349 | 10360 | 10361 | 10375 | 10958 | 10971 | 10982 | 10984 | 10997 | 11613 | 11628 | 11641 | 11643 | 11656 | 12312 | 12326 | 12339 | 12341 | 12356 |
| | | S/T | 0.48 | 0.56 | 0.63 | 0.63 | 0.72 | 0.50 | 0.59 | 0.67 | 0.67 | 0.77 | 0.53 | 0.63 | 0.71 | 0.71 | 0.81 | 0.57 | 0.67 | 0.76 | 0.76 | 0.86 |
| | | PI | 0.40 | 0.40 | 0.40 | 0.40 | 0.40 | 0.43 | 0.43 | 0.43 | 0.43 | 0.43 | 0.45 | 0.45 | 0.45 | 0.45 | 0.45 | 0.48 | 0.48 | 0.48 | 0.48 | 0.48 |
| | 59°F(15.0℃) | TC | 10505 | 10519 | 10531 | 10531 | 10545 | 11138 | 11152 | 11163 | 11165 | 11178 | 11804 | 11819 | 11832 | 11835 | 11848 | 12515 | 12529 | 12542 | 12544 | 12560 |
| | | S/T | 0.48 | 0.56 | 0.64 | 0.64 | 0.73 | 0.51 | 0.60 | 0.68 | 0.68 | 0.77 | 0.54 | 0.63 | 0.72 | 0.72 | 0.82 | 0.57 | 0.67 | 0.76 | 0.76 | 0.87 |
| | | PI | 0.44 | 0.44 | 0.44 | 0.44 | 0.45 | 0.47 | 0.47 | 0.47 | 0.47 | 0.47 | 0.50 | 0.50 | 0.50 | 0.50 | 0.50 | 0.53 | 0.53 | 0.53 | 0.53 | 0.53 |
| | 68°F(20.0℃) | TC | 10676 | 10690 | 10701 | 10702 | 10716 | 11319 | 11332 | 11343 | 11346 | 11359 | 11995 | 12011 | 12024 | 12026 | 12040 | 12718 | 12732 | 12746 | 12748 | 12763 |
| | | S/T | 0.49 | 0.58 | 0.65 | 0.66 | 0.75 | 0.52 | 0.61 | 0.69 | 0.69 | 0.79 | 0.55 | 0.65 | 0.74 | 0.74 | 0.84 | 0.59 | 0.69 | 0.78 | 0.78 | 0.89 |
| | | PI | 0.49 | 0.49 | 0.49 | 0.49 | 0.49 | 0.51 | 0.52 | 0.52 | 0.52 | 0.52 | 0.55 | 0.55 | 0.55 | 0.55 | 0.55 | 0.58 | 0.58 | 0.58 | 0.58 | 0.58 |
| | 77°F(25.0℃) | TC | 10846 | 10860 | 10872 | 10873 | 10887 | 11499 | 11513 | 11524 | 11527 | 11540 | 12186 | 12202 | 12216 | 12218 | 12232 | 12921 | 12935 | 12949 | 12951 | 12967 |
| | | S/T | 0.50 | 0.58 | 0.66 | 0.66 | 0.76 | 0.53 | 0.62 | 0.70 | 0.70 | 0.80 | 0.56 | 0.66 | 0.75 | 0.75 | 0.85 | 0.59 | 0.70 | 0.79 | 0.79 | 0.90 |
| | | PI | 0.53 | 0.53 | 0.53 | 0.53 | 0.53 | 0.56 | 0.56 | 0.56 | 0.56 | 0.56 | 0.59 | 0.59 | 0.59 | 0.59 | 0.59 | 0.63 | 0.63 | 0.63 | 0.63 | 0.63 |
| | 82°F(27.8℃) | TC | 10842 | 10856 | 10868 | 10868 | 10883 | 11495 | 11509 | 11520 | 11522 | 11536 | 12182 | 12198 | 12211 | 12213 | 12227 | 12916 | 12930 | 12944 | 12946 | 12962 |
| | | S/T | 0.50 | 0.59 | 0.67 | 0.67 | 0.77 | 0.53 | 0.63 | 0.71 | 0.71 | 0.81 | 0.57 | 0.66 | 0.76 | 0.76 | 0.86 | 0.60 | 0.70 | 0.80 | 0.80 | 0.91 |
| | | PI | 0.59 | 0.59 | 0.59 | 0.59 | 0.59 | 0.62 | 0.62 | 0.62 | 0.62 | 0.63 | 0.66 | 0.66 | 0.66 | 0.66 | 0.66 | 0.70 | 0.70 | 0.70 | 0.70 | 0.70 |
| | 86°F(30.0℃) | TC | 10714 | 10728 | 10740 | 10740 | 10755 | 11359 | 11373 | 11384 | 11386 | 11400 | 12038 | 12054 | 12067 | 12069 | 12083 | 12763 | 12777 | 12791 | 12793 | 12809 |
| | | S/T | 0.51 | 0.60 | 0.68 | 0.68 | 0.78 | 0.54 | 0.63 | 0.72 | 0.72 | 0.82 | 0.57 | 0.67 | 0.76 | 0.76 | 0.87 | 0.61 | 0.71 | 0.81 | 0.81 | 0.92 |
| | | PI | 0.68 | 0.68 | 0.69 | 0.69 | 0.69 | 0.72 | 0.73 | 0.73 | 0.73 | 0.73 | 0.77 | 0.77 | 0.77 | 0.77 | 0.77 | 0.81 | 0.82 | 0.82 | 0.82 | 0.82 |
| | 95°F(35.0℃) | TC | 10426 | 10440 | 10451 | 10452 | 10466 | 11054 | 11067 | 11078 | 11080 | 11094 | 11715 | 11730 | 11743 | 11745 | 11758 | 12421 | 12434 | 12448 | 12450 | 12465 |
| | | S/T | 0.51 | 0.60 | 0.68 | 0.68 | 0.78 | 0.54 | 0.63 | 0.72 | 0.72 | 0.82 | 0.57 | 0.67 | 0.76 | 0.76 | 0.87 | 0.61 | 0.71 | 0.81 | 0.81 | 0.92 |
| | | PI | 0.90 | 0.90 | 0.90 | 0.90 | 0.90 | 0.95 | 0.95 | 0.95 | 0.96 | 0.96 | 1.01 | 1.01 | 1.01 | 1.01 | 1.01 | 1.07 | 1.07 | 1.07 | 1.07 | 1.07 |
| | 104°F(40.0℃) | TC | 9172 | 9184 | 9194 | 9195 | 9207 | 9725 | 9736 | 9746 | 9748 | 9759 | 10306 | 10319 | 10331 | 10332 | 10344 | 10927 | 10938 | 10950 | 10952 | 10966 |
| | | S/T | 0.52 | 0.61 | 0.70 | 0.70 | 0.80 | 0.55 | 0.65 | 0.74 | 0.74 | 0.84 | 0.59 | 0.69 | 0.78 | 0.78 | 0.89 | 0.62 | 0.73 | 0.83 | 0.83 | 0.95 |
| | | PI | 0.90 | 0.90 | 0.90 | 0.90 | 0.90 | 0.95 | 0.95 | 0.95 | 0.95 | 0.96 | 1.01 | 1.01 | 1.01 | 1.01 | 1.01 | 1.07 | 1.07 | 1.07 | 1.07 | 1.07 |

Manufacturer reserves the right to change, at any time, specifications and designs without notice and without obligations.

# Table 8: Cooling Performance 12K (Continued)

| AIRFLOW (CFM) | OUTDOOR DB °F (℃) | ID WB°F (℃) | 60.8°F(16.0℃) | | | | | 64.4°F(18.0℃) | | | | | 67°F(19.4℃) | | | | | 71.6°F(22.0℃) | | | | |
|---|---|---|---|---|---|---|---|---|---|---|---|---|---|---|---|---|---|---|---|---|---|---|
| | | ID DB°F (℃) | 73.4°F (23.0℃) | 77.0°F (25.0℃) | 80.0°F (26.7℃) | 80.6°F (27.0℃) | 84.2°F (29.0℃) | 73.4°F (23.0℃) | 77.0°F (25.0℃) | 80.0°F 26.7℃) | 80.6°F (27.0℃) | 84.2°F (29.0℃) | 73.4°F (23.0℃) | 77.0°F (25.0℃) | 80.0°F (26.7℃) | 80.6°F (27.0℃) | 84.2°F (29.0℃) | 73.4°F (23.0℃) | 77.0°F( 25.0℃) | 80.0°F (26.7℃) | 80.6°F (27.0℃) | 84.2°F (29.0℃) |
| 232 | 110°F(43.0℃) | TC | 8420 | 8431 | 8440 | 8440 | 8452 | 8927 | 8937 | 8946 | 8948 | 8959 | 9460 | 9473 | 9483 | 9485 | 9495 | 10030 | 10041 | 10052 | 10054 | 10066 |
| | | S/T | 0.54 | 0.64 | 0.72 | 0.72 | 0.82 | 0.57 | 0.67 | 0.77 | 0.77 | 0.87 | 0.61 | 0.71 | 0.81 | 0.81 | 0.93 | 0.65 | 0.76 | 0.86 | 0.86 | 0.98 |
| | | PI | 0.90 | 0.90 | 0.90 | 0.90 | 0.90 | 0.95 | 0.95 | 0.95 | 0.95 | 0.95 | 1.01 | 1.01 | 1.01 | 1.01 | 1.01 | 1.07 | 1.07 | 1.07 | 1.07 | 1.07 |
| | 115°F(46.0℃) | TC | 7251 | 7260 | 7268 | 7269 | 7278 | 7688 | 7697 | 7704 | 7706 | 7715 | 8147 | 8157 | 8167 | 8168 | 8177 | 8638 | 8647 | 8657 | 8658 | 8669 |
| | | S/T | 0.55 | 0.64 | 0.73 | 0.73 | 0.83 | 0.58 | 0.68 | 0.78 | 0.78 | 0.88 | 0.62 | 0.72 | 0.82 | 0.82 | 0.94 | 0.65 | 0.77 | 0.87 | 0.87 | 0.99 |
| | | PI | 0.83 | 0.83 | 0.83 | 0.83 | 0.83 | 0.88 | 0.88 | 0.88 | 0.88 | 0.88 | 0.93 | 0.93 | 0.94 | 0.94 | 0.94 | 0.99 | 0.99 | 0.99 | 0.99 | 0.99 |
| | 122°F(50.0℃) | TC | 5692 | 5700 | 5706 | 5706 | 5714 | 6035 | 6042 | 6048 | 6049 | 6057 | 6396 | 6404 | 6411 | 6412 | 6420 | 6781 | 6788 | 6796 | 6797 | 6805 |
| | | S/T | 0.56 | 0.66 | 0.75 | 0.75 | 0.85 | 0.60 | 0.70 | 0.79 | 0.79 | 0.90 | 0.63 | 0.74 | 0.84 | 0.84 | 0.96 | 0.67 | 0.78 | 0.89 | 0.89 | 1.00 |
| | | PI | 0.74 | 0.74 | 0.74 | 0.74 | 0.74 | 0.79 | 0.79 | 0.79 | 0.79 | 0.79 | 0.83 | 0.83 | 0.84 | 0.84 | 0.84 | 0.88 | 0.88 | 0.89 | 0.89 | 0.89 |
| 329 | 5°F(-15.0℃) | TC | 10745 | 10759 | 10771 | 10771 | 10786 | 11392 | 11406 | 11417 | 11419 | 11433 | 12073 | 12088 | 12102 | 12104 | 12118 | 12800 | 12814 | 12828 | 12830 | 12846 |
| | | S/T | 0.47 | 0.56 | 0.63 | 0.63 | 0.72 | 0.50 | 0.59 | 0.67 | 0.67 | 0.77 | 0.53 | 0.63 | 0.71 | 0.71 | 0.81 | 0.57 | 0.66 | 0.75 | 0.75 | 0.86 |
| | | PI | 0.50 | 0.50 | 0.50 | 0.50 | 0.50 | 0.53 | 0.53 | 0.53 | 0.53 | 0.53 | 0.56 | 0.56 | 0.56 | 0.56 | 0.56 | 0.59 | 0.59 | 0.59 | 0.59 | 0.60 |
| | 14°F(-10.0℃) | TC | 11460 | 11475 | 11487 | 11488 | 11504 | 12150 | 12165 | 12177 | 12179 | 12194 | 12876 | 12893 | 12907 | 12910 | 12924 | 13652 | 13667 | 13682 | 13684 | 13701 |
| | | S/T | 0.48 | 0.56 | 0.63 | 0.63 | 0.72 | 0.50 | 0.59 | 0.67 | 0.67 | 0.77 | 0.53 | 0.63 | 0.71 | 0.71 | 0.81 | 0.57 | 0.67 | 0.76 | 0.76 | 0.86 |
| | | PI | 0.47 | 0.47 | 0.48 | 0.48 | 0.48 | 0.50 | 0.50 | 0.50 | 0.50 | 0.50 | 0.53 | 0.53 | 0.53 | 0.53 | 0.53 | 0.56 | 0.57 | 0.57 | 0.57 | 0.57 |
| | 17°F(-8.3℃) | TC | 11698 | 11714 | 11726 | 11727 | 11743 | 12403 | 12418 | 12430 | 12433 | 12447 | 13144 | 13161 | 13176 | 13178 | 13193 | 13936 | 13951 | 13966 | 13969 | 13986 |
| | | S/T | 0.48 | 0.56 | 0.64 | 0.64 | 0.73 | 0.51 | 0.59 | 0.67 | 0.67 | 0.77 | 0.54 | 0.63 | 0.72 | 0.72 | 0.82 | 0.57 | 0.67 | 0.76 | 0.76 | 0.86 |
| | | PI | 0.47 | 0.47 | 0.47 | 0.47 | 0.47 | 0.49 | 0.49 | 0.49 | 0.50 | 0.50 | 0.52 | 0.52 | 0.52 | 0.52 | 0.53 | 0.55 | 0.56 | 0.56 | 0.56 | 0.56 |
| | 23°F(-5.0℃) | TC | 11522 | 11538 | 11550 | 11551 | 11566 | 12217 | 12231 | 12243 | 12246 | 12260 | 12947 | 12964 | 12978 | 12980 | 12995 | 13727 | 13742 | 13757 | 13759 | 13776 |
| | | S/T | 0.48 | 0.56 | 0.64 | 0.64 | 0.73 | 0.51 | 0.60 | 0.68 | 0.68 | 0.77 | 0.54 | 0.63 | 0.72 | 0.72 | 0.82 | 0.57 | 0.67 | 0.76 | 0.76 | 0.87 |
| | | PI | 0.52 | 0.52 | 0.52 | 0.52 | 0.52 | 0.55 | 0.55 | 0.55 | 0.55 | 0.55 | 0.58 | 0.58 | 0.58 | 0.58 | 0.58 | 0.61 | 0.62 | 0.62 | 0.62 | 0.62 |
| | 35°F(1.7℃) | TC | 11171 | 11186 | 11198 | 11199 | 11214 | 11844 | 11858 | 11870 | 11872 | 11886 | 12552 | 12568 | 12582 | 12584 | 12599 | 13308 | 13323 | 13337 | 13339 | 13356 |
| | | S/T | 0.48 | 0.57 | 0.64 | 0.64 | 0.73 | 0.51 | 0.60 | 0.68 | 0.68 | 0.78 | 0.54 | 0.64 | 0.72 | 0.72 | 0.82 | 0.57 | 0.67 | 0.77 | 0.77 | 0.87 |
| | | PI | 0.62 | 0.62 | 0.62 | 0.62 | 0.62 | 0.65 | 0.65 | 0.66 | 0.66 | 0.66 | 0.69 | 0.69 | 0.69 | 0.69 | 0.70 | 0.73 | 0.74 | 0.74 | 0.74 | 0.74 |
| | 41°F(5.0℃) | TC | 10842 | 10857 | 10869 | 10869 | 10884 | 11496 | 11509 | 11521 | 11523 | 11537 | 12182 | 12198 | 12212 | 12214 | 12228 | 12916 | 12931 | 12945 | 12947 | 12963 |
| | | S/T | 0.48 | 0.57 | 0.64 | 0.64 | 0.73 | 0.51 | 0.60 | 0.68 | 0.68 | 0.78 | 0.54 | 0.64 | 0.72 | 0.72 | 0.83 | 0.58 | 0.68 | 0.77 | 0.77 | 0.87 |
| | | PI | 0.51 | 0.51 | 0.51 | 0.51 | 0.51 | 0.54 | 0.54 | 0.54 | 0.54 | 0.54 | 0.57 | 0.57 | 0.57 | 0.57 | 0.57 | 0.60 | 0.60 | 0.60 | 0.60 | 0.61 |
| | 47°F(8.3℃) | TC | 10514 | 10528 | 10539 | 10539 | 10554 | 11147 | 11160 | 11171 | 11174 | 11187 | 11813 | 11828 | 11842 | 11844 | 11857 | 12525 | 12538 | 12552 | 12554 | 12570 |
| | | S/T | 0.48 | 0.57 | 0.65 | 0.65 | 0.74 | 0.51 | 0.60 | 0.68 | 0.68 | 0.78 | 0.54 | 0.64 | 0.73 | 0.73 | 0.83 | 0.58 | 0.68 | 0.77 | 0.77 | 0.88 |
| | | PI | 0.40 | 0.40 | 0.40 | 0.40 | 0.40 | 0.42 | 0.42 | 0.42 | 0.42 | 0.42 | 0.45 | 0.45 | 0.45 | 0.45 | 0.45 | 0.47 | 0.47 | 0.47 | 0.47 | 0.47 |
| | 50°F(10.0℃) | TC | 10572 | 10586 | 10597 | 10598 | 10612 | 11209 | 11222 | 11233 | 11235 | 11249 | 11878 | 11894 | 11907 | 11909 | 11922 | 12594 | 12608 | 12621 | 12623 | 12639 |
| | | S/T | 0.49 | 0.57 | 0.65 | 0.65 | 0.74 | 0.52 | 0.61 | 0.69 | 0.69 | 0.78 | 0.55 | 0.64 | 0.73 | 0.73 | 0.83 | 0.58 | 0.68 | 0.77 | 0.77 | 0.88 |
| | | PI | 0.41 | 0.41 | 0.41 | 0.41 | 0.41 | 0.44 | 0.44 | 0.44 | 0.44 | 0.44 | 0.46 | 0.46 | 0.46 | 0.46 | 0.46 | 0.49 | 0.49 | 0.49 | 0.49 | 0.49 |

Manufacturer reserves the right to change, at any time, specifications and designs without notice and without obligations.

# Table 8: Cooling Performance 12K (Continued)

| AIRFLOW (CFM) | OUTDOOR DB °F (℃) | ID WB°F (℃) | 60.8°F(16.0℃) | | | | | 64.4°F(18.0℃) | | | | | 67°F(19.4℃) | | | | | 71.6°F(22.0℃) | | | | |
|---|---|---|---|---|---|---|---|---|---|---|---|---|---|---|---|---|---|---|---|---|---|---|
| | | ID DB°F (℃) | 73.4°F (23.0℃) | 77.0°F (25.0℃) | 80.0°F (26.7℃) | 80.6°F (27.0℃) | 84.2°F (29.0℃) | 73.4°F (23.0℃) | 77.0°F (25.0℃) | 80.0°F 26.7℃) | 80.6°F (27.0℃) | 84.2°F (29.0℃) | 73.4°F (23.0℃) | 77.0°F (25.0℃) | 80.0°F (26.7℃) | 80.6°F (27.0℃) | 84.2°F (29.0℃) | 73.4°F (23.0℃) | 77.0°F( 25.0℃) | 80.0°F (26.7℃) | 80.6°F (27.0℃) | 84.2°F (29.0℃) |
| 329 | 59°F(15.0℃) | TC | 10746 | 10760 | 10772 | 10772 | 10787 | 11393 | 11407 | 11418 | 11420 | 11434 | 12074 | 12090 | 12103 | 12105 | 12119 | 12801 | 12815 | 12829 | 12831 | 12847 |
| | | S/T | 0.49 | 0.57 | 0.65 | 0.65 | 0.74 | 0.52 | 0.61 | 0.69 | 0.69 | 0.79 | 0.55 | 0.65 | 0.73 | 0.73 | 0.84 | 0.58 | 0.68 | 0.78 | 0.78 | 0.89 |
| | | PI | 0.45 | 0.45 | 0.45 | 0.45 | 0.46 | 0.48 | 0.48 | 0.48 | 0.48 | 0.48 | 0.51 | 0.51 | 0.51 | 0.51 | 0.51 | 0.54 | 0.54 | 0.54 | 0.54 | 0.54 |
| | 68°F(20.0℃) | TC | 10920 | 10935 | 10946 | 10947 | 10962 | 11578 | 11592 | 11603 | 11605 | 11619 | 12270 | 12286 | 12299 | 12302 | 12315 | 13009 | 13023 | 13037 | 13039 | 13056 |
| | | S/T | 0.50 | 0.59 | 0.67 | 0.67 | 0.76 | 0.53 | 0.62 | 0.71 | 0.71 | 0.81 | 0.56 | 0.66 | 0.75 | 0.75 | 0.86 | 0.60 | 0.70 | 0.80 | 0.80 | 0.91 |
| | | PI | 0.50 | 0.50 | 0.50 | 0.50 | 0.50 | 0.53 | 0.53 | 0.53 | 0.53 | 0.53 | 0.56 | 0.56 | 0.56 | 0.56 | 0.56 | 0.59 | 0.59 | 0.59 | 0.59 | 0.59 |
| | 77°F(25.0℃) | TC | 11094 | 11109 | 11121 | 11121 | 11136 | 11763 | 11777 | 11788 | 11790 | 11804 | 12465 | 12482 | 12495 | 12498 | 12512 | 13216 | 13231 | 13245 | 13247 | 13264 |
| | | S/T | 0.51 | 0.60 | 0.68 | 0.68 | 0.77 | 0.54 | 0.63 | 0.72 | 0.72 | 0.82 | 0.57 | 0.67 | 0.76 | 0.76 | 0.87 | 0.61 | 0.71 | 0.81 | 0.81 | 0.92 |
| | | PI | 0.54 | 0.54 | 0.54 | 0.54 | 0.54 | 0.57 | 0.57 | 0.57 | 0.57 | 0.57 | 0.61 | 0.61 | 0.61 | 0.61 | 0.61 | 0.64 | 0.64 | 0.64 | 0.64 | 0.64 |
| | 82°F(27.8℃) | TC | 11090 | 11105 | 11117 | 11117 | 11132 | 11758 | 11772 | 11784 | 11786 | 11800 | 12461 | 12477 | 12491 | 12493 | 12507 | 13211 | 13226 | 13240 | 13242 | 13259 |
| | | S/T | 0.52 | 0.60 | 0.69 | 0.69 | 0.78 | 0.55 | 0.64 | 0.73 | 0.73 | 0.83 | 0.58 | 0.68 | 0.77 | 0.77 | 0.88 | 0.61 | 0.72 | 0.82 | 0.82 | 0.93 |
| | | PI | 0.60 | 0.60 | 0.60 | 0.60 | 0.60 | 0.64 | 0.64 | 0.64 | 0.64 | 0.64 | 0.68 | 0.68 | 0.68 | 0.68 | 0.68 | 0.72 | 0.72 | 0.72 | 0.72 | 0.72 |
| | 86°F(30.0℃) | TC | 10959 | 10974 | 10985 | 10986 | 11001 | 11619 | 11633 | 11645 | 11647 | 11661 | 12314 | 12330 | 12343 | 12346 | 12359 | 13055 | 13070 | 13084 | 13086 | 13102 |
| | | S/T | 0.52 | 0.61 | 0.70 | 0.70 | 0.79 | 0.55 | 0.65 | 0.74 | 0.74 | 0.84 | 0.59 | 0.69 | 0.78 | 0.78 | 0.89 | 0.62 | 0.73 | 0.83 | 0.83 | 0.95 |
| | | PI | 0.70 | 0.70 | 0.70 | 0.70 | 0.70 | 0.74 | 0.74 | 0.74 | 0.74 | 0.74 | 0.79 | 0.79 | 0.79 | 0.79 | 0.79 | 0.83 | 0.83 | 0.83 | 0.83 | 0.84 |
| | 95°F(35.0℃) | TC | 10665 | 10679 | 10690 | 10691 | 10705 | 11307 | 11321 | 11332 | 11334 | 11348 | 11983 | 11998 | 12012 | 12014 | 12027 | 12705 | 12719 | 12732 | 12734 | 12750 |
| | | S/T | 0.52 | 0.61 | 0.70 | 0.70 | 0.79 | 0.55 | 0.65 | 0.74 | 0.74 | 0.84 | 0.59 | 0.69 | 0.78 | 0.78 | 0.89 | 0.62 | 0.73 | 0.83 | 0.83 | 0.95 |
| | | PI | 0.92 | 0.92 | 0.92 | 0.92 | 0.92 | 0.97 | 0.98 | 0.98 | 0.98 | 0.98 | 1.03 | 1.03 | 1.04 | 1.04 | 1.04 | 1.10 | 1.10 | 1.10 | 1.10 | 1.10 |
| | 104°F(40.0℃) | TC | 9382 | 9394 | 9405 | 9405 | 9418 | 9947 | 9959 | 9969 | 9971 | 9983 | 10542 | 10555 | 10567 | 10569 | 10581 | 11177 | 11189 | 11201 | 11203 | 11217 |
| | | S/T | 0.54 | 0.63 | 0.71 | 0.71 | 0.81 | 0.57 | 0.67 | 0.76 | 0.76 | 0.86 | 0.60 | 0.71 | 0.80 | 0.80 | 0.91 | 0.64 | 0.75 | 0.85 | 0.85 | 0.97 |
| | | PI | 0.92 | 0.92 | 0.92 | 0.92 | 0.92 | 0.97 | 0.97 | 0.98 | 0.98 | 0.98 | 1.03 | 1.03 | 1.03 | 1.03 | 1.04 | 1.09 | 1.10 | 1.10 | 1.10 | 1.10 |
| | 110°F(43.0℃) | TC | 8612 | 8624 | 8633 | 8633 | 8645 | 9131 | 9142 | 9151 | 9153 | 9164 | 9677 | 9689 | 9700 | 9702 | 9713 | 10260 | 10271 | 10282 | 10284 | 10297 |
| | | S/T | 0.55 | 0.65 | 0.74 | 0.74 | 0.84 | 0.59 | 0.69 | 0.78 | 0.78 | 0.89 | 0.62 | 0.73 | 0.83 | 0.83 | 0.95 | 0.66 | 0.78 | 0.88 | 0.88 | 1.00 |
| | | PI | 0.92 | 0.92 | 0.92 | 0.92 | 0.92 | 0.97 | 0.97 | 0.98 | 0.98 | 0.98 | 1.03 | 1.03 | 1.03 | 1.03 | 1.04 | 1.09 | 1.09 | 1.10 | 1.10 | 1.10 |
| | 115°F(46.0℃) | TC | 7417 | 7427 | 7435 | 7435 | 7445 | 7864 | 7873 | 7881 | 7882 | 7892 | 8333 | 8344 | 8353 | 8355 | 8364 | 8835 | 8845 | 8855 | 8856 | 8867 |
| | | S/T | 0.56 | 0.66 | 0.75 | 0.75 | 0.85 | 0.59 | 0.70 | 0.79 | 0.79 | 0.90 | 0.63 | 0.74 | 0.84 | 0.84 | 0.96 | 0.67 | 0.78 | 0.89 | 0.89 | 1.00 |
| | | PI | 0.85 | 0.85 | 0.85 | 0.85 | 0.85 | 0.90 | 0.90 | 0.90 | 0.90 | 0.90 | 0.95 | 0.96 | 0.96 | 0.96 | 0.96 | 1.01 | 1.01 | 1.01 | 1.01 | 1.02 |
| | 122°F(50.0℃) | TC | 5822 | 5830 | 5837 | 5837 | 5845 | 6173 | 6181 | 6187 | 6188 | 6195 | 6542 | 6551 | 6558 | 6559 | 6566 | 6936 | 6944 | 6951 | 6952 | 6961 |
| | | S/T | 0.57 | 0.67 | 0.77 | 0.77 | 0.87 | 0.61 | 0.71 | 0.81 | 0.81 | 0.93 | 0.65 | 0.76 | 0.86 | 0.86 | 0.98 | 0.68 | 0.80 | 0.91 | 0.91 | 1.00 |
| | | PI | 0.76 | 0.76 | 0.76 | 0.76 | 0.76 | 0.80 | 0.81 | 0.81 | 0.81 | 0.81 | 0.85 | 0.85 | 0.85 | 0.85 | 0.86 | 0.90 | 0.90 | 0.91 | 0.91 | 0.91 |
| 347 | 5°F(-15.0℃) | TC | 10990 | 11005 | 11017 | 11018 | 11032 | 11653 | 11667 | 11678 | 11680 | 11694 | 12349 | 12365 | 12379 | 12381 | 12395 | 13093 | 13107 | 13121 | 13124 | 13140 |
| | | S/T | 0.49 | 0.57 | 0.65 | 0.65 | 0.74 | 0.51 | 0.60 | 0.69 | 0.69 | 0.78 | 0.55 | 0.64 | 0.73 | 0.73 | 0.83 | 0.58 | 0.68 | 0.77 | 0.77 | 0.88 |
| | | PI | 0.51 | 0.51 | 0.51 | 0.51 | 0.51 | 0.54 | 0.54 | 0.54 | 0.54 | 0.54 | 0.57 | 0.57 | 0.57 | 0.57 | 0.57 | 0.61 | 0.61 | 0.61 | 0.61 | 0.61 |

Manufacturer reserves the right to change, at any time, specifications and designs without notice and without obligations.

# Table 8: Cooling Performance 12K (Continued)

| AIRFLOW (CFM) | OUTDOOR DB °F (℃) | ID WB°F (℃) | 60.8°F(16.0℃) | | | | | 64.4°F(18.0℃) | | | | | 67°F(19.4℃) | | | | | 71.6°F(22.0℃) | | | | |
|---|---|---|---|---|---|---|---|---|---|---|---|---|---|---|---|---|---|---|---|---|---|---|
| | | ID DB°F (℃) | 73.4°F (23.0℃) | 77.0°F (25.0℃) | 80.0°F (26.7℃) | 80.6°F (27.0℃) | 84.2°F (29.0℃) | 73.4°F (23.0℃) | 77.0°F (25.0℃) | 80.0°F 26.7℃) | 80.6°F (27.0℃) | 84.2°F (29.0℃) | 73.4°F (23.0℃) | 77.0°F (25.0℃) | 80.0°F (26.7℃) | 80.6°F (27.0℃) | 84.2°F (29.0℃) | 73.4°F (23.0℃) | 77.0°F( 25.0℃) | 80.0°F (26.7℃) | 80.6°F (27.0℃) | 84.2°F (29.0℃) |
| 347 | 14°F(-10.0℃) | TC | 11722 | 11738 | 11750 | 11751 | 11767 | 12428 | 12443 | 12455 | 12458 | 12473 | 13171 | 13188 | 13203 | 13205 | 13220 | 13965 | 13980 | 13995 | 13997 | 14015 |
| | | S/T | 0.49 | 0.57 | 0.65 | 0.65 | 0.74 | 0.52 | 0.61 | 0.69 | 0.69 | 0.78 | 0.55 | 0.64 | 0.73 | 0.73 | 0.83 | 0.58 | 0.68 | 0.77 | 0.77 | 0.88 |
| | | PI | 0.48 | 0.49 | 0.49 | 0.49 | 0.49 | 0.51 | 0.51 | 0.52 | 0.52 | 0.52 | 0.54 | 0.55 | 0.55 | 0.55 | 0.55 | 0.58 | 0.58 | 0.58 | 0.58 | 0.58 |
| | 17°F(-8.3℃) | TC | 11966 | 11982 | 11995 | 11995 | 12012 | 12687 | 12702 | 12715 | 12717 | 12732 | 13445 | 13462 | 13477 | 13480 | 13495 | 14255 | 14271 | 14286 | 14288 | 14306 |
| | | S/T | 0.49 | 0.57 | 0.65 | 0.65 | 0.74 | 0.52 | 0.61 | 0.69 | 0.69 | 0.79 | 0.55 | 0.64 | 0.73 | 0.73 | 0.83 | 0.58 | 0.68 | 0.78 | 0.78 | 0.88 |
| | | PI | 0.48 | 0.48 | 0.48 | 0.48 | 0.48 | 0.51 | 0.51 | 0.51 | 0.51 | 0.51 | 0.54 | 0.54 | 0.54 | 0.54 | 0.54 | 0.57 | 0.57 | 0.57 | 0.57 | 0.57 |
| | 23°F(-5.0℃) | TC | 11786 | 11802 | 11815 | 11815 | 11831 | 12496 | 12511 | 12524 | 12526 | 12541 | 13243 | 13260 | 13275 | 13277 | 13292 | 14041 | 14056 | 14071 | 14074 | 14091 |
| | | S/T | 0.49 | 0.58 | 0.65 | 0.65 | 0.75 | 0.52 | 0.61 | 0.69 | 0.69 | 0.79 | 0.55 | 0.65 | 0.74 | 0.74 | 0.84 | 0.58 | 0.69 | 0.78 | 0.78 | 0.89 |
| | | PI | 0.53 | 0.53 | 0.53 | 0.53 | 0.53 | 0.56 | 0.56 | 0.56 | 0.56 | 0.56 | 0.59 | 0.59 | 0.59 | 0.59 | 0.60 | 0.63 | 0.63 | 0.63 | 0.63 | 0.63 |
| | 35°F(1.7℃) | TC | 11427 | 11442 | 11454 | 11455 | 11470 | 12115 | 12130 | 12142 | 12144 | 12158 | 12839 | 12856 | 12870 | 12872 | 12887 | 13613 | 13627 | 13642 | 13644 | 13661 |
| | | S/T | 0.49 | 0.58 | 0.66 | 0.66 | 0.75 | 0.52 | 0.61 | 0.70 | 0.70 | 0.79 | 0.55 | 0.65 | 0.74 | 0.74 | 0.84 | 0.59 | 0.69 | 0.78 | 0.78 | 0.89 |
| | | PI | 0.63 | 0.63 | 0.63 | 0.63 | 0.63 | 0.67 | 0.67 | 0.67 | 0.67 | 0.67 | 0.71 | 0.71 | 0.71 | 0.71 | 0.71 | 0.75 | 0.75 | 0.75 | 0.75 | 0.75 |
| | 41°F(5.0℃) | TC | 11090 | 11105 | 11117 | 11118 | 11133 | 11759 | 11773 | 11784 | 11787 | 11801 | 12461 | 12477 | 12491 | 12494 | 12508 | 13212 | 13226 | 13241 | 13243 | 13259 |
| | | S/T | 0.49 | 0.58 | 0.66 | 0.66 | 0.75 | 0.52 | 0.61 | 0.70 | 0.70 | 0.80 | 0.56 | 0.65 | 0.74 | 0.74 | 0.84 | 0.59 | 0.69 | 0.78 | 0.78 | 0.89 |
| | | PI | 0.52 | 0.52 | 0.52 | 0.52 | 0.52 | 0.55 | 0.55 | 0.55 | 0.55 | 0.55 | 0.58 | 0.58 | 0.58 | 0.58 | 0.58 | 0.62 | 0.62 | 0.62 | 0.62 | 0.62 |
| | 47°F(8.3℃) | TC | 10754 | 10769 | 10780 | 10781 | 10795 | 11402 | 11416 | 11427 | 11429 | 11443 | 12083 | 12099 | 12113 | 12115 | 12128 | 12811 | 12825 | 12839 | 12841 | 12857 |
| | | S/T | 0.50 | 0.58 | 0.66 | 0.66 | 0.75 | 0.53 | 0.62 | 0.70 | 0.70 | 0.80 | 0.56 | 0.65 | 0.74 | 0.74 | 0.85 | 0.59 | 0.69 | 0.79 | 0.79 | 0.90 |
| | | PI | 0.41 | 0.41 | 0.41 | 0.41 | 0.41 | 0.43 | 0.43 | 0.43 | 0.43 | 0.43 | 0.46 | 0.46 | 0.46 | 0.46 | 0.46 | 0.48 | 0.48 | 0.48 | 0.48 | 0.48 |
| | 50°F(10.0℃) | TC | 10813 | 10828 | 10840 | 10840 | 10855 | 11465 | 11479 | 11490 | 11492 | 11506 | 12150 | 12166 | 12179 | 12182 | 12195 | 12882 | 12896 | 12910 | 12912 | 12928 |
| | | S/T | 0.50 | 0.58 | 0.66 | 0.66 | 0.76 | 0.53 | 0.62 | 0.70 | 0.70 | 0.80 | 0.56 | 0.66 | 0.75 | 0.75 | 0.85 | 0.59 | 0.70 | 0.79 | 0.79 | 0.90 |
| | | PI | 0.42 | 0.42 | 0.42 | 0.42 | 0.42 | 0.45 | 0.45 | 0.45 | 0.45 | 0.45 | 0.47 | 0.47 | 0.47 | 0.47 | 0.47 | 0.50 | 0.50 | 0.50 | 0.50 | 0.50 |
| | 59°F(15.0℃) | TC | 10992 | 11006 | 11018 | 11019 | 11034 | 11654 | 11668 | 11679 | 11682 | 11696 | 12350 | 12366 | 12380 | 12382 | 12396 | 13094 | 13109 | 13123 | 13125 | 13141 |
| | | S/T | 0.50 | 0.59 | 0.67 | 0.67 | 0.76 | 0.53 | 0.62 | 0.71 | 0.71 | 0.81 | 0.56 | 0.66 | 0.75 | 0.75 | 0.86 | 0.60 | 0.70 | 0.80 | 0.80 | 0.91 |
| | | PI | 0.46 | 0.46 | 0.47 | 0.47 | 0.47 | 0.49 | 0.49 | 0.49 | 0.49 | 0.49 | 0.52 | 0.52 | 0.52 | 0.52 | 0.52 | 0.55 | 0.55 | 0.55 | 0.55 | 0.55 |
| | 68°F(20.0℃) | TC | 11170 | 11185 | 11197 | 11197 | 11212 | 11843 | 11857 | 11869 | 11871 | 11885 | 12550 | 12567 | 12581 | 12583 | 12597 | 13307 | 13321 | 13336 | 13338 | 13354 |
| | | S/T | 0.51 | 0.60 | 0.69 | 0.69 | 0.78 | 0.54 | 0.64 | 0.73 | 0.73 | 0.83 | 0.58 | 0.68 | 0.77 | 0.77 | 0.88 | 0.61 | 0.72 | 0.82 | 0.82 | 0.93 |
| | | PI | 0.51 | 0.51 | 0.51 | 0.51 | 0.51 | 0.54 | 0.54 | 0.54 | 0.54 | 0.54 | 0.57 | 0.57 | 0.57 | 0.57 | 0.57 | 0.61 | 0.61 | 0.61 | 0.61 | 0.61 |
| | 77°F(25.0℃) | TC | 11348 | 11363 | 11375 | 11376 | 11391 | 12032 | 12046 | 12058 | 12060 | 12075 | 12751 | 12767 | 12781 | 12784 | 12798 | 13519 | 13534 | 13548 | 13550 | 13567 |
| | | S/T | 0.52 | 0.61 | 0.69 | 0.69 | 0.79 | 0.55 | 0.65 | 0.74 | 0.74 | 0.84 | 0.59 | 0.69 | 0.78 | 0.78 | 0.89 | 0.62 | 0.73 | 0.83 | 0.83 | 0.94 |
| | | PI | 0.55 | 0.55 | 0.55 | 0.55 | 0.55 | 0.59 | 0.59 | 0.59 | 0.59 | 0.59 | 0.62 | 0.62 | 0.62 | 0.62 | 0.62 | 0.66 | 0.66 | 0.66 | 0.66 | 0.66 |
| | 82°F(27.8℃) | TC | 11344 | 11359 | 11371 | 11372 | 11387 | 12027 | 12041 | 12053 | 12056 | 12070 | 12746 | 12762 | 12776 | 12779 | 12793 | 13514 | 13528 | 13543 | 13545 | 13562 |
| | | S/T | 0.53 | 0.62 | 0.70 | 0.70 | 0.80 | 0.56 | 0.66 | 0.75 | 0.75 | 0.85 | 0.59 | 0.70 | 0.79 | 0.79 | 0.90 | 0.63 | 0.74 | 0.84 | 0.84 | 0.95 |
| | | PI | 0.62 | 0.62 | 0.62 | 0.62 | 0.62 | 0.65 | 0.65 | 0.65 | 0.65 | 0.65 | 0.69 | 0.69 | 0.69 | 0.69 | 0.69 | 0.73 | 0.73 | 0.73 | 0.73 | 0.74 |

Manufacturer reserves the right to change, at any time, specifications and designs without notice and without obligations.

# Table 8: Cooling Performance 12K (Continued)

| AIRFLOW (CFM) | OUTDOOR DB °F (℃) | ID WB°F (℃) | 60.8°F(16.0℃) | | | | | 64.4°F(18.0℃) | | | | | 67°F(19.4℃) | | | | | 71.6°F(22.0℃) | | | | |
|---|---|---|---|---|---|---|---|---|---|---|---|---|---|---|---|---|---|---|---|---|---|---|
| | | ID DB°F (℃) | 73.4°F (23.0℃) | 77.0°F (25.0℃) | 80.0°F (26.7℃) | 80.6°F (27.0℃) | 84.2°F (29.0℃) | 73.4°F (23.0℃) | 77.0°F (25.0℃) | 80.0°F 26.7℃) | 80.6°F (27.0℃) | 84.2°F (29.0℃) | 73.4°F (23.0℃) | 77.0°F (25.0℃) | 80.0°F (26.7℃) | 80.6°F (27.0℃) | 84.2°F (29.0℃) | 73.4°F (23.0℃) | 77.0°F( 25.0℃) | 80.0°F (26.7℃) | 80.6°F (27.0℃) | 84.2°F (29.0℃) |
| 347 | 86°F(30.0℃) | TC | 11210 | 11225 | 11237 | 11237 | 11253 | 11885 | 11899 | 11911 | 11913 | 11928 | 12595 | 12612 | 12626 | 12628 | 12642 | 13354 | 13369 | 13383 | 13385 | 13402 |
| | | S/T | 0.53 | 0.63 | 0.71 | 0.71 | 0.81 | 0.57 | 0.66 | 0.75 | 0.75 | 0.86 | 0.60 | 0.70 | 0.80 | 0.80 | 0.91 | 0.64 | 0.75 | 0.85 | 0.85 | 0.97 |
| | | PI | 0.72 | 0.72 | 0.72 | 0.72 | 0.72 | 0.76 | 0.76 | 0.76 | 0.76 | 0.76 | 0.80 | 0.80 | 0.81 | 0.81 | 0.81 | 0.85 | 0.85 | 0.85 | 0.85 | 0.86 |
| | 95°F(35.0℃) | TC | 10909 | 10923 | 10935 | 10936 | 10950 | 11566 | 11580 | 11591 | 11593 | 11607 | 12257 | 12273 | 12287 | 12289 | 12303 | 12996 | 13010 | 13024 | 13026 | 13042 |
| | | S/T | 0.53 | 0.63 | 0.71 | 0.71 | 0.81 | 0.57 | 0.66 | 0.75 | 0.75 | 0.86 | 0.60 | 0.70 | 0.80 | 0.80 | 0.91 | 0.64 | 0.75 | 0.85 | 0.85 | 0.97 |
| | | PI | 0.94 | 0.94 | 0.94 | 0.94 | 0.94 | 1.00 | 1.00 | 1.00 | 1.00 | 1.00 | 1.06 | 1.06 | 1.06 | 1.06 | 1.06 | 1.12 | 1.12 | 1.12 | 1.12 | 1.12 |
| | 104°F(40.0℃) | TC | 9597 | 9609 | 9620 | 9620 | 9633 | 10175 | 10187 | 10197 | 10199 | 10211 | 10783 | 10797 | 10809 | 10811 | 10823 | 11432 | 11445 | 11457 | 11459 | 11473 |
| | | S/T | 0.55 | 0.64 | 0.73 | 0.73 | 0.83 | 0.58 | 0.68 | 0.77 | 0.77 | 0.88 | 0.62 | 0.72 | 0.82 | 0.82 | 0.93 | 0.65 | 0.76 | 0.87 | 0.87 | 0.99 |
| | | PI | 0.94 | 0.94 | 0.94 | 0.94 | 0.94 | 1.00 | 1.00 | 1.00 | 1.00 | 1.00 | 1.06 | 1.06 | 1.06 | 1.06 | 1.06 | 1.12 | 1.12 | 1.12 | 1.12 | 1.12 |
| | 110°F(43.0℃) | TC | 8809 | 8821 | 8831 | 8831 | 8843 | 9340 | 9351 | 9360 | 9362 | 9373 | 9898 | 9911 | 9922 | 9924 | 9935 | 10495 | 10506 | 10517 | 10519 | 10532 |
| | | S/T | 0.57 | 0.67 | 0.76 | 0.76 | 0.86 | 0.60 | 0.71 | 0.80 | 0.80 | 0.91 | 0.64 | 0.75 | 0.85 | 0.85 | 0.97 | 0.68 | 0.79 | 0.90 | 0.90 | 1.00 |
| | | PI | 0.94 | 0.94 | 0.94 | 0.94 | 0.94 | 1.00 | 1.00 | 1.00 | 1.00 | 1.00 | 1.05 | 1.06 | 1.06 | 1.06 | 1.06 | 1.12 | 1.12 | 1.12 | 1.12 | 1.12 |
| | 115°F(46.0℃) | TC | 7586 | 7597 | 7605 | 7605 | 7615 | 8043 | 8053 | 8061 | 8063 | 8072 | 8524 | 8535 | 8545 | 8546 | 8556 | 9038 | 9047 | 9057 | 9059 | 9070 |
| | | S/T | 0.57 | 0.67 | 0.77 | 0.77 | 0.87 | 0.61 | 0.71 | 0.81 | 0.81 | 0.92 | 0.65 | 0.76 | 0.86 | 0.86 | 0.98 | 0.68 | 0.80 | 0.91 | 0.91 | 1.00 |
| | | PI | 0.87 | 0.87 | 0.87 | 0.87 | 0.87 | 0.92 | 0.92 | 0.92 | 0.92 | 0.92 | 0.98 | 0.98 | 0.98 | 0.98 | 0.98 | 1.04 | 1.04 | 1.04 | 1.04 | 1.04 |
| | 122°F(50.0℃) | TC | 5956 | 5964 | 5970 | 5970 | 5978 | 6315 | 6322 | 6328 | 6330 | 6337 | 6692 | 6701 | 6708 | 6709 | 6717 | 7095 | 7103 | 7110 | 7112 | 7120 |
| | | S/T | 0.59 | 0.69 | 0.78 | 0.78 | 0.89 | 0.62 | 0.73 | 0.83 | 0.83 | 0.95 | 0.66 | 0.77 | 0.88 | 0.88 | 1.00 | 0.70 | 0.82 | 0.93 | 0.93 | 1.00 |
| | | PI | 0.78 | 0.78 | 0.78 | 0.78 | 0.78 | 0.82 | 0.82 | 0.82 | 0.82 | 0.83 | 0.87 | 0.87 | 0.87 | 0.87 | 0.87 | 0.92 | 0.93 | 0.93 | 0.93 | 0.93 |

## LEGEND

TC: Total Cooling Capacity (BTU/hr)
S/T: Sensible Cooling Capacity Ratio
PI: Power Input (kW)

Manufacturer reserves the right to change, at any time, specifications and designs without notice and without obligations.

# Table 9: Cooling Performance 18K

| AIRFLOW (CFM) | OUTDOOR DB °F (℃) | ID WB°F (℃) | 60.8°F(16.0℃) | | | | | 64.4°F(18.0℃) | | | | | 67°F(19.4℃) | | | | | 71.6°F(22.0℃) | | | | |
|---|---|---|---|---|---|---|---|---|---|---|---|---|---|---|---|---|---|---|---|---|---|---|
| | | ID DB°F (℃) | 73.4°F (23.0℃) | 77.0°F (25.0℃) | 80.0°F (26.7℃) | 80.6°F (27.0℃) | 84.2°F (29.0℃) | 73.4°F (23.0℃) | 77.0°F (25.0℃) | 80.0°F 26.7℃) | 80.6°F (27.0℃) | 84.2°F (29.0℃) | 73.4°F (23.0℃) | 77.0°F (25.0℃) | 80.0°F (26.7℃) | 80.6°F (27.0℃) | 84.2°F (29.0℃) | 73.4°F (23.0℃) | 77.0°F( 25.0℃) | 80.0°F (26.7℃) | 80.6°F (27.0℃) | 84.2°F (29.0℃) |
| 306 | 5°F(-15.0℃) | TC | 15228 | 15249 | 15265 | 15266 | 15287 | 16146 | 16165 | 16181 | 16184 | 16204 | 17111 | 17133 | 17152 | 17155 | 17174 | 18142 | 18161 | 18181 | 18184 | 18207 |
| | | S/T | 0.44 | 0.52 | 0.59 | 0.59 | 0.67 | 0.47 | 0.55 | 0.63 | 0.63 | 0.71 | 0.50 | 0.58 | 0.66 | 0.66 | 0.76 | 0.53 | 0.62 | 0.70 | 0.70 | 0.80 |
| | | PI | 0.89 | 0.89 | 0.89 | 0.89 | 0.89 | 0.94 | 0.95 | 0.95 | 0.95 | 0.95 | 1.00 | 1.00 | 1.00 | 1.00 | 1.00 | 1.06 | 1.06 | 1.06 | 1.06 | 1.06 |
| | 14°F(-10.0℃) | TC | 15576 | 15597 | 15614 | 15615 | 15636 | 16515 | 16534 | 16551 | 16554 | 16574 | 17501 | 17524 | 17544 | 17547 | 17567 | 18556 | 18576 | 18596 | 18599 | 18622 |
| | | S/T | 0.44 | 0.52 | 0.59 | 0.59 | 0.67 | 0.47 | 0.55 | 0.63 | 0.63 | 0.71 | 0.50 | 0.58 | 0.66 | 0.66 | 0.76 | 0.53 | 0.62 | 0.70 | 0.70 | 0.80 |
| | | PI | 0.88 | 0.88 | 0.88 | 0.88 | 0.88 | 0.93 | 0.93 | 0.93 | 0.93 | 0.94 | 0.99 | 0.99 | 0.99 | 0.99 | 0.99 | 1.05 | 1.05 | 1.05 | 1.05 | 1.05 |
| | 17°F(-8.3℃) | TC | 15692 | 15713 | 15730 | 15731 | 15752 | 16638 | 16657 | 16674 | 16677 | 16697 | 17632 | 17655 | 17674 | 17678 | 17697 | 18694 | 18714 | 18735 | 18738 | 18761 |
| | | S/T | 0.44 | 0.52 | 0.59 | 0.59 | 0.68 | 0.47 | 0.55 | 0.63 | 0.63 | 0.72 | 0.50 | 0.59 | 0.67 | 0.67 | 0.76 | 0.53 | 0.62 | 0.71 | 0.71 | 0.81 |
| | | PI | 0.88 | 0.88 | 0.88 | 0.88 | 0.88 | 0.93 | 0.93 | 0.93 | 0.93 | 0.93 | 0.98 | 0.99 | 0.99 | 0.99 | 0.99 | 1.04 | 1.04 | 1.05 | 1.05 | 1.05 |
| | 23°F(-5.0℃) | TC | 16260 | 16282 | 16300 | 16301 | 16323 | 17240 | 17261 | 17278 | 17281 | 17302 | 18270 | 18294 | 18315 | 18318 | 18338 | 19371 | 19392 | 19413 | 19416 | 19441 |
| | | S/T | 0.45 | 0.52 | 0.60 | 0.60 | 0.68 | 0.47 | 0.56 | 0.63 | 0.63 | 0.72 | 0.50 | 0.59 | 0.67 | 0.67 | 0.76 | 0.53 | 0.62 | 0.71 | 0.71 | 0.81 |
| | | PI | 0.84 | 0.84 | 0.84 | 0.84 | 0.84 | 0.89 | 0.89 | 0.89 | 0.89 | 0.89 | 0.94 | 0.94 | 0.94 | 0.94 | 0.95 | 1.00 | 1.00 | 1.00 | 1.00 | 1.00 |
| | 35°F(1.7℃) | TC | 17398 | 17421 | 17440 | 17440 | 17464 | 18446 | 18468 | 18486 | 18490 | 18512 | 19548 | 19573 | 19595 | 19599 | 19621 | 20726 | 20748 | 20771 | 20774 | 20800 |
| | | S/T | 0.45 | 0.53 | 0.60 | 0.60 | 0.68 | 0.48 | 0.56 | 0.63 | 0.64 | 0.72 | 0.50 | 0.59 | 0.67 | 0.67 | 0.77 | 0.54 | 0.63 | 0.71 | 0.71 | 0.81 |
| | | PI | 0.76 | 0.77 | 0.77 | 0.77 | 0.77 | 0.81 | 0.81 | 0.81 | 0.81 | 0.81 | 0.86 | 0.86 | 0.86 | 0.86 | 0.86 | 0.91 | 0.91 | 0.91 | 0.91 | 0.91 |
| | 41°F(5.0℃) | TC | 15499 | 15520 | 15536 | 15537 | 15558 | 16433 | 16452 | 16469 | 16472 | 16491 | 17415 | 17437 | 17457 | 17460 | 17479 | 18464 | 18484 | 18504 | 18507 | 18530 |
| | | S/T | 0.45 | 0.53 | 0.60 | 0.60 | 0.68 | 0.48 | 0.56 | 0.64 | 0.64 | 0.73 | 0.51 | 0.59 | 0.67 | 0.67 | 0.77 | 0.54 | 0.63 | 0.71 | 0.71 | 0.81 |
| | | PI | 0.68 | 0.68 | 0.68 | 0.68 | 0.68 | 0.72 | 0.72 | 0.72 | 0.72 | 0.72 | 0.76 | 0.77 | 0.77 | 0.77 | 0.77 | 0.81 | 0.81 | 0.81 | 0.81 | 0.81 |
| | 47°F(8.3℃) | TC | 13600 | 13618 | 13633 | 13634 | 13652 | 14420 | 14437 | 14451 | 14454 | 14471 | 15281 | 15301 | 15318 | 15321 | 15338 | 16202 | 16220 | 16237 | 16240 | 16260 |
| | | S/T | 0.45 | 0.53 | 0.60 | 0.60 | 0.69 | 0.48 | 0.56 | 0.64 | 0.64 | 0.73 | 0.51 | 0.60 | 0.68 | 0.68 | 0.77 | 0.54 | 0.63 | 0.72 | 0.72 | 0.82 |
| | | PI | 0.60 | 0.60 | 0.60 | 0.60 | 0.60 | 0.63 | 0.63 | 0.63 | 0.63 | 0.63 | 0.67 | 0.67 | 0.67 | 0.67 | 0.67 | 0.71 | 0.71 | 0.71 | 0.71 | 0.71 |
| | 50°F(10.0℃) | TC | 13740 | 13758 | 13773 | 13774 | 13792 | 14568 | 14585 | 14600 | 14602 | 14620 | 15438 | 15458 | 15475 | 15478 | 15496 | 16368 | 16386 | 16404 | 16407 | 16427 |
| | | S/T | 0.45 | 0.53 | 0.61 | 0.61 | 0.69 | 0.48 | 0.56 | 0.64 | 0.64 | 0.73 | 0.51 | 0.60 | 0.68 | 0.68 | 0.78 | 0.54 | 0.63 | 0.72 | 0.72 | 0.82 |
| | | PI | 0.61 | 0.61 | 0.61 | 0.61 | 0.61 | 0.64 | 0.64 | 0.65 | 0.65 | 0.65 | 0.68 | 0.68 | 0.68 | 0.68 | 0.68 | 0.72 | 0.72 | 0.72 | 0.73 | 0.73 |
| | 59°F(15.0℃) | TC | 14159 | 14178 | 14193 | 14194 | 14213 | 15012 | 15030 | 15045 | 15048 | 15066 | 15909 | 15930 | 15948 | 15951 | 15968 | 16868 | 16886 | 16905 | 16907 | 16928 |
| | | S/T | 0.46 | 0.54 | 0.61 | 0.61 | 0.69 | 0.48 | 0.57 | 0.64 | 0.64 | 0.73 | 0.51 | 0.60 | 0.68 | 0.68 | 0.78 | 0.54 | 0.64 | 0.72 | 0.72 | 0.83 |
| | | PI | 0.64 | 0.64 | 0.64 | 0.64 | 0.64 | 0.68 | 0.68 | 0.68 | 0.68 | 0.68 | 0.72 | 0.72 | 0.72 | 0.72 | 0.72 | 0.76 | 0.76 | 0.76 | 0.76 | 0.77 |
| | 68°F(20.0℃) | TC | 14578 | 14598 | 14614 | 14614 | 14634 | 15457 | 15475 | 15490 | 15493 | 15512 | 16380 | 16402 | 16420 | 16423 | 16441 | 17367 | 17386 | 17405 | 17408 | 17429 |
| | | S/T | 0.47 | 0.55 | 0.62 | 0.62 | 0.71 | 0.50 | 0.58 | 0.66 | 0.66 | 0.75 | 0.53 | 0.62 | 0.70 | 0.70 | 0.80 | 0.56 | 0.65 | 0.74 | 0.74 | 0.85 |
| | | PI | 0.67 | 0.67 | 0.68 | 0.68 | 0.68 | 0.71 | 0.72 | 0.72 | 0.72 | 0.72 | 0.76 | 0.76 | 0.76 | 0.76 | 0.76 | 0.80 | 0.80 | 0.80 | 0.80 | 0.81 |
| | 77°F(25.0℃) | TC | 14997 | 15018 | 15034 | 15035 | 15055 | 15901 | 15920 | 15936 | 15939 | 15958 | 16851 | 16873 | 16892 | 16895 | 16914 | 17867 | 17886 | 17906 | 17908 | 17931 |
| | | S/T | 0.47 | 0.56 | 0.63 | 0.63 | 0.72 | 0.50 | 0.59 | 0.67 | 0.67 | 0.76 | 0.53 | 0.63 | 0.71 | 0.71 | 0.81 | 0.56 | 0.66 | 0.75 | 0.75 | 0.86 |
| | | PI | 0.71 | 0.71 | 0.71 | 0.71 | 0.71 | 0.75 | 0.75 | 0.75 | 0.75 | 0.75 | 0.79 | 0.80 | 0.80 | 0.80 | 0.80 | 0.84 | 0.84 | 0.84 | 0.84 | 0.85 |

Manufacturer reserves the right to change, at any time, specifications and designs without notice and without obligations.

# Table 9: Cooling Performance 18K (Continued)

| AIRFLOW (CFM) | OUTDOOR DB °F (°C) | ID WB°F (°C) | 60.8°F(16.0°C) | | | | | 64.4°F(18.0°C) | | | | | 67°F(19.4°C) | | | | | 71.6°F(22.0°C) | | | | |
|---|---|---|---|---|---|---|---|---|---|---|---|---|---|---|---|---|---|---|---|---|---|---|
| | | ID DB°F (°C) | 73.4°F (23.0°C) | 77.0°F (25.0°C) | 80.0°F (26.7°C) | 80.6°F (27.0°C) | 84.2°F (29.0°C) | 73.4°F (23.0°C) | 77.0°F (25.0°C) | 80.0°F 26.7°C) | 80.6°F (27.0°C) | 84.2°F (29.0°C) | 73.4°F (23.0°C) | 77.0°F (25.0°C) | 80.0°F (26.7°C) | 80.6°F (27.0°C) | 84.2°F (29.0°C) | 73.4°F (23.0°C) | 77.0°F( 25.0°C) | 80.0°F (26.7°C) | 80.6°F (27.0°C) | 84.2°F (29.0°C) |
| 306 | 82°F(27.8°C) | TC | 15106 | 15126 | 15142 | 15143 | 15163 | 16016 | 16035 | 16051 | 16054 | 16073 | 16973 | 16995 | 17014 | 17017 | 17036 | 17996 | 18015 | 18035 | 18038 | 18060 |
| | | S/T | 0.48 | 0.56 | 0.64 | 0.64 | 0.73 | 0.51 | 0.60 | 0.68 | 0.68 | 0.77 | 0.54 | 0.63 | 0.72 | 0.72 | 0.82 | 0.57 | 0.67 | 0.76 | 0.76 | 0.87 |
| | | PI | 0.79 | 0.79 | 0.80 | 0.80 | 0.80 | 0.84 | 0.84 | 0.84 | 0.84 | 0.84 | 0.89 | 0.89 | 0.89 | 0.89 | 0.89 | 0.95 | 0.95 | 0.95 | 0.95 | 0.95 |
| | 86°F(30.0°C) | TC | 15035 | 15055 | 15071 | 15072 | 15092 | 15941 | 15960 | 15976 | 15979 | 15998 | 16893 | 16915 | 16934 | 16937 | 16956 | 17911 | 17931 | 17950 | 17953 | 17975 |
| | | S/T | 0.49 | 0.57 | 0.65 | 0.65 | 0.74 | 0.52 | 0.61 | 0.69 | 0.69 | 0.78 | 0.55 | 0.64 | 0.73 | 0.73 | 0.83 | 0.58 | 0.68 | 0.77 | 0.77 | 0.88 |
| | | PI | 0.95 | 0.95 | 0.95 | 0.95 | 0.95 | 1.01 | 1.01 | 1.01 | 1.01 | 1.01 | 1.07 | 1.07 | 1.07 | 1.07 | 1.07 | 1.13 | 1.13 | 1.13 | 1.13 | 1.13 |
| | 95°F(35.0°C) | TC | 14876 | 14896 | 14912 | 14912 | 14932 | 15772 | 15791 | 15806 | 15810 | 15828 | 16714 | 16736 | 16755 | 16758 | 16777 | 17721 | 17741 | 17760 | 17763 | 17785 |
| | | S/T | 0.49 | 0.57 | 0.65 | 0.65 | 0.74 | 0.52 | 0.61 | 0.69 | 0.69 | 0.78 | 0.55 | 0.64 | 0.73 | 0.73 | 0.83 | 0.58 | 0.68 | 0.77 | 0.77 | 0.88 |
| | | PI | 1.30 | 1.30 | 1.30 | 1.30 | 1.30 | 1.38 | 1.38 | 1.38 | 1.38 | 1.38 | 1.46 | 1.46 | 1.46 | 1.46 | 1.46 | 1.55 | 1.55 | 1.55 | 1.55 | 1.55 |
| | 104°F(40.0°C) | TC | 13078 | 13096 | 13110 | 13110 | 13128 | 13866 | 13883 | 13896 | 13899 | 13916 | 14695 | 14714 | 14730 | 14733 | 14749 | 15580 | 15597 | 15614 | 15616 | 15636 |
| | | S/T | 0.50 | 0.59 | 0.66 | 0.66 | 0.76 | 0.53 | 0.62 | 0.70 | 0.70 | 0.80 | 0.56 | 0.66 | 0.75 | 0.75 | 0.85 | 0.59 | 0.70 | 0.79 | 0.79 | 0.90 |
| | | PI | 1.27 | 1.27 | 1.28 | 1.28 | 1.28 | 1.35 | 1.35 | 1.35 | 1.35 | 1.35 | 1.43 | 1.43 | 1.43 | 1.43 | 1.44 | 1.52 | 1.52 | 1.52 | 1.52 | 1.52 |
| | 110°F(43.0°C) | TC | 11999 | 12016 | 12029 | 12029 | 12045 | 12723 | 12738 | 12750 | 12753 | 12768 | 13483 | 13500 | 13515 | 13518 | 13533 | 14295 | 14311 | 14326 | 14328 | 14346 |
| | | S/T | 0.52 | 0.61 | 0.69 | 0.69 | 0.79 | 0.55 | 0.64 | 0.73 | 0.73 | 0.83 | 0.58 | 0.68 | 0.77 | 0.77 | 0.88 | 0.62 | 0.72 | 0.82 | 0.82 | 0.94 |
| | | PI | 1.26 | 1.26 | 1.26 | 1.26 | 1.26 | 1.33 | 1.34 | 1.34 | 1.34 | 1.34 | 1.41 | 1.42 | 1.42 | 1.42 | 1.42 | 1.50 | 1.50 | 1.50 | 1.50 | 1.50 |
| | 115°F(46.0°C) | TC | 9658 | 9671 | 9681 | 9681 | 9694 | 10240 | 10252 | 10262 | 10264 | 10276 | 10851 | 10865 | 10878 | 10880 | 10892 | 11505 | 11518 | 11530 | 11532 | 11546 |
| | | S/T | 0.52 | 0.61 | 0.70 | 0.70 | 0.79 | 0.55 | 0.65 | 0.74 | 0.74 | 0.84 | 0.59 | 0.69 | 0.78 | 0.78 | 0.89 | 0.62 | 0.73 | 0.83 | 0.83 | 0.95 |
| | | PI | 1.05 | 1.05 | 1.06 | 1.06 | 1.06 | 1.12 | 1.12 | 1.12 | 1.12 | 1.12 | 1.18 | 1.19 | 1.19 | 1.19 | 1.19 | 1.26 | 1.26 | 1.26 | 1.26 | 1.26 |
| | 122°F(50.0°C) | TC | 6535 | 6544 | 6551 | 6551 | 6560 | 6929 | 6937 | 6944 | 6945 | 6954 | 7343 | 7352 | 7361 | 7362 | 7370 | 7785 | 7794 | 7802 | 7803 | 7813 |
| | | S/T | 0.54 | 0.63 | 0.71 | 0.71 | 0.81 | 0.57 | 0.67 | 0.76 | 0.76 | 0.86 | 0.60 | 0.71 | 0.80 | 0.80 | 0.91 | 0.64 | 0.75 | 0.85 | 0.85 | 0.97 |
| | | PI | 0.78 | 0.78 | 0.78 | 0.78 | 0.78 | 0.83 | 0.83 | 0.83 | 0.83 | 0.83 | 0.88 | 0.88 | 0.88 | 0.88 | 0.88 | 0.93 | 0.93 | 0.93 | 0.93 | 0.93 |
| 353 | 5°F(-15.0°C) | TC | 15709 | 15730 | 15747 | 15748 | 15769 | 16656 | 16675 | 16692 | 16695 | 16715 | 17651 | 17674 | 17693 | 17697 | 17716 | 18714 | 18734 | 18755 | 18758 | 18781 |
| | | S/T | 0.46 | 0.54 | 0.61 | 0.61 | 0.69 | 0.48 | 0.57 | 0.65 | 0.65 | 0.74 | 0.51 | 0.60 | 0.68 | 0.68 | 0.78 | 0.54 | 0.64 | 0.72 | 0.73 | 0.83 |
| | | PI | 0.92 | 0.92 | 0.92 | 0.92 | 0.92 | 0.97 | 0.98 | 0.98 | 0.98 | 0.98 | 1.03 | 1.03 | 1.03 | 1.03 | 1.04 | 1.09 | 1.10 | 1.10 | 1.10 | 1.10 |
| | 14°F(-10.0°C) | TC | 16068 | 16089 | 16106 | 16107 | 16129 | 17036 | 17056 | 17073 | 17076 | 17097 | 18054 | 18077 | 18097 | 18101 | 18121 | 19141 | 19162 | 19183 | 19186 | 19210 |
| | | S/T | 0.46 | 0.54 | 0.61 | 0.61 | 0.70 | 0.48 | 0.57 | 0.65 | 0.65 | 0.74 | 0.51 | 0.60 | 0.69 | 0.69 | 0.78 | 0.54 | 0.64 | 0.73 | 0.73 | 0.83 |
| | | PI | 0.91 | 0.91 | 0.91 | 0.91 | 0.91 | 0.96 | 0.96 | 0.96 | 0.96 | 0.97 | 1.02 | 1.02 | 1.02 | 1.02 | 1.02 | 1.08 | 1.08 | 1.08 | 1.08 | 1.08 |
| | 17°F(-8.3°C) | TC | 16187 | 16209 | 16226 | 16227 | 16249 | 17163 | 17183 | 17200 | 17203 | 17224 | 18188 | 18212 | 18232 | 18235 | 18256 | 19284 | 19305 | 19326 | 19329 | 19353 |
| | | S/T | 0.46 | 0.54 | 0.61 | 0.61 | 0.70 | 0.49 | 0.57 | 0.65 | 0.65 | 0.74 | 0.52 | 0.60 | 0.69 | 0.69 | 0.78 | 0.55 | 0.64 | 0.73 | 0.73 | 0.83 |
| | | PI | 0.90 | 0.90 | 0.91 | 0.91 | 0.91 | 0.96 | 0.96 | 0.96 | 0.96 | 0.96 | 1.02 | 1.02 | 1.02 | 1.02 | 1.02 | 1.08 | 1.08 | 1.08 | 1.08 | 1.08 |
| | 23°F(-5.0°C) | TC | 16774 | 16796 | 16814 | 16815 | 16838 | 17784 | 17805 | 17823 | 17827 | 17848 | 18847 | 18871 | 18892 | 18896 | 18917 | 19983 | 20004 | 20026 | 20029 | 20054 |
| | | S/T | 0.46 | 0.54 | 0.61 | 0.61 | 0.70 | 0.49 | 0.57 | 0.65 | 0.65 | 0.74 | 0.52 | 0.61 | 0.69 | 0.69 | 0.79 | 0.55 | 0.64 | 0.73 | 0.73 | 0.83 |
| | | PI | 0.87 | 0.87 | 0.87 | 0.87 | 0.87 | 0.92 | 0.92 | 0.92 | 0.92 | 0.92 | 0.97 | 0.97 | 0.97 | 0.97 | 0.98 | 1.03 | 1.03 | 1.03 | 1.03 | 1.03 |

Manufacturer reserves the right to change, at any time, specifications and designs without notice and without obligations.

# Table 9: Cooling Performance 18K (Continued)

| AIRFLOW (CFM) | OUTDOOR DB °F (℃) | ID WB°F (℃) | 60.8°F(16.0℃) | | | | | 64.4°F(18.0℃) | | | | | 67°F(19.4℃) | | | | | 71.6°F(22.0℃) | | | | |
|---|---|---|---|---|---|---|---|---|---|---|---|---|---|---|---|---|---|---|---|---|---|---|
| | | ID DB°F (℃) | 73.4°F (23.0℃) | 77.0°F (25.0℃) | 80.0°F (26.7℃) | 80.6°F (27.0℃) | 84.2°F (29.0℃) | 73.4°F (23.0℃) | 77.0°F (25.0℃) | 80.0°F 26.7℃) | 80.6°F (27.0℃) | 84.2°F (29.0℃) | 73.4°F (23.0℃) | 77.0°F (25.0℃) | 80.0°F (26.7℃) | 80.6°F (27.0℃) | 84.2°F (29.0℃) | 73.4°F (23.0℃) | 77.0°F( 25.0℃) | 80.0°F (26.7℃) | 80.6°F (27.0℃) | 84.2°F (29.0℃) |
| 353 | 35°F(1.7℃) | TC | 17946 | 17971 | 17990 | 17991 | 18015 | 19028 | 19051 | 19069 | 19073 | 19096 | 20165 | 20191 | 20214 | 20217 | 20240 | 21380 | 21403 | 21426 | 21430 | 21456 |
| | | S/T | 0.46 | 0.54 | 0.62 | 0.62 | 0.70 | 0.49 | 0.58 | 0.65 | 0.66 | 0.75 | 0.52 | 0.61 | 0.69 | 0.69 | 0.79 | 0.55 | 0.65 | 0.74 | 0.74 | 0.84 |
| | | PI | 0.79 | 0.79 | 0.79 | 0.79 | 0.79 | 0.84 | 0.84 | 0.84 | 0.84 | 0.84 | 0.89 | 0.89 | 0.89 | 0.89 | 0.89 | 0.94 | 0.94 | 0.94 | 0.94 | 0.94 |
| | 41°F(5.0℃) | TC | 15988 | 16009 | 16027 | 16027 | 16049 | 16951 | 16971 | 16988 | 16992 | 17012 | 17964 | 17987 | 18007 | 18011 | 18031 | 19046 | 19067 | 19088 | 19091 | 19115 |
| | | S/T | 0.46 | 0.54 | 0.62 | 0.62 | 0.71 | 0.49 | 0.58 | 0.66 | 0.66 | 0.75 | 0.52 | 0.61 | 0.70 | 0.70 | 0.79 | 0.55 | 0.65 | 0.74 | 0.74 | 0.84 |
| | | PI | 0.70 | 0.70 | 0.70 | 0.70 | 0.70 | 0.74 | 0.74 | 0.75 | 0.75 | 0.75 | 0.79 | 0.79 | 0.79 | 0.79 | 0.79 | 0.84 | 0.84 | 0.84 | 0.84 | 0.84 |
| | 47°F(8.3℃) | TC | 14029 | 14048 | 14063 | 14064 | 14083 | 14875 | 14892 | 14907 | 14910 | 14928 | 15763 | 15784 | 15801 | 15804 | 15822 | 16713 | 16731 | 16750 | 16752 | 16773 |
| | | S/T | 0.47 | 0.55 | 0.62 | 0.62 | 0.71 | 0.49 | 0.58 | 0.66 | 0.66 | 0.75 | 0.52 | 0.61 | 0.70 | 0.70 | 0.80 | 0.55 | 0.65 | 0.74 | 0.74 | 0.84 |
| | | PI | 0.61 | 0.62 | 0.62 | 0.62 | 0.62 | 0.65 | 0.65 | 0.65 | 0.65 | 0.65 | 0.69 | 0.69 | 0.69 | 0.69 | 0.69 | 0.73 | 0.73 | 0.73 | 0.73 | 0.74 |
| | 50°F(10.0℃) | TC | 14173 | 14192 | 14208 | 14208 | 14228 | 15028 | 15045 | 15060 | 15063 | 15081 | 15925 | 15946 | 15964 | 15967 | 15985 | 16885 | 16903 | 16922 | 16924 | 16945 |
| | | S/T | 0.47 | 0.55 | 0.62 | 0.62 | 0.71 | 0.50 | 0.58 | 0.66 | 0.66 | 0.75 | 0.53 | 0.62 | 0.70 | 0.70 | 0.80 | 0.56 | 0.65 | 0.74 | 0.74 | 0.85 |
| | | PI | 0.63 | 0.63 | 0.63 | 0.63 | 0.63 | 0.66 | 0.66 | 0.67 | 0.67 | 0.67 | 0.70 | 0.70 | 0.71 | 0.71 | 0.71 | 0.75 | 0.75 | 0.75 | 0.75 | 0.75 |
| | 59°F(15.0℃) | TC | 14606 | 14625 | 14641 | 14642 | 14662 | 15486 | 15504 | 15520 | 15523 | 15541 | 16411 | 16433 | 16451 | 16454 | 16472 | 17400 | 17419 | 17438 | 17441 | 17462 |
| | | S/T | 0.47 | 0.55 | 0.63 | 0.63 | 0.72 | 0.50 | 0.59 | 0.66 | 0.66 | 0.76 | 0.53 | 0.62 | 0.70 | 0.70 | 0.80 | 0.56 | 0.66 | 0.75 | 0.75 | 0.85 |
| | | PI | 0.66 | 0.66 | 0.66 | 0.66 | 0.66 | 0.70 | 0.70 | 0.70 | 0.70 | 0.70 | 0.74 | 0.74 | 0.74 | 0.74 | 0.75 | 0.79 | 0.79 | 0.79 | 0.79 | 0.79 |
| | 68°F(20.0℃) | TC | 15038 | 15058 | 15075 | 15075 | 15096 | 15945 | 15963 | 15979 | 15982 | 16001 | 16897 | 16919 | 16938 | 16941 | 16960 | 17915 | 17935 | 17954 | 17957 | 17979 |
| | | S/T | 0.48 | 0.57 | 0.64 | 0.64 | 0.73 | 0.51 | 0.60 | 0.68 | 0.68 | 0.78 | 0.54 | 0.64 | 0.72 | 0.72 | 0.82 | 0.58 | 0.67 | 0.77 | 0.77 | 0.87 |
| | | PI | 0.69 | 0.70 | 0.70 | 0.70 | 0.70 | 0.74 | 0.74 | 0.74 | 0.74 | 0.74 | 0.78 | 0.78 | 0.78 | 0.78 | 0.78 | 0.83 | 0.83 | 0.83 | 0.83 | 0.83 |
| | 77°F(25.0℃) | TC | 15471 | 15492 | 15508 | 15509 | 15530 | 16403 | 16422 | 16439 | 16442 | 16461 | 17383 | 17406 | 17425 | 17428 | 17448 | 18430 | 18450 | 18471 | 18473 | 18496 |
| | | S/T | 0.49 | 0.57 | 0.65 | 0.65 | 0.74 | 0.52 | 0.61 | 0.69 | 0.69 | 0.79 | 0.55 | 0.65 | 0.73 | 0.73 | 0.84 | 0.58 | 0.68 | 0.78 | 0.78 | 0.89 |
| | | PI | 0.73 | 0.73 | 0.73 | 0.73 | 0.73 | 0.77 | 0.77 | 0.77 | 0.78 | 0.78 | 0.82 | 0.82 | 0.82 | 0.82 | 0.82 | 0.87 | 0.87 | 0.87 | 0.87 | 0.87 |
| | 82°F(27.8℃) | TC | 15582 | 15603 | 15620 | 15621 | 15642 | 16521 | 16541 | 16557 | 16561 | 16580 | 17508 | 17531 | 17551 | 17554 | 17574 | 18563 | 18584 | 18604 | 18607 | 18630 |
| | | S/T | 0.50 | 0.58 | 0.66 | 0.66 | 0.75 | 0.53 | 0.62 | 0.70 | 0.70 | 0.80 | 0.56 | 0.65 | 0.74 | 0.74 | 0.85 | 0.59 | 0.69 | 0.79 | 0.79 | 0.90 |
| | | PI | 0.82 | 0.82 | 0.82 | 0.82 | 0.82 | 0.87 | 0.87 | 0.87 | 0.87 | 0.87 | 0.92 | 0.92 | 0.92 | 0.92 | 0.92 | 0.98 | 0.98 | 0.98 | 0.98 | 0.98 |
| | 86°F(30.0℃) | TC | 15509 | 15530 | 15547 | 15548 | 15569 | 16444 | 16463 | 16480 | 16483 | 16503 | 17426 | 17449 | 17468 | 17472 | 17491 | 18476 | 18496 | 18517 | 18519 | 18543 |
| | | S/T | 0.50 | 0.59 | 0.67 | 0.67 | 0.76 | 0.53 | 0.62 | 0.71 | 0.71 | 0.81 | 0.56 | 0.66 | 0.75 | 0.75 | 0.86 | 0.60 | 0.70 | 0.80 | 0.80 | 0.91 |
| | | PI | 0.98 | 0.98 | 0.98 | 0.98 | 0.98 | 1.04 | 1.04 | 1.04 | 1.04 | 1.04 | 1.10 | 1.10 | 1.10 | 1.10 | 1.10 | 1.17 | 1.17 | 1.17 | 1.17 | 1.17 |
| | 95°F(35.0℃) | TC | 15345 | 15366 | 15382 | 15383 | 15404 | 16270 | 16289 | 16305 | 16308 | 16328 | 17242 | 17264 | 17283 | 17287 | 17306 | 18281 | 18301 | 18320 | 18323 | 18346 |
| | | S/T | 0.50 | 0.59 | 0.67 | 0.67 | 0.76 | 0.53 | 0.62 | 0.71 | 0.71 | 0.81 | 0.56 | 0.66 | 0.75 | 0.75 | 0.86 | 0.60 | 0.70 | 0.80 | 0.80 | 0.91 |
| | | PI | 1.34 | 1.34 | 1.34 | 1.34 | 1.34 | 1.42 | 1.42 | 1.42 | 1.42 | 1.42 | 1.50 | 1.51 | 1.51 | 1.51 | 1.51 | 1.60 | 1.60 | 1.60 | 1.60 | 1.60 |
| | 104°F(40.0℃) | TC | 13491 | 13509 | 13523 | 13524 | 13542 | 14304 | 14321 | 14335 | 14338 | 14355 | 15158 | 15178 | 15195 | 15198 | 15215 | 16072 | 16089 | 16107 | 16109 | 16129 |
| | | S/T | 0.51 | 0.60 | 0.69 | 0.69 | 0.78 | 0.55 | 0.64 | 0.73 | 0.73 | 0.83 | 0.58 | 0.68 | 0.77 | 0.77 | 0.88 | 0.61 | 0.72 | 0.82 | 0.82 | 0.93 |
| | | PI | 1.31 | 1.31 | 1.32 | 1.32 | 1.32 | 1.39 | 1.39 | 1.40 | 1.40 | 1.40 | 1.48 | 1.48 | 1.48 | 1.48 | 1.48 | 1.56 | 1.57 | 1.57 | 1.57 | 1.57 |

Manufacturer reserves the right to change, at any time, specifications and designs without notice and without obligations.

# Table 9: Cooling Performance 18K (Continued)

| AIRFLOW (CFM) | OUTDOOR DB °F (°C) | ID WB°F (°C) | 60.8°F(16.0°C) | | | | | 64.4°F(18.0°C) | | | | | 67°F(19.4°C) | | | | | 71.6°F(22.0°C) | | | | |
|---|---|---|---|---|---|---|---|---|---|---|---|---|---|---|---|---|---|---|---|---|---|---|
| | | ID DB°F (°C) | 73.4°F (23.0°C) | 77.0°F (25.0°C) | 80.0°F (26.7°C) | 80.6°F (27.0°C) | 84.2°F (29.0°C) | 73.4°F (23.0°C) | 77.0°F (25.0°C) | 80.0°F 26.7°C) | 80.6°F (27.0°C) | 84.2°F (29.0°C) | 73.4°F (23.0°C) | 77.0°F (25.0°C) | 80.0°F (26.7°C) | 80.6°F (27.0°C) | 84.2°F (29.0°C) | 73.4°F (23.0°C) | 77.0°F( 25.0°C) | 80.0°F (26.7°C) | 80.6°F (27.0°C) | 84.2°F (29.0°C) |
| 353 | 110°F(43.0°C) | TC | 12378 | 12395 | 12408 | 12409 | 12425 | 13124 | 13140 | 13153 | 13155 | 13171 | 13908 | 13926 | 13942 | 13944 | 13960 | 14746 | 14762 | 14778 | 14780 | 14799 |
| | | S/T | 0.53 | 0.63 | 0.71 | 0.71 | 0.81 | 0.57 | 0.66 | 0.75 | 0.75 | 0.86 | 0.60 | 0.70 | 0.80 | 0.80 | 0.91 | 0.64 | 0.75 | 0.85 | 0.85 | 0.97 |
| | | PI | 1.30 | 1.30 | 1.30 | 1.30 | 1.30 | 1.38 | 1.38 | 1.38 | 1.38 | 1.38 | 1.46 | 1.46 | 1.46 | 1.46 | 1.46 | 1.55 | 1.55 | 1.55 | 1.55 | 1.55 |
| | 115°F(46.0°C) | TC | 9962 | 9976 | 9986 | 9987 | 10000 | 10563 | 10575 | 10586 | 10588 | 10600 | 11194 | 11208 | 11221 | 11223 | 11235 | 11868 | 11881 | 11894 | 11896 | 11911 |
| | | S/T | 0.54 | 0.63 | 0.72 | 0.72 | 0.82 | 0.57 | 0.67 | 0.76 | 0.76 | 0.87 | 0.61 | 0.71 | 0.81 | 0.81 | 0.92 | 0.64 | 0.75 | 0.86 | 0.86 | 0.98 |
| | | PI | 1.09 | 1.09 | 1.09 | 1.09 | 1.09 | 1.15 | 1.15 | 1.15 | 1.16 | 1.16 | 1.22 | 1.22 | 1.22 | 1.22 | 1.23 | 1.29 | 1.30 | 1.30 | 1.30 | 1.30 |
| | 122°F(50.0°C) | TC | 6741 | 6750 | 6758 | 6758 | 6767 | 7148 | 7156 | 7163 | 7165 | 7173 | 7575 | 7584 | 7593 | 7594 | 7603 | 8031 | 8040 | 8048 | 8050 | 8060 |
| | | S/T | 0.55 | 0.65 | 0.74 | 0.74 | 0.84 | 0.59 | 0.69 | 0.78 | 0.78 | 0.89 | 0.62 | 0.73 | 0.83 | 0.83 | 0.94 | 0.66 | 0.77 | 0.88 | 0.88 | 1.00 |
| | | PI | 0.81 | 0.81 | 0.81 | 0.81 | 0.81 | 0.85 | 0.86 | 0.86 | 0.86 | 0.86 | 0.91 | 0.91 | 0.91 | 0.91 | 0.91 | 0.96 | 0.96 | 0.96 | 0.96 | 0.96 |
| 471 | 5°F(-15.0°C) | TC | 16205 | 16226 | 16244 | 16245 | 16266 | 17181 | 17201 | 17218 | 17222 | 17242 | 18208 | 18231 | 18252 | 18255 | 18275 | 19305 | 19326 | 19347 | 19350 | 19374 |
| | | S/T | 0.47 | 0.55 | 0.63 | 0.63 | 0.72 | 0.50 | 0.59 | 0.67 | 0.67 | 0.76 | 0.53 | 0.62 | 0.71 | 0.71 | 0.80 | 0.56 | 0.66 | 0.75 | 0.75 | 0.85 |
| | | PI | 0.95 | 0.95 | 0.95 | 0.95 | 0.95 | 1.00 | 1.01 | 1.01 | 1.01 | 1.01 | 1.06 | 1.07 | 1.07 | 1.07 | 1.07 | 1.13 | 1.13 | 1.13 | 1.13 | 1.13 |
| | 14°F(-10.0°C) | TC | 16575 | 16597 | 16615 | 16615 | 16638 | 17573 | 17594 | 17612 | 17615 | 17636 | 18623 | 18647 | 18668 | 18672 | 18693 | 19745 | 19767 | 19788 | 19791 | 19816 |
| | | S/T | 0.47 | 0.55 | 0.63 | 0.63 | 0.72 | 0.50 | 0.59 | 0.67 | 0.67 | 0.76 | 0.53 | 0.62 | 0.71 | 0.71 | 0.81 | 0.56 | 0.66 | 0.75 | 0.75 | 0.85 |
| | | PI | 0.94 | 0.94 | 0.94 | 0.94 | 0.94 | 0.99 | 0.99 | 0.99 | 0.99 | 1.00 | 1.05 | 1.05 | 1.05 | 1.05 | 1.06 | 1.12 | 1.12 | 1.12 | 1.12 | 1.12 |
| | 17°F(-8.3°C) | TC | 16698 | 16720 | 16738 | 16739 | 16762 | 17704 | 17725 | 17743 | 17746 | 17767 | 18762 | 18786 | 18807 | 18811 | 18832 | 19892 | 19914 | 19936 | 19939 | 19964 |
| | | S/T | 0.47 | 0.56 | 0.63 | 0.63 | 0.72 | 0.50 | 0.59 | 0.67 | 0.67 | 0.76 | 0.53 | 0.62 | 0.71 | 0.71 | 0.81 | 0.56 | 0.66 | 0.75 | 0.75 | 0.86 |
| | | PI | 0.93 | 0.93 | 0.93 | 0.93 | 0.94 | 0.99 | 0.99 | 0.99 | 0.99 | 0.99 | 1.05 | 1.05 | 1.05 | 1.05 | 1.05 | 1.11 | 1.11 | 1.11 | 1.11 | 1.11 |
| | 23°F(-5.0°C) | TC | 17303 | 17326 | 17345 | 17346 | 17369 | 18346 | 18367 | 18385 | 18389 | 18411 | 19442 | 19467 | 19489 | 19492 | 19514 | 20613 | 20635 | 20658 | 20661 | 20687 |
| | | S/T | 0.48 | 0.56 | 0.63 | 0.63 | 0.72 | 0.50 | 0.59 | 0.67 | 0.67 | 0.77 | 0.53 | 0.63 | 0.71 | 0.71 | 0.81 | 0.57 | 0.66 | 0.76 | 0.76 | 0.86 |
| | | PI | 0.89 | 0.89 | 0.89 | 0.89 | 0.90 | 0.95 | 0.95 | 0.95 | 0.95 | 0.95 | 1.00 | 1.00 | 1.01 | 1.01 | 1.01 | 1.06 | 1.06 | 1.07 | 1.07 | 1.07 |
| | 35°F(1.7°C) | TC | 18513 | 18538 | 18558 | 18558 | 18583 | 19628 | 19652 | 19671 | 19675 | 19698 | 20801 | 20828 | 20851 | 20855 | 20878 | 22054 | 22078 | 22102 | 22106 | 22133 |
| | | S/T | 0.48 | 0.56 | 0.64 | 0.64 | 0.73 | 0.51 | 0.59 | 0.68 | 0.68 | 0.77 | 0.54 | 0.63 | 0.72 | 0.72 | 0.82 | 0.57 | 0.67 | 0.76 | 0.76 | 0.87 |
| | | PI | 0.81 | 0.81 | 0.82 | 0.82 | 0.82 | 0.86 | 0.86 | 0.86 | 0.86 | 0.87 | 0.91 | 0.92 | 0.92 | 0.92 | 0.92 | 0.97 | 0.97 | 0.97 | 0.97 | 0.97 |
| | 41°F(5.0°C) | TC | 16492 | 16514 | 16532 | 16533 | 16555 | 17486 | 17507 | 17524 | 17528 | 17548 | 18531 | 18555 | 18576 | 18579 | 18600 | 19647 | 19669 | 19690 | 19693 | 19718 |
| | | S/T | 0.48 | 0.56 | 0.64 | 0.64 | 0.73 | 0.51 | 0.60 | 0.68 | 0.68 | 0.77 | 0.54 | 0.63 | 0.72 | 0.72 | 0.82 | 0.57 | 0.67 | 0.76 | 0.76 | 0.87 |
| | | PI | 0.72 | 0.72 | 0.73 | 0.73 | 0.73 | 0.77 | 0.77 | 0.77 | 0.77 | 0.77 | 0.81 | 0.81 | 0.82 | 0.82 | 0.82 | 0.86 | 0.86 | 0.86 | 0.86 | 0.87 |
| | 47°F(8.3°C) | TC | 14472 | 14491 | 14507 | 14508 | 14527 | 15344 | 15362 | 15377 | 15380 | 15399 | 16261 | 16282 | 16300 | 16303 | 16321 | 17240 | 17259 | 17278 | 17281 | 17302 |
| | | S/T | 0.48 | 0.56 | 0.64 | 0.64 | 0.73 | 0.51 | 0.60 | 0.68 | 0.68 | 0.77 | 0.54 | 0.63 | 0.72 | 0.72 | 0.82 | 0.57 | 0.67 | 0.76 | 0.76 | 0.87 |
| | | PI | 0.63 | 0.64 | 0.64 | 0.64 | 0.64 | 0.67 | 0.67 | 0.67 | 0.67 | 0.67 | 0.71 | 0.71 | 0.71 | 0.71 | 0.72 | 0.76 | 0.76 | 0.76 | 0.76 | 0.76 |
| | 50°F(10.0°C) | TC | 14621 | 14640 | 14656 | 14657 | 14676 | 15502 | 15520 | 15535 | 15538 | 15557 | 16428 | 16449 | 16467 | 16471 | 16489 | 17418 | 17437 | 17456 | 17458 | 17480 |
| | | S/T | 0.48 | 0.57 | 0.64 | 0.64 | 0.73 | 0.51 | 0.60 | 0.68 | 0.68 | 0.78 | 0.54 | 0.64 | 0.72 | 0.72 | 0.82 | 0.58 | 0.67 | 0.77 | 0.77 | 0.87 |
| | | PI | 0.65 | 0.65 | 0.65 | 0.65 | 0.65 | 0.69 | 0.69 | 0.69 | 0.69 | 0.69 | 0.73 | 0.73 | 0.73 | 0.73 | 0.73 | 0.77 | 0.77 | 0.77 | 0.77 | 0.77 |

Manufacturer reserves the right to change, at any time, specifications and designs without notice and without obligations.

# Table 9: Cooling Performance 18K (Continued)

| AIRFLOW (CFM) | OUTDOOR DB °F (℃) | ID WB°F (℃) | 60.8°F(16.0℃) | | | | | 64.4°F(18.0℃) | | | | | 67°F(19.4℃) | | | | | 71.6°F(22.0℃) | | | | |
|---|---|---|---|---|---|---|---|---|---|---|---|---|---|---|---|---|---|---|---|---|---|---|
| | | ID DB°F (℃) | 73.4°F (23.0℃) | 77.0°F (25.0℃) | 80.0°F (26.7℃) | 80.6°F (27.0℃) | 84.2°F (29.0℃) | 73.4°F (23.0℃) | 77.0°F (25.0℃) | 80.0°F 26.7℃) | 80.6°F (27.0℃) | 84.2°F (29.0℃) | 73.4°F (23.0℃) | 77.0°F (25.0℃) | 80.0°F (26.7℃) | 80.6°F (27.0℃) | 84.2°F (29.0℃) | 73.4°F (23.0℃) | 77.0°F( 25.0℃) | 80.0°F (26.7℃) | 80.6°F (27.0℃) | 84.2°F (29.0℃) |
| 471 | 59°F(15.0℃) | TC | 15067 | 15087 | 15103 | 15104 | 15124 | 15975 | 15994 | 16009 | 16013 | 16032 | 16929 | 16951 | 16970 | 16973 | 16992 | 17949 | 17969 | 17988 | 17991 | 18013 |
| | | S/T | 0.49 | 0.57 | 0.65 | 0.65 | 0.74 | 0.51 | 0.60 | 0.69 | 0.69 | 0.78 | 0.55 | 0.64 | 0.73 | 0.73 | 0.83 | 0.58 | 0.68 | 0.77 | 0.77 | 0.88 |
| | | PI | 0.68 | 0.68 | 0.68 | 0.68 | 0.68 | 0.72 | 0.72 | 0.72 | 0.72 | 0.73 | 0.77 | 0.77 | 0.77 | 0.77 | 0.77 | 0.81 | 0.81 | 0.81 | 0.81 | 0.81 |
| | 68°F(20.0℃) | TC | 15513 | 15534 | 15550 | 15551 | 15572 | 16448 | 16467 | 16483 | 16487 | 16506 | 17430 | 17453 | 17472 | 17476 | 17495 | 18481 | 18501 | 18521 | 18524 | 18547 |
| | | S/T | 0.50 | 0.58 | 0.66 | 0.66 | 0.76 | 0.53 | 0.62 | 0.70 | 0.70 | 0.80 | 0.56 | 0.66 | 0.75 | 0.75 | 0.85 | 0.59 | 0.70 | 0.79 | 0.79 | 0.90 |
| | | PI | 0.72 | 0.72 | 0.72 | 0.72 | 0.72 | 0.76 | 0.76 | 0.76 | 0.76 | 0.76 | 0.81 | 0.81 | 0.81 | 0.81 | 0.81 | 0.85 | 0.85 | 0.86 | 0.86 | 0.86 |
| | 77°F(25.0℃) | TC | 15959 | 15980 | 15998 | 15998 | 16020 | 16921 | 16941 | 16957 | 16961 | 16981 | 17932 | 17955 | 17975 | 17978 | 17998 | 19012 | 19033 | 19053 | 19056 | 19080 |
| | | S/T | 0.50 | 0.59 | 0.67 | 0.67 | 0.77 | 0.54 | 0.63 | 0.71 | 0.71 | 0.81 | 0.57 | 0.67 | 0.76 | 0.76 | 0.86 | 0.60 | 0.71 | 0.80 | 0.80 | 0.91 |
| | | PI | 0.75 | 0.75 | 0.75 | 0.75 | 0.76 | 0.80 | 0.80 | 0.80 | 0.80 | 0.80 | 0.85 | 0.85 | 0.85 | 0.85 | 0.85 | 0.90 | 0.90 | 0.90 | 0.90 | 0.90 |
| | 82°F(27.8℃) | TC | 16074 | 16096 | 16113 | 16114 | 16135 | 17043 | 17063 | 17080 | 17083 | 17103 | 18061 | 18084 | 18105 | 18108 | 18128 | 19149 | 19170 | 19191 | 19194 | 19218 |
| | | S/T | 0.51 | 0.60 | 0.68 | 0.68 | 0.78 | 0.54 | 0.64 | 0.72 | 0.72 | 0.82 | 0.57 | 0.67 | 0.77 | 0.77 | 0.87 | 0.61 | 0.71 | 0.81 | 0.81 | 0.93 |
| | | PI | 0.84 | 0.85 | 0.85 | 0.85 | 0.85 | 0.90 | 0.90 | 0.90 | 0.90 | 0.90 | 0.95 | 0.95 | 0.95 | 0.95 | 0.95 | 1.01 | 1.01 | 1.01 | 1.01 | 1.01 |
| | 86°F(30.0℃) | TC | 15999 | 16020 | 16037 | 16038 | 16060 | 16963 | 16983 | 17000 | 17003 | 17023 | 17976 | 18000 | 18020 | 18023 | 18043 | 19059 | 19080 | 19101 | 19104 | 19128 |
| | | S/T | 0.52 | 0.61 | 0.69 | 0.69 | 0.79 | 0.55 | 0.64 | 0.73 | 0.73 | 0.83 | 0.58 | 0.68 | 0.78 | 0.78 | 0.88 | 0.62 | 0.72 | 0.82 | 0.82 | 0.94 |
| | | PI | 1.01 | 1.01 | 1.01 | 1.01 | 1.01 | 1.07 | 1.07 | 1.07 | 1.07 | 1.07 | 1.13 | 1.14 | 1.14 | 1.14 | 1.14 | 1.20 | 1.20 | 1.21 | 1.21 | 1.21 |
| | 95°F(35.0℃) | TC | 15829 | 15850 | 15868 | 15868 | 15890 | 16783 | 16803 | 16820 | 16823 | 16843 | 17786 | 17809 | 17829 | 17832 | 17852 | 18857 | 18878 | 18899 | 18901 | 18925 |
| | | S/T | 0.52 | 0.61 | 0.69 | 0.69 | 0.79 | 0.55 | 0.64 | 0.73 | 0.73 | 0.83 | 0.58 | 0.68 | 0.78 | 0.78 | 0.88 | 0.62 | 0.72 | 0.82 | 0.82 | 0.94 |
| | | PI | 1.38 | 1.38 | 1.38 | 1.38 | 1.39 | 1.46 | 1.47 | 1.47 | 1.47 | 1.47 | 1.55 | 1.55 | 1.56 | 1.56 | 1.56 | 1.65 | 1.65 | 1.65 | 1.65 | 1.65 |
| | 104°F(40.0℃) | TC | 13916 | 13935 | 13950 | 13951 | 13970 | 14755 | 14772 | 14787 | 14790 | 14808 | 15637 | 15657 | 15674 | 15677 | 15695 | 16579 | 16597 | 16615 | 16617 | 16638 |
| | | S/T | 0.53 | 0.62 | 0.71 | 0.71 | 0.81 | 0.56 | 0.66 | 0.75 | 0.75 | 0.85 | 0.60 | 0.70 | 0.79 | 0.79 | 0.91 | 0.63 | 0.74 | 0.84 | 0.84 | 0.96 |
| | | PI | 1.35 | 1.36 | 1.36 | 1.36 | 1.36 | 1.44 | 1.44 | 1.44 | 1.44 | 1.44 | 1.52 | 1.52 | 1.53 | 1.53 | 1.53 | 1.61 | 1.62 | 1.62 | 1.62 | 1.62 |
| | 110°F(43.0℃) | TC | 12769 | 12786 | 12800 | 12800 | 12817 | 13538 | 13554 | 13568 | 13570 | 13586 | 14347 | 14366 | 14382 | 14384 | 14400 | 15211 | 15228 | 15244 | 15247 | 15266 |
| | | S/T | 0.55 | 0.65 | 0.73 | 0.73 | 0.84 | 0.58 | 0.68 | 0.78 | 0.78 | 0.89 | 0.62 | 0.73 | 0.82 | 0.82 | 0.94 | 0.66 | 0.77 | 0.87 | 0.87 | 1.00 |
| | | PI | 1.34 | 1.34 | 1.34 | 1.34 | 1.34 | 1.42 | 1.42 | 1.42 | 1.42 | 1.42 | 1.50 | 1.51 | 1.51 | 1.51 | 1.51 | 1.59 | 1.60 | 1.60 | 1.60 | 1.60 |
| | 115°F(46.0℃) | TC | 10277 | 10290 | 10302 | 10302 | 10316 | 10896 | 10909 | 10920 | 10922 | 10935 | 11547 | 11562 | 11575 | 11577 | 11590 | 12243 | 12256 | 12269 | 12271 | 12287 |
| | | S/T | 0.56 | 0.65 | 0.74 | 0.74 | 0.85 | 0.59 | 0.69 | 0.79 | 0.79 | 0.90 | 0.63 | 0.73 | 0.83 | 0.83 | 0.95 | 0.66 | 0.78 | 0.88 | 0.88 | 1.00 |
| | | PI | 1.12 | 1.12 | 1.12 | 1.12 | 1.13 | 1.19 | 1.19 | 1.19 | 1.19 | 1.19 | 1.26 | 1.26 | 1.26 | 1.26 | 1.26 | 1.34 | 1.34 | 1.34 | 1.34 | 1.34 |
| | 122°F(50.0℃) | TC | 6954 | 6963 | 6971 | 6971 | 6981 | 7373 | 7382 | 7389 | 7391 | 7399 | 7814 | 7824 | 7832 | 7834 | 7843 | 8284 | 8293 | 8302 | 8304 | 8314 |
| | | S/T | 0.57 | 0.67 | 0.76 | 0.76 | 0.87 | 0.60 | 0.71 | 0.80 | 0.80 | 0.92 | 0.64 | 0.75 | 0.85 | 0.85 | 0.97 | 0.68 | 0.80 | 0.90 | 0.90 | 1.00 |
| | | PI | 0.83 | 0.83 | 0.83 | 0.83 | 0.83 | 0.88 | 0.88 | 0.88 | 0.88 | 0.88 | 0.93 | 0.94 | 0.94 | 0.94 | 0.94 | 0.99 | 0.99 | 0.99 | 0.99 | 0.99 |
| 500 | 5°F(-15.0℃) | TC | 16716 | 16738 | 16756 | 16757 | 16780 | 17723 | 17744 | 17762 | 17765 | 17786 | 18782 | 18806 | 18827 | 18831 | 18852 | 19914 | 19935 | 19957 | 19960 | 19985 |
| | | S/T | 0.49 | 0.57 | 0.65 | 0.65 | 0.74 | 0.51 | 0.60 | 0.69 | 0.69 | 0.78 | 0.55 | 0.64 | 0.73 | 0.73 | 0.83 | 0.58 | 0.68 | 0.77 | 0.77 | 0.88 |
| | | PI | 0.98 | 0.98 | 0.98 | 0.98 | 0.98 | 1.04 | 1.04 | 1.04 | 1.04 | 1.04 | 1.10 | 1.10 | 1.10 | 1.10 | 1.10 | 1.16 | 1.17 | 1.17 | 1.17 | 1.17 |

Manufacturer reserves the right to change, at any time, specifications and designs without notice and without obligations.

# Table 9: Cooling Performance 18K (Continued)

| AIRFLOW (CFM) | OUTDOOR DB °F (℃) | ID WB°F (℃) | 60.8°F(16.0℃) | | | | | 64.4°F(18.0℃) | | | | | 67°F(19.4℃) | | | | | 71.6°F(22.0℃) | | | | |
|---|---|---|---|---|---|---|---|---|---|---|---|---|---|---|---|---|---|---|---|---|---|---|
| | | ID DB°F (℃) | 73.4°F (23.0℃) | 77.0°F (25.0℃) | 80.0°F (26.7℃) | 80.6°F (27.0℃) | 84.2°F (29.0℃) | 73.4°F (23.0℃) | 77.0°F (25.0℃) | 80.0°F 26.7℃) | 80.6°F (27.0℃) | 84.2°F (29.0℃) | 73.4°F (23.0℃) | 77.0°F (25.0℃) | 80.0°F (26.7℃) | 80.6°F (27.0℃) | 84.2°F (29.0℃) | 73.4°F (23.0℃) | 77.0°F( 25.0℃) | 80.0°F (26.7℃) | 80.6°F (27.0℃) | 84.2°F (29.0℃) |
| 500 | 14°F(-10.0℃) | TC | 17098 | 17121 | 17139 | 17140 | 17163 | 18128 | 18149 | 18167 | 18171 | 18192 | 19211 | 19236 | 19257 | 19261 | 19282 | 20368 | 20391 | 20413 | 20416 | 20441 |
| | | S/T | 0.49 | 0.57 | 0.65 | 0.65 | 0.74 | 0.52 | 0.61 | 0.69 | 0.69 | 0.78 | 0.55 | 0.64 | 0.73 | 0.73 | 0.83 | 0.58 | 0.68 | 0.77 | 0.77 | 0.88 |
| | | PI | 0.97 | 0.97 | 0.97 | 0.97 | 0.97 | 1.02 | 1.02 | 1.03 | 1.03 | 1.03 | 1.08 | 1.09 | 1.09 | 1.09 | 1.09 | 1.15 | 1.15 | 1.15 | 1.15 | 1.15 |
| | 17°F(-8.3℃) | TC | 17225 | 17248 | 17266 | 17267 | 17291 | 18263 | 18284 | 18302 | 18306 | 18328 | 19354 | 19379 | 19401 | 19404 | 19426 | 20520 | 20542 | 20565 | 20568 | 20593 |
| | | S/T | 0.49 | 0.57 | 0.65 | 0.65 | 0.74 | 0.52 | 0.61 | 0.69 | 0.69 | 0.79 | 0.55 | 0.64 | 0.73 | 0.73 | 0.83 | 0.58 | 0.68 | 0.78 | 0.78 | 0.88 |
| | | PI | 0.96 | 0.96 | 0.96 | 0.96 | 0.97 | 1.02 | 1.02 | 1.02 | 1.02 | 1.02 | 1.08 | 1.08 | 1.08 | 1.08 | 1.08 | 1.15 | 1.15 | 1.15 | 1.15 | 1.15 |
| | 23°F(-5.0℃) | TC | 17849 | 17873 | 17892 | 17893 | 17917 | 18924 | 18947 | 18966 | 18969 | 18992 | 20055 | 20081 | 20104 | 20107 | 20130 | 21263 | 21287 | 21310 | 21313 | 21340 |
| | | S/T | 0.49 | 0.58 | 0.65 | 0.65 | 0.75 | 0.52 | 0.61 | 0.69 | 0.69 | 0.79 | 0.55 | 0.65 | 0.74 | 0.74 | 0.84 | 0.58 | 0.69 | 0.78 | 0.78 | 0.89 |
| | | PI | 0.92 | 0.92 | 0.92 | 0.92 | 0.92 | 0.98 | 0.98 | 0.98 | 0.98 | 0.98 | 1.03 | 1.04 | 1.04 | 1.04 | 1.04 | 1.10 | 1.10 | 1.10 | 1.10 | 1.10 |
| | 35°F(1.7℃) | TC | 19097 | 19123 | 19143 | 19144 | 19170 | 20248 | 20272 | 20292 | 20296 | 20320 | 21457 | 21485 | 21509 | 21513 | 21537 | 22750 | 22775 | 22800 | 22803 | 22832 |
| | | S/T | 0.49 | 0.58 | 0.66 | 0.66 | 0.75 | 0.52 | 0.61 | 0.70 | 0.70 | 0.79 | 0.55 | 0.65 | 0.74 | 0.74 | 0.84 | 0.59 | 0.69 | 0.78 | 0.78 | 0.89 |
| | | PI | 0.84 | 0.84 | 0.84 | 0.84 | 0.84 | 0.89 | 0.89 | 0.89 | 0.89 | 0.89 | 0.94 | 0.94 | 0.95 | 0.95 | 0.95 | 1.00 | 1.00 | 1.00 | 1.00 | 1.00 |
| | 41°F(5.0℃) | TC | 17013 | 17036 | 17054 | 17055 | 17078 | 18038 | 18059 | 18077 | 18081 | 18102 | 19116 | 19140 | 19162 | 19165 | 19187 | 20267 | 20289 | 20311 | 20315 | 20340 |
| | | S/T | 0.49 | 0.58 | 0.66 | 0.66 | 0.75 | 0.52 | 0.61 | 0.70 | 0.70 | 0.80 | 0.56 | 0.65 | 0.74 | 0.74 | 0.84 | 0.59 | 0.69 | 0.78 | 0.78 | 0.89 |
| | | PI | 0.75 | 0.75 | 0.75 | 0.75 | 0.75 | 0.79 | 0.79 | 0.79 | 0.79 | 0.79 | 0.84 | 0.84 | 0.84 | 0.84 | 0.84 | 0.89 | 0.89 | 0.89 | 0.89 | 0.89 |
| | 47°F(8.3℃) | TC | 14929 | 14949 | 14965 | 14965 | 14986 | 15828 | 15847 | 15863 | 15866 | 15885 | 16774 | 16796 | 16814 | 16817 | 16836 | 17784 | 17804 | 17823 | 17826 | 17848 |
| | | S/T | 0.50 | 0.58 | 0.66 | 0.66 | 0.75 | 0.53 | 0.62 | 0.70 | 0.70 | 0.80 | 0.56 | 0.65 | 0.74 | 0.74 | 0.85 | 0.59 | 0.69 | 0.79 | 0.79 | 0.90 |
| | | PI | 0.65 | 0.66 | 0.66 | 0.66 | 0.66 | 0.69 | 0.69 | 0.70 | 0.70 | 0.70 | 0.74 | 0.74 | 0.74 | 0.74 | 0.74 | 0.78 | 0.78 | 0.78 | 0.78 | 0.78 |
| | 50°F(10.0℃) | TC | 15082 | 15102 | 15118 | 15119 | 15140 | 15991 | 16010 | 16026 | 16029 | 16048 | 16946 | 16968 | 16987 | 16990 | 17009 | 17967 | 17987 | 18006 | 18009 | 18032 |
| | | S/T | 0.50 | 0.58 | 0.66 | 0.66 | 0.76 | 0.53 | 0.62 | 0.70 | 0.70 | 0.80 | 0.56 | 0.66 | 0.75 | 0.75 | 0.85 | 0.59 | 0.70 | 0.79 | 0.79 | 0.90 |
| | | PI | 0.67 | 0.67 | 0.67 | 0.67 | 0.67 | 0.71 | 0.71 | 0.71 | 0.71 | 0.71 | 0.75 | 0.75 | 0.75 | 0.75 | 0.75 | 0.79 | 0.79 | 0.80 | 0.80 | 0.80 |
| | 59°F(15.0℃) | TC | 15542 | 15563 | 15580 | 15580 | 15601 | 16479 | 16498 | 16515 | 16518 | 16537 | 17463 | 17486 | 17505 | 17509 | 17528 | 18515 | 18536 | 18556 | 18559 | 18582 |
| | | S/T | 0.50 | 0.59 | 0.67 | 0.67 | 0.76 | 0.53 | 0.62 | 0.71 | 0.71 | 0.81 | 0.56 | 0.66 | 0.75 | 0.75 | 0.86 | 0.60 | 0.70 | 0.80 | 0.80 | 0.91 |
| | | PI | 0.70 | 0.70 | 0.70 | 0.70 | 0.71 | 0.75 | 0.75 | 0.75 | 0.75 | 0.75 | 0.79 | 0.79 | 0.79 | 0.79 | 0.79 | 0.84 | 0.84 | 0.84 | 0.84 | 0.84 |
| | 68°F(20.0℃) | TC | 16002 | 16024 | 16041 | 16042 | 16063 | 16967 | 16987 | 17003 | 17007 | 17027 | 17980 | 18004 | 18024 | 18027 | 18047 | 19064 | 19084 | 19105 | 19108 | 19132 |
| | | S/T | 0.51 | 0.60 | 0.69 | 0.69 | 0.78 | 0.54 | 0.64 | 0.73 | 0.73 | 0.83 | 0.58 | 0.68 | 0.77 | 0.77 | 0.88 | 0.61 | 0.72 | 0.82 | 0.82 | 0.93 |
| | | PI | 0.74 | 0.74 | 0.74 | 0.74 | 0.74 | 0.78 | 0.78 | 0.79 | 0.79 | 0.79 | 0.83 | 0.83 | 0.83 | 0.83 | 0.83 | 0.88 | 0.88 | 0.88 | 0.88 | 0.88 |
| | 77°F(25.0℃) | TC | 16462 | 16485 | 16502 | 16503 | 16525 | 17455 | 17475 | 17492 | 17496 | 17517 | 18497 | 18521 | 18542 | 18545 | 18566 | 19612 | 19633 | 19655 | 19658 | 19682 |
| | | S/T | 0.52 | 0.61 | 0.69 | 0.69 | 0.79 | 0.55 | 0.65 | 0.74 | 0.74 | 0.84 | 0.59 | 0.69 | 0.78 | 0.78 | 0.89 | 0.62 | 0.73 | 0.83 | 0.83 | 0.94 |
| | | PI | 0.78 | 0.78 | 0.78 | 0.78 | 0.78 | 0.82 | 0.82 | 0.82 | 0.82 | 0.83 | 0.87 | 0.87 | 0.87 | 0.87 | 0.88 | 0.92 | 0.93 | 0.93 | 0.93 | 0.93 |
| | 82°F(27.8℃) | TC | 16581 | 16603 | 16621 | 16622 | 16645 | 17580 | 17601 | 17619 | 17622 | 17643 | 18631 | 18655 | 18676 | 18679 | 18700 | 19753 | 19775 | 19796 | 19799 | 19824 |
| | | S/T | 0.53 | 0.62 | 0.70 | 0.70 | 0.80 | 0.56 | 0.66 | 0.75 | 0.75 | 0.85 | 0.59 | 0.70 | 0.79 | 0.79 | 0.90 | 0.63 | 0.74 | 0.84 | 0.84 | 0.95 |
| | | PI | 0.87 | 0.87 | 0.87 | 0.87 | 0.87 | 0.92 | 0.92 | 0.93 | 0.93 | 0.93 | 0.98 | 0.98 | 0.98 | 0.98 | 0.98 | 1.04 | 1.04 | 1.04 | 1.04 | 1.04 |

Manufacturer reserves the right to change, at any time, specifications and designs without notice and without obligations.

# Table 9: Cooling Performance 18K (Continued)

| AIRFLOW (CFM) | OUTDOOR DB °F (℃) | ID WB°F (℃) | 60.8°F(16.0℃) | | | | | 64.4°F(18.0℃) | | | | | 67°F(19.4℃) | | | | | 71.6°F(22.0℃) | | | | |
|---|---|---|---|---|---|---|---|---|---|---|---|---|---|---|---|---|---|---|---|---|---|---|
| | | ID DB°F (℃) | 73.4°F (23.0℃) | 77.0°F (25.0℃) | 80.0°F (26.7℃) | 80.6°F (27.0℃) | 84.2°F (29.0℃) | 73.4°F (23.0℃) | 77.0°F (25.0℃) | 80.0°F 26.7℃) | 80.6°F (27.0℃) | 84.2°F (29.0℃) | 73.4°F (23.0℃) | 77.0°F (25.0℃) | 80.0°F (26.7℃) | 80.6°F (27.0℃) | 84.2°F (29.0℃) | 73.4°F (23.0℃) | 77.0°F( 25.0℃) | 80.0°F (26.7℃) | 80.6°F (27.0℃) | 84.2°F (29.0℃) |
| 500 | 86°F(30.0℃) | TC | 16503 | 16526 | 16543 | 16544 | 16567 | 17498 | 17519 | 17536 | 17540 | 17560 | 18543 | 18568 | 18588 | 18592 | 18612 | 19661 | 19682 | 19704 | 19707 | 19731 |
| | | S/T | 0.53 | 0.63 | 0.71 | 0.71 | 0.81 | 0.57 | 0.66 | 0.75 | 0.75 | 0.86 | 0.60 | 0.70 | 0.80 | 0.80 | 0.91 | 0.64 | 0.75 | 0.85 | 0.85 | 0.97 |
| | | PI | 1.04 | 1.04 | 1.04 | 1.04 | 1.05 | 1.10 | 1.11 | 1.11 | 1.11 | 1.11 | 1.17 | 1.17 | 1.17 | 1.17 | 1.17 | 1.24 | 1.24 | 1.24 | 1.24 | 1.25 |
| | 95°F(35.0℃) | TC | 16329 | 16351 | 16368 | 16369 | 16391 | 17313 | 17333 | 17350 | 17354 | 17374 | 18347 | 18371 | 18391 | 18395 | 18415 | 19453 | 19474 | 19495 | 19498 | 19522 |
| | | S/T | 0.53 | 0.63 | 0.71 | 0.71 | 0.81 | 0.57 | 0.66 | 0.75 | 0.75 | 0.86 | 0.60 | 0.70 | 0.80 | 0.80 | 0.91 | 0.64 | 0.75 | 0.85 | 0.85 | 0.97 |
| | | PI | 1.42 | 1.43 | 1.43 | 1.43 | 1.43 | 1.51 | 1.51 | 1.51 | 1.51 | 1.52 | 1.60 | 1.60 | 1.61 | 1.61 | 1.61 | 1.70 | 1.70 | 1.70 | 1.70 | 1.70 |
| | 104°F(40.0℃) | TC | 14355 | 14375 | 14390 | 14391 | 14410 | 15221 | 15239 | 15254 | 15257 | 15275 | 16130 | 16151 | 16169 | 16172 | 16190 | 17102 | 17120 | 17139 | 17142 | 17163 |
| | | S/T | 0.55 | 0.64 | 0.73 | 0.73 | 0.83 | 0.58 | 0.68 | 0.77 | 0.77 | 0.88 | 0.62 | 0.72 | 0.82 | 0.82 | 0.93 | 0.65 | 0.76 | 0.87 | 0.87 | 0.99 |
| | | PI | 1.40 | 1.40 | 1.40 | 1.40 | 1.40 | 1.48 | 1.48 | 1.48 | 1.48 | 1.49 | 1.57 | 1.57 | 1.57 | 1.57 | 1.58 | 1.66 | 1.67 | 1.67 | 1.67 | 1.67 |
| | 110°F(43.0℃) | TC | 13172 | 13189 | 13203 | 13204 | 13222 | 13965 | 13982 | 13996 | 13998 | 14015 | 14800 | 14819 | 14835 | 14838 | 14855 | 15691 | 15708 | 15725 | 15728 | 15748 |
| | | S/T | 0.57 | 0.67 | 0.76 | 0.76 | 0.86 | 0.60 | 0.71 | 0.80 | 0.80 | 0.91 | 0.64 | 0.75 | 0.85 | 0.85 | 0.97 | 0.68 | 0.79 | 0.90 | 0.90 | 1.00 |
| | | PI | 1.38 | 1.38 | 1.38 | 1.38 | 1.39 | 1.46 | 1.47 | 1.47 | 1.47 | 1.47 | 1.55 | 1.55 | 1.56 | 1.56 | 1.56 | 1.64 | 1.65 | 1.65 | 1.65 | 1.65 |
| | 115°F(46.0℃) | TC | 10601 | 10615 | 10627 | 10627 | 10641 | 11240 | 11253 | 11264 | 11266 | 11280 | 11911 | 11927 | 11940 | 11942 | 11956 | 12629 | 12643 | 12656 | 12658 | 12674 |
| | | S/T | 0.57 | 0.67 | 0.77 | 0.77 | 0.87 | 0.61 | 0.71 | 0.81 | 0.81 | 0.92 | 0.65 | 0.76 | 0.86 | 0.86 | 0.98 | 0.68 | 0.80 | 0.91 | 0.91 | 1.00 |
| | | PI | 1.16 | 1.16 | 1.16 | 1.16 | 1.16 | 1.23 | 1.23 | 1.23 | 1.23 | 1.23 | 1.30 | 1.30 | 1.30 | 1.30 | 1.30 | 1.38 | 1.38 | 1.38 | 1.38 | 1.38 |
| | 122°F(50.0℃) | TC | 7173 | 7183 | 7191 | 7191 | 7201 | 7606 | 7615 | 7622 | 7624 | 7633 | 8060 | 8071 | 8080 | 8081 | 8090 | 8546 | 8555 | 8564 | 8566 | 8576 |
| | | S/T | 0.59 | 0.69 | 0.78 | 0.78 | 0.89 | 0.62 | 0.73 | 0.83 | 0.83 | 0.95 | 0.66 | 0.77 | 0.88 | 0.88 | 1.00 | 0.70 | 0.82 | 0.93 | 0.93 | 1.00 |
| | | PI | 0.86 | 0.86 | 0.86 | 0.86 | 0.86 | 0.91 | 0.91 | 0.91 | 0.91 | 0.91 | 0.96 | 0.96 | 0.97 | 0.97 | 0.97 | 1.02 | 1.02 | 1.02 | 1.02 | 1.03 |

## LEGEND

TC: Total Cooling Capacity (BTU/hr)
S/T: Sensible Cooling Capacity Ratio
PI: Power Input (kW)

Manufacturer reserves the right to change, at any time, specifications and designs without notice and without obligations.

# Table 10: Cooling Performance 24K

| AIRFLOW (CFM) | OUTDOOR DB °F (°C) | ID WB°F (°C) | 60.8°F(16.0°C) | | | | | 64.4°F(18.0°C) | | | | | 67°F(19.4°C) | | | | | 71.6°F(22.0°C) | | | | |
|---|---|---|---|---|---|---|---|---|---|---|---|---|---|---|---|---|---|---|---|---|---|---|
| | | ID DB°F (°C) | 73.4°F (23.0°C) | 77.0°F (25.0°C) | 80.0°F (26.7°C) | 80.6°F (27.0°C) | 84.2°F (29.0°C) | 73.4°F (23.0°C) | 77.0°F (25.0°C) | 80.0°F 26.7°C) | 80.6°F (27.0°C) | 84.2°F (29.0°C) | 73.4°F (23.0°C) | 77.0°F (25.0°C) | 80.0°F (26.7°C) | 80.6°F (27.0°C) | 84.2°F (29.0°C) | 73.4°F (23.0°C) | 77.0°F( 25.0°C) | 80.0°F (26.7°C) | 80.6°F (27.0°C) | 84.2°F (29.0°C) |
| 400 | 5°F(-15.0°C) | TC | 7946 | 7957 | 7965 | 7966 | 7977 | 8425 | 8435 | 8443 | 8445 | 8455 | 8928 | 8940 | 8950 | 8952 | 8962 | 9466 | 9477 | 9487 | 9488 | 9500 |
| | | S/T | 0.31 | 0.36 | 0.41 | 0.41 | 0.47 | 0.33 | 0.38 | 0.43 | 0.43 | 0.49 | 0.35 | 0.40 | 0.46 | 0.46 | 0.52 | 0.37 | 0.43 | 0.49 | 0.49 | 0.56 |
| | | PI | 0.81 | 0.82 | 0.82 | 0.82 | 0.82 | 0.86 | 0.86 | 0.87 | 0.87 | 0.87 | 0.92 | 0.92 | 0.92 | 0.92 | 0.92 | 0.97 | 0.97 | 0.97 | 0.97 | 0.97 |
| | 14°F(-10.0°C) | TC | 11004 | 11019 | 11031 | 11032 | 11047 | 11668 | 11681 | 11693 | 11695 | 11709 | 12365 | 12381 | 12395 | 12397 | 12411 | 13110 | 13124 | 13138 | 13140 | 13157 |
| | | S/T | 0.31 | 0.36 | 0.41 | 0.41 | 0.47 | 0.33 | 0.38 | 0.44 | 0.44 | 0.50 | 0.35 | 0.41 | 0.46 | 0.46 | 0.53 | 0.37 | 0.43 | 0.49 | 0.49 | 0.56 |
| | | PI | 0.48 | 0.48 | 0.48 | 0.48 | 0.48 | 0.51 | 0.51 | 0.51 | 0.51 | 0.51 | 0.54 | 0.54 | 0.54 | 0.54 | 0.54 | 0.57 | 0.57 | 0.57 | 0.57 | 0.57 |
| | 17°F(-8.3°C) | TC | 12024 | 12040 | 12053 | 12054 | 12070 | 12749 | 12764 | 12776 | 12779 | 12794 | 13510 | 13528 | 13543 | 13545 | 13560 | 14324 | 14340 | 14355 | 14358 | 14375 |
| | | S/T | 0.31 | 0.36 | 0.41 | 0.41 | 0.47 | 0.33 | 0.38 | 0.44 | 0.44 | 0.50 | 0.35 | 0.41 | 0.46 | 0.46 | 0.53 | 0.37 | 0.43 | 0.49 | 0.49 | 0.56 |
| | | PI | 0.37 | 0.37 | 0.37 | 0.37 | 0.37 | 0.39 | 0.39 | 0.39 | 0.39 | 0.39 | 0.41 | 0.41 | 0.41 | 0.41 | 0.41 | 0.44 | 0.44 | 0.44 | 0.44 | 0.44 |
| | 23°F(-5.0°C) | TC | 12162 | 12179 | 12192 | 12192 | 12209 | 12895 | 12911 | 12923 | 12926 | 12941 | 13666 | 13683 | 13699 | 13701 | 13717 | 14489 | 14505 | 14521 | 14523 | 14541 |
| | | S/T | 0.31 | 0.36 | 0.41 | 0.41 | 0.47 | 0.33 | 0.39 | 0.44 | 0.44 | 0.50 | 0.35 | 0.41 | 0.46 | 0.46 | 0.53 | 0.37 | 0.43 | 0.49 | 0.49 | 0.56 |
| | | PI | 0.47 | 0.47 | 0.48 | 0.48 | 0.48 | 0.50 | 0.50 | 0.50 | 0.50 | 0.50 | 0.53 | 0.53 | 0.53 | 0.53 | 0.53 | 0.56 | 0.57 | 0.57 | 0.57 | 0.57 |
| | 35°F(1.7°C) | TC | 12439 | 12456 | 12469 | 12470 | 12487 | 13189 | 13204 | 13217 | 13220 | 13236 | 13977 | 13995 | 14010 | 14013 | 14029 | 14819 | 14835 | 14851 | 14853 | 14872 |
| | | S/T | 0.31 | 0.37 | 0.42 | 0.42 | 0.47 | 0.33 | 0.39 | 0.44 | 0.44 | 0.50 | 0.35 | 0.41 | 0.47 | 0.47 | 0.53 | 0.37 | 0.44 | 0.50 | 0.50 | 0.56 |
| | | PI | 0.69 | 0.69 | 0.69 | 0.69 | 0.69 | 0.73 | 0.73 | 0.73 | 0.73 | 0.73 | 0.78 | 0.78 | 0.78 | 0.78 | 0.78 | 0.82 | 0.82 | 0.82 | 0.82 | 0.83 |
| | 41°F(5.0°C) | TC | 12407 | 12424 | 12437 | 12438 | 12454 | 13155 | 13170 | 13183 | 13186 | 13202 | 13941 | 13959 | 13974 | 13977 | 13993 | 14781 | 14797 | 14813 | 14815 | 14834 |
| | | S/T | 0.31 | 0.37 | 0.42 | 0.42 | 0.47 | 0.33 | 0.39 | 0.44 | 0.44 | 0.50 | 0.35 | 0.41 | 0.47 | 0.47 | 0.53 | 0.37 | 0.44 | 0.50 | 0.50 | 0.57 |
| | | PI | 0.70 | 0.70 | 0.70 | 0.70 | 0.70 | 0.74 | 0.74 | 0.74 | 0.74 | 0.74 | 0.79 | 0.79 | 0.79 | 0.79 | 0.79 | 0.83 | 0.83 | 0.84 | 0.84 | 0.84 |
| | 47°F(8.3°C) | TC | 12375 | 12392 | 12405 | 12406 | 12422 | 13121 | 13136 | 13149 | 13152 | 13168 | 13905 | 13923 | 13938 | 13941 | 13957 | 14743 | 14759 | 14775 | 14777 | 14795 |
| | | S/T | 0.31 | 0.37 | 0.42 | 0.42 | 0.48 | 0.33 | 0.39 | 0.44 | 0.44 | 0.50 | 0.35 | 0.41 | 0.47 | 0.47 | 0.54 | 0.37 | 0.44 | 0.50 | 0.50 | 0.57 |
| | | PI | 0.71 | 0.71 | 0.71 | 0.71 | 0.71 | 0.75 | 0.75 | 0.75 | 0.75 | 0.75 | 0.80 | 0.80 | 0.80 | 0.80 | 0.80 | 0.84 | 0.84 | 0.85 | 0.85 | 0.85 |
| | 50°F(10.0°C) | TC | 12517 | 12534 | 12548 | 12548 | 12565 | 13272 | 13287 | 13300 | 13303 | 13319 | 14065 | 14083 | 14099 | 14101 | 14117 | 14912 | 14928 | 14944 | 14947 | 14965 |
| | | S/T | 0.31 | 0.37 | 0.42 | 0.42 | 0.48 | 0.33 | 0.39 | 0.45 | 0.45 | 0.51 | 0.35 | 0.42 | 0.47 | 0.47 | 0.54 | 0.38 | 0.44 | 0.50 | 0.50 | 0.57 |
| | | PI | 0.71 | 0.71 | 0.71 | 0.71 | 0.72 | 0.76 | 0.76 | 0.76 | 0.76 | 0.76 | 0.80 | 0.80 | 0.80 | 0.80 | 0.80 | 0.85 | 0.85 | 0.85 | 0.85 | 0.85 |
| | 59°F(15.0°C) | TC | 12944 | 12961 | 12975 | 12976 | 12993 | 13724 | 13740 | 13754 | 13756 | 13773 | 14544 | 14563 | 14579 | 14582 | 14598 | 15420 | 15437 | 15454 | 15456 | 15475 |
| | | S/T | 0.32 | 0.37 | 0.42 | 0.42 | 0.48 | 0.34 | 0.39 | 0.45 | 0.45 | 0.51 | 0.36 | 0.42 | 0.47 | 0.47 | 0.54 | 0.38 | 0.44 | 0.50 | 0.50 | 0.57 |
| | | PI | 0.73 | 0.73 | 0.73 | 0.73 | 0.73 | 0.77 | 0.77 | 0.77 | 0.77 | 0.77 | 0.82 | 0.82 | 0.82 | 0.82 | 0.82 | 0.86 | 0.87 | 0.87 | 0.87 | 0.87 |
| | 68°F(20.0°C) | TC | 13370 | 13388 | 13403 | 13403 | 13422 | 14176 | 14193 | 14207 | 14210 | 14227 | 15023 | 15043 | 15059 | 15062 | 15079 | 15928 | 15946 | 15963 | 15966 | 15985 |
| | | S/T | 0.33 | 0.38 | 0.43 | 0.43 | 0.49 | 0.34 | 0.40 | 0.46 | 0.46 | 0.52 | 0.37 | 0.43 | 0.49 | 0.49 | 0.56 | 0.39 | 0.45 | 0.52 | 0.52 | 0.59 |
| | | PI | 0.74 | 0.74 | 0.74 | 0.74 | 0.74 | 0.78 | 0.78 | 0.79 | 0.79 | 0.79 | 0.83 | 0.83 | 0.83 | 0.83 | 0.83 | 0.88 | 0.88 | 0.88 | 0.88 | 0.88 |
| | 77°F(25.0°C) | TC | 13797 | 13816 | 13831 | 13831 | 13850 | 14629 | 14646 | 14660 | 14663 | 14681 | 15503 | 15523 | 15540 | 15543 | 15560 | 16437 | 16454 | 16472 | 16475 | 16495 |
| | | S/T | 0.33 | 0.39 | 0.44 | 0.44 | 0.50 | 0.35 | 0.41 | 0.47 | 0.47 | 0.53 | 0.37 | 0.43 | 0.49 | 0.49 | 0.56 | 0.39 | 0.46 | 0.52 | 0.52 | 0.60 |
| | | PI | 0.75 | 0.75 | 0.75 | 0.75 | 0.76 | 0.80 | 0.80 | 0.80 | 0.80 | 0.80 | 0.85 | 0.85 | 0.85 | 0.85 | 0.85 | 0.90 | 0.90 | 0.90 | 0.90 | 0.90 |

Manufacturer reserves the right to change, at any time, specifications and designs without notice and without obligations.

# Table 10: Cooling Performance 24K (Continued)

| AIRFLOW (CFM) | OUTDOOR DB °F (°C) | ID WB°F (°C) | 60.8°F(16.0°C) | | | | | 64.4°F(18.0°C) | | | | | 67°F(19.4°C) | | | | | 71.6°F(22.0°C) | | | | |
|---|---|---|---|---|---|---|---|---|---|---|---|---|---|---|---|---|---|---|---|---|---|---|
| | | ID DB°F (°C) | 73.4°F (23.0°C) | 77.0°F (25.0°C) | 80.0°F (26.7°C) | 80.6°F (27.0°C) | 84.2°F (29.0°C) | 73.4°F (23.0°C) | 77.0°F (25.0°C) | 80.0°F 26.7°C) | 80.6°F (27.0°C) | 84.2°F (29.0°C) | 73.4°F (23.0°C) | 77.0°F (25.0°C) | 80.0°F (26.7°C) | 80.6°F (27.0°C) | 84.2°F (29.0°C) | 73.4°F (23.0°C) | 77.0°F( 25.0°C) | 80.0°F (26.7°C) | 80.6°F (27.0°C) | 84.2°F (29.0°C) |
| 400 | 82°F(27.8°C) | TC | 13783 | 13801 | 13816 | 13817 | 13836 | 14614 | 14631 | 14645 | 14648 | 14666 | 15487 | 15507 | 15524 | 15527 | 15544 | 16420 | 16438 | 16455 | 16458 | 16479 |
| | | S/T | 0.33 | 0.39 | 0.44 | 0.44 | 0.51 | 0.35 | 0.41 | 0.47 | 0.47 | 0.54 | 0.37 | 0.44 | 0.50 | 0.50 | 0.57 | 0.40 | 0.47 | 0.53 | 0.53 | 0.60 |
| | | PI | 0.80 | 0.80 | 0.80 | 0.80 | 0.80 | 0.85 | 0.85 | 0.85 | 0.85 | 0.85 | 0.90 | 0.90 | 0.90 | 0.90 | 0.90 | 0.96 | 0.96 | 0.96 | 0.96 | 0.96 |
| | 86°F(30.0°C) | TC | 13455 | 13473 | 13487 | 13488 | 13506 | 14266 | 14282 | 14297 | 14299 | 14316 | 15118 | 15138 | 15154 | 15157 | 15174 | 16029 | 16046 | 16064 | 16066 | 16086 |
| | | S/T | 0.34 | 0.40 | 0.45 | 0.45 | 0.51 | 0.36 | 0.42 | 0.48 | 0.48 | 0.54 | 0.38 | 0.45 | 0.51 | 0.51 | 0.58 | 0.40 | 0.47 | 0.54 | 0.54 | 0.61 |
| | | PI | 0.89 | 0.90 | 0.90 | 0.90 | 0.90 | 0.95 | 0.95 | 0.95 | 0.95 | 0.95 | 1.00 | 1.01 | 1.01 | 1.01 | 1.01 | 1.07 | 1.07 | 1.07 | 1.07 | 1.07 |
| | 95°F(35.0°C) | TC | 12716 | 12733 | 12747 | 12748 | 12765 | 13483 | 13499 | 13512 | 13515 | 13531 | 14288 | 14307 | 14323 | 14325 | 14341 | 15149 | 15166 | 15182 | 15184 | 15203 |
| | | S/T | 0.34 | 0.40 | 0.45 | 0.45 | 0.51 | 0.36 | 0.42 | 0.48 | 0.48 | 0.54 | 0.38 | 0.45 | 0.51 | 0.51 | 0.58 | 0.40 | 0.47 | 0.54 | 0.54 | 0.61 |
| | | PI | 1.10 | 1.10 | 1.10 | 1.11 | 1.11 | 1.17 | 1.17 | 1.17 | 1.17 | 1.17 | 1.24 | 1.24 | 1.24 | 1.24 | 1.24 | 1.31 | 1.31 | 1.32 | 1.32 | 1.32 |
| | 104°F(40.0°C) | TC | 11353 | 11368 | 11380 | 11381 | 11396 | 12037 | 12051 | 12063 | 12066 | 12080 | 12756 | 12773 | 12787 | 12789 | 12804 | 13525 | 13540 | 13554 | 13556 | 13573 |
| | | S/T | 0.35 | 0.41 | 0.46 | 0.46 | 0.53 | 0.37 | 0.43 | 0.49 | 0.49 | 0.56 | 0.39 | 0.46 | 0.52 | 0.52 | 0.59 | 0.41 | 0.48 | 0.55 | 0.55 | 0.63 |
| | | PI | 1.11 | 1.11 | 1.11 | 1.11 | 1.11 | 1.17 | 1.18 | 1.18 | 1.18 | 1.18 | 1.24 | 1.25 | 1.25 | 1.25 | 1.25 | 1.32 | 1.32 | 1.32 | 1.32 | 1.32 |
| | 110°F(43.0°C) | TC | 10535 | 10549 | 10560 | 10561 | 10575 | 11170 | 11183 | 11194 | 11196 | 11210 | 11837 | 11852 | 11866 | 11868 | 11881 | 12550 | 12564 | 12578 | 12580 | 12595 |
| | | S/T | 0.36 | 0.42 | 0.48 | 0.48 | 0.55 | 0.38 | 0.45 | 0.51 | 0.51 | 0.58 | 0.40 | 0.47 | 0.54 | 0.54 | 0.61 | 0.43 | 0.50 | 0.57 | 0.57 | 0.65 |
| | | PI | 1.11 | 1.11 | 1.11 | 1.11 | 1.11 | 1.18 | 1.18 | 1.18 | 1.18 | 1.18 | 1.25 | 1.25 | 1.25 | 1.25 | 1.25 | 1.32 | 1.32 | 1.33 | 1.33 | 1.33 |
| | 115°F(46.0°C) | TC | 9484 | 9497 | 9507 | 9507 | 9520 | 10056 | 10067 | 10077 | 10079 | 10091 | 10656 | 10670 | 10682 | 10684 | 10696 | 11298 | 11311 | 11323 | 11325 | 11339 |
| | | S/T | 0.36 | 0.43 | 0.48 | 0.48 | 0.55 | 0.38 | 0.45 | 0.51 | 0.51 | 0.58 | 0.41 | 0.48 | 0.54 | 0.54 | 0.62 | 0.43 | 0.51 | 0.58 | 0.58 | 0.66 |
| | | PI | 1.08 | 1.08 | 1.08 | 1.08 | 1.08 | 1.14 | 1.15 | 1.15 | 1.15 | 1.15 | 1.21 | 1.21 | 1.22 | 1.22 | 1.22 | 1.29 | 1.29 | 1.29 | 1.29 | 1.29 |
| | 122°F(50.0°C) | TC | 8083 | 8094 | 8102 | 8103 | 8114 | 8570 | 8580 | 8589 | 8590 | 8600 | 9082 | 9094 | 9104 | 9106 | 9116 | 9629 | 9640 | 9650 | 9652 | 9664 |
| | | S/T | 0.37 | 0.44 | 0.50 | 0.50 | 0.56 | 0.39 | 0.46 | 0.52 | 0.53 | 0.60 | 0.42 | 0.49 | 0.56 | 0.56 | 0.63 | 0.44 | 0.52 | 0.59 | 0.59 | 0.67 |
| | | PI | 1.04 | 1.04 | 1.04 | 1.04 | 1.04 | 1.10 | 1.10 | 1.10 | 1.10 | 1.11 | 1.17 | 1.17 | 1.17 | 1.17 | 1.17 | 1.24 | 1.24 | 1.24 | 1.24 | 1.24 |
| 471 | 5°F(-15.0°C) | TC | 9258 | 9270 | 9280 | 9281 | 9293 | 9816 | 9827 | 9837 | 9839 | 9851 | 10402 | 10416 | 10427 | 10429 | 10441 | 11029 | 11041 | 11053 | 11054 | 11068 |
| | | S/T | 0.36 | 0.42 | 0.48 | 0.48 | 0.54 | 0.38 | 0.45 | 0.51 | 0.51 | 0.58 | 0.40 | 0.47 | 0.54 | 0.54 | 0.61 | 0.43 | 0.50 | 0.57 | 0.57 | 0.65 |
| | | PI | 0.95 | 0.95 | 0.95 | 0.95 | 0.95 | 1.01 | 1.01 | 1.01 | 1.01 | 1.01 | 1.07 | 1.07 | 1.07 | 1.07 | 1.07 | 1.13 | 1.13 | 1.13 | 1.13 | 1.14 |
| | 14°F(-10.0°C) | TC | 12821 | 12838 | 12852 | 12852 | 12870 | 13593 | 13609 | 13623 | 13626 | 13642 | 14406 | 14424 | 14440 | 14443 | 14459 | 15273 | 15290 | 15307 | 15309 | 15328 |
| | | S/T | 0.36 | 0.42 | 0.48 | 0.48 | 0.55 | 0.38 | 0.45 | 0.51 | 0.51 | 0.58 | 0.40 | 0.47 | 0.54 | 0.54 | 0.61 | 0.43 | 0.50 | 0.57 | 0.57 | 0.65 |
| | | PI | 0.56 | 0.56 | 0.56 | 0.56 | 0.56 | 0.59 | 0.59 | 0.59 | 0.59 | 0.59 | 0.63 | 0.63 | 0.63 | 0.63 | 0.63 | 0.66 | 0.66 | 0.66 | 0.66 | 0.67 |
| | 17°F(-8.3°C) | TC | 14008 | 14027 | 14042 | 14043 | 14062 | 14853 | 14870 | 14885 | 14888 | 14906 | 15740 | 15760 | 15778 | 15781 | 15799 | 16688 | 16707 | 16725 | 16727 | 16748 |
| | | S/T | 0.36 | 0.42 | 0.48 | 0.48 | 0.55 | 0.38 | 0.45 | 0.51 | 0.51 | 0.58 | 0.40 | 0.47 | 0.54 | 0.54 | 0.61 | 0.43 | 0.50 | 0.57 | 0.57 | 0.65 |
| | | PI | 0.43 | 0.43 | 0.43 | 0.43 | 0.43 | 0.45 | 0.45 | 0.45 | 0.45 | 0.45 | 0.48 | 0.48 | 0.48 | 0.48 | 0.48 | 0.51 | 0.51 | 0.51 | 0.51 | 0.51 |
| | 23°F(-5.0°C) | TC | 14170 | 14189 | 14204 | 14205 | 14224 | 15024 | 15041 | 15056 | 15059 | 15077 | 15921 | 15942 | 15960 | 15963 | 15980 | 16880 | 16899 | 16917 | 16920 | 16941 |
| | | S/T | 0.36 | 0.42 | 0.48 | 0.48 | 0.55 | 0.38 | 0.45 | 0.51 | 0.51 | 0.58 | 0.41 | 0.48 | 0.54 | 0.54 | 0.62 | 0.43 | 0.51 | 0.57 | 0.57 | 0.65 |
| | | PI | 0.55 | 0.55 | 0.55 | 0.55 | 0.55 | 0.59 | 0.59 | 0.59 | 0.59 | 0.59 | 0.62 | 0.62 | 0.62 | 0.62 | 0.62 | 0.66 | 0.66 | 0.66 | 0.66 | 0.66 |

Manufacturer reserves the right to change, at any time, specifications and designs without notice and without obligations.

# Table 10: Cooling Performance 24K (Continued)

| AIRFLOW (CFM) | OUTDOOR DB °F (℃) | ID WB°F (℃) | 60.8°F(16.0℃) | | | | | 64.4°F(18.0℃) | | | | | 67°F(19.4℃) | | | | | 71.6°F(22.0℃) | | | | |
|---|---|---|---|---|---|---|---|---|---|---|---|---|---|---|---|---|---|---|---|---|---|---|
| | | ID DB°F (℃) | 73.4°F (23.0℃) | 77.0°F (25.0℃) | 80.0°F (26.7℃) | 80.6°F (27.0℃) | 84.2°F (29.0℃) | 73.4°F (23.0℃) | 77.0°F (25.0℃) | 80.0°F 26.7℃) | 80.6°F (27.0℃) | 84.2°F (29.0℃) | 73.4°F (23.0℃) | 77.0°F (25.0℃) | 80.0°F (26.7℃) | 80.6°F (27.0℃) | 84.2°F (29.0℃) | 73.4°F (23.0℃) | 77.0°F( 25.0℃) | 80.0°F (26.7℃) | 80.6°F (27.0℃) | 84.2°F (29.0℃) |
| 471 | 35°F(1.7℃) | TC | 14492 | 14512 | 14527 | 14528 | 14548 | 15366 | 15384 | 15399 | 15402 | 15420 | 16284 | 16305 | 16323 | 16326 | 16344 | 17265 | 17283 | 17302 | 17305 | 17326 |
| | | S/T | 0.36 | 0.43 | 0.48 | 0.48 | 0.55 | 0.39 | 0.45 | 0.51 | 0.51 | 0.59 | 0.41 | 0.48 | 0.54 | 0.54 | 0.62 | 0.43 | 0.51 | 0.58 | 0.58 | 0.66 |
| | | PI | 0.80 | 0.81 | 0.81 | 0.81 | 0.81 | 0.85 | 0.85 | 0.86 | 0.86 | 0.86 | 0.90 | 0.91 | 0.91 | 0.91 | 0.91 | 0.96 | 0.96 | 0.96 | 0.96 | 0.96 |
| | 41°F(5.0℃) | TC | 14455 | 14474 | 14490 | 14491 | 14510 | 15326 | 15344 | 15359 | 15362 | 15381 | 16242 | 16263 | 16281 | 16284 | 16302 | 17220 | 17239 | 17258 | 17260 | 17282 |
| | | S/T | 0.36 | 0.43 | 0.49 | 0.49 | 0.55 | 0.39 | 0.45 | 0.51 | 0.51 | 0.59 | 0.41 | 0.48 | 0.55 | 0.55 | 0.62 | 0.43 | 0.51 | 0.58 | 0.58 | 0.66 |
| | | PI | 0.81 | 0.82 | 0.82 | 0.82 | 0.82 | 0.86 | 0.86 | 0.87 | 0.87 | 0.87 | 0.92 | 0.92 | 0.92 | 0.92 | 0.92 | 0.97 | 0.97 | 0.97 | 0.97 | 0.97 |
| | 47°F(8.3℃) | TC | 14418 | 14437 | 14453 | 14453 | 14473 | 15286 | 15305 | 15320 | 15323 | 15341 | 16200 | 16221 | 16239 | 16242 | 16260 | 17176 | 17194 | 17213 | 17216 | 17237 |
| | | S/T | 0.37 | 0.43 | 0.49 | 0.49 | 0.56 | 0.39 | 0.45 | 0.52 | 0.52 | 0.59 | 0.41 | 0.48 | 0.55 | 0.55 | 0.62 | 0.43 | 0.51 | 0.58 | 0.58 | 0.66 |
| | | PI | 0.82 | 0.83 | 0.83 | 0.83 | 0.83 | 0.87 | 0.88 | 0.88 | 0.88 | 0.88 | 0.93 | 0.93 | 0.93 | 0.93 | 0.93 | 0.98 | 0.98 | 0.98 | 0.99 | 0.99 |
| | 50°F(10.0℃) | TC | 14583 | 14603 | 14619 | 14619 | 14639 | 15462 | 15480 | 15496 | 15499 | 15517 | 16386 | 16407 | 16425 | 16429 | 16447 | 17373 | 17392 | 17411 | 17414 | 17435 |
| | | S/T | 0.37 | 0.43 | 0.49 | 0.49 | 0.56 | 0.39 | 0.46 | 0.52 | 0.52 | 0.59 | 0.41 | 0.48 | 0.55 | 0.55 | 0.63 | 0.44 | 0.51 | 0.58 | 0.58 | 0.66 |
| | | PI | 0.83 | 0.83 | 0.83 | 0.83 | 0.83 | 0.88 | 0.88 | 0.88 | 0.88 | 0.88 | 0.93 | 0.93 | 0.94 | 0.94 | 0.94 | 0.99 | 0.99 | 0.99 | 0.99 | 0.99 |
| | 59°F(15.0℃) | TC | 15080 | 15101 | 15117 | 15117 | 15138 | 15989 | 16008 | 16024 | 16027 | 16046 | 16944 | 16966 | 16985 | 16988 | 17007 | 17965 | 17985 | 18004 | 18007 | 18030 |
| | | S/T | 0.37 | 0.43 | 0.49 | 0.49 | 0.56 | 0.39 | 0.46 | 0.52 | 0.52 | 0.59 | 0.41 | 0.49 | 0.55 | 0.55 | 0.63 | 0.44 | 0.52 | 0.59 | 0.59 | 0.67 |
| | | PI | 0.85 | 0.85 | 0.85 | 0.85 | 0.85 | 0.90 | 0.90 | 0.90 | 0.90 | 0.90 | 0.95 | 0.95 | 0.95 | 0.95 | 0.95 | 1.01 | 1.01 | 1.01 | 1.01 | 1.01 |
| | 68°F(20.0℃) | TC | 15577 | 15598 | 15615 | 15616 | 15637 | 16516 | 16536 | 16552 | 16555 | 16575 | 17503 | 17525 | 17545 | 17548 | 17568 | 18557 | 18577 | 18598 | 18601 | 18624 |
| | | S/T | 0.38 | 0.44 | 0.50 | 0.50 | 0.58 | 0.40 | 0.47 | 0.54 | 0.54 | 0.61 | 0.43 | 0.50 | 0.57 | 0.57 | 0.65 | 0.45 | 0.53 | 0.60 | 0.60 | 0.69 |
| | | PI | 0.86 | 0.86 | 0.86 | 0.86 | 0.86 | 0.91 | 0.91 | 0.92 | 0.92 | 0.92 | 0.97 | 0.97 | 0.97 | 0.97 | 0.97 | 1.03 | 1.03 | 1.03 | 1.03 | 1.03 |
| | 77°F(25.0℃) | TC | 16074 | 16096 | 16113 | 16114 | 16136 | 17043 | 17063 | 17080 | 17083 | 17104 | 18061 | 18085 | 18105 | 18108 | 18128 | 19149 | 19170 | 19191 | 19194 | 19218 |
| | | S/T | 0.38 | 0.45 | 0.51 | 0.51 | 0.58 | 0.41 | 0.48 | 0.54 | 0.54 | 0.62 | 0.43 | 0.51 | 0.57 | 0.57 | 0.66 | 0.46 | 0.54 | 0.61 | 0.61 | 0.69 |
| | | PI | 0.88 | 0.88 | 0.88 | 0.88 | 0.88 | 0.93 | 0.93 | 0.93 | 0.93 | 0.93 | 0.99 | 0.99 | 0.99 | 0.99 | 0.99 | 1.04 | 1.05 | 1.05 | 1.05 | 1.05 |
| | 82°F(27.8℃) | TC | 16058 | 16079 | 16097 | 16097 | 16119 | 17026 | 17046 | 17063 | 17066 | 17086 | 18043 | 18066 | 18086 | 18090 | 18110 | 19130 | 19151 | 19171 | 19174 | 19198 |
| | | S/T | 0.39 | 0.46 | 0.52 | 0.52 | 0.59 | 0.41 | 0.48 | 0.55 | 0.55 | 0.63 | 0.44 | 0.51 | 0.58 | 0.58 | 0.66 | 0.46 | 0.54 | 0.62 | 0.62 | 0.70 |
| | | PI | 0.93 | 0.94 | 0.94 | 0.94 | 0.94 | 0.99 | 0.99 | 0.99 | 0.99 | 0.99 | 1.05 | 1.05 | 1.05 | 1.05 | 1.05 | 1.11 | 1.11 | 1.12 | 1.12 | 1.12 |
| | 86°F(30.0℃) | TC | 15675 | 15697 | 15713 | 15714 | 15735 | 16620 | 16640 | 16656 | 16660 | 16679 | 17613 | 17636 | 17656 | 17659 | 17679 | 18674 | 18695 | 18715 | 18718 | 18741 |
| | | S/T | 0.39 | 0.46 | 0.52 | 0.52 | 0.60 | 0.42 | 0.49 | 0.56 | 0.56 | 0.63 | 0.44 | 0.52 | 0.59 | 0.59 | 0.67 | 0.47 | 0.55 | 0.62 | 0.62 | 0.71 |
| | | PI | 1.04 | 1.04 | 1.04 | 1.04 | 1.05 | 1.10 | 1.11 | 1.11 | 1.11 | 1.11 | 1.17 | 1.17 | 1.17 | 1.17 | 1.18 | 1.24 | 1.24 | 1.24 | 1.24 | 1.25 |
| | 95°F(35.0℃) | TC | 14815 | 14835 | 14851 | 14852 | 14872 | 15708 | 15727 | 15742 | 15745 | 15764 | 16646 | 16668 | 16687 | 16690 | 16708 | 17649 | 17669 | 17688 | 17691 | 17713 |
| | | S/T | 0.39 | 0.46 | 0.52 | 0.52 | 0.60 | 0.42 | 0.49 | 0.56 | 0.56 | 0.63 | 0.44 | 0.52 | 0.59 | 0.59 | 0.67 | 0.47 | 0.55 | 0.62 | 0.62 | 0.71 |
| | | PI | 1.28 | 1.29 | 1.29 | 1.29 | 1.29 | 1.36 | 1.36 | 1.36 | 1.36 | 1.37 | 1.44 | 1.44 | 1.45 | 1.45 | 1.45 | 1.53 | 1.53 | 1.53 | 1.53 | 1.54 |
| | 104°F(40.0℃) | TC | 13227 | 13244 | 13259 | 13259 | 13277 | 14024 | 14040 | 14054 | 14057 | 14074 | 14862 | 14881 | 14898 | 14900 | 14917 | 15757 | 15774 | 15791 | 15794 | 15813 |
| | | S/T | 0.40 | 0.47 | 0.54 | 0.54 | 0.61 | 0.43 | 0.50 | 0.57 | 0.57 | 0.65 | 0.45 | 0.53 | 0.60 | 0.60 | 0.69 | 0.48 | 0.56 | 0.64 | 0.64 | 0.73 |
| | | PI | 1.29 | 1.29 | 1.29 | 1.29 | 1.29 | 1.37 | 1.37 | 1.37 | 1.37 | 1.37 | 1.45 | 1.45 | 1.45 | 1.45 | 1.45 | 1.54 | 1.54 | 1.54 | 1.54 | 1.54 |

Manufacturer reserves the right to change, at any time, specifications and designs without notice and without obligations.

# Table 10: Cooling Performance 24K (Continued)

| AIRFLOW (CFM) | OUTDOOR DB °F (°C) | ID WB°F (°C) | 60.8°F(16.0°C) | | | | | 64.4°F(18.0°C) | | | | | 67°F(19.4°C) | | | | | 71.6°F(22.0°C) | | | | |
|---|---|---|---|---|---|---|---|---|---|---|---|---|---|---|---|---|---|---|---|---|---|---|
| | | ID DB°F (°C) | 73.4°F (23.0°C) | 77.0°F (25.0°C) | 80.0°F (26.7°C) | 80.6°F (27.0°C) | 84.2°F (29.0°C) | 73.4°F (23.0°C) | 77.0°F (25.0°C) | 80.0°F 26.7°C) | 80.6°F (27.0°C) | 84.2°F (29.0°C) | 73.4°F (23.0°C) | 77.0°F (25.0°C) | 80.0°F (26.7°C) | 80.6°F (27.0°C) | 84.2°F (29.0°C) | 73.4°F (23.0°C) | 77.0°F( 25.0°C) | 80.0°F (26.7°C) | 80.6°F (27.0°C) | 84.2°F (29.0°C) |
| 471 | 110°F(43.0°C) | TC | 12274 | 12290 | 12303 | 12304 | 12321 | 13013 | 13029 | 13042 | 13044 | 13060 | 13791 | 13809 | 13824 | 13827 | 13842 | 14622 | 14638 | 14654 | 14656 | 14674 |
| | | S/T | 0.42 | 0.49 | 0.56 | 0.56 | 0.64 | 0.44 | 0.52 | 0.59 | 0.59 | 0.67 | 0.47 | 0.55 | 0.63 | 0.63 | 0.71 | 0.50 | 0.58 | 0.66 | 0.66 | 0.76 |
| | | PI | 1.29 | 1.29 | 1.30 | 1.30 | 1.30 | 1.37 | 1.37 | 1.37 | 1.37 | 1.38 | 1.45 | 1.45 | 1.46 | 1.46 | 1.46 | 1.54 | 1.54 | 1.54 | 1.54 | 1.55 |
| | 115°F(46.0°C) | TC | 11049 | 11064 | 11076 | 11077 | 11092 | 11715 | 11729 | 11741 | 11743 | 11757 | 12415 | 12431 | 12445 | 12447 | 12461 | 13163 | 13177 | 13192 | 13194 | 13210 |
| | | S/T | 0.42 | 0.50 | 0.56 | 0.56 | 0.64 | 0.45 | 0.53 | 0.60 | 0.60 | 0.68 | 0.48 | 0.56 | 0.63 | 0.63 | 0.72 | 0.50 | 0.59 | 0.67 | 0.67 | 0.77 |
| | | PI | 1.26 | 1.26 | 1.26 | 1.26 | 1.26 | 1.33 | 1.33 | 1.34 | 1.34 | 1.34 | 1.41 | 1.41 | 1.42 | 1.42 | 1.42 | 1.50 | 1.50 | 1.50 | 1.50 | 1.50 |
| | 122°F(50.0°C) | TC | 9417 | 9430 | 9440 | 9440 | 9453 | 9984 | 9996 | 10006 | 10008 | 10020 | 10581 | 10595 | 10606 | 10608 | 10620 | 11218 | 11231 | 11243 | 11245 | 11259 |
| | | S/T | 0.43 | 0.51 | 0.58 | 0.58 | 0.66 | 0.46 | 0.54 | 0.61 | 0.61 | 0.70 | 0.49 | 0.57 | 0.65 | 0.65 | 0.74 | 0.52 | 0.60 | 0.69 | 0.69 | 0.78 |
| | | PI | 1.21 | 1.21 | 1.21 | 1.21 | 1.21 | 1.28 | 1.28 | 1.29 | 1.29 | 1.29 | 1.36 | 1.36 | 1.36 | 1.36 | 1.36 | 1.44 | 1.44 | 1.44 | 1.44 | 1.45 |
| 500 | 5°F(-15.0°C) | TC | 10786 | 10800 | 10812 | 10812 | 10827 | 11436 | 11449 | 11460 | 11463 | 11476 | 12119 | 12135 | 12148 | 12150 | 12164 | 12849 | 12863 | 12877 | 12879 | 12895 |
| | | S/T | 0.42 | 0.49 | 0.56 | 0.56 | 0.63 | 0.44 | 0.52 | 0.59 | 0.59 | 0.67 | 0.47 | 0.55 | 0.62 | 0.62 | 0.71 | 0.50 | 0.58 | 0.66 | 0.66 | 0.75 |
| | | PI | 1.11 | 1.11 | 1.11 | 1.11 | 1.11 | 1.17 | 1.17 | 1.18 | 1.18 | 1.18 | 1.24 | 1.24 | 1.25 | 1.25 | 1.25 | 1.32 | 1.32 | 1.32 | 1.32 | 1.32 |
| | 14°F(-10.0°C) | TC | 14937 | 14957 | 14973 | 14974 | 14994 | 15837 | 15856 | 15871 | 15875 | 15893 | 16783 | 16805 | 16824 | 16827 | 16846 | 17794 | 17814 | 17833 | 17836 | 17858 |
| | | S/T | 0.42 | 0.49 | 0.56 | 0.56 | 0.64 | 0.44 | 0.52 | 0.59 | 0.59 | 0.67 | 0.47 | 0.55 | 0.63 | 0.63 | 0.71 | 0.50 | 0.58 | 0.66 | 0.66 | 0.76 |
| | | PI | 0.65 | 0.65 | 0.65 | 0.65 | 0.65 | 0.69 | 0.69 | 0.69 | 0.69 | 0.69 | 0.73 | 0.73 | 0.73 | 0.73 | 0.73 | 0.77 | 0.77 | 0.77 | 0.77 | 0.78 |
| | 17°F(-8.3°C) | TC | 16321 | 16342 | 16360 | 16361 | 16383 | 17304 | 17325 | 17342 | 17345 | 17366 | 18338 | 18362 | 18382 | 18386 | 18406 | 19443 | 19464 | 19485 | 19488 | 19512 |
| | | S/T | 0.42 | 0.49 | 0.56 | 0.56 | 0.64 | 0.44 | 0.52 | 0.59 | 0.59 | 0.68 | 0.47 | 0.55 | 0.63 | 0.63 | 0.72 | 0.50 | 0.59 | 0.67 | 0.67 | 0.76 |
| | | PI | 0.50 | 0.50 | 0.50 | 0.50 | 0.50 | 0.53 | 0.53 | 0.53 | 0.53 | 0.53 | 0.56 | 0.56 | 0.56 | 0.56 | 0.56 | 0.59 | 0.59 | 0.59 | 0.59 | 0.59 |
| | 23°F(-5.0°C) | TC | 16508 | 16531 | 16548 | 16549 | 16571 | 17503 | 17524 | 17541 | 17545 | 17566 | 18549 | 18573 | 18594 | 18597 | 18618 | 19667 | 19688 | 19709 | 19712 | 19737 |
| | | S/T | 0.42 | 0.49 | 0.56 | 0.56 | 0.64 | 0.45 | 0.52 | 0.60 | 0.60 | 0.68 | 0.47 | 0.56 | 0.63 | 0.63 | 0.72 | 0.50 | 0.59 | 0.67 | 0.67 | 0.76 |
| | | PI | 0.64 | 0.64 | 0.64 | 0.64 | 0.65 | 0.68 | 0.68 | 0.68 | 0.68 | 0.68 | 0.72 | 0.72 | 0.72 | 0.72 | 0.73 | 0.77 | 0.77 | 0.77 | 0.77 | 0.77 |
| | 35°F(1.7°C) | TC | 16884 | 16907 | 16925 | 16926 | 16949 | 17902 | 17923 | 17940 | 17944 | 17965 | 18971 | 18996 | 19017 | 19020 | 19042 | 20114 | 20136 | 20158 | 20161 | 20186 |
| | | S/T | 0.42 | 0.50 | 0.56 | 0.56 | 0.64 | 0.45 | 0.53 | 0.60 | 0.60 | 0.68 | 0.48 | 0.56 | 0.63 | 0.63 | 0.72 | 0.50 | 0.59 | 0.67 | 0.67 | 0.77 |
| | | PI | 0.94 | 0.94 | 0.94 | 0.94 | 0.94 | 0.99 | 1.00 | 1.00 | 1.00 | 1.00 | 1.05 | 1.05 | 1.06 | 1.06 | 1.06 | 1.12 | 1.12 | 1.12 | 1.12 | 1.12 |
| | 41°F(5.0°C) | TC | 16841 | 16863 | 16881 | 16882 | 16905 | 17856 | 17877 | 17894 | 17898 | 17919 | 18922 | 18947 | 18968 | 18972 | 18993 | 20062 | 20084 | 20106 | 20109 | 20134 |
| | | S/T | 0.42 | 0.50 | 0.57 | 0.57 | 0.64 | 0.45 | 0.53 | 0.60 | 0.60 | 0.68 | 0.48 | 0.56 | 0.64 | 0.64 | 0.72 | 0.51 | 0.59 | 0.67 | 0.67 | 0.77 |
| | | PI | 0.95 | 0.95 | 0.95 | 0.95 | 0.95 | 1.01 | 1.01 | 1.01 | 1.01 | 1.01 | 1.07 | 1.07 | 1.07 | 1.07 | 1.07 | 1.13 | 1.13 | 1.13 | 1.13 | 1.14 |
| | 47°F(8.3°C) | TC | 16797 | 16820 | 16838 | 16839 | 16861 | 17809 | 17831 | 17848 | 17852 | 17873 | 18873 | 18898 | 18919 | 18923 | 18944 | 20011 | 20032 | 20054 | 20057 | 20082 |
| | | S/T | 0.43 | 0.50 | 0.57 | 0.57 | 0.65 | 0.45 | 0.53 | 0.60 | 0.60 | 0.69 | 0.48 | 0.56 | 0.64 | 0.64 | 0.73 | 0.51 | 0.59 | 0.68 | 0.68 | 0.77 |
| | | PI | 0.96 | 0.96 | 0.96 | 0.96 | 0.96 | 1.02 | 1.02 | 1.02 | 1.02 | 1.02 | 1.08 | 1.08 | 1.08 | 1.08 | 1.08 | 1.15 | 1.15 | 1.15 | 1.15 | 1.15 |
| | 50°F(10.0°C) | TC | 16990 | 17013 | 17031 | 17032 | 17055 | 18014 | 18035 | 18053 | 18057 | 18078 | 19090 | 19115 | 19136 | 19140 | 19161 | 20241 | 20263 | 20285 | 20288 | 20313 |
| | | S/T | 0.43 | 0.50 | 0.57 | 0.57 | 0.65 | 0.45 | 0.53 | 0.60 | 0.60 | 0.69 | 0.48 | 0.56 | 0.64 | 0.64 | 0.73 | 0.51 | 0.60 | 0.68 | 0.68 | 0.77 |
| | | PI | 0.97 | 0.97 | 0.97 | 0.97 | 0.97 | 1.03 | 1.03 | 1.03 | 1.03 | 1.03 | 1.09 | 1.09 | 1.09 | 1.09 | 1.09 | 1.15 | 1.15 | 1.15 | 1.15 | 1.16 |

Manufacturer reserves the right to change, at any time, specifications and designs without notice and without obligations.

# Table 10: Cooling Performance 24K (Continued)

| AIRFLOW (CFM) | OUTDOOR DB °F (℃) | ID WB°F (℃) | 60.8°F(16.0℃) | | | | | 64.4°F(18.0℃) | | | | | 67°F(19.4℃) | | | | | 71.6°F(22.0℃) | | | | |
|---|---|---|---|---|---|---|---|---|---|---|---|---|---|---|---|---|---|---|---|---|---|---|
| | | ID DB°F (℃) | 73.4°F (23.0℃) | 77.0°F (25.0℃) | 80.0°F (26.7℃) | 80.6°F (27.0℃) | 84.2°F (29.0℃) | 73.4°F (23.0℃) | 77.0°F (25.0℃) | 80.0°F 26.7℃) | 80.6°F (27.0℃) | 84.2°F (29.0℃) | 73.4°F (23.0℃) | 77.0°F (25.0℃) | 80.0°F (26.7℃) | 80.6°F (27.0℃) | 84.2°F (29.0℃) | 73.4°F (23.0℃) | 77.0°F( 25.0℃) | 80.0°F (26.7℃) | 80.6°F (27.0℃) | 84.2°F (29.0℃) |
| 500 | 59°F(15.0℃) | TC | 17569 | 17593 | 17612 | 17613 | 17636 | 18628 | 18650 | 18669 | 18672 | 18694 | 19741 | 19767 | 19789 | 19792 | 19814 | 20930 | 20953 | 20976 | 20979 | 21005 |
| | | S/T | 0.43 | 0.50 | 0.57 | 0.57 | 0.65 | 0.46 | 0.53 | 0.61 | 0.61 | 0.69 | 0.48 | 0.57 | 0.64 | 0.64 | 0.73 | 0.51 | 0.60 | 0.68 | 0.68 | 0.78 |
| | | PI | 0.99 | 0.99 | 0.99 | 0.99 | 0.99 | 1.04 | 1.05 | 1.05 | 1.05 | 1.05 | 1.11 | 1.11 | 1.11 | 1.11 | 1.11 | 1.17 | 1.17 | 1.18 | 1.18 | 1.18 |
| | 68°F(20.0℃) | TC | 18148 | 18173 | 18192 | 18193 | 18218 | 19242 | 19265 | 19284 | 19288 | 19310 | 20392 | 20418 | 20441 | 20445 | 20467 | 21620 | 21644 | 21667 | 21671 | 21698 |
| | | S/T | 0.44 | 0.52 | 0.59 | 0.59 | 0.67 | 0.47 | 0.55 | 0.62 | 0.62 | 0.71 | 0.50 | 0.58 | 0.66 | 0.66 | 0.75 | 0.53 | 0.62 | 0.70 | 0.70 | 0.80 |
| | | PI | 1.00 | 1.00 | 1.01 | 1.01 | 1.01 | 1.06 | 1.07 | 1.07 | 1.07 | 1.07 | 1.13 | 1.13 | 1.13 | 1.13 | 1.13 | 1.20 | 1.20 | 1.20 | 1.20 | 1.20 |
| | 77°F(25.0℃) | TC | 18727 | 18752 | 18773 | 18774 | 18799 | 19856 | 19879 | 19899 | 19903 | 19927 | 21042 | 21069 | 21093 | 21097 | 21120 | 22310 | 22334 | 22359 | 22362 | 22390 |
| | | S/T | 0.45 | 0.52 | 0.60 | 0.60 | 0.68 | 0.47 | 0.56 | 0.63 | 0.63 | 0.72 | 0.50 | 0.59 | 0.67 | 0.67 | 0.76 | 0.53 | 0.62 | 0.71 | 0.71 | 0.81 |
| | | PI | 1.02 | 1.02 | 1.02 | 1.02 | 1.03 | 1.08 | 1.08 | 1.09 | 1.09 | 1.09 | 1.15 | 1.15 | 1.15 | 1.15 | 1.15 | 1.22 | 1.22 | 1.22 | 1.22 | 1.22 |
| | 82°F(27.8℃) | TC | 18708 | 18733 | 18753 | 18754 | 18780 | 19836 | 19859 | 19879 | 19883 | 19906 | 21021 | 21048 | 21071 | 21075 | 21099 | 22287 | 22311 | 22336 | 22339 | 22367 |
| | | S/T | 0.45 | 0.53 | 0.60 | 0.60 | 0.69 | 0.48 | 0.56 | 0.64 | 0.64 | 0.73 | 0.51 | 0.60 | 0.68 | 0.68 | 0.77 | 0.54 | 0.63 | 0.72 | 0.72 | 0.82 |
| | | PI | 1.09 | 1.09 | 1.09 | 1.09 | 1.09 | 1.15 | 1.16 | 1.16 | 1.16 | 1.16 | 1.22 | 1.22 | 1.23 | 1.23 | 1.23 | 1.30 | 1.30 | 1.30 | 1.30 | 1.30 |
| | 86°F(30.0℃) | TC | 18263 | 18287 | 18307 | 18308 | 18332 | 19363 | 19386 | 19405 | 19409 | 19432 | 20520 | 20547 | 20570 | 20573 | 20596 | 21756 | 21780 | 21804 | 21807 | 21834 |
| | | S/T | 0.46 | 0.54 | 0.61 | 0.61 | 0.70 | 0.49 | 0.57 | 0.65 | 0.65 | 0.74 | 0.52 | 0.60 | 0.69 | 0.69 | 0.78 | 0.55 | 0.64 | 0.73 | 0.73 | 0.83 |
| | | PI | 1.21 | 1.22 | 1.22 | 1.22 | 1.22 | 1.29 | 1.29 | 1.29 | 1.29 | 1.29 | 1.36 | 1.37 | 1.37 | 1.37 | 1.37 | 1.45 | 1.45 | 1.45 | 1.45 | 1.45 |
| | 95°F(35.0℃) | TC | 17260 | 17284 | 17302 | 17303 | 17326 | 18301 | 18322 | 18340 | 18344 | 18366 | 19394 | 19419 | 19441 | 19444 | 19466 | 20562 | 20585 | 20607 | 20610 | 20636 |
| | | S/T | 0.46 | 0.54 | 0.61 | 0.61 | 0.70 | 0.49 | 0.57 | 0.65 | 0.65 | 0.74 | 0.52 | 0.60 | 0.69 | 0.69 | 0.78 | 0.55 | 0.64 | 0.73 | 0.73 | 0.83 |
| | | PI | 1.50 | 1.50 | 1.50 | 1.50 | 1.50 | 1.59 | 1.59 | 1.59 | 1.59 | 1.59 | 1.68 | 1.68 | 1.69 | 1.69 | 1.69 | 1.78 | 1.78 | 1.79 | 1.79 | 1.79 |
| | 104°F(40.0℃) | TC | 15410 | 15430 | 15447 | 15448 | 15469 | 16338 | 16358 | 16374 | 16377 | 16397 | 17315 | 17337 | 17356 | 17360 | 17379 | 18358 | 18378 | 18398 | 18401 | 18423 |
| | | S/T | 0.47 | 0.55 | 0.63 | 0.63 | 0.71 | 0.50 | 0.58 | 0.66 | 0.66 | 0.76 | 0.53 | 0.62 | 0.70 | 0.70 | 0.80 | 0.56 | 0.66 | 0.75 | 0.75 | 0.85 |
| | | PI | 1.50 | 1.50 | 1.51 | 1.51 | 1.51 | 1.59 | 1.60 | 1.60 | 1.60 | 1.60 | 1.69 | 1.69 | 1.69 | 1.69 | 1.69 | 1.79 | 1.79 | 1.79 | 1.79 | 1.80 |
| | 110°F(43.0℃) | TC | 14299 | 14319 | 14334 | 14335 | 14354 | 15161 | 15179 | 15194 | 15197 | 15215 | 16067 | 16088 | 16106 | 16109 | 16127 | 17035 | 17053 | 17072 | 17075 | 17096 |
| | | S/T | 0.49 | 0.57 | 0.65 | 0.65 | 0.74 | 0.52 | 0.61 | 0.69 | 0.69 | 0.78 | 0.55 | 0.64 | 0.73 | 0.73 | 0.83 | 0.58 | 0.68 | 0.77 | 0.77 | 0.88 |
| | | PI | 1.51 | 1.51 | 1.51 | 1.51 | 1.51 | 1.60 | 1.60 | 1.60 | 1.60 | 1.60 | 1.69 | 1.69 | 1.70 | 1.70 | 1.70 | 1.79 | 1.80 | 1.80 | 1.80 | 1.80 |
| | 115°F(46.0℃) | TC | 12873 | 12890 | 12904 | 12905 | 12922 | 13649 | 13665 | 13678 | 13681 | 13697 | 14464 | 14483 | 14499 | 14502 | 14518 | 15336 | 15352 | 15369 | 15371 | 15391 |
| | | S/T | 0.49 | 0.58 | 0.66 | 0.66 | 0.75 | 0.52 | 0.61 | 0.70 | 0.70 | 0.79 | 0.55 | 0.65 | 0.74 | 0.74 | 0.84 | 0.59 | 0.69 | 0.78 | 0.78 | 0.89 |
| | | PI | 1.46 | 1.47 | 1.47 | 1.47 | 1.47 | 1.55 | 1.56 | 1.56 | 1.56 | 1.56 | 1.65 | 1.65 | 1.65 | 1.65 | 1.65 | 1.75 | 1.75 | 1.75 | 1.75 | 1.75 |
| | 122°F(50.0℃) | TC | 10971 | 10986 | 10998 | 10998 | 11013 | 11632 | 11646 | 11658 | 11660 | 11674 | 12327 | 12343 | 12357 | 12359 | 12373 | 13070 | 13084 | 13098 | 13100 | 13117 |
| | | S/T | 0.50 | 0.59 | 0.67 | 0.67 | 0.77 | 0.53 | 0.63 | 0.71 | 0.71 | 0.81 | 0.57 | 0.66 | 0.76 | 0.76 | 0.86 | 0.60 | 0.70 | 0.80 | 0.80 | 0.91 |
| | | PI | 1.41 | 1.41 | 1.41 | 1.41 | 1.42 | 1.49 | 1.50 | 1.50 | 1.50 | 1.50 | 1.58 | 1.59 | 1.59 | 1.59 | 1.59 | 1.68 | 1.68 | 1.68 | 1.68 | 1.69 |
| 706 | 5°F(-15.0℃) | TC | 12566 | 12583 | 12596 | 12597 | 12614 | 13323 | 13339 | 13352 | 13355 | 13371 | 14119 | 14137 | 14153 | 14156 | 14172 | 14970 | 14986 | 15002 | 15005 | 15023 |
| | | S/T | 0.49 | 0.57 | 0.65 | 0.65 | 0.74 | 0.51 | 0.60 | 0.69 | 0.69 | 0.78 | 0.55 | 0.64 | 0.73 | 0.73 | 0.83 | 0.58 | 0.68 | 0.77 | 0.77 | 0.88 |
| | | PI | 1.29 | 1.29 | 1.29 | 1.29 | 1.29 | 1.37 | 1.37 | 1.37 | 1.37 | 1.37 | 1.45 | 1.45 | 1.45 | 1.45 | 1.45 | 1.54 | 1.54 | 1.54 | 1.54 | 1.54 |

Manufacturer reserves the right to change, at any time, specifications and designs without notice and without obligations.

# Table 10: Cooling Performance 24K (Continued)

| AIRFLOW (CFM) | OUTDOOR DB °F (°C) | ID WB°F (°C) | 60.8°F(16.0°C) | | | | | 64.4°F(18.0°C) | | | | | 67°F(19.4°C) | | | | | 71.6°F(22.0°C) | | | | |
|---|---|---|---|---|---|---|---|---|---|---|---|---|---|---|---|---|---|---|---|---|---|---|
| | | ID DB°F (°C) | 73.4°F (23.0°C) | 77.0°F (25.0°C) | 80.0°F (26.7°C) | 80.6°F (27.0°C) | 84.2°F (29.0°C) | 73.4°F (23.0°C) | 77.0°F (25.0°C) | 80.0°F 26.7°C) | 80.6°F (27.0°C) | 84.2°F (29.0°C) | 73.4°F (23.0°C) | 77.0°F (25.0°C) | 80.0°F (26.7°C) | 80.6°F (27.0°C) | 84.2°F (29.0°C) | 73.4°F (23.0°C) | 77.0°F( 25.0°C) | 80.0°F (26.7°C) | 80.6°F (27.0°C) | 84.2°F (29.0°C) |
| 706 | 14°F(-10.0°C) | TC | 17402 | 17426 | 17444 | 17445 | 17469 | 18451 | 18473 | 18491 | 18495 | 18517 | 19553 | 19579 | 19600 | 19604 | 19626 | 20731 | 20754 | 20776 | 20780 | 20806 |
| | | S/T | 0.49 | 0.57 | 0.65 | 0.65 | 0.74 | 0.52 | 0.61 | 0.69 | 0.69 | 0.78 | 0.55 | 0.64 | 0.73 | 0.73 | 0.83 | 0.58 | 0.68 | 0.77 | 0.77 | 0.88 |
| | | PI | 0.76 | 0.76 | 0.76 | 0.76 | 0.76 | 0.80 | 0.80 | 0.80 | 0.80 | 0.80 | 0.85 | 0.85 | 0.85 | 0.85 | 0.85 | 0.90 | 0.90 | 0.90 | 0.90 | 0.90 |
| | 17°F(-8.3°C) | TC | 19014 | 19040 | 19060 | 19061 | 19087 | 20160 | 20184 | 20204 | 20208 | 20232 | 21365 | 21392 | 21416 | 21420 | 21444 | 22652 | 22676 | 22701 | 22705 | 22733 |
| | | S/T | 0.49 | 0.57 | 0.65 | 0.65 | 0.74 | 0.52 | 0.61 | 0.69 | 0.69 | 0.79 | 0.55 | 0.64 | 0.73 | 0.73 | 0.83 | 0.58 | 0.68 | 0.78 | 0.78 | 0.88 |
| | | PI | 0.58 | 0.58 | 0.58 | 0.58 | 0.58 | 0.61 | 0.61 | 0.61 | 0.61 | 0.61 | 0.65 | 0.65 | 0.65 | 0.65 | 0.65 | 0.69 | 0.69 | 0.69 | 0.69 | 0.69 |
| | 23°F(-5.0°C) | TC | 19233 | 19259 | 19280 | 19281 | 19307 | 20392 | 20416 | 20436 | 20440 | 20465 | 21610 | 21639 | 21663 | 21667 | 21691 | 22913 | 22937 | 22962 | 22966 | 22995 |
| | | S/T | 0.49 | 0.58 | 0.65 | 0.65 | 0.75 | 0.52 | 0.61 | 0.69 | 0.69 | 0.79 | 0.55 | 0.65 | 0.74 | 0.74 | 0.84 | 0.58 | 0.69 | 0.78 | 0.78 | 0.89 |
| | | PI | 0.75 | 0.75 | 0.75 | 0.75 | 0.75 | 0.79 | 0.80 | 0.80 | 0.80 | 0.80 | 0.84 | 0.84 | 0.84 | 0.84 | 0.85 | 0.89 | 0.89 | 0.89 | 0.89 | 0.90 |
| | 35°F(1.7°C) | TC | 19671 | 19697 | 19718 | 19719 | 19746 | 20856 | 20881 | 20902 | 20906 | 20930 | 22102 | 22131 | 22156 | 22160 | 22184 | 23434 | 23459 | 23485 | 23489 | 23518 |
| | | S/T | 0.49 | 0.58 | 0.66 | 0.66 | 0.75 | 0.52 | 0.61 | 0.70 | 0.70 | 0.79 | 0.55 | 0.65 | 0.74 | 0.74 | 0.84 | 0.59 | 0.69 | 0.78 | 0.78 | 0.89 |
| | | PI | 1.09 | 1.09 | 1.09 | 1.09 | 1.10 | 1.16 | 1.16 | 1.16 | 1.16 | 1.16 | 1.23 | 1.23 | 1.23 | 1.23 | 1.23 | 1.30 | 1.30 | 1.30 | 1.30 | 1.31 |
| | 41°F(5.0°C) | TC | 19620 | 19647 | 19668 | 19669 | 19695 | 20803 | 20827 | 20848 | 20852 | 20877 | 22045 | 22074 | 22099 | 22103 | 22127 | 23374 | 23399 | 23425 | 23428 | 23457 |
| | | S/T | 0.49 | 0.58 | 0.66 | 0.66 | 0.75 | 0.52 | 0.61 | 0.70 | 0.70 | 0.80 | 0.56 | 0.65 | 0.74 | 0.74 | 0.84 | 0.59 | 0.69 | 0.78 | 0.78 | 0.89 |
| | | PI | 1.11 | 1.11 | 1.11 | 1.11 | 1.11 | 1.17 | 1.17 | 1.18 | 1.18 | 1.18 | 1.24 | 1.24 | 1.25 | 1.25 | 1.25 | 1.32 | 1.32 | 1.32 | 1.32 | 1.32 |
| | 47°F(8.3°C) | TC | 19570 | 19596 | 19617 | 19618 | 19644 | 20749 | 20773 | 20794 | 20798 | 20823 | 21989 | 22017 | 22042 | 22046 | 22070 | 23313 | 23339 | 23364 | 23368 | 23397 |
| | | S/T | 0.50 | 0.58 | 0.66 | 0.66 | 0.75 | 0.53 | 0.62 | 0.70 | 0.70 | 0.80 | 0.56 | 0.65 | 0.74 | 0.74 | 0.85 | 0.59 | 0.69 | 0.79 | 0.79 | 0.90 |
| | | PI | 1.12 | 1.12 | 1.12 | 1.12 | 1.12 | 1.19 | 1.19 | 1.19 | 1.19 | 1.19 | 1.26 | 1.26 | 1.26 | 1.26 | 1.26 | 1.33 | 1.34 | 1.34 | 1.34 | 1.34 |
| | 50°F(10.0°C) | TC | 19794 | 19821 | 19842 | 19843 | 19870 | 20987 | 21012 | 21033 | 21037 | 21062 | 22241 | 22270 | 22295 | 22299 | 22324 | 23581 | 23607 | 23633 | 23636 | 23666 |
| | | S/T | 0.50 | 0.58 | 0.66 | 0.66 | 0.76 | 0.53 | 0.62 | 0.70 | 0.70 | 0.80 | 0.56 | 0.66 | 0.75 | 0.75 | 0.85 | 0.59 | 0.70 | 0.79 | 0.79 | 0.90 |
| | | PI | 1.13 | 1.13 | 1.13 | 1.13 | 1.13 | 1.19 | 1.20 | 1.20 | 1.20 | 1.20 | 1.27 | 1.27 | 1.27 | 1.27 | 1.27 | 1.34 | 1.34 | 1.35 | 1.35 | 1.35 |
| | 59°F(15.0°C) | TC | 20469 | 20497 | 20519 | 20520 | 20547 | 21703 | 21728 | 21750 | 21754 | 21780 | 22999 | 23029 | 23055 | 23059 | 23085 | 24385 | 24411 | 24438 | 24442 | 24472 |
| | | S/T | 0.50 | 0.59 | 0.67 | 0.67 | 0.76 | 0.53 | 0.62 | 0.71 | 0.71 | 0.81 | 0.56 | 0.66 | 0.75 | 0.75 | 0.86 | 0.60 | 0.70 | 0.80 | 0.80 | 0.91 |
| | | PI | 1.15 | 1.15 | 1.15 | 1.15 | 1.15 | 1.22 | 1.22 | 1.22 | 1.22 | 1.22 | 1.29 | 1.29 | 1.29 | 1.29 | 1.29 | 1.37 | 1.37 | 1.37 | 1.37 | 1.37 |
| | 68°F(20.0°C) | TC | 21144 | 21172 | 21195 | 21196 | 21224 | 22418 | 22444 | 22467 | 22471 | 22498 | 23757 | 23788 | 23815 | 23819 | 23846 | 25189 | 25216 | 25243 | 25247 | 25279 |
| | | S/T | 0.51 | 0.60 | 0.69 | 0.69 | 0.78 | 0.54 | 0.64 | 0.73 | 0.73 | 0.83 | 0.58 | 0.68 | 0.77 | 0.77 | 0.88 | 0.61 | 0.72 | 0.82 | 0.82 | 0.93 |
| | | PI | 1.17 | 1.17 | 1.17 | 1.17 | 1.17 | 1.24 | 1.24 | 1.24 | 1.24 | 1.24 | 1.31 | 1.32 | 1.32 | 1.32 | 1.32 | 1.39 | 1.39 | 1.40 | 1.40 | 1.40 |
| | 77°F(25.0°C) | TC | 21818 | 21848 | 21871 | 21872 | 21902 | 23133 | 23160 | 23183 | 23188 | 23215 | 24515 | 24547 | 24574 | 24579 | 24606 | 25992 | 26020 | 26049 | 26053 | 26085 |
| | | S/T | 0.52 | 0.61 | 0.69 | 0.69 | 0.79 | 0.55 | 0.65 | 0.74 | 0.74 | 0.84 | 0.59 | 0.69 | 0.78 | 0.78 | 0.89 | 0.62 | 0.73 | 0.83 | 0.83 | 0.94 |
| | | PI | 1.19 | 1.19 | 1.19 | 1.19 | 1.19 | 1.26 | 1.26 | 1.26 | 1.26 | 1.27 | 1.34 | 1.34 | 1.34 | 1.34 | 1.34 | 1.42 | 1.42 | 1.42 | 1.42 | 1.42 |
| | 82°F(27.8°C) | TC | 21796 | 21825 | 21849 | 21850 | 21879 | 23109 | 23137 | 23160 | 23164 | 23192 | 24490 | 24522 | 24549 | 24554 | 24581 | 25966 | 25994 | 26022 | 26026 | 26059 |
| | | S/T | 0.53 | 0.62 | 0.70 | 0.70 | 0.80 | 0.56 | 0.66 | 0.75 | 0.75 | 0.85 | 0.59 | 0.70 | 0.79 | 0.79 | 0.90 | 0.63 | 0.74 | 0.84 | 0.84 | 0.95 |
| | | PI | 1.27 | 1.27 | 1.27 | 1.27 | 1.27 | 1.34 | 1.35 | 1.35 | 1.35 | 1.35 | 1.42 | 1.43 | 1.43 | 1.43 | 1.43 | 1.51 | 1.51 | 1.51 | 1.51 | 1.52 |

Manufacturer reserves the right to change, at any time, specifications and designs without notice and without obligations.

# Table 10: Cooling Performance 24K (Continued)

| AIRFLOW (CFM) | OUTDOOR DB °F (℃) | ID WB°F (℃) | 60.8°F(16.0℃) | | | | | 64.4°F(18.0℃) | | | | | 67°F(19.4℃) | | | | | 71.6°F(22.0℃) | | | | |
|---|---|---|---|---|---|---|---|---|---|---|---|---|---|---|---|---|---|---|---|---|---|---|
| | | ID DB°F (℃) | 73.4°F (23.0℃) | 77.0°F (25.0℃) | 80.0°F (26.7℃) | 80.6°F (27.0℃) | 84.2°F (29.0℃) | 73.4°F (23.0℃) | 77.0°F (25.0℃) | 80.0°F 26.7℃) | 80.6°F (27.0℃) | 84.2°F (29.0℃) | 73.4°F (23.0℃) | 77.0°F (25.0℃) | 80.0°F (26.7℃) | 80.6°F (27.0℃) | 84.2°F (29.0℃) | 73.4°F (23.0℃) | 77.0°F( 25.0℃) | 80.0°F (26.7℃) | 80.6°F (27.0℃) | 84.2°F (29.0℃) |
| 706 | 86°F(30.0℃) | TC | 21277 | 21305 | 21328 | 21329 | 21358 | 22559 | 22586 | 22608 | 22613 | 22639 | 23907 | 23938 | 23965 | 23969 | 23996 | 25347 | 25375 | 25402 | 25406 | 25438 |
| | | S/T | 0.53 | 0.63 | 0.71 | 0.71 | 0.81 | 0.57 | 0.66 | 0.75 | 0.75 | 0.86 | 0.60 | 0.70 | 0.80 | 0.80 | 0.91 | 0.64 | 0.75 | 0.85 | 0.85 | 0.97 |
| | | PI | 1.41 | 1.42 | 1.42 | 1.42 | 1.42 | 1.50 | 1.50 | 1.50 | 1.50 | 1.50 | 1.59 | 1.59 | 1.59 | 1.59 | 1.59 | 1.68 | 1.69 | 1.69 | 1.69 | 1.69 |
| | 95°F(35.0℃) | TC | 20109 | 20136 | 20158 | 20159 | 20186 | 21321 | 21346 | 21367 | 21372 | 21397 | 22595 | 22624 | 22649 | 22654 | 22679 | 23956 | 23982 | 24008 | 24012 | 24042 |
| | | S/T | 0.53 | 0.63 | 0.71 | 0.71 | 0.81 | 0.57 | 0.66 | 0.75 | 0.75 | 0.86 | 0.60 | 0.70 | 0.80 | 0.80 | 0.91 | 0.64 | 0.75 | 0.85 | 0.85 | 0.97 |
| | | PI | 1.74 | 1.75 | 1.75 | 1.75 | 1.75 | 1.85 | 1.85 | 1.85 | 1.85 | 1.85 | 1.96 | 1.96 | 1.96 | 1.96 | 1.97 | 2.08 | 2.08 | 2.08 | 2.08 | 2.08 |
| | 104°F(40.0℃) | TC | 17953 | 17977 | 17997 | 17997 | 18022 | 19035 | 19058 | 19076 | 19080 | 19103 | 20172 | 20198 | 20221 | 20225 | 20247 | 21388 | 21411 | 21434 | 21438 | 21464 |
| | | S/T | 0.55 | 0.64 | 0.73 | 0.73 | 0.83 | 0.58 | 0.68 | 0.77 | 0.77 | 0.88 | 0.62 | 0.72 | 0.82 | 0.82 | 0.93 | 0.65 | 0.76 | 0.87 | 0.87 | 0.99 |
| | | PI | 1.75 | 1.75 | 1.75 | 1.75 | 1.76 | 1.86 | 1.86 | 1.86 | 1.86 | 1.86 | 1.97 | 1.97 | 1.97 | 1.97 | 1.97 | 2.09 | 2.09 | 2.09 | 2.09 | 2.09 |
| | 110°F(43.0℃) | TC | 16659 | 16682 | 16700 | 16701 | 16723 | 17663 | 17684 | 17702 | 17705 | 17726 | 18719 | 18743 | 18764 | 18767 | 18788 | 19847 | 19868 | 19890 | 19893 | 19918 |
| | | S/T | 0.57 | 0.67 | 0.76 | 0.76 | 0.86 | 0.60 | 0.71 | 0.80 | 0.80 | 0.91 | 0.64 | 0.75 | 0.85 | 0.85 | 0.97 | 0.68 | 0.79 | 0.90 | 0.90 | 1.00 |
| | | PI | 1.76 | 1.76 | 1.76 | 1.76 | 1.76 | 1.86 | 1.86 | 1.86 | 1.87 | 1.87 | 1.97 | 1.97 | 1.98 | 1.98 | 1.98 | 2.09 | 2.09 | 2.10 | 2.10 | 2.10 |
| | 115°F(46.0℃) | TC | 14998 | 15018 | 15034 | 15035 | 15055 | 15901 | 15920 | 15936 | 15939 | 15958 | 16851 | 16873 | 16892 | 16895 | 16914 | 17867 | 17886 | 17906 | 17908 | 17931 |
| | | S/T | 0.57 | 0.67 | 0.77 | 0.77 | 0.87 | 0.61 | 0.71 | 0.81 | 0.81 | 0.92 | 0.65 | 0.76 | 0.86 | 0.86 | 0.98 | 0.68 | 0.80 | 0.91 | 0.91 | 1.00 |
| | | PI | 1.71 | 1.71 | 1.71 | 1.71 | 1.71 | 1.81 | 1.81 | 1.81 | 1.81 | 1.82 | 1.92 | 1.92 | 1.92 | 1.92 | 1.92 | 2.03 | 2.04 | 2.04 | 2.04 | 2.04 |
| | 122°F(50.0℃) | TC | 12782 | 12799 | 12813 | 12813 | 12831 | 13552 | 13568 | 13582 | 13584 | 13600 | 14362 | 14380 | 14397 | 14399 | 14415 | 15227 | 15244 | 15260 | 15263 | 15282 |
| | | S/T | 0.59 | 0.69 | 0.78 | 0.78 | 0.89 | 0.62 | 0.73 | 0.83 | 0.83 | 0.95 | 0.66 | 0.77 | 0.88 | 0.88 | 1.00 | 0.70 | 0.82 | 0.93 | 0.93 | 1.00 |
| | | PI | 1.64 | 1.64 | 1.65 | 1.65 | 1.65 | 1.74 | 1.74 | 1.75 | 1.75 | 1.75 | 1.85 | 1.85 | 1.85 | 1.85 | 1.85 | 1.96 | 1.96 | 1.96 | 1.96 | 1.96 |

## LEGEND

TC: Total Cooling Capacity (BTU/hr)
S/T: Sensible Cooling Capacity Ratio
PI: Power Input (kW)

Manufacturer reserves the right to change, at any time, specifications and designs without notice and without obligations.

# APPLICATION DATA

## Unit Selection

Select equipment that either matches or supports slightly more than the anticipated peak load. This provides better humidity control, fewer unit cycles, and less part-load operation.

For units used in spaces with high sensible loads, base equipment selection on unit sensible load, not on total anticipated load. Adjust for anticipated room wet bulb temperature to avoid undersizing the equipment.

## Unit Mounting (Outdoor)

Refer to the unit's installation instructions for further details.

**Unit leveling** - For reliable operation, units should be level in all planes.

**Clearance** - Minimum clearance (see Fig. 5 — on page 8) must be provided for airflow. The condensing units are designed for free-flow application. Air inlets and outlets should not be restricted.

**Unit location** - A location which is convenient to installation and not exposed to strong winds. A location that can bear the weight of the outdoor unit and where the outdoor unit can be mounted in a level position.

Do not install the indoor or outdoor units in a location with special environmental conditions. For those applications, contact your sales representative.

### System Operating Conditions

| OPERATING RANGE MIN / MAX °F (°C) | |
|---|---|
| | Cooling |
| Outdoor DB | 5 ~ 122 (-15 ~ 50) |

**NOTE: Reference the product installation instructions for more information.**

## Metering Devices

The outdoor unit utilizes a capillary tube to manage the connected fan coil's refrigerant flow.

## Drain Connections

Install drains to meet the local sanitation codes.

## Refrigerant Lines

### General refrigerant line sizing:

1. The outdoor units are shipped with a full charge of R-454B refrigerant. All charges, line sizing, and capacities are based on runs of 25 ft. (7.6 m). For runs over 25 ft. (7.6 m), review the *Long Line Applications* section for the proper charge adjustments.
2. Refrigerant lines should not be buried in the ground. If it is necessary to bury the lines, do not bury more than 36−in (914 mm). Provide a minimum 6−in (152 mm) vertical rise to the service valves to prevent refrigerant migration.
3. Both lines must be insulated. Use a minimum of 1/2−in. (12.7 mm) thick insulation. Closed−cell insulation is recommended in all long−line applications.
4. Special consideration should be given to isolating the interconnecting tubing from the building structure. Isolate the tubing so vibration or noise is not transmitted into the structure.

### Long Line Applications:

1. No change in line sizing is required.
2. Add refrigerant per the **Additional Charge** table .

| UNIT SIZE | INDOOR UNIT METERING DEVICE | TOTAL LINE LENGTH FT(M) | | ADDITIONAL CHARGE, OZ/FT. FT(M) | | | | |
|---|---|---|---|---|---|---|---|---|
| | | Min | Max | 10-24.6 (3-7.5) | >24.6-82 (7.5-25) | >82-98.4 (25-30) | >98.4-164 (30-50) | >164-213.2 (50-65) |
| 9 | None | 10 (3) | 82(25) | None | 0.16 (15) | | | |
| 12 | | | | | | | | |
| 18 | | | 98.4 (30) | | 0.16 (15) | | | |
| 24 | | | 164 (50) | | 0.32 | | | |

# WIRING

All wires must be sized per NEC (National Electrical Code) or CEC (Canadian Electrical Code) and local codes. Use Electrical Data table MCA (minimum circuit amps) and MOCP (maximum over current protection) to correctly size the wires and the disconnect fuse or breakers respectively.

**Recommended Connection Method for Power and Communication Wiring:**

The main power is supplied to the outdoor unit. The field supplied 14/3 stranded wire with ground with a 600 volt insulation rating, power/communication wiring from the outdoor unit to indoor unit consists of four (4) wires and provides the power for the indoor unit.

Two wires are line voltage AC power, one is communication wiring (S) and the other is a ground wire. Wiring between indoor and outdoor unit is polarity sensitive. The use of BX wire is NOT recommended.

If installed in a high Electromagnetic field (EMF) area and communication issues exists, a 14/2 stranded shielded wire can be used to replace L2/N and (S) between outdoor unit and indoor unit landing the shield onto ground in the outdoor unit only.

**CAUTION**

**EQUIPMENT DAMAGE HAZARD**

Failure to follow this caution may result in equipment damage or improper operation.

Wires should be sized based on NEC and local codes.

**CAUTION**

**EQUIPMENT DAMAGE HAZARD**

Failure to follow this caution may result in equipment damage or improper operation.

Be sure to comply with local codes while running wire from the indoor unit to the outdoor unit.

Every wire must be connected firmly. Loose wiring may cause the terminal to overheat or result in unit malfunction. A fire hazard may also exist. Ensure all wiring is tightly connected.

No wire should touch the refrigerant tubing, compressor or any moving parts.

Disconnecting means must be provided and shall be located within sight and readily accessible from the air conditioner.

Connecting cable with conduit shall be routed through the hole in the conduit panel.

## Air Flow Data - Cooling Only

| COOLING ONLY | 12K (115 V) | 9K (208/230V) | 12K (208/230V) | 18K (208/230V) | 24K (208/230V) |
|---|---|---|---|---|---|
| Outdoor (CFM) | 1059 | 1059 | 1059 | 1236 | 1354 |

## Sound Data - Cooling Only

| COOLING ONLY | | 12K (115 V) | 9K (208/230 V) | 12K (208/230 V) | 18K (208/230 V) | 24K (208/230 V) |
|---|---|---|---|---|---|---|
| Outdoor Sound Pressure Level | dB(A) | 54 | 52 | 53 | 57 | 57 |

## Outdoor Unit Sound Pressure Test Conditions

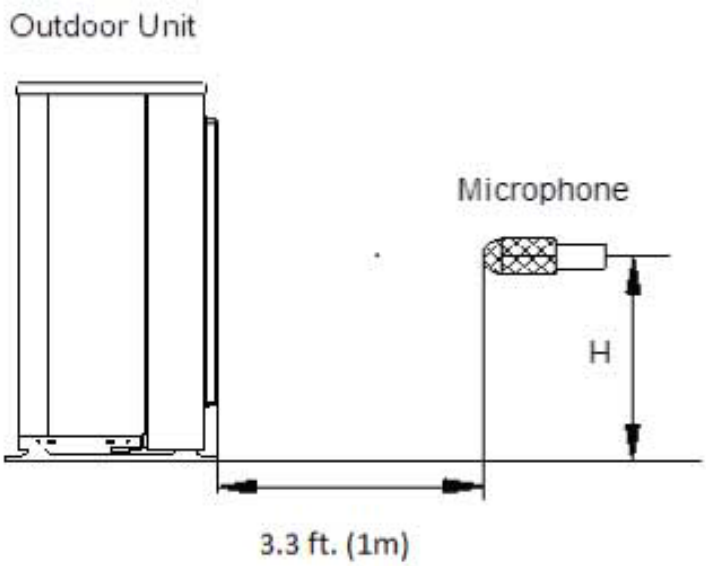


**Fig. 7 — Outdoor Unit Sound Pressure Test Conditions**

# ELECTRICAL DATA - COOLING ONLY

### Table 11: Electrical Data

| OUTDOOR UNIT | | 12K 115V | 9K | 12K | 18K | 24K |
|---|---|---|---|---|---|---|
| | | (115V) | (208/230V) | (208/230V) | (208/230V) | (208/230V) |
| **MINIMUM CIRCUIT AMPACITY (MCA)** | A | 19 | 9.9 | 14 | 16 | 19 |
| **MAXIMUM OVERCURRENT PROTECTION AMPACITY (MOPA)** | A | 20 | 15 | 15 | 20 | 20 |
| **VOLTAGE-PHASE-FREQUENCY** | | 115-1-60 | 208/230-1-60 | | | |
| **MAX – MIN VOLTAGE RANGE** | | 127-104 | 253-187 | | | |
| **COOLING (WITH ENTRY TIER HIGH WALL CO IDU)** | | | | | | |
| **RUNNING CURRENT** | (A) | 10.3 | 5.1 | 4.3 | 6.8 | 8.7 |
| **POWER CONSUMPTION** | (W) | 958 | 720 | 958 | 1549 | 2157 |

# Fan and Motor Specifications - Cooling Only

## Table 12: Fan and Motor Specifications

| COOLING ONLY UNIT SIZE | | | 12K 115V | 9K | 12K | 18K | 24K |
|---|---|---|---|---|---|---|---|
| OUTDOOR MODEL | | | 37MHRAC12AA1 | 37MHRAC12AA1 | 37MHRAC12AA1 | 37MHRAC12AA1 | 37MHRAC12AA1 |
| POWER SUPPLY | | V; Ph;Hz | 115V;1 Ph;60HZ | 208/230V; 1Ph;60HZ | 208/230V; 1Ph;60HZ | 208/230V; 1Ph;60HZ | 208/230V; 1Ph;60HZ |
| COMPRESSOR SPECIFICATIONS | Model | | KSK103D33UEZ3 | KSK103D33UEZ3 | KSK103D33UEZ3 | KSN140D58UFZ | KSN140D58UFZ |
| | Type | | ROTARY | ROTARY | ROTARY | ROTARY | ROTARY |
| | Brand | | GMCC | GMCC | GMCC | GMCC | GMCC |
| | Capacity | W | 2035/3255 | 2035/3255 | 2035/3255 | 4315 | 4315 |
| | | Btu/h | 6943/11106 | 6943/11106 | 6943/11106 | 14723 | 14723 |
| | Input | W | 325/826 | 325/826 | 325/826 | 1090 | 1090 |
| | Rated current | A | 2.40/5.65 | 2.40/5.65 | 2.40/5.65 | 7.2 | 7.2 |
| | Refrigerant Oil | | ESTER OIL | ESTER OIL | ESTER OIL | ESTER OIL | ESTER OIL |
| | Oil Type | | VG74 | VG74 | VG74 | VG74 | VG74 |
| | Oil Charge | fl. Oz | 10.48 | 10.48 | 10.48 | 14.88 | 14.88 |
| OUTDOOR FAN SPECIFICATIONS | Material | - | Acrylonitrile Styrene +20%GF | Acrylonitrile Styrene +20%GF | Acrylonitrile Styrene +20%GF | Acrylonitrile Styrene +20%GF | Acrylonitrile Styrene +20%GF |
| | Type | - | ZL-415*129*8-3KN | ZL-415*129*8-3KN | ZL-415*129*8-3KN | ZL-421*133*8-3KN | ZL-434*144*8-3KN |
| | Diameter | inch | 16.3 | 16.3 | 16.3 | 16.6 | 17.1 |
| | | mm | 415 | 415 | 415 | 421 | 434 |
| | Height | inch | 5.1 | 5.1 | 5.1 | 5.2 | 5.7 |
| | | mm | 129 | 129 | 129 | 133 | 144 |
| OUTDOOR MOTOR SPECIFICATIONS | Model | - | ZKFN-34-10-1-9 | ZKFN-34-10-1-9 | ZKFN-34-10-1-9 | ZKFN-34-10-1-9 | ZKFN-34-10-1-9 |
| | Type | - | DC | DC | DC | DC | DC |
| | Input | W | 35.4 | 35.4 | 35.4 | 35.4 | 62.0 |
| | Max. input | W | 81.3 | 81.3 | 81.3 | 81.3 | 81.3 |
| | Output | W | 26.6 | 26.6 | 26.6 | 26.6 | 46.5 |
| | FLA (The rated current of the conversion equipment) | A | 0.7 | 0.5 | 0.34 | 0.45 | 0.62 |
| | Rated HP | HP | 0.04 | 0.04 | 0.04 | 0.04 | 0.06 |
| | Range of current | Amps | 0.57~0.85 | 0.57~0.85 | 0.57~0.85 | 0.57~0.85 | 0.57~0.85 |
| | Rated current | Amps | 0.62 | 0.62 | 0.62 | 0.62 | 0.75 |
| | Speed | rev/min | 850/700/600 | 800/700/600 | 850/700/600 | 810/700/450 | 950/700/600 |
| | Rated RPM | rev/min | 850 | 800 | 850 | 810 | 950 |
| | Insulation class | - | E | E | E | E | E |
| | Safe class | - | IP24 | IP24 | IP24 | IP24 | IP24 |

**Manufacturer reserves the right to change, at any time, specifications and designs without notice and without obligations.**

# WIRING DIAGRAMS

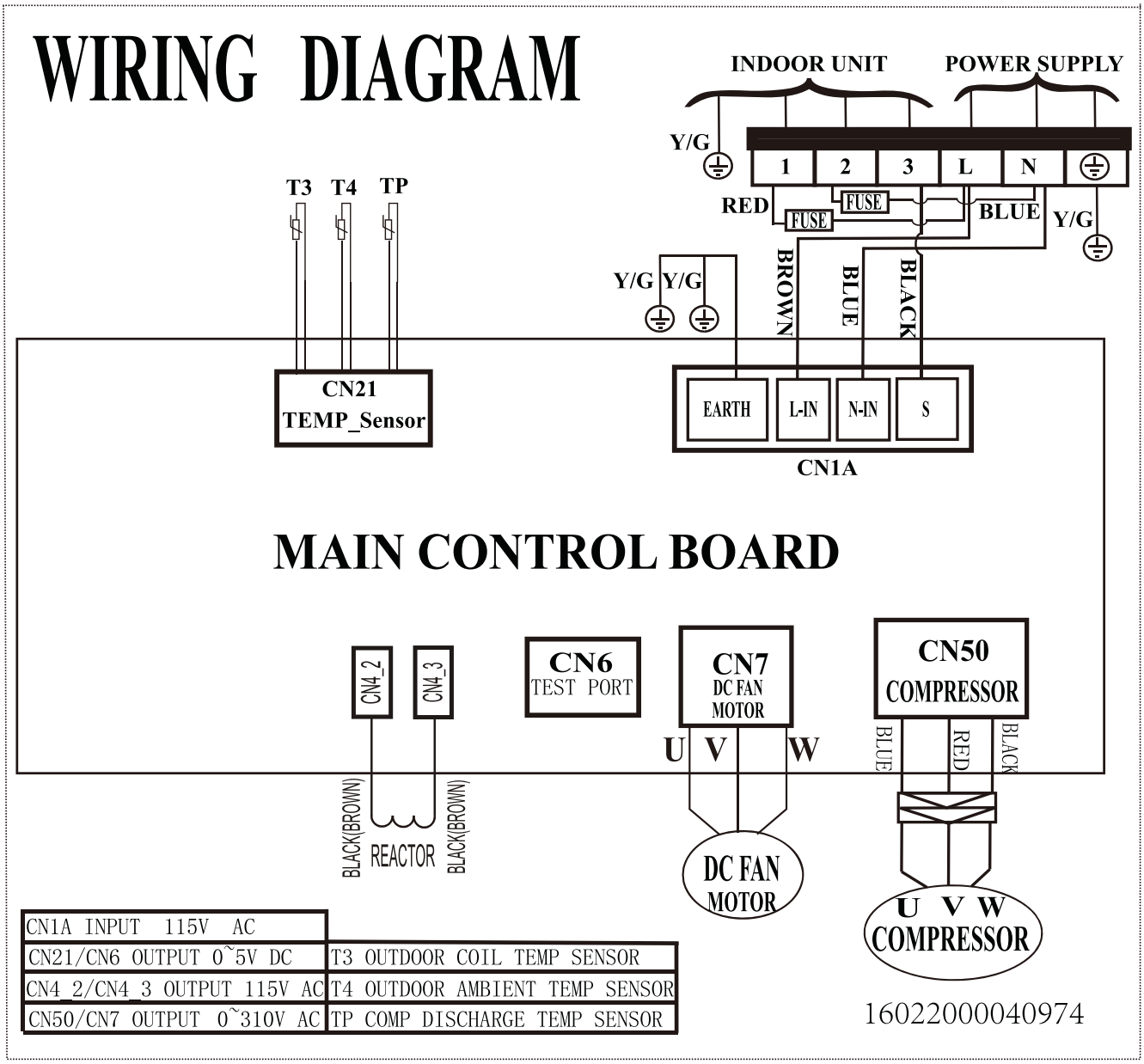


**Fig. 8 — Wiring Diagram - Size 12K (115V)**

# WIRING DIAGRAMS (CONTINUED)

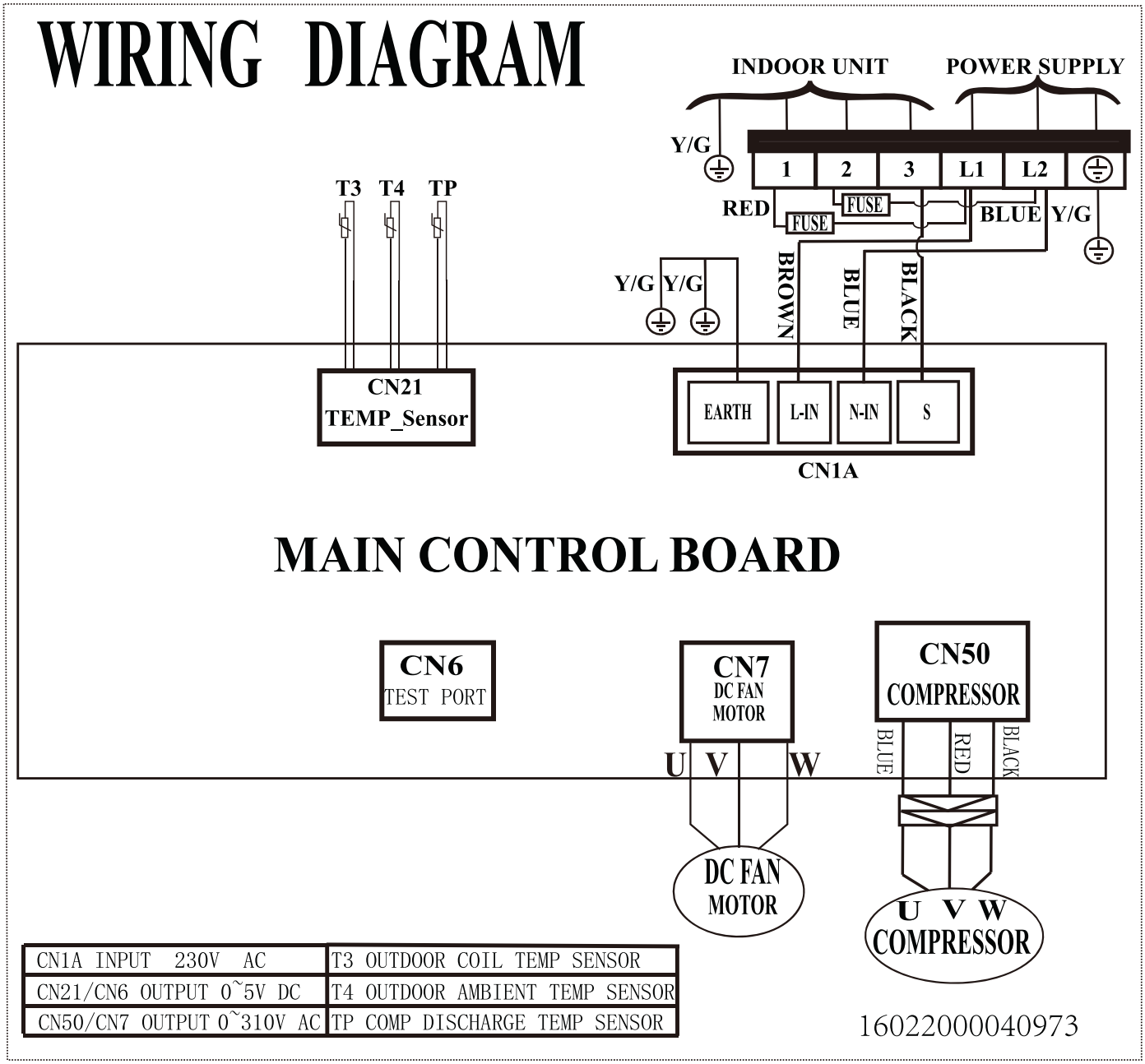


**Fig. 9 — Wiring Diagram Sizes - 9-18K (208-230V)**

# WIRING DIAGRAMS (CONTINUED)

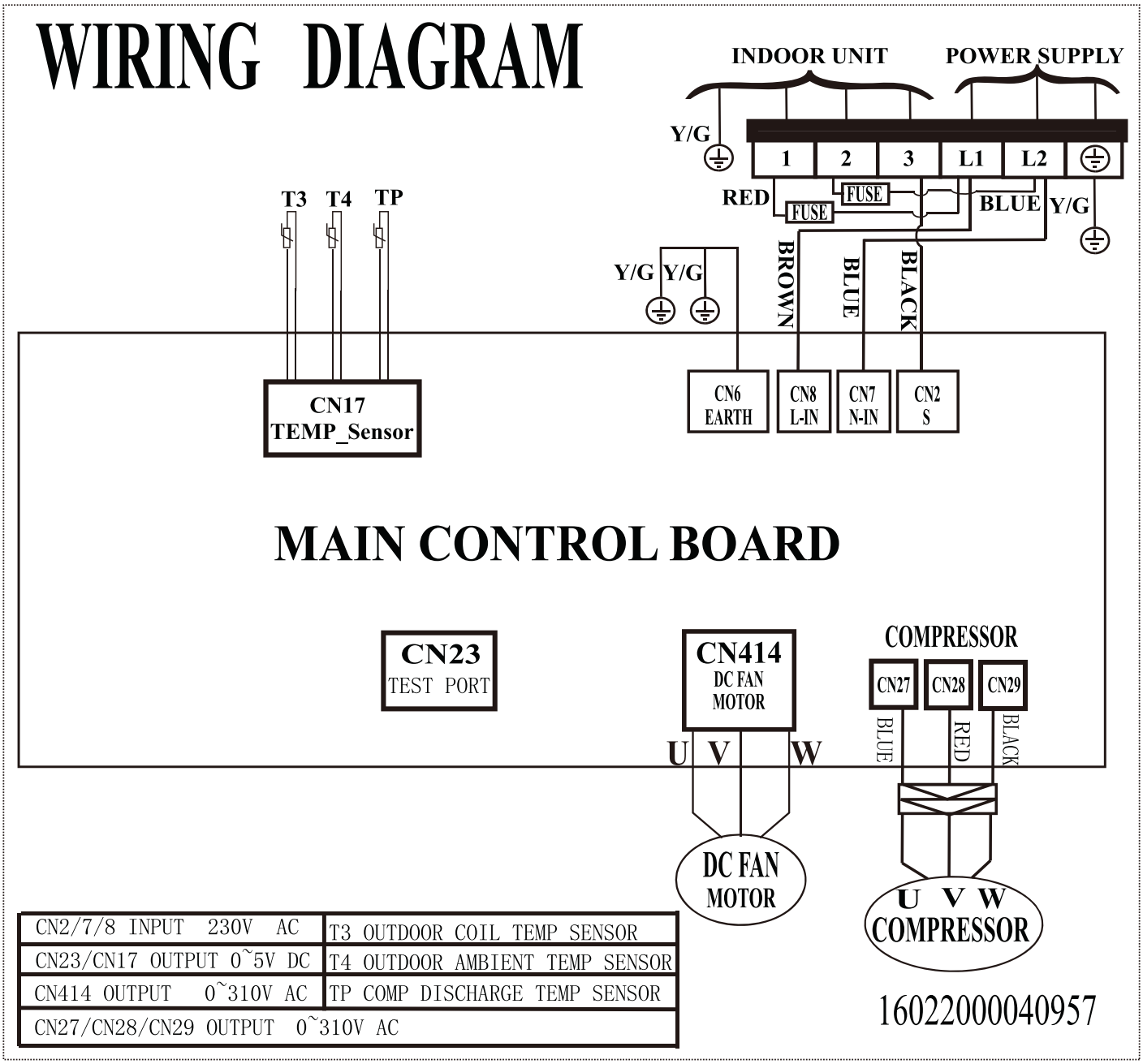


**Fig. 10 — Wiring Diagram - Size 24K (230V)**

# GUIDE SPECIFICATIONS

## HORIZONTAL DISCHARGE OUTDOOR UNITS

Size Range: 3/4 to 2 Ton Nominal Cooling Capacity Model Number: **37MHRAC**

## Part 1 - GENERAL

### 1.01 System Description

1. Outdoor air-cooled split system compressor sections suitable for on-the-ground, rooftop, wall hung or balcony mounting. Units consist of a rotary compressor, an air-cooled coil, propeller-type draw-through outdoor fan, metering device(s), and a control box. Units discharge air horizontally as shown on the contract drawings. Units function as the outdoor component of an air-to-air condensing unit.
2. Units are to be used in a refrigeration circuit matched to ductless heat pump fan coil units.

### 1.02 Agency Listings

1. Unit construction complies with ANSI/ASHRAE 15, latest revision, and with the NEC.
2. Units are evaluated in accordance with UL standard 60335-2-40.
3. Units are listed in the CEC directory.
4. Unit cabinet is capable of withstanding 500-hour salt spray test per Federal Test Standard No. 141 (method 6061).
5. Air-cooled condenser coils are leak tested at 550 psig.

### 1.03 Delivery, Storage, And Handling

Units are shipped in one piece and are stored and handled per unit manufacturer's recommendations.

### 1.04 Warranty (For Inclusion By Specifying Engineer)

## Part 2 - PRODUCTS

### 2.01 Equipment

A. **General:**

Factory assembled, single piece, air-cooled outdoor unit. Contained within the unit enclosure is all the factory wiring, piping, controls, and the compressor.

B. **Unit Cabinet:**

1. Unit cabinet is constructed of galvanized steel, bonderized and coated with a baked-enamel finish on the inside and outside.
2. Unit access panels is removable with minimal screws and provides full access to the compressor, fan, and control components.
3. The outdoor compartment is isolated and has an acoustic lining to assure quiet operation.

C. **Fans:**

1. Outdoor fans are the direct drive propeller type, and discharges air horizontally. Fans draw air through the outdoor coil.
2. Outdoor fan motors are totally enclosed, single phase motors with class E insulation and permanently lubricated ball bearings. Motor shall be protected by internal thermal overload protection.
3. The shaft has inherent corrosion resistance.
4. Fan blades are non-metallic and statically and dynamically balanced.
5. Outdoor fan openings are equipped with a PVC metal/mesh coated protection grille over the fan.

D. **Compressor:**

1. Compressor is the fully hermetic rotary type.
2. Compressor is equipped with an oil system, operating oil charge, and a motor.
3. Motor is NEMA rated class E, suitable for operation in a refrigerant atmosphere.
4. Compressor assembly is installed on rubber vibration isolators.

E. **Outdoor Coil:**

The coil is constructed of aluminum hydrophilic pre-coated fins mechanically bonded to seamless copper tubes, which are cleaned, dehydrated, and sealed.

F. **Refrigeration Components:**

Refrigerant circuit components include a brass external liquid line service valve with service gage port connections, a suction line service valve with a service gage connection port, service gage port connections on compressor suction and discharge lines with Schrader type fittings with brass caps, accumulator, reversing valve.

G. **Controls and Safeties:**

Operating controls and safeties are factory selected, assembled, and tested. The minimum control functions include the following:

1. Controls:
   - A time delay control sequence is provided standard through the fan coil board
   - Automatic outdoor fan motor protection.
2. Safeties:
   - System diagnostics
   - Compressor motor current and temperature overload protection
   - Outdoor fan failure protection.

H. **Electrical Requirements:**

1. Unit operates on single-phase, 60 Hz power at 115V for unit size 12 and 208/230V for unit sizes 09, 12, 18, 24 as specified.
2. Unit electrical power has a single point connection.
3. Unit Control voltage to the indoor fan coil is 0-15V DC.
4. All power and control wiring must be installed per NEC and all local electrical codes.
5. The unit has high and low voltage terminal block connections.

**Manufacturer reserves the right to change, at any time, specifications and designs without notice and without obligations.**

© 2026 Carrier. All rights reserved.

**Manufacturer reserves the right to change, at any time, specifications and designs without notice and without obligations.**