# 45MHHAQ/C
# High Wall Ductless System
# Heat Pump Sizes 9K to 36K
# Cooling Only Sizes 9k to 24K

# Product Data

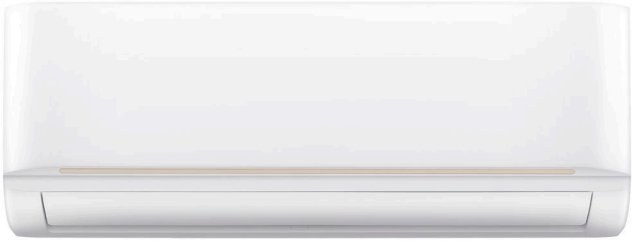

**Fig. 1 —Sizes 09K - 36K**

**NOTE: Images are for illustration purposes only. Actual models may differ slightly.**

## TABLE OF CONTENTS


PAGE

INDUSTRY LEADING FEATURES / BENEFITS ..... 1
MODEL NUMBER NOMENCLATURE ..... 3
STANDARD FEATURES AND ACCESSORIES ..... 4
DIMENSIONS ..... 5
CLEARANCES ..... 7
SPECIFICATIONS (HEAT PUMP) ..... 8
SPECIFICATIONS (COOLING ONLY) ..... 9
APPLICATION DATA ..... 10
WIRING ..... 11
CONTROL SYSTEM ..... 11
AIRFLOW DATA (Heat Pump) ..... 13
AIRFLOW DATA (Cooling Only) ..... 14
WIRING DIAGRAM ..... 15
GUIDE SPECIFICATIONS ..... 19


## INDUSTRY LEADING FEATURES / BENEFITS

### A PERFECT BALANCE BETWEEN BUDGET LIMITS, ENERGY SAVINGS AND COMFORT.

The 45MHHA series ductless systems are a matched combination of an outdoor condensing unit and an indoor fan coil unit connected only by refrigerant tubing and wires.

The fan coil is mounted on the wall, near the ceiling. This selection of fan coils permits creative solutions to design problems such as:

- Add-ons to current space (an office or family room addition)
- Special space requirements
- When changes in the load cannot be handled by the existing system
- When adding air conditioning to spaces that are heated by hydronic or electric heat and have no ductwork
- Historical renovations or any application where preserving the look of the original structure is essential.

The ideal compliment to your ducted system when it is impractical or prohibitively expensive to use ductwork. These compact indoor fan coil units take up very little space in the room and do not obstruct windows. The fan coils are attractively styled to blend with most room decors.

Advanced system components incorporate innovative technology to provide reliable cooling performance at low sound levels.

## LOW SOUND LEVELS

When noise is a concern, the ductless systems are the answer. The indoor units are whisper quiet. There are no compressors indoors, either in the conditioned space or directly over it, and there is none of the noise usually generated by air being forced through ductwork.

## SECURE OPERATION

If security is an issue, outdoor and indoor units are connected only by refrigerant piping and wiring to prevent intruders from crawling through ductwork. In addition, since the outdoor units can be installed close to an outside wall, coils are protected from vandals and severe weather.

## FAST INSTALLATION

This compact ductless system is simple to install. A mounting bracket is standard with the indoor units and only wire and piping need to be run between the indoor and outdoor units. These units are fast and easy to install ensuring minimal disruption to customers in the home or workplace. This makes the 45MHHA ductless systems the equipment of choice, especially in retrofit situations.

## SIMPLE SERVICING AND MAINTENANCE

Removing the top panel on outdoor units provides immediate access to the control compartment, providing a service technician access to check unit operation. In addition, the draw-thru design of the outdoor section means that dirt accumulates on the outside surface of the coil. Coils can be cleaned quickly from the inside using a pressure hose and detergent.

On all indoor units, the New Removable Blower assembly and Hood Style cover make maintenance and service less complicated. Additionally, due to Newly Designed, easy-to-use and cleanable filters, service and maintenance expense is reduced. In addition, these high wall systems have extensive self-diagnostics to assist in troubleshooting.

## BUILT-IN RELIABILITY

Ductless system indoor and outdoor units are designed to provide years of trouble-free operation.

The high wall indoor units include protection against freeze-up and high evaporator temperatures on heat pumps.

The condensing units on heat pumps are protected by a three minute time delay before the compressor starts the over-current protection and the high temperature protection.

## INDIVIDUAL ROOM COMFORT

Maximum comfort is provided because each space can be controlled individually based on usage pattern. Each unit is equipped with a New Humidity Sensor to keep your space comfortable. Year-round comfort can be provided with heat pumps.

## ECONOMICAL OPERATION

The ductless system design allows individual room heating or cooling when required. There is no need to run large supply-air fans or chilled water pumps to handle a few spaces with unique load patterns. In addition, because air is moved only in the space required, no energy is wasted while air moves through the ducts.

## EASY-TO-USE CONTROLS

The high wall units have microprocessor-based controls to provide the ultimate in comfort and efficiency. The user friendly wireless remote control provides the interface between the user and the unit.

## ACCESSORIES

Customizing these ductless systems to your application is easily accomplished. Adding a condensate pump accessory to the high wall fan coil provides installation flexibility.

## OPTIONAL WIRED CONTROLLER (KSACN1401AAA, KSACN1201AAA)

Optional 24V Interface for 3rd Party Control
Optional Wireless Kit for Smart Phone Control

## AGENCY LISTING

All systems are listed with AHRI (Air Conditioning, Heating & Refrigeration Institute), and ETL.

**Manufacturer reserves the right to change, at any time, specifications and designs without notice and without obligations.**

# MODEL NUMBER NOMENCLATURE

INDOOR UNIT

45 MH H A Q 09 X C 3

**45** = INDOOR UNIT

**MH** = MODEL

**INDOOR UNIT FAN COIL UNIT TYPE**
**H** = HIGH WALL

**MAJOR SERIES**

**INDOOR FAN COIL TYPE**
**Q** = HEAT PUMP C = COOLING ONLY

**NOMINAL CAPACITY**
**09** - 3/4 TON
**12** - 1 TON
**18** - 1-1/2 TONS
**24** - 2 TONS
30 - 2-1/2 TONS
36 - 3 TONS

**VOLTAGE**
**1** = 115-1-60
**3** = 208/230-1-60

**VARIATIONS**
**C** = NO FACTORY INSTALLED LEAK DETECTION SENSOR

**X** = INDOOR

Use of the AHRI Certified TM Mark indicates a manufacturer's participation in the program For verification of certification for individual products, go to www.ahridirectory.org.

# STANDARD FEATURES AND ACCESSORIES

## Table 1 — Standard Accessories

| | |
|---|---|
| **Ease Of Installation** | |
| Mounting Brackets | S |
| Stencil Template | S |
| Low Voltage Controls | S |
| **Comfort Features** | |
| Microprocessor Controls | S |
| Wired Remote Controller | A |
| Wi-Fi Control | A |
| Wireless Remote Controller | S |
| Automatic Up-Down Airflow Louver Swing | S |
| Air Direction Control | S |
| Auto Restart Function | S |
| Cold Blow Protection On Heat Pumps | S |
| Freeze Protection Mode on Heat Pumps | S |
| Turbo Mode | S |
| Silence Mode | S |
| Auto Changeover on Heat Pumps | S |
| Follow Me | S |
| ECO Mode | S |
| Breeze Away | S |
| **Energy Saving Features** | |
| Sleep Mode | S |
| Stop/Start Timer | S |
| 46° F Heating Mode (Heating Setback) | S |
| **Safety And Reliability** | |
| Indoor Coil Freeze Protection | S |
| Indoor Coil High Temp Protection in Heating Mode | S |
| Aluminum Hydrophilic pre-coated fins | S |
| **Ease Of Service And Maintenance** | |
| Diagnostics | S |
| Cleanable Filters | S |
| **Application Flexibility** | |
| Condensate Pumps | A |

Legend
S - Standard
A - Accessory

## Table 2 — Accessories

| ACCESSORY NO. | DESCRIPTION | FOR MODELS |
|---|---|---|
| KSAIF0701AAA | Wi-Fi™ Kit High Wall | All Sizes |
| KSAIC0601230 | Mini 24V Interface Kit 230V | 208/230V Models |
| KSACN1201AAA | Wired Remote Control | All Sizes |
| KSAIC0501230 | 24V Interface Kit 230V | 208/230V models |
| KSACN1401AAA | Wired Remote Control 7 Day Programmable | All Sizes |

**Manufacturer reserves the right to change, at any time, specifications and designs without notice and without obligations.**

# DIMENSIONS

## 45MHHAQ (Heat Pump)

**Table 3 — Dimensions - Heat Pump Models**

| System Size | | 9K 115V | 12K 115V | 9K | 12K | 18K | 24K | 30K | 36K |
|---|---|---|---|---|---|---|---|---|---|
| | | (115 V) | (115 V) | (208/230 V) | (208/230 V) | (208/230 V) | (208/230 V) | (208/230 V) | (208/230 V) |
| Height (H) | inch | 11.5 | 11.61 | 11.5 | 11.61 | 12.64 | 13.27 | 14.25 | 14.25 |
| | mm | 292 | 295 | 292 | 295 | 321 | 337 | 362 | 362 |
| Width (W) | inch | 28.7 | 31.57 | 28.7 | 31.57 | 38.23 | 42.6 | 49.57 | 49.57 |
| | mm | 729 | 802 | 729 | 802 | 971 | 1082 | 1259 | 1259 |
| Depth (D) | inch | 7.87 | 7.87 | 7.87 | 7.87 | 8.98 | 9.21 | 11.14 | 11.14 |
| | mm | 200 | 200 | 200 | 200 | 228 | 234 | 283 | 283 |
| Weight -Net | lbs. | 18.3 | 19.4 | 18.08 | 18.96 | 25.35 | 30.64 | 43.43 | 43.43 |
| | kg | 8.3 | 8.8 | 8.2 | 8.6 | 11.5 | 13.9 | 19.7 | 19.7 |

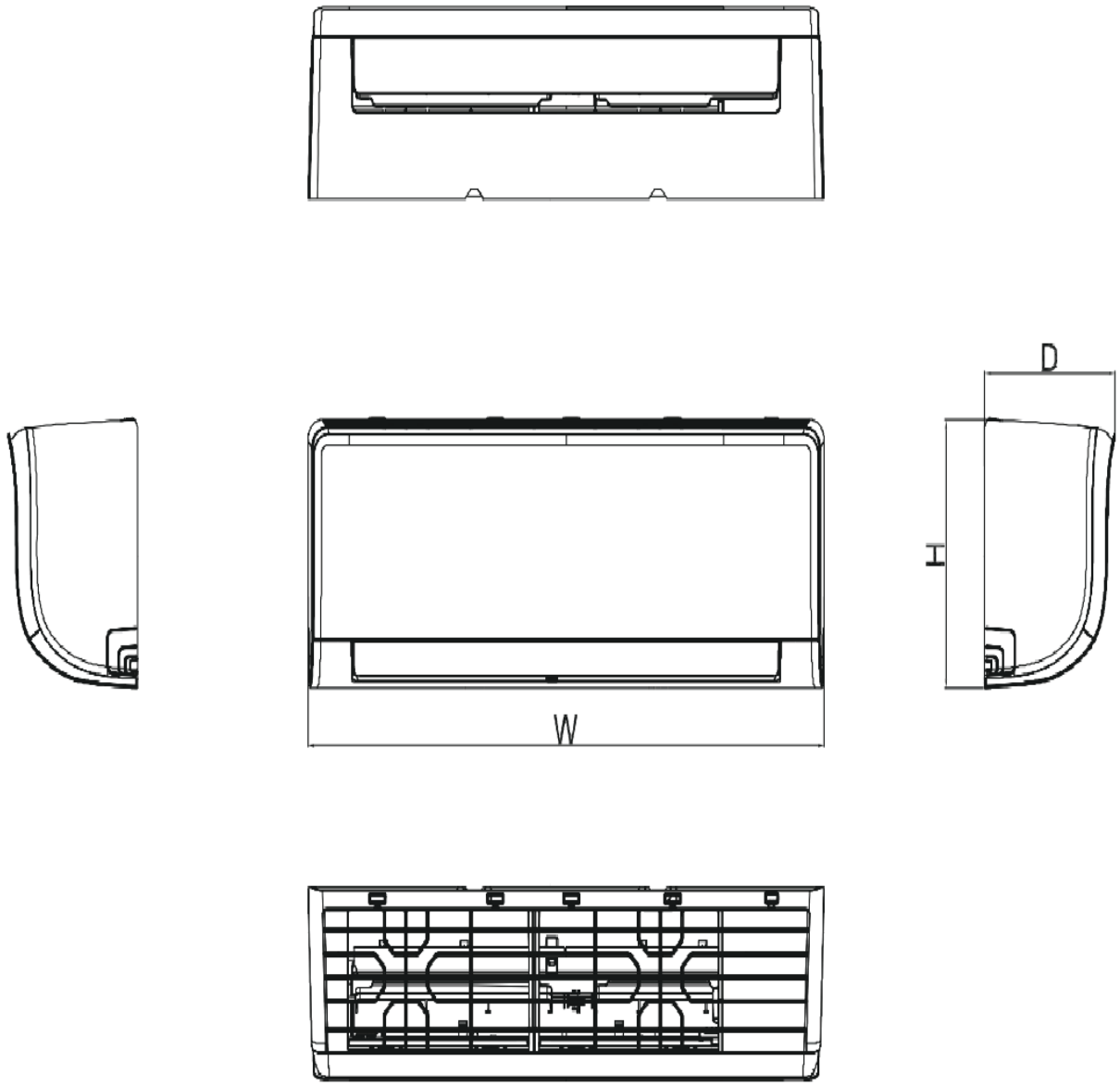


**Fig. 2 — All Sizes (Heat Pump)**

# 45MHHAC (Cooling Only)

**Table 4 — Dimensions - Cooling Only Models**

| SYSTEM SIZE | | 12K 115V | 9K | 12K | 18K | 24K |
|---|---|---|---|---|---|---|
| | | (115 V) | (208/230 V) | (208/230 V) | (208/230 V) | (208/230 V) |
| Height (H) | inch | 11.61 | 11.5 | 11.61 | 12.64 | 13.27 |
| | mm | 295 | 292 | 295 | 321 | 337 |
| Width (W) | inch | 31.57 | 28.7 | 31.57 | 38.23 | 42.6 |
| | mm | 802 | 729 | 802 | 971 | 1082 |
| Depth (D) | inch | 7.87 | 7.87 | 7.87 | 8.98 | 9.21 |
| | mm | 200 | 200 | 200 | 228 | 234 |
| Weight -Net | lbs. | 19.62 | 18.08 | 19.62 | 24.91 | 30.86 |
| | kg | 8.9 | 8.2 | 8.9 | 11.3 | 14 |

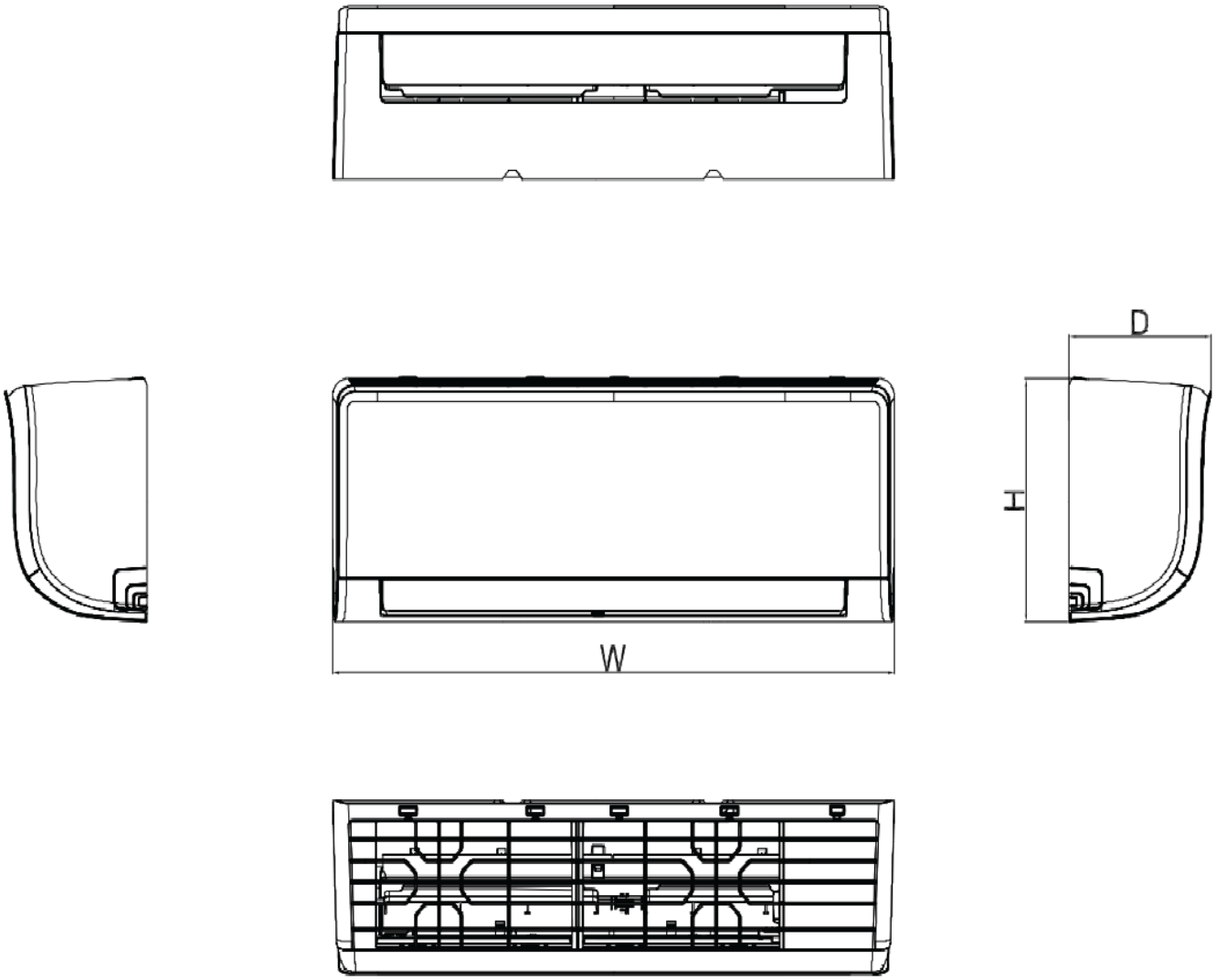


**Fig. 3 — All Sizes (Cooling Only)**

# CLEARANCES

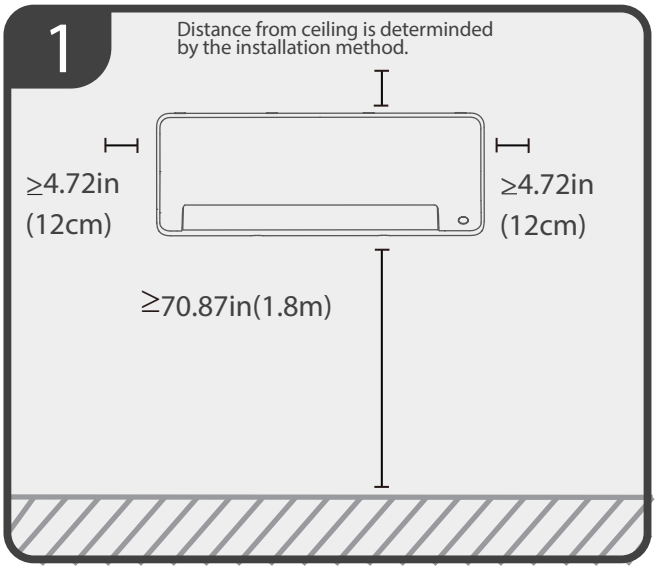


**Fig. 4 — Indoor Unit Clearances**

# SPECIFICATIONS (HEAT PUMP)

## Table 5 — Fan and Motor Specifications

| INDOOR UNIT MODEL | | | 45MHHAQ09XC1 | 45MHHAQ12XC1 | 45MHHAQ09XC3 | 45MHHAQ12XC3 | 45MHHAQ18XC3 | 45MHHAQ24XC3 | 45MHHAQ30XC3 | 45MHHAQ36XC3 |
|---|---|---|---|---|---|---|---|---|---|---|
| POWER SUPPLY | | V;Ph;Hz | 115V;1Ph;60HZ | 115V;1Ph;60HZ | 208/230V;1Ph;60HZ | 208/230V;1Ph;60HZ | 208/230V;1Ph;60HZ | 208/230V;1Ph;60HZ | 208/230V;1Ph;60HZ | 208/230V;1Ph;60HZ |
| INDOOR FAN SPECIFICATIONS | Material | - | Acrylontrile Styrene +30%G | Acrylontrile Styrene +30%G | Acrylontrile Styrene +30%G | Acrylontrile Styrene +30%G | Acrylontrile Styrene +30%G | Acrylontrile Styrene +30%G | Acrylontrile Styrene +30%G | Acrylontrile Styrene +30%G |
| | Type | - | GL-94*530-N | GL-96*608-IN | GL-94*530-N | GL-96*608-IN | GL-98*758-I | GL-108*818 | GL-118*955-I | GL-118*955-I |
| | Diameter | inch | 3.7 | 3.9 | 3.7 | 3.9 | 3.9 | 4.3 | 4.6 | 4.6 |
| | | mm | 94 | 98 | 94 | 98 | 98 | 108 | 118 | 118 |
| | Height | inch | 20.9 | 23.9 | 20.9 | 23.9 | 29.8 | 32.2 | 37.6 | 37.6 |
| | | mm | 530 | 608 | 530 | 608 | 758 | 818 | 955 | 955 |
| INDOOR MOTOR SPECIFICATIONS | Model | - | ZKFP-20-8-113 | ZKFP-20-8-113 | ZKFP-20-8-6-7 | ZKFP-30-8-357L | ZKFP-30-8-3-10 | ZKFP-58-8-20L | ZKFP-58-8-1-10 | ZKFP-58-8-1-10 |
| | Type | - | DC | DC | DC | DC | DC | DC | DC | DC |
| | Input | W | 21.6 | 12.4 | 21.6 | 27.5 | 31 | 68.2 | 82 | 82 |
| | Max. input | W | 52.3 | 52.3 | 52.3 | 67.0 | 70.0 | 112.5 | 102 | 102 |
| | Output | W | 16.2 | 9.3 | 16.2 | 20.6 | 23.3 | 51.2 | 61.5 | 61.5 |
| | FLA | A | 0.45 | 0.6 | 0.36 | 0.41 | 0.48 | 0.58 | 0.65 | 0.65 |
| | Rated HP | HP | 0.02 | 0.01 | 0.02 | 0.03 | 0.03 | 0.07 | 0.08 | 0.08 |
| | Range of current | Amps | 0.064~0.373 | 0.064~0.373 | 0.064~0.373 | 0.14~0.62 | 0.14~0.58 | 0.39~0.97 | 0.27~0.96 | 0.27~0.96 |
| | Rated current | Amps | 0.16 | 0.1 | 0.16 | 0.29 | 0.28 | 0.61 | 0.78 | 0.78 |
| | Speed | rev/min | 1050/810/690 | 850/750/450 | 1050/900/700 | 1150/990/910 | 1200/1000/900 | 1100/940/780 | 1200/1050/950 | 1200/960/600 |
| | Rated RPM | rev/min | 1050 | 850 | 1050 | 1150 | 1200 | 1100 | 1200 | 1200 |
| | Insulation class | - | E | E | E | E | E | E | E | E |
| | Safe class | - | IP20 | IP20 | IPX0 | IP20 | IPX4 | IP20 | IP20 | IP20 |

## Table 6 — Compatibility

| INDOOR UNIT | | HEAT PUMP OUTDOOR UNIT | | | | | | | |
|---|---|---|---|---|---|---|---|---|---|
| | | 37MHRAQ09AA1 | 37MHRAQ12AA1 | 37MHRAQ09AA3 | 37MHRAQ12AA3 | 37MHRAQ18AA3 | 37MHRAQ24AA3 | 37MHRAQ30AA3 | 37MHRAQ36AA3 |
| High Wall | **45MHHAQ09XC1** | • | | | | | | | |
| | **45MHHAQ12XC1** | | • | | | | | | |
| | **45MHHAQ09XC3** | | | • | | | | | |
| | **45MHHAQ12XC3** | | | | • | | | | |
| | **45MHHAQ18XC3** | | | | | • | | | |
| | **45MHHAQ24XC3** | | | | | | • | | |
| | **45MHHAQ30XC3** | | | | | | | • | |
| | **45MHHAQ36XC3** | | | | | | | | • |

Manufacturer reserves the right to change, at any time, specifications and designs without notice and without obligations.

# SPECIFICATIONS (COOLING ONLY)

## Table 7 — Fan and Motor Specifications

| INDOOR UNIT MODEL | | | 45MHHAC12XC1 | 45MHHAC09XC3 | 45MHHAC12XC3 | 45MHHAC18XC3 | 45MHHAC24XC3 |
|---|---|---|---|---|---|---|---|
| POWER SUPPLY | | V;Ph;Hz | 115V;1Ph;60HZ | 208/230V;1Ph;60HZ | 208/230V;1Ph;60HZ | 208/230V;1Ph;60HZ | 208/230V;1Ph;60HZ |
| INDOOR FAN SPECIFICATIONS | Material | - | Acrylontrile Styrene +30%G | Acrylontrile Styrene +30%G | Acrylontrile Styrene +30%G | Acrylontrile Styrene +30%G | Acrylontrile Styrene +30%G |
| | Type | - | GL-96*608-IN | GL-94*530-N | GL-96*608-IN | GL-98*758-I | GL-108*818 |
| | Diameter | inch | 3.9 | 3.7 | 3.9 | 3.9 | 4.3 |
| | | mm | 98 | 94 | 98 | 98 | 108 |
| | Height | inch | 23.9 | 20.9 | 23.9 | 29.8 | 32.2 |
| | | mm | 608 | 530 | 608 | 758 | 818 |
| INDOOR MOTOR SPECIFICATIONS | Model | - | ZKFP-20-8-113 | ZKFP-13-8-4 | ZKFP-13-8-4 | ZKFP-30-8-3-10 | ZKFP-58-8-1-10 |
| | Type | - | DC | DC | DC | DC | DC |
| | Input | W | 32 | 15 | 21.7 | 31 | 82 |
| | Max. input | W | 52.3 | 42.0 | 42.0 | 70.0 | 102 |
| | Output | W | 24 | 11.3 | 16.3 | 23.3 | 61.5 |
| | FLA | A | 0.39 | 0.45 | 0.48 | 0.5 | 0.53 |
| | Rated HP | HP | 0.03 | 0.02 | 0.02 | 0.03 | 0.08 |
| | Range of current | Amps | 0.1~0.373 | 0.11~0.42 | 0.11~0.42 | 0.14~0.58 | 0.27~0.96 |
| | Rated current | Amps | 0.24 | 0.18 | 0.24 | 0.28 | 0.78 |
| | Speed | rev/min | 1200/1040/880 | 1050/810/690 | 1200/1040/880 | 1200/1000/800 | 1200/960/720 |
| | Rated RPM | rev/min | 1200 | 1050 | 1200 | 1200 | 1200 |
| | Insulation class | - | E | B | B | E | E |
| | Safe class | - | IP20 | IPX0 | IPX0 | IPX4 | IP20 |

## Table 8 — Compatibility

| INDOOR UNIT | | OUTDOOR UNIT (COOLING ONLY) | | | | |
|---|---|---|---|---|---|---|
| | | 37MHRAC12AA1 | 37MHRAC09AA3 | 37MHRAC12AA3 | 37MHRAC18AA3 | 37MHRAC24AA3 |
| High Wall | 45MHHAC12XC1 | • | | | | |
| | 45MHHAC09XC3 | | • | | | |
| | 45MHHAC12XC3 | | | • | | |
| | 45MHHAC18XC3 | | | | • | |
| | 45MHHAC24XC3 | | | | | • |

Manufacturer reserves the right to change, at any time, specifications and designs without notice and without obligations.

# APPLICATION DATA

## Unit Selections

Select equipment that either matches or is supports slightly more than the anticipated peak load. This provides better humidity control, fewer unit cycles, and less part-load operation.
For units used in spaces with high sensible loads, base equipment selection on unit sensible load, not on total anticipated load. Adjust for anticipated room wet bulb temperature to avoid undersizing the equipment.

## Unit Mounting (Indoor)

Refer to the unit's installation instructions for further details.
**Unit leveling** - For reliable operation, units should be level in all planes.
**Clearance** - Provide adequate clearance for airflow. see Fig. 4 — on page 7.
**Unit location** - Select a location which provides the best air circulation for the room. These units should be positioned as high as possible on the wall for the best air circulation. The unit return and discharge should not be obstructed by furniture, curtains, or anything which may cause unit short cycling or air recirculation.
Place the unit in the middle of the selected wall (if possible). Use an outside wall, if available, to make piping easier, and place the unit so it faces the normal location of room occupants.

## Unit Mounting (Outdoor)

Refer to the unit's installation instructions for further details.
Do not install the indoor or outdoor units in a location with special environmental conditions. For those applications, contact your Carrier representative.

## Mounting Template

Refer to the unit's installation instructions for further details. The fan coil units are furnished with a mounting template to mark the location of the wiring, and the refrigeration line hole locations.

## Support

Adequate support must be provided to support the weight of all the fan coils. Refer to Table 3 (HP) and Table 4 (Cooling Only) for fan coil weights, and the Installation Manual for the mounting bracket locations.

## System Operating Conditions

| OPERATING RANGE MIN / MAX °F (°C) | | |
|---|---|---|
| | COOLING | HEATING |
| INDOOR DB | 60 / 90 (16 / 32) | 32 / 86 (0 / 30) |

**NOTE: Reference the product installation instructions for more information.**

## Drain Connections

Install drains that meet the local sanitation codes. If adequate gravity drainage cannot be provided, the unit should be equipped with an accessory condensate pump. See the physical dimension tables for the drain sizes.

**NOTE: High wall fan coil units have internal condensate traps. A trap is not required.**

Drain connections may be routed through alternate locations on most fan coils (See Fig. 5 — Piping Location)

.

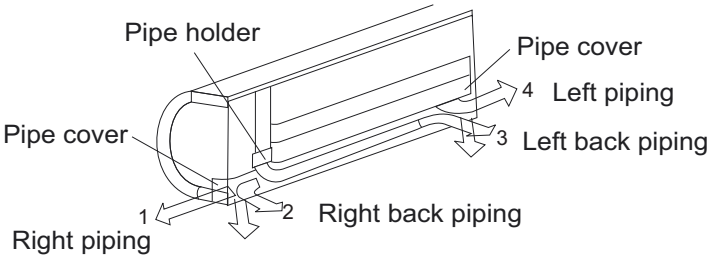


**Fig. 5 —Piping Location**

# WIRING

All wires must be sized per NEC (National Electrical Code) or CEC (Canadian Electrical Code) and local codes. Use Electrical Data table MCA (minimum circuit amps) and MOP (maximum over current protection) to correctly size the wires and the disconnect fuse or breakers respectively.
Per the caution note, only stranded copper conductors with a 600 volt insulation rating wire must be used.

**Recommended Connection Method for Power and Communication Wiring:**

The main power is supplied to the outdoor unit. The field supplied 14/3 stranded wire with ground with a 600 volt insulation rating, power/communication wiring from the outdoor unit to indoor unit consists of four (4) wires and provides the power for the indoor unit. Two wires are line voltage AC power, one is communication wiring (S) and the other is a ground wire. Wiring between indoor and outdoor unit is polarity sensitive. The use of BX wire is NOT recommended.

If installed in a high Electromagnetic field (EMF) area and communication issues exists, a 14/2 stranded shielded wire can be used to replace L2/N and (S) between outdoor unit and indoor unit landing the shield onto ground in the outdoor unit only.

**⚠ CAUTION**

**EQUIPMENT DAMAGE HAZARD**

Failure to follow this caution may result in equipment damage or improper operation.

Wires should be sized based on NEC and local codes.

**⚠ CAUTION**

**EQUIPMENT DAMAGE HAZARD**

Failure to follow this caution may result in equipment damage or improper operation.

Be sure to comply with local codes while running wire from the indoor unit to the outdoor unit.

Every wire must be connected firmly. Loose wiring may cause the terminal to overheat or result in unit malfunction. A fire hazard may also exist. Ensure all wiring is tightly connected.

No wire should touch the refrigerant tubing, compressor or any moving parts.

Disconnecting means must be provided and shall be located within sight and readily accessible from the air conditioner.

# CONTROL SYSTEM

The indoor unit is equipped with a microprocessor control to perform two functions:

1. Provide safety for the system
2. Control the system and provide optimum levels of comfort and efficiency.

The main microprocessor is located on the control board of the fan coil unit (outdoor units also have a microprocessor) with thermistors located in the fan coil air inlet and on the indoor coil. Heat pump units have a thermistor on the outdoor coil. These thermistors monitor the system operation to maintain the unit within acceptable parameters and controls the operating mode.

## REMOTE CONTROLLERS

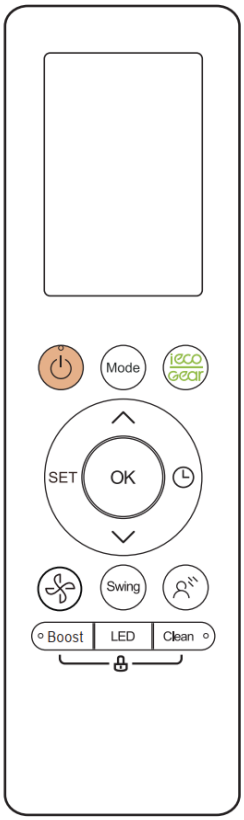


**Fig. 6 — Wireless Remote**

To attach the mounting bracket:

1. Use the two screws supplied with the wireless remote control to attach the mounting bracket to the wall in a location selected by the customer and within operating range.
2. Install the batteries in the remote control.
3. Place the remote control into the remote control mounting bracket.

**NOTE: For remote control operation, refer to the remote control's owners manual.**

# OPTIONAL WIRED WALL-MOUNTED REMOTE CONTROL INSTALLATION

The optional wired remote controller comes with the following items:

- A set of installation instructions and owner's manuals
- 3 M4X20 Screws to mount on the wall
- 4 wall plugs to mount on the wall
- 2 M4X25 to mount on switch box
- 2 plastic screw bars to fix on switch box
- 1 set of batteries
- 1 set of connecting wires to connect to indoor unit’s main board

**Fig. 7 — Wired Controller (KSACN1201AAA AND KSACN1401AAA)**

For wired controller set up and installation instructions, consult the wired controller installation manual.

## Mini 24 Volt Interface (Optional)

**P/N KSAIC0601230 for 208-230V models.**

Allows the Ductless System to be controlled using a third party thermostat.

## Wi-Fi Kit for Smart Phone Control (Optional)

**P/N KSAIF0701AAA**

Allows the Ductless System to be controlled using a connected smart phone application

# AIRFLOW DATA (Heat Pump)

## AIRFLOW DATA

| SYSTEM SIZE | | 9K (115V) | 12K (115V) | 9K (208/230V) | 12K (208/230V) | 18K (208/230V) | 24K (208/230V) | 30K (208/230V) | 36K (208/230V) |
|---|---|---|---|---|---|---|---|---|---|
| Indoor (CFM) | High | 235.4 | 294.3 | 247.2 | 288.4 | 400.2 | 547.4 | 706.3 | 653.3 |
| | Medium | 170.7 | 235.4 | 176.6 | 194.2 | 329.6 | 400.2 | 582.7 | 477.3 |
| | Low | 135.4 | 176.6 | 141.3 | 153 | 270.7 | 329.6 | 382.6 | 329.6 |

## AIR THROW DATA

| HIGH WALL UNIT CAPACITY | MAX. APPROXIMATE AIR THROW FT. (M) |
|---|---|
| 9K (115) | 21.33 (6.5) |
| 12K (115) | 21.33 (6.5) |
| 9K (230) | 21.33 (6.5) |
| 12K (230) | 21.33 (6.5) |
| 18K (230) | 25.1 (7.65) |
| 24K (230) | 30.41 (9.27) |
| 30K (230) | 30.41 (9.27) |
| 36K (230) | 30.41 (9.27) |

## AIR MOISTURE

| SIZE | | 9K | 12K | 9K | 12K | 18K | 24K | 30K | 36K |
|---|---|---|---|---|---|---|---|---|---|
| Voltage, Phase, Cycle | V/Ph/Hz | 115-1-60 | 115-1-60 | 208/230-1-60 | 208/230-1-60 | 208/230-1-60 | 208/230-1-60 | 208/230-1-60 | 208/230-1-60 |
| Dehumidifying Volume | Liter/hr | 1.0 | 1.3 | 0.9 | 1.4 | 2.5 | 3.0 | 3.6 | 5.1 |

## SOUND DATA

| MODEL NUMBER | | 45MHHAQ09XC1 | 45MHHAQ12XC1 | 45MHHAQ09XC3 | 45MHHAQ12XC3 | 45MHHAQ18XC3 | 45MHHAQ24XC3 | 45MHHAQ30XC3 | 45MHHAQ36XC3 |
|---|---|---|---|---|---|---|---|---|---|
| POWER SUPPLY | V-Ph-Hz | 115V -1Ph-60HZ | 115V -1Ph-60HZ | 208/230V -1Ph-60HZ | 208/230V -1Ph-60HZ | 208/230V -1Ph-60HZ | 208/230V -1Ph-60HZ | 208/230V -1Ph-60HZ | 208/230V -1Ph-60HZ |
| INDOOR SOUND PRESSURE LEVEL (HI/MED/LO /SILENT) | dB(A) | 37.0<br>33.0<br>23.0<br>18.5 | 41.0<br>37.0<br>27.5<br>18.5 | 38.5<br>33.0<br>24.0<br>19.5 | 41<br>35<br>24<br>18.5 | 45<br>38<br>23<br>19 | 46<br>41.0<br>28<br>22 | 52<br>45<br>36<br>22 | 51.0<br>45.0<br>33.5<br>27.5 |

**Manufacturer reserves the right to change, at any time, specifications and designs without notice and without obligations.**

# AIRFLOW DATA (Cooling Only)

## AIRFLOW DATA

| SYSTEM SIZE | | 12K (115 V) | 9K (208/230 V) | 12K (208/230 V) | 18K (208/230 V) | 24K (208/230 V) |
|---|---|---|---|---|---|---|
| Indoor (CFM) | High | 329.6 | 247.2 | 329.64 | 471.0 | 588.6 |
| | Medium | 253.1 | 176.6 | 232.5 | 353.1 | 470.9 |
| | Low | 211.9 | 141.3 | 194.2 | 306.1 | 400.2 |

## AIR THROW DATA

| HIGH WALL UNIT CAPACITY | MAX. APPROXIMATE AIR THROW FT. (M) |
|---|---|
| 12K (115) | 21.33 (6.5) |
| 9K (230) | 21.33 (6.5) |
| 12K (230) | 21.33 (6.5) |
| 18K (230) | 25.1 (7.65) |
| 24K (230) | 30.41 (9.27) |

## AIR MOISTURE

| SIZE | | 12K | 9K | 12K | 18K | 24K |
|---|---|---|---|---|---|---|
| Voltage, Phase, Cycle | V/Ph/Hz | 115V;1Ph;60 | 208/230-1-60 | 208/230-1-60 | 208/230-1-60 | 208/230-1-60 |
| Dehumidifying Volume | Liter/hr | 1.10 | 0.94 | 1.20 | 2.10 | 2.30 |

## SOUND DATA

| MODEL NUMBER | | 45MHHAC12XC1 | 45MHHAC09XC3 | 45MHHAC12XC3 | 45MHHAC18XC3 | 45MHHAC24XC3 |
|---|---|---|---|---|---|---|
| POWER SUPPLY | V-PH-HZ | 115V;1Ph;60HZ | 2208/230V-1Ph-60HZ | 208/230V-1Ph-60HZ | 208/230V-1Ph-60HZ | 208/230V-1Ph-60HZ |
| INDOOR SOUND PRESSURE LEVEL (HI/MED/LO/SILENT) | dB(A) | 40.5/36/20.5/19 | 35.5/32/20/19 | 41/36/20/19 | 44/37.0/21.0/19 | 46.5/40/26.5/20 |

**Manufacturer reserves the right to change, at any time, specifications and designs without notice and without obligations.**

# WIRING DIAGRAM

## WIRING DIAGRAM - Heat Pump

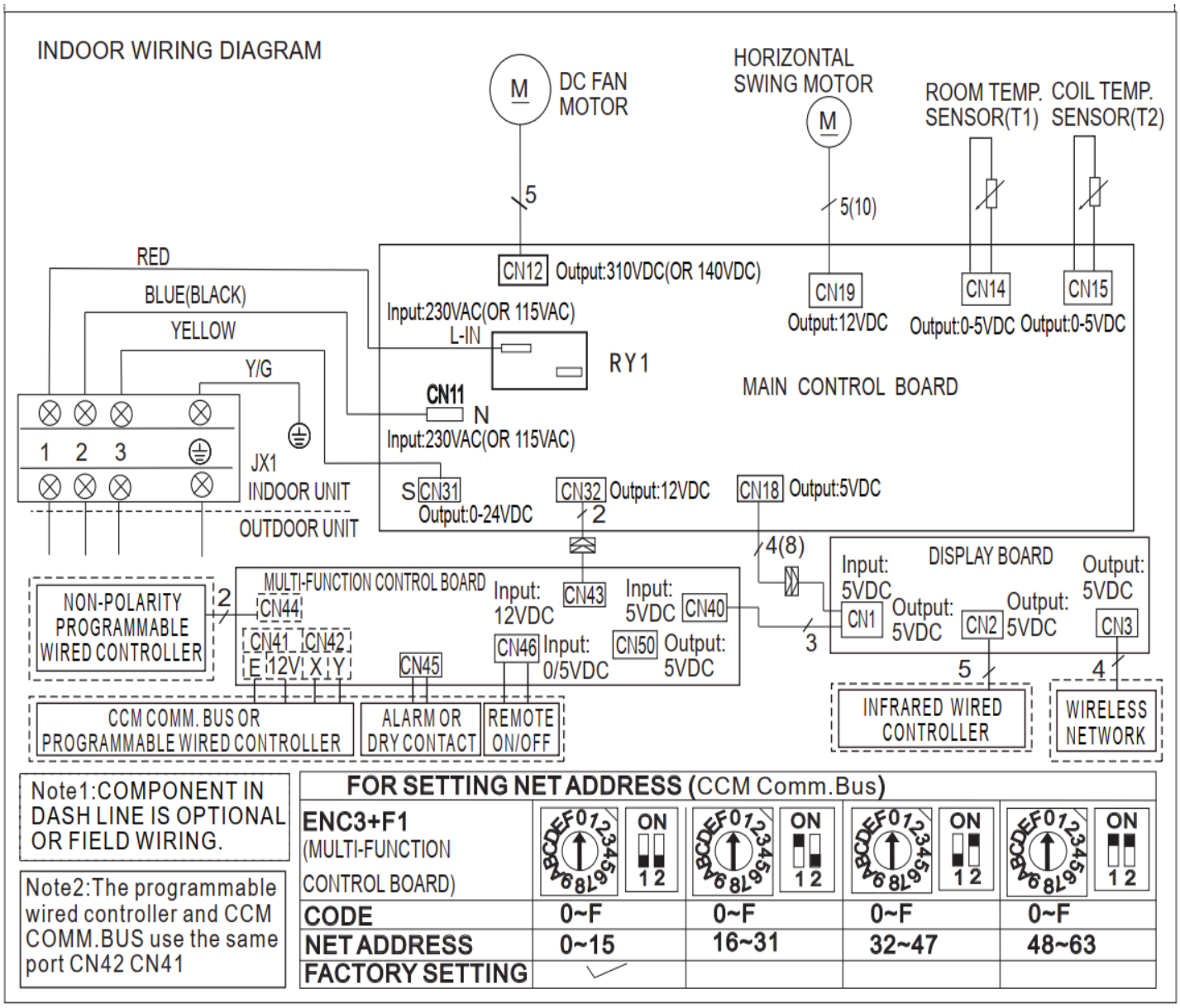


**Fig. 8 — Sizes 09K, 12K, 18K (Heat Pump)**

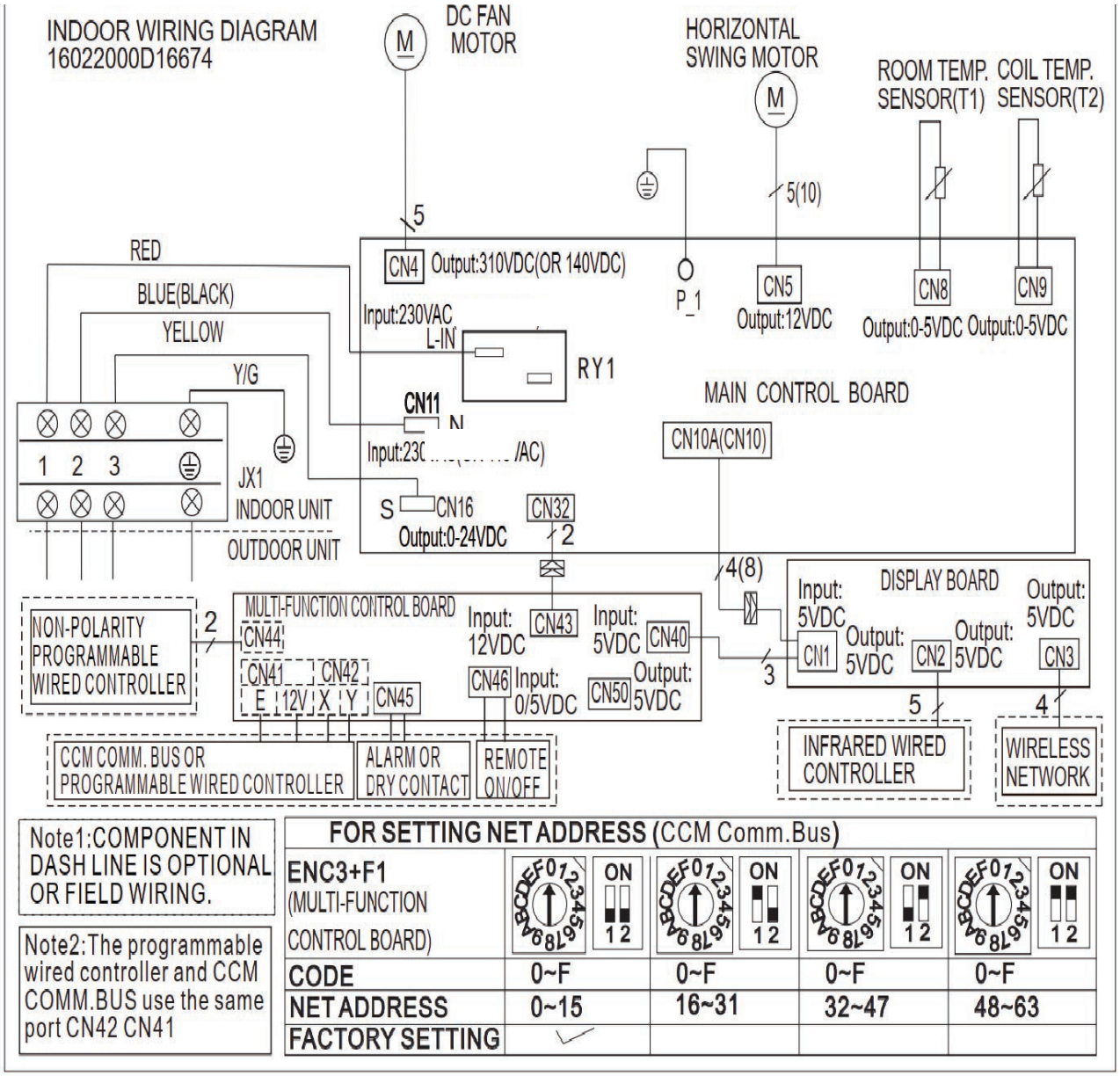


**Fig. 9 — Sizes 24K, 30K, 36K (Heat Pump)**

# WIRING DIAGRAMS - Cooling Only

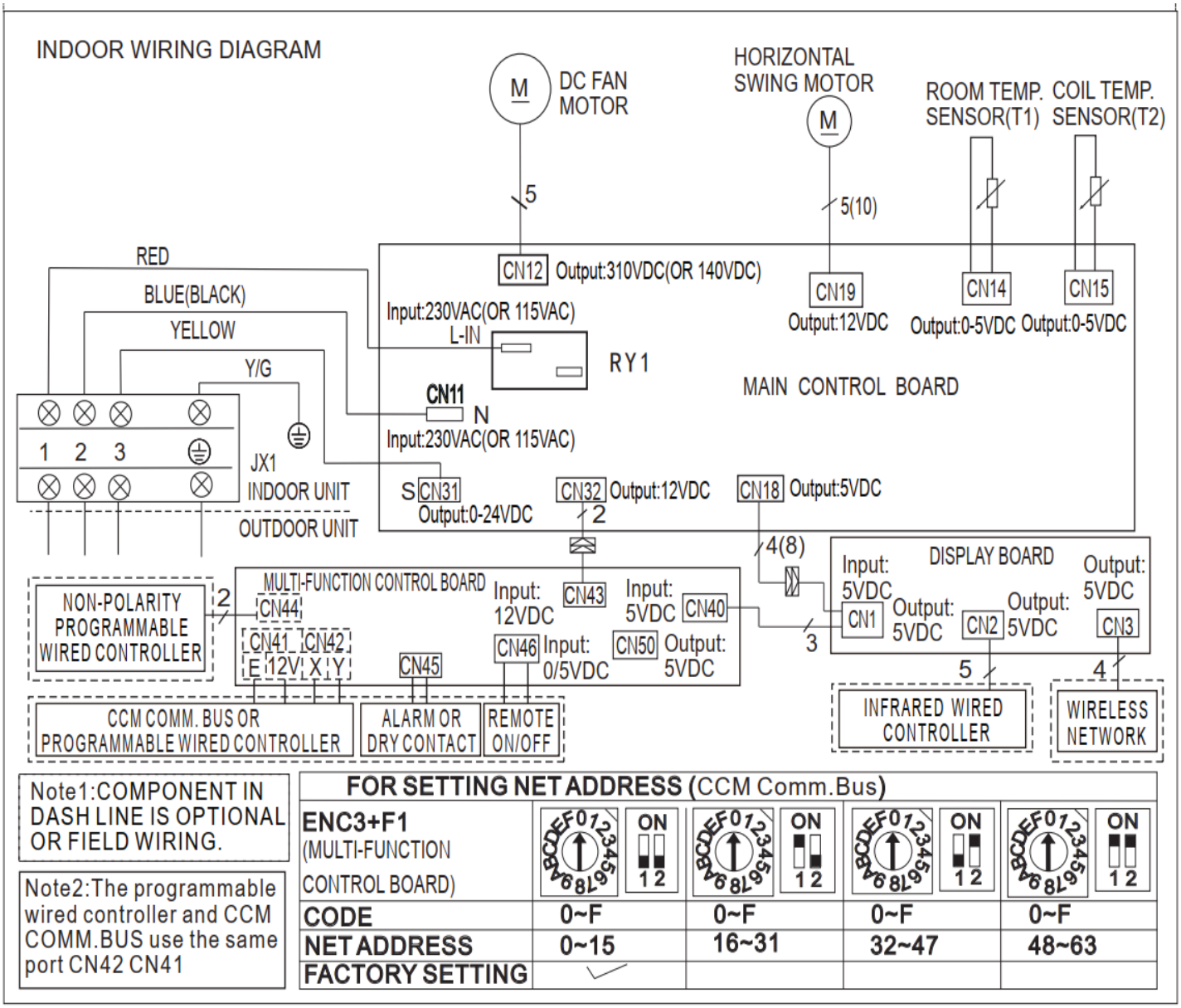


**Fig. 10 — Wiring Diagram Sizes 9K, 12K and 18K (Cooling Only)**

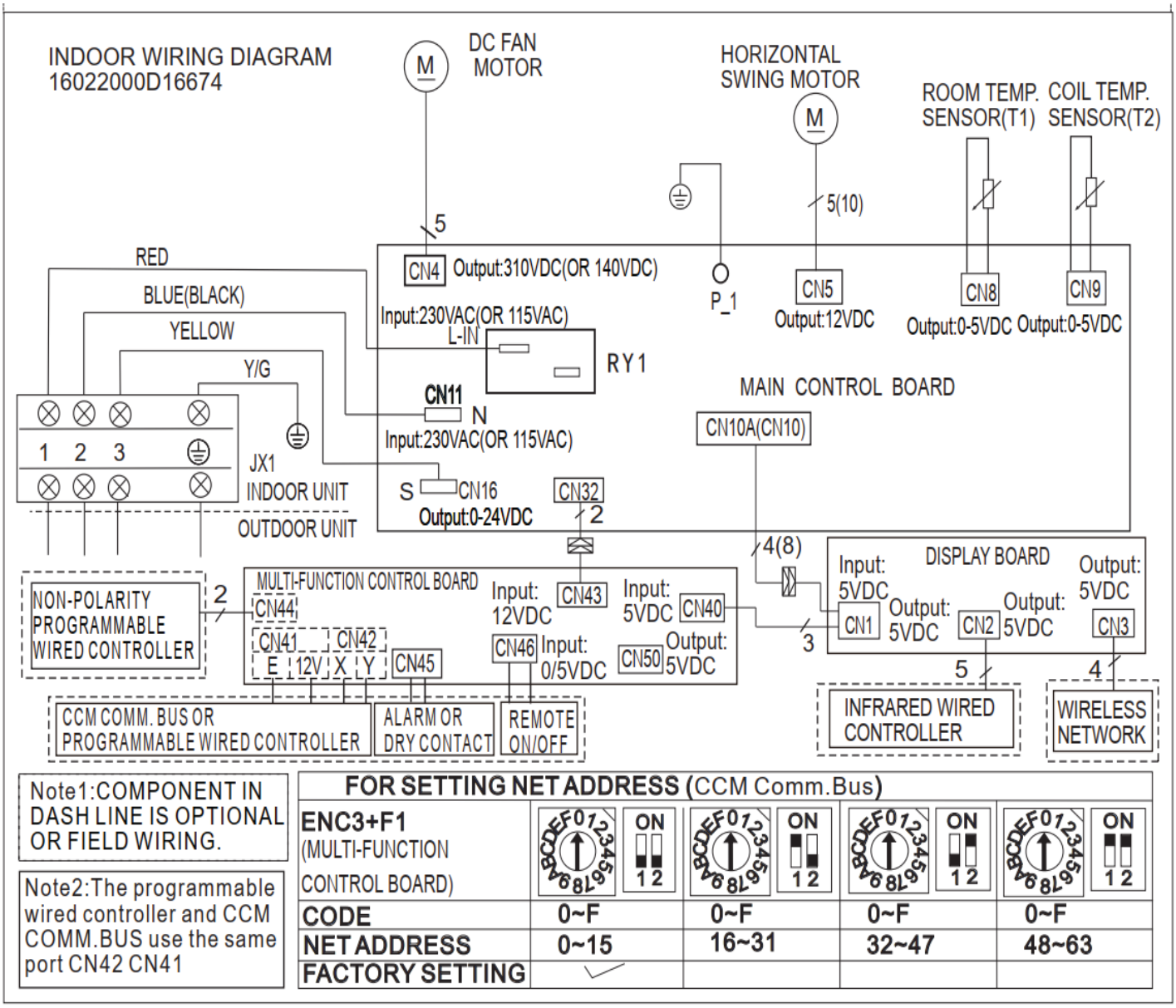


**Fig. 11 — Wiring Diagram Size 24K (Cooling Only)**

# GUIDE SPECIFICATIONS

## INDOOR WALL-MOUNTED DUCTLESS UNITS

Size Range: 3/4 to 3 Ton Nominal Cooling and Heating Capacity Model Number: 45MHHA

## Part 1 - GENERAL

### 1.01 System Description

Indoor, wall−mounted, direct−expansion fan coils are matched with the heat pump outdoor unit.

### 1.02 Agency Listings

Unit are rated per AHRI Standards 210/240 and listed in the AHRI directory as a matched system.

### 1.03 Delivery, Storage, And Handling

Units are stored and handled per the unit manufacturer's recommendations.

### 1.04 Warranty (For Inclusion By Specifying Engineer)

## Part 2 - PRODUCTS

### 2.01 Equipment

**A. General: Indoor, direct-expansion, wall-mounted fan coil**

Unit is complete with a cooling/heating coil, fan, fan motor, piping connectors, electrical controls, microprocessor control system, and integral temperature sensing. Unit is furnished with an integral wall mounting bracket and mounting hardware.

B. **Unit Cabinet:**

Cabinet discharge and inlet grilles are attractively styled, high-impact polystyrene. Cabinet is fully insulated for improved thermal and acoustic performance.

C. **Fans**:

1. Fan is the tangential direct-drive blower type with air intake at the top of the unit and discharge at the bottom front. An automatic, motor-driven vertical air sweep is provided as standard equipment.
2. The air sweep operation is user selectable. The vertical sweep may be adjusted (using the remote control). The horizontal air direction may be set manually.

D. **Coil**:

The coil is a copper tube with aluminum fins and galvanized steel tube sheets. The fins are bonded to the tubes by mechanical expansion and anti-corrosive fin coating. A drip pan under the coil has a drain connection for the hose attachment to remove condensate. The condensate pan has an internal trap.

E. **Motors**:

Motors are open drip−proof, with a permanently lubricated ball bearing. The fan motor is 4−speed.

F. **Controls**:

Controls consist of a microprocessor-based control system which controls space temperature, determine optimum fan speed, and run self diagnostics. The temperature control range is from 60°F to 86°F (16°C to 30°C) in increments of 1°F or 1°C, and have 46°F Heating Mode (Heating Setback). The wireless remote controller has the ability to act as the temperature sensing location for room comfort.

**The unit has the following functions as a minimum:**

1. An automatic restart after a power failure at the same operating conditions as at the failure.
2. A timer function to provide a minimum 24−hour timer cycle for system Auto Start/Stop.
3. Temperature−sensing controls sense return air temperature.
4. Indoor coil freeze protection.
5. Wireless infrared remote control to enter set points and operating conditions.
6. Automatic air sweep control to provide on or off activation of air sweep louvers.
7. Dehumidification mode provides increased latent removal capability by modulating the system operation and the set point temperature.
8. Fan−only operation to provide room air circulation when no cooling is required.
9. Diagnostics provide continuous checks of unit operation and warn of possible malfunctions. Error messages appear on the unit.
10. Fan speed control is user−selectable: turbo, high, medium, low, or microprocessor controlled automatic operation during all operating modes.
11. Automatic heating−to−cooling changeover in the heat pump mode. Control includes deadband to prevent rapid mode cycling between heating and cooling.
12. Indoor coil high temperature protection detects excessive indoor discharge temperature when the unit is in the heat pump mode.

**G. Filters:**

Unit have a filter track with factory-supplied cleanable filters.

**H. Electrical Requirements:**

Indoor fan motor to operate on 115V on HP sizes 9 & 12: Cooling Only size 12, and on 208-230V on HP sizes 9-36: Cooling Only sizes 9-24, as specified. Power is supplied by the outdoor unit.

**I. Operating Characteristics:**

The system has a minimum SEER2 (Seasonal Energy Efficiency Ratio) and HSPF at AHRI conditions, as listed on the specifications table.

**J. Refrigerant Lines:**

All units have refrigerant lines that can be oriented to connect from the left, right or back of unit. Both refrigerant lines need to be insulated.

**K. Special Features:**

**Wi-Fi Compatible**
**BACNet Compatible**

© 2026 Carrier. All rights reserved.

**Manufacturer reserves the right to change, at any time, specifications and designs without notice and without obligations.**