PG96VAT
TWO-STAGE, 4-WAY MULTIPOISE
VARIABLE-SPEED
CONDENSING GAS FURNACE

Product Data

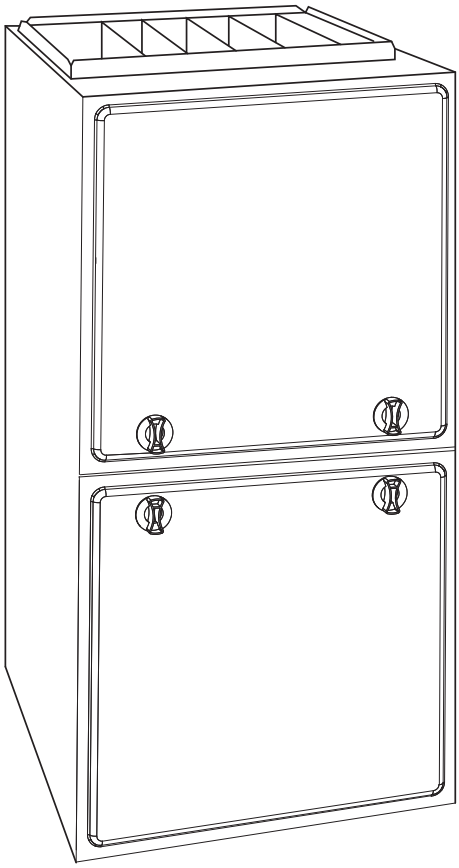

A11300

The two-stage gas valve is at the heart of the comfort provided by this furnace, along with the variable-speed ECM blower motor, and two-speed inducer motor. With an Annual Fuel Utilization Efficiency (AFUE) up to 96.0%, the two-stage gas furnace provides exceptional savings as well when compared to standard gas furnaces. This furnace also features 4-way multipoise installation flexibility, and is available in six model sizes. The PG96VAT can be vented for direct vent/two-pipe, ventilated combustion air, or single-pipe applications. All units meet California Air Quality Management District emission requirements. All sizes are design certified in Canada.

STANDARD FEATURES

- All sizes meet ENERGY STAR® Version 4.0 criteria for gas furnaces: 95+AFUE; AMACF electrical rating; 2% or less cabinet airflow leakage.
- Ideal height 35” (889 mm) cabinet: short enough for taller coils, but still allows enough room for service.
- Silicon Nitride Hot Surface Igniter.
- 4-way multipoise design for upflow, downflow or horizontal installations, with unique vent elbow and optional through-the-cabinet downflow venting capability.
- Full-featured variable-speed blower motor, two-speed inducer motor, and two-stage gas valve.
- Self-diagnostics.
- Adjustable blower speed for cooling, continuous fan, and dehumidification.
- Aluminized-steel primary heat exchanger.
- Stainless-steel condensing secondary heat exchanger.
- Propane convertible (See Accessory list).
- Factory-configured ready for upflow applications.
- Fully-insulated casing including blower section.
- Convenient Air Purifier and Humidifier electrical connections.
- Direct-vent/sealed combustion, single-pipe venting or ventilated combustion air.
- Installation flexibility: sidewall or vertical vent.
- Certified to leak 2% or less of nominal air conditioning CFM delivered when pressurized to 1-in. water column with all present air inlets, air outlets, and condensate drain port(s) sealed.

Use of the AHRI Certified TM Mark indicates a manufacturer’s participation in the program. For verification of certification for individual products, go to www.ahridirectory.org.

Always Ask For FACTORY AUTHORIZED PARTS

SAP ORDERING NO.	CASING DIMENSIONS (IN.)			RATED HEATING OUTPUT† (BTUH)			HEATING			COOLING CFM @ 0.5 ESP	MOTOR HP (VARIABLE SPEED)
	H	D	W	High	Low	AFUE	CFM‡ (Low Heating)	CFM (High Heating)	Rated High Heating ESP		
PG96VAT30040AB	35	29.5	14.2	39,000	25,000	96.0%	660	815	0.10	440 - 905	1/2
PG96VAT42060BB	35	29.5	17.5	58,000	38,000	96.0%	860	1135	0.12	435 - 1475	3/4
PG96VAT48080BB	35	29.5	17.5	78,000	50,000	96.0%	1160	1505	0.15	555 - 1610	3/4
PG96VAT60080CB	35	29.5	21.0	78,000	51,000	96.0%	1200	1555	0.15	440 - 2005	1
PG96VAT60100CB	35	29.5	21.0	97,000	63,000	96.0%	1435	1865	0.20	405 - 2005	1
PG96VAT66120DB	35	29.5	24.5	117,000	76,000	96.0%	1675	2375	0.20	480 - 2115	1

†Capacity in accordance with DOE test procedures. Ratings are position dependent. See rating plate.
‡Minimum heat CFM when low–heat rise adjustment switch (SW 1–3) and comfort/efficiency adjustment switch (SW1–4) on control center are OFF.
ESP – External Static Pressure

Dual Fuel System Compatibility — This system can provide more control over your monthly energy bills by automatically selecting the most economical method of heating. Our system automatically switches between the gas furnace and the electric heat pump as outside temperatures change to maintain greater efficiency and comfort than with any traditional single-source heating system. The heat pump also delivers high-efficiency cooling in the summer.

Robust Igniter — Payne's unique SiN igniter is not only physically robust but it is also electrically robust. It is capable of running at line voltage and does not require complex voltage regulators as do other brands. This unique feature further enhances the gas furnace reliability and continues Payne's tradition of technology leadership and innovation in providing a reliable and durable product.

Reliable Heat Exchanger Design — The aluminized steel, clam shell primary heat exchanger was re-engineered to achieve greater efficiency out of a smaller size. The first two passes of the heat exchanger are based on the current 80% product, a design with more than ten years of field-proven performance and success. These innovations, paired with the continuation of a crimped, no-weld seam create an efficient, robust design for this essential component.

The condensing heat exchanger, a stainless steel fin and tube design, is positioned in the furnace to extract additional heat. Stainless steel coupling box componentry between heat exchangers has exceptional corrosion resistance in both natural gas and propane applications.

4-Way Multipoise Design — One model for all applications – there is no need to stock special downflow or horizontal models when one unit will do it all. The new heat exchanger design allows these units to achieve the certified AFUE in all positions.

Direct or Single-pipe Venting, or Optional Ventilated Combustion Air — This furnace can be installed as a 2-pipe (Direct Vent) furnace, in an optional ventilated combustion air application, or in single-pipe, non-direct vent applications. This provides added flexibility to meet diverse installation needs.

Sealed Combustion System — This furnace brings in combustion air from outside the furnace when installed as a direct vent or ventilated combustion air venting system, which results in especially quiet operation. By sealing the entire combustion vestibule, the entire furnace can be made quieter, not just the burners.

Monoport Burners — The burners are specially designed and finely tuned for smooth, quiet combustion and economical operation.

Bottom Closure — Factory-installed for side return; easily removable for bottom return. The multi-use bottom closure can also serve for roll-out protection in horizontal applications, and act as the bottom closure for the optional return air base accessory.

Blower Access Panel Switch — Automatically shuts off 115-v power to furnace whenever blower access panel is opened.

Quality Registration — Our furnaces are engineered and manufactured under an ISO 9001 registered quality system.

Certifications — This furnace is CSA (AGA and CGA) design certified for use with natural and propane gases. The furnace is factory-shipped for use with natural gas. A CSA listed gas conversion kit is required to convert furnace for use with propane gas. The efficiency is AHRI efficiency rating certified. This furnace meets California Air Quality Management District emission requirements.

SPECIFICATIONS

Heating Capacity and Efficiency			30040	42060	48080	60080	60100	66120
Input	High Heat	(BTUH)	40,000	60,000	80,000	80,000	100,000	120,000
	Low Heat	(BTUH)	26,000	39,000	52,000	52,000	65,000	78,000
Output	High Heat	(BTUH)	39,000	58,000	78,000	78,000	97,000	117,000
	Low Heat	(BTUH)	25,000	38,000	50,000	51,000	63,000	76,000
Certified Temperature Rise Range ºF (ºC)		High Heat	40 - 70 (22 - 39)	40 - 70 (22 - 39)	40 - 70 (22 - 39)	40 - 70 (22 - 39)	40 - 70 (22 - 39)	40 - 70 (22 - 39)
		Low Heat	30 - 60 (17 - 33)	30 - 60 (17 - 33)	30 - 60 (17 - 33)	30 - 60 (17 - 33)	30 - 60 (17 - 33)	30 - 60 (17 - 33)

Airflow Capacity and Blower Data		30040	42060	48080	60080	60100	66120
Rated External Static Pressure (in. W.C.)	Heating	0.10	0.12	0.15	0.15	0.20	0.20
	Cooling	0.5	0.5	0.5	0.5	0.5	0.5
Airflow Delivery @ Rated ESP (CFM)	High Heat	815	1135	1505	1555	1865	2375
	Low Heat	660	860	1160	1200	1435	1675
	Cooling	905	1475	1610	2005	2005	2115
Cooling Capacity (tons)	400 CFM/ton	2	3.5	4	5	5	5
	350 CFM/ton	2.5	4	4.5	5.5	5.5	6
Direct-Drive Motor Type		Electronically Commutated Motor (ECM)					
Direct-Drive Motor HP		1/2	3/4	3/4	1	1	1
Motor Full Load Amps		6.8	8.4	8.4	10.9	10.9	10.9
RPM Range		600 - 1200					
Speed Selections		Variable (PWM)					
Blower Wheel Dia x Width	in.	11 x 7	11 x 8	11 x 8	11 x 10	11 x 10	11 x 11
Air Filtration System		Field Supplied					
Filter Used for Certified Watt Data*		KGAWF**06UFR					

Electrical Data		30040	42060	48080	60080	60100	66120
Input Voltage	Volts-Hertz-Phase	115-60-1					
Operating Voltage Range	Min-Max	104 - 127					
Maximum Input Amps	Amps	7.5	9.2	9.2	11.7	11.8	11.8
Unit Ampacity	Amps	10.3	12.4	12.4	15.5	15.6	15.6
Minimum Wire Size	AWG	14	14	14	12	12	12
Maximum Wire Length @ Minimum Wire Size	Feet	36	29	29	37	36	36
	(M)	(11.0)	(8.8)	(8.8)	(11.3)	(11.0)	(11.0)
Maximum Fuse/Ckt Bkr (Time-Delay Type Recommended)	Amps	15	15	15	20	20	20
Transformer Capacity (24vac output)		40 VA					
External Control Power Available	Heating	24.3 VA					
	Cooling	34.6 VA					

Controls		30040	42060	48080	60080	60100	66120
Gas Connection Size		1/2" - NPT					
Burners (Monoport)		2	3	4	4	5	6
Gas Valve (Redundant)	Manufacturer	White Rogers					
Minimum Inlet Gas pressure (in. W.C.)		4.5					
Maximum Inlet Gas pressure (in. W.C.)		13.6					
Manufactured (Mobile) Home Kit		*not approved for MH use*					
Ignition Device		Silicon Nitride					
Limit Control		165	180	170	200	180	160
Heating Blower Control (Heating Off-Delay)		Adjustable: 90, 120, 150, 180 seconds					
Cooling Blower Control (Time Delay Relay)		90 seconds					
Communication System		Non-communicating					
Thermostat Connections		R, W/W1, W2 Y/Y2, Y1, G, Com 24V, DHUM					
Accessory Connections		EAC (115vac); HUM (24vac); 1-stg AC (via Y/Y2)					

* See Accessory List for part numbers available.

MODEL NUMBER NOMENCLATURE

Example of a Model Number

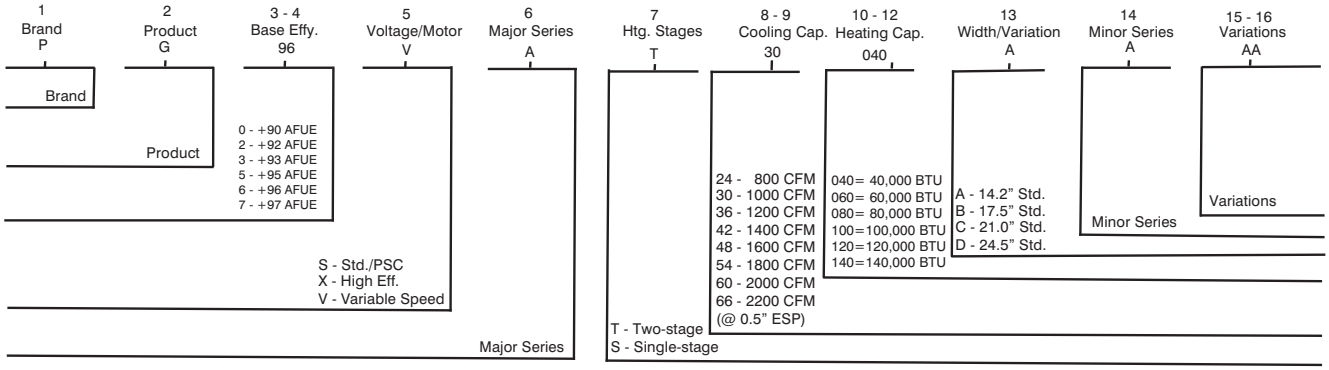

Not all familes have these models.

A12375

PG96VAT

FURNACE COMPONENTS

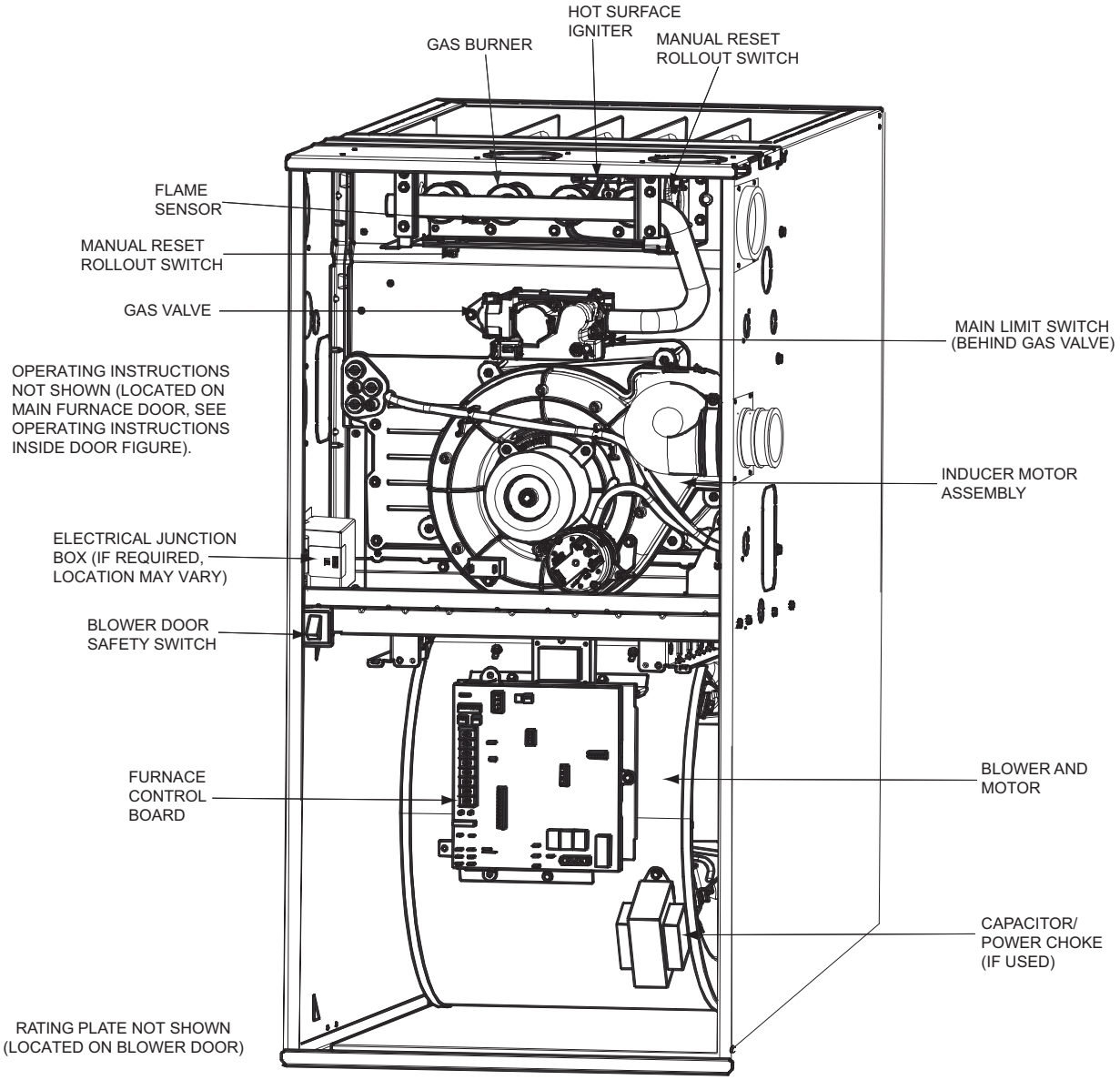

REPRESENTATIVE DRAWING ONLY, SOME MODELS MAY VARY IN APPEARANCE.

A11485

ACCESSORIES

DESCRIPTION	PART NUMBER	30040	42060	48080	60080	60100	66120
Venting Accessories							
Vent Kit - Through the Cabinet	KGADC0101BVC	●	●	●	●	●	●
Vent Terminal - Concentric - 2” (51 mm)	KGAVT0701CVT	See Venting Tables					
Vent Terminal - Concentric - 3” (76 mm)	KGAVT0801CVT						
Vent Terminal Bracket - 2” (51 mm)	KGAVT0101BRA						
Vent Terminal Bracket - 3” (76 mm)	KGAVT0201BRA						
Vent Kit – Rubber Coupling	KGAAC0101RVC	See Venting Tables					
Condensate Drainage Accessories							
Freeze Protect Kit - Trap Heater	KGAHT0201CFP	●	●	●	●	●	●
CPVC to PVC Drain Adapters - 1/2” CPVC to 3/4” PVC	KGAAD0110PVC	●	●	●	●	●	●
Horizontal Trap Grommet - Direct Vent	KGACK0101HCK	All DV Horizontal					
Condensate Neutralizer Kit	P908–0001	●	●	●	●	●	●
External Trap Kit	KGAET0201ETK	●	●	●	●	●	●
Ductwork Adapter Accessories							
Furnace Base Kit for Combustible Floors	KGASB0201ALL	●	●	●	●	●	●
Coil Adapter Kits – No Offset	KGADA0101ALL	●	●	●	●	●	●
Coil Adapter Kits – Single Offset	KGADA0201ALL	●	●	●	●	●	●
Coil Adapter Kits – Double Offset	KGADA0301ALL	●	●	●	●	●	●
Return Air Base (Upflow Applications) 14.0–in. wide	KGARP0301B14	●					
Return Air Base (Upflow Applications) 17.5–in. wide	KGARP0301B17		●	●			
Return Air Base (Upflow Applications) 21.0–in. wide	KGARP0301B21				●	●	
Return Air Base (Upflow Applications) 24.5–in. wide	KGARP0301B24						●
IAQ Device Duct Adapters 20.0–in. IAQ to 16 in. Side Return	KGAAD0101MEC	20”x25” IAQ Devices					
IAQ Device Duct Adapters 24.0–in. IAQ to 16 in. Side Return	KGAAD0201MEC	24”x25” IAQ Devices					
Gas Conversion Accessories							
Gas Conversion Kit - Nat to LP	KGCNP5201VSP	●	●	●	●	●	●
Gas Conversion Kit - LP to Nat	KGCPN4401VSP	●	●	●	●	●	●
Gas Orifice Kit - #42 (Nat Gas)	LH32DB207	●	●	●	●	●	●
Gas Orifice Kit - #43 (Nat Gas)	LH32DB202	●	●	●	●	●	●
Gas Orifice Kit - #44 (Nat Gas)	LH32DB200	●	●	●	●	●	●
Gas Orifice Kit - #45 (Nat Gas)	LH32DB205	●	●	●	●	●	●
Gas Orifice Kit - #46 (Nat Gas)	LH32DB208	●	●	●	●	●	●
Gas Orifice Kit - #47 (Nat Gas)	LH32DB078	●	●	●	●	●	●
Gas Orifice Kit - #48 (Nat Gas)	LH32DB076	●	●	●	●	●	●
Gas Orifice Kit - #54 (LP)	LH32DB203	●	●	●	●	●	●
Gas Orifice Kit - #55 (LP)	LH32DB201	●	●	●	●	●	●
Gas Orifice Kit - #56 (LP)	LH32DB206	●	●	●	●	●	●
Gas Orifice Kit - 1.25mm (LP)	LH32DB209	●	●	●	●	●	●
Gas Orifice Kit - 1.30mm (LP)	LH32DB210	●	●	●	●	●	●
Control Accessories							
Twinning Kit	KGATW0801HSI		●	●		●	●
IAQ Accessories							
Filter Rack – Side Return for 1” Filters	KGAFR0201ALL	●	●	●	●	●	●
Filter Rack – Bottom Return for 1” Filters – 14.2” wide	KGBFR0401B14	●					
Filter Rack – Bottom Return for 1” Filters – 17.5” wide	KGBFR0501B17		●	●			
Filter Rack – Bottom Return for 1” Filters – 21.0” wide	KGBFR0601B21				●	●	
Filter Rack – Bottom Return for 1” Filters – 24.5” wide	KGBFR0701B24						●
Filter Pack (6 pack) – Washable - 16x25x1	KGAWF1306UFR	●	●	●	●	●	●
Filter Pack (6 pack) – Washable - 24x25x1	KGAWF1506UFR	●	●	●	●	●	●
EZ-Flex Filter - 16” (406 mm)	EXPXXFIL0016	Use with EZXCAB–1016					
EZ-Flex Filter - 20” (508 mm)	EXPXXFIL0020	Use with EZXCAB–1020					
EZ-Flex Filter - 24” (610 mm)	EXPXXFIL0024	Use with EZXCAB–1024					
EZ-Flex Filter with End Caps - 16” (406 mm)	EXPXXUNV0016	Use with EZXCAB–1016					
EZ-Flex Filter with End Caps - 20” (508 mm)	EXPXXUNV0020	Use with EZXCAB–1020					
EZ-Flex Filter with End Caps - 24” (610 mm)	EXPXXUNV0024	Use with EZXCAB–1024					
Cartridge Media Filter - 16” (406 mm)	FILXXCAR0016	Use with FILCABXL–1016					
Cartridge Media Filter - 20” (508 mm)	FILXXCAR0020	Use with FILCABXL–1020					
Cartridge Media Filter - 24” (610 mm)	FILXXCAR0024	Use with FILCABXL–1024					

● = Used with the model furnace

AIR DELIVERY - CFM

Cooling[4] and Heating Air Delivery - CFM (Bottom Return[5] with Filter)

(SW1-5 and SW2–2 set to OFF, except as indicated. See notes 1 and 2.)

Unit Size	Cooling Switch Settings			External Static Pressure (ESP) In. W.C.									
	SW2-8	SW2-7	SW2-6	0.1	0.2	0.3	0.4	0.5	0.6	0.7	0.8	0.9	1.0
30040													
Clg Default:	OFF	OFF	OFF	1125	1080	1020	970	905	855	805	755	700	635
Cooling (SW2)	OFF	OFF	ON	615	555	510	475	440	395	355	270	230	note 8
	OFF	ON	OFF	785	740	695	665	630	590	565	520	485	450
	OFF	ON	ON	990	950	910	875	850	815	770	720	670	615
	ON	OFF	OFF	1125	1080	1020	970	905	855	805	755	700	635
	ON	OFF	ON	1125	1080	1020	970	905	855	805	755	700	635
	ON	ON	OFF	1125	1080	1020	970	905	855	805	755	700	635
	ON	ON	ON	1125	1080	1020	970	905	855	805	755	700	635
Clg SW2:	Maximum Clg Airflow [2]			1125	1080	1020	970	905	855	805	755	700	635
Heating (SW1)	High Heat Airflow [3]			815	770	725	695	660	625	595	550	510	475
	Low Heat Airflow [3]			660	605	560	530	495	450	415	340	300	note 7

Unit Size	Cooling Switch Settings			External Static Pressure (ESP) In. W.C.									
	SW2-8	SW2-7	SW2-6	0.1	0.2	0.3	0.4	0.5	0.6	0.7	0.8	0.9	1.0
42060													
Clg Default:	OFF	OFF	OFF	1330	1295	1260	1220	1190	1150	1110	1075	1045	1005
Cooling (SW2)	OFF	OFF	ON	725	660	600	520	435	See note 4				
	OFF	ON	OFF	780	725	660	615	540	See note 4				
	OFF	ON	ON	975	925	875	835	785	750	690	655	610	570
	ON	OFF	OFF	1160	1120	1090	1045	1010	970	920	885	840	800
	ON	OFF	ON	1330	1295	1260	1220	1190	1150	1110	1075	1045	1005
	ON	ON	OFF	1705	1650	1595	1545	1475	1415	1340	1275	1200	1105
	ON	ON	ON	1705	1650	1595	1545	1475	1415	1340	1275	1200	1105
Clg SW2:	Maximum Clg Airflow [2]			1705	1650	1595	1545	1475	1415	1340	1275	1200	1105
Heating (SW1)	High Heat Airflow [3]			1145	1105	1075	1030	995	955	905	870	825	785
	Low Heat Airflow [3]			870	820	760	720	655	620	560	525	470	435

Unit Size	Cooling Switch Settings			External Static Pressure (ESP) In. W.C.									
	SW2-8	SW2-7	SW2-6	0.1	0.2	0.3	0.4	0.5	0.6	0.7	0.8	0.9	1.0
48080													
Clg Default:	OFF	OFF	OFF	1805	1765	1720	1665	1610	1540	1475	1400	1315	1235
Cooling (SW2)	OFF	OFF	ON	775	635	455	230	See note 8					
	OFF	ON	OFF	840	740	675	625	555	See note 4				
	OFF	ON	ON	995	955	910	860	815	770	720	660	620	585
	ON	OFF	OFF	1175	1140	1090	1060	1025	980	940	905	855	815
	ON	OFF	ON	1325	1280	1245	1210	1180	1140	1105	1070	1025	990
	ON	ON	OFF	1545	1515	1480	1445	1410	1380	1350	1315	1245	1175
	ON	ON	ON	1805	1765	1720	1665	1610	1540	1475	1400	1315	1235
Clg SW2:	Maximum Clg Airflow [2]			1805	1765	1720	1665	1610	1540	1475	1400	1315	1235
Heating (SW1)	High Heat Airflow [3]			1520	1490	1455	1420	1385	1355	1320	1285	1220	1155
	Low Heat Airflow [3]			1180	1145	1095	1065	1030	985	945	910	860	820

AIR DELIVERY - CFM (CONTINUED)

Cooling[4] and Heating Air Delivery - CFM (Bottom Return[5] with Filter)

(SW1-5 and SW2−2 set to OFF, except as indicated. See notes 1 and 2.)

Unit Size	Cooling Switch Settings			External Static Pressure (ESP) In. W.C.									
	SW2-8	SW2-7	SW2-6	0.1	0.2	0.3	0.4	0.5	0.6	0.7	0.8	0.9	1.0
60080													
Clg Default:	OFF	OFF	OFF	1905	1870	1825	1785	1750	1700	1665	1625	1560	1460
Cooling (SW2)	OFF	OFF	ON	950	770	620	515	440	365	See note 4			
	OFF	ON	OFF	1015	935	880	825	765	690	625	580	See note 4	
	OFF	ON	ON	1155	1105	1040	990	920	875	815	755	710	645
	ON	OFF	OFF	1335	1290	1245	1190	1145	1085	1040	990	930	890
	ON	OFF	ON	1520	1485	1435	1390	1340	1300	1255	1200	1160	1115
	ON	ON	OFF	1905	1870	1825	1785	1750	1700	1665	1625	1560	1460
	ON	ON	ON	2290	2230	2160	2085	2005	1915	1820	1730	1640	1525
Clg SW2:	Maximum Clg Airflow [2]			2290	2230	2160	2085	2005	1915	1820	1730	1640	1525
Heating (SW1)	High Heat Airflow [3]			1575	1535	1485	1445	1400	1350	1310	1260	1215	1170
	Low Heat Airflow [3]			1230	1170	1125	1065	1015	955	900	855	795	755

Unit Size	Cooling Switch Settings			External Static Pressure (ESP) In. W.C.									
	SW2-8	SW2-7	SW2-6	0.1	0.2	0.3	0.4	0.5	0.6	0.7	0.8	0.9	1.0
60100													
Clg Default:	OFF	OFF	OFF	1890	1845	1800	1755	1700	1655	1610	1560	1510	1460
Cooling (SW2)	OFF	OFF	ON	1015	825	630	485	405	325	See note 4			
	OFF	ON	OFF	1080	895	815	740	690	615	555	475	See note 4	
	OFF	ON	ON	1155	1080	1020	940	890	825	785	710	660	590
	ON	OFF	OFF	1310	1260	1195	1140	1075	1025	970	925	875	810
	ON	OFF	ON	1520	1475	1425	1365	1315	1255	1210	1155	1110	1055
	ON	ON	OFF	1890	1845	1800	1755	1700	1655	1610	1560	1510	1460
	ON	ON	ON	2290	2230	2160	2085	2005	1915	1820	1730	1640	1525
Clg SW2:	Maximum Clg Airflow [2]			2290	2230	2160	2085	2005	1915	1820	1730	1640	1525
Heating (SW1)	High Heat Airflow [3]			1905	1865	1825	1775	1730	1685	1640	1590	1545	1490
	Low Heat Airflow [3]			1480	1435	1375	1330	1265	1215	1160	1115	1060	1005

Unit Size	Cooling Switch Settings			External Static Pressure (ESP) In. W.C.									
	SW2-8	SW2-7	SW2-6	0.1	0.2	0.3	0.4	0.5	0.6	0.7	0.8	0.9	1.0
66120													
Clg Default:	OFF	OFF	OFF	2010	1960	1910	1850	1800	1750	1690	1645	1565	1480
Cooling (SW2)	OFF	OFF	ON	1015	805	645	550	480	See note 4				
	OFF	ON	OFF	1075	975	915	835	765	See note 4				
	OFF	ON	ON	1205	1135	1055	1000	935	See note 4				
	ON	OFF	OFF	1400	1330	1260	1190	1145	1080	1035	970	905	845
	ON	OFF	ON	1615	1550	1500	1435	1370	1325	1265	1215	1160	1110
	ON	ON	OFF	2010	1960	1910	1850	1800	1750	1690	1645	1565	1480
	ON	ON	ON	note 8	2375	2300	2205	2115	2010	1890	1750	1645	1550
Clg SW2:	Maximum Clg Airflow [2]			note 8	2375	2300	2205	2115	2010	1890	1750	1645	1550
Heating (SW1)	High Heat Airflow [3]			note 8	2375	2300	2205	2115	2010	1890	1750	1645	1550
	Low Heat Airflow [3]			1735	1675	1625	1560	1500	1455	1395	1345	1285	1225

1. Nominal 350 CFM/ton cooling airflow is delivered with SW1-5 and SW2−2 set to OFF.
   Set both SW1-5 and SW2−2 to ON for +7% airflow (nominal 370 CFM/ton).
   Set SW1-5 to ON and SW2−2 to OFF for +15% airflow (nominal 400 CFM/ton).
   Set SW2−2 to ON and SW1-5 to OFF for -7% airflow (nominal 325 CFM/ton).
   The above adjustments in airflow are subject to motor horsepower range/capacity.
2. Maximum cooling airflow is achieved when switches SW2-6, SW2-7, SW2-8 and SW1-5 are set to ON, and SW2−2 is set to OFF.
3. All heating CFM's are when low heat rise adjustment switch (SW1-3) and comfort/efficiency adjustment switch (SW1-4) are both set to OFF.
4. Ductwork must be sized for high-heating CFM within the operational range of E.S.P. Operation within the blank areas of the chart is not recommended because high-heat operation will be above 1.0 E.S.P.
5. All airflows of 1800 CFM or less on 21” and 24.5” casing size furnaces are 5% less on side return only installations.
6. Return air above 1800 CFM on 24.5” casing requires two sides, one side and bottom, or bottom only to allow sufficient airflow to the furnace.
7. For upflow applications, air entering from one side into both the side of the furnace and a return air base counts as a side and bottom return.
8. Airflow not stable at this E.S.P.

MAXIMUM EQUIVALENT VENT LENGTH - FT. (M)

NOTE: Maximum Equivalent Vent Length (MEVL) does NOT include elbows or terminations. Use Table 2 - Deductions from Maximum Equivalent Vent Length to determine allowable vent length for each application.

Table 1 – Maximum Equivalent Vent Length - Ft. (M)
0 to 4500 Ft. (0 to 1370 M) Altitude

Altitude FT (M)	Unit Size BTU/Hr	DIRECT VENT (2-PIPE) AND NON-DIRECT VENT (1-PIPE)									
		Vent Pipe Diameter (in.) [1]									
		1-1/2		2		2-1/2		3		4	
0 to 2000 (0 to 610)	40,000 [3]	50	(15.2)	210	(64.0)	250	(76.2)	NA [2]		NA	
	60,000	30	(9.1)	135	(41.1)	235	(71.6)	265	(80.8)	NA	
	80,000	20	(6.1)	70	(21.3)	175	(53.3)	235	(71.6)	265	(80.8)
	100,000	NA		25	(7.6)	110	(33.5)	235	(71.6)	265	(80.8)
	120,000	NA		NA		15	(4.6)	100	(30.5)	250	(76.2)
	140,000 [4]	NA		NA		10	(3.0)	90	(27.4)	210	(64.0)
2001 to 3000 (610 to 914)	40,000	45	(13.7)	198	(60.4)	232	(70.7)	NA		NA	
	60,000	27	(8.2)	127	(38.7)	222	(67.7)	250	(76.2)	NA	
	80,000	17	(5.2)	64	(19.5)	165	(50.3)	222	(67.7)	249	(75.9)
	100,000	NA		22	(6.7)	104	(31.7)	223	(68.0)	250	(76.2)
	120,000	NA		NA		11	(3.4)	93	(28.3)	237	(72.2)
	140,000 [4]	NA		NA		NA		80	(24.4)	185	(56.4)
3001 to 4000 (914 to 1219)	40,000	39	(11.9)	184	(56.1)	214	(65.2)	NA		NA	
	60,000	23	(7.0)	119	(36.3)	210	(64.0)	235	(71.6)	NA	
	80,000	15	(4.6)	59	(18.0)	155	(47.2)	210	(64.0)	232	(70.7)
	100,000	NA		19	(5.8)	98	(29.9)	211	(64.3)	236	(71.9)
	120,000	NA		NA		8	(2.4)	86	(26.2)	224	(68.3)
	140,000 [4]	NA		NA		NA		79	(24.1)	158	(48.2)
4001 to 4500 (1219 to 1370)	40,000	36	(11.0)	177	(53.9)	205	(62.5)	NA		NA	
	60,000	21	(6.4)	115	(35.1)	204	(62.2)	228	(69.5)	NA	
	80,000	14	(4.3)	56	(17.1)	150	(45.7)	202	(61.6)	224	(68.3)
	100,000	NA		17	(5.2)	94	(28.7)	205	(62.5)	229	(69.8)
	120,000	NA		NA		NA		83	(25.3)	217	(66.1)
	140,000 [4]	NA		NA		NA		69	(21.0)	146	(44.5)

NOTES: See notes at end of venting tables.
See Table 3 for altitudes over 4500 ft. (1370 M)

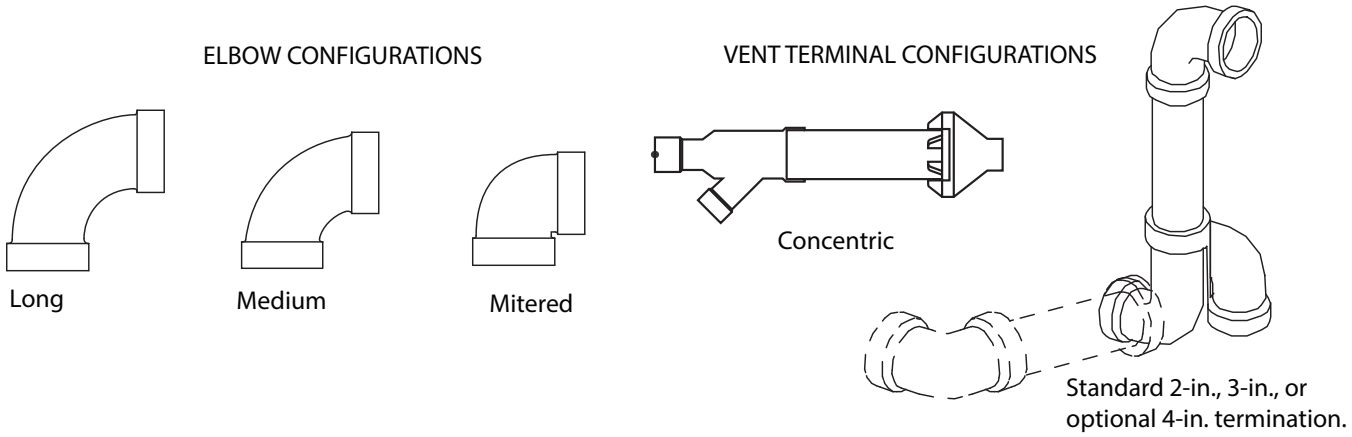

Table 2 – Deductions from Maximum Equivalent Vent Length - Ft. (M)

Pipe Diameter (in):	1-1/2		2		2-1/2		3		4	
Mitered 90° Elbow	8	(2.4)	8	(2.4)	8	(2.4)	8	(2.4)	8	(2.4)
Medium Radius 90° Elbow	5	(1.5)	5	(1.5)	5	(1.5)	5	(1.5)	5	(1.5)
Long Radius 90° Elbow	3	(0.9)	3	(0.9)	3	(0.9)	3	(0.9)	3	(0.9)
Mitered 45° Elbow	4	(1.2)	4	(1.2)	4	(1.2)	4	(1.2)	4	(1.2)
Medium Radius 45° Elbow	2.5	(0.8)	2.5	(0.8)	2.5	(0.8)	2.5	(0.8)	2.5	(0.8)
Long Radius 45° Elbow	1.5	(0.5)	1.5	(0.5)	1.5	(0.5)	1.5	(0.5)	1.5	(0.5)
Tee	16	(4.9)	16	(4.9)	16	(4.9)	16	(4.9)	16	(4.9)
Concentric Vent Termination	NA		0	(0.0)	NA		0	(0.0)	NA	
Standard Vent Termination	0	(0.0)	0	(0.0)	0	(0.0)	0	(0.0)	0	(0.0)

Venting System Length Calculations

The Total Equivalent Vent Length (TEVL) for **EACH** combustion air or vent pipe equals the length of the venting system, plus the equivalent length of elbows used in the venting system from Table 2.

Standard vent terminations or factory accessory concentric vent terminations count for zero deduction.

See vent system manufacturer's data for equivalent lengths of flexible vent pipe or other termination systems. **DO NOT ASSUME** that one foot of flexible vent pipe equals one foot of straight PVC/ABS DWV vent pipe.

Compare the Total Equivalent Vent Length to the Maximum Equivalent Vent Lengths in Tables 1 and 3.

Example 1

A direct-vent 60,000 Btuh furnace installed at 2100 ft. (640 M). Venting system includes, **FOR EACH PIPE**, 100 feet (30 M) of vent pipe, 95 feet (28 M) of combustion air inlet pipe, (3) 90° long radius elbows, (2) 45° long radius elbows and a factory accessory concentric vent kit.

Can this application use 2-in. (50 mm ND) PVC/ABS DWV vent piping?

Measure the required linear length of air inlet and vent pipe; insert the longest of the two here:					100 ft	Use length of the longer of the vent or air inlet piping system
Add equiv length of (3) 90° long-radius elbows (use the highest number of elbows for either the vent or inlet pipe)	3	x	3 ft	=	9 ft.	From Table 2
Add equiv length of (2) 45° long-radius elbows (use the highest number of elbows for either the vent or inlet pipe)	2	x	1.5 ft	=	3 ft.	From Table 2
Add equiv length of vent termination					0 ft.	From Table 2
Add correction for flexible vent pipe, if any					0 ft.	From Vent Manufacturer's instructions; zero for PVC/ABS DWV
Total Equivalent Vent Length (TEVL)					112 ft.	Add all of the above lines
Maximum Equivalent Vent Length (MEVL)					127 ft.	For 2" pipe from Table 1
Is TEVL less than MEVL?					**YES**	**Therefore, 2" pipe may be used**

Example 2

A direct-vent 60,000 Btuh furnace installed at 2100 ft. (640 M) Venting system includes, **FOR EACH PIPE**, 100 feet (30 M) of vent pipe, 95 feet (28 M) of combustion air inlet pipe, (3) 90° long radius elbows, and a polypropylene concentric vent kit. Also includes 20 feet (6 M) of flexible polypropylene vent pipe, included within the 100 feet (30 M) of vent pipe.

Assume that one meter of flexible 60 mm or 80 mm polypropylene pipe equals 1.8 meters of PVC/ABS pipe. **VERIFY FROM VENT MANUFACTURER'S INSTRUCTIONS.**

Can this application use 60 mm (O.D.) polypropylene vent piping? If not what size piping can be used?

Measure the required linear length of air inlet and vent pipe; insert the longest of the two here:					100 ft	Use length of the longer of the vent or air inlet piping system
Add equiv length of (3) 90° long-radius elbows (use the highest number of elbows for either the vent or inlet pipe)	3	x	3 ft	=	9 ft.	From Vent Manufacturer's instructions
Add equiv length of (2) 45° long-radius elbows (use the highest number of elbows for either the vent or inlet pipe)	0	x		=	0 ft.	From Vent Manufacturer's instructions
Add equiv length of vent termination	9 M	x	3 ft/M	=	18 ft.	From Vent Manufacturer's instructions
Add correction for flexible vent pipe, if any	1.8	x	20 ft	=	36 ft.	From Vent Manufacturer's instructions
Total Equivalent Vent Length (TEVL)					163 ft.	Add all of the above lines
Maximum Equivalent Vent Length (MEVL)					127 ft.	For 2" pipe from Table 1
Is TEVL less than MEVL?					**NO**	**Therefore, 60mm pipe may NOT be used; try 80 mm**
Maximum Equivalent Vent Length (MEVL)					250 ft.	For 3" pipe from Table 1
Is TEVL less than MEVL?					**YES**	**Therefore, 80 mm pipe may be used**

MAXIMUM EQUIVALENT VENT LENGTH - FT. (M) (CONTINUED)

NOTE: Maximum Equivalent Vent Length (MEVL) includes standard and concentric vent termination and does NOT include elbows. Use Table 2 - Deductions from Maximum Equivalent Vent Length to determine allowable vent length for each application.

Table 3 – Maximum Equivalent Vent Length - Ft. (M)
4501 to 10,000 Ft. (1371 to 3048 M) Altitude

Altitude FT (M) [5]	Unit Size	DIRECT VENT (2-PIPE) AND SINGLE-PIPE									
		Vent Pipe Diameter (in.) [1]									
		1-1/2		2		2-1/2		3		4	
4501 to 5000 (1370 to 1524)	40,000	33	(10.1)	171	(52.1)	196	(59.7)	NA [2]		NA	
	60,000	20	(6.1)	111	(33.8)	198	(60.4)	221	(67.4)	NA	
	80,000	13	(4.0)	54	(16.5)	146	(44.5)	195	(59.4)	216	(65.8)
	100,000	NA		16	(4.9)	91	(27.7)	200	(61.0)	222	(67.7)
	120,000	NA		NA		NA		80	(24.4)	211	(64.3)
	140,000 [4]	NA		NA		NA		60	(18.3)	134	(40.8)
5001 to 6000 (1524 to 1829)	40,000	27	(8.2)	158	(48.2)	179	(54.6)	NA		NA	
	60,000	16	(4.9)	103	(31.4)	186	(56.7)	207	(63.1)	NA	
	80,000	11	(3.4)	49	(14.9)	137	(41.8)	183	(55.8)	200	(61.0)
	100,000	NA		12	(3.7)	85	(25.9)	188	(57.3)	208	(63.4)
	120,000	NA		NA		NA		74	(22.6)	199	(60.7)
	140,000 [4]	NA		NA		NA		50	(15.2)	109	(33.2)
6001 to 7000 (1829 to 2134)	40,000	21	(6.4)	145	(44.2)	162	(49.4)	NA		NA	
	60,000	13	(4.0)	96	(29.3)	174	(53.0)	194	(59.1)	NA	
	80,000	NA		44	(13.4)	120	(36.6)	171	(52.1)	185	(56.4)
	100,000	NA		10	(3.0)	79	(24.1)	178	(54.3)	195	(59.4)
	120,000	NA		NA		NA		68	(20.7)	187	(57.0)
	140,000 [4]	NA		NA		NA		41	(12.5)	87	(26.5)
7001 to 8000 (2134 to 2438)	40,000	15	(4.6)	133	(40.5)	146	(44.5)	NA		NA	
	60,000	10	(3.0)	89	(27.1)	163	(49.7)	181	(55.2)	NA	
	80,000	NA		40	(12.2)	120	(36.6)	159	(48.5)	170	(51.8)
	100,000	NA		NA		73	(22.3)	167	(50.9)	182	(55.5)
	120,000	NA		NA		NA		62	(18.9)	175	(53.3)
	140,000 [4]	NA		NA		NA		32	(9.8)	63	(19.2)
8001 to 9000 (2438 to 2743)	40,000	10	(3.0)	121	(36.9)	130	(39.6)	NA		NA	
	60,000	7	(2.1)	82	(25.0)	152	(46.3)	168	(51.2)	NA	
	80,000	NA		35	(10.7)	111	(33.8)	148	(45.1)	156	(47.5)
	100,000	NA		NA		67	(20.4)	157	(47.9)	170	(51.8)
	120,000	NA		NA		NA		56	(17.1)	164	(50.0)
	140,000 [4]	NA		NA		NA		23	(7.0)	42	(12.8)
9001 to 10,000 (2743 to 3048)	40,000	5	(1.5)	110	(33.5)	115	(35.1)	NA		NA	
	60,000	NA		76	(23.2)	142	(43.3)	156	(47.5)	NA	
	80,000	NA		31	(9.4)	103	(31.4)	137	(41.8)	142	(43.3)
	100,000	NA		NA		62	(18.9)	147	(44.8)	157	(47.9)
	120,000	NA		NA		NA		51	(15.5)	153	(46.6)
	140,000 [4]	NA		NA		NA		16	(4.9)	20	(6.1)

NOTES:
1. Use only the vent pipe sizes shown for each furnace. It is NOT necessary to choose the smallest diameter pipe possible for venting.
2. NA – Not allowed. Pressure switch will not close, or flame disturbance may result.
3. Total equivalent vent lengths under 10' for 40,000 BTUH furnaces from 0 to 2000 ft. (0 to 610 M) above sea level require use of an outlet choke plate . **Failure to use an outlet choke when required may result in flame disturbance or flame sense lockout.**
4. Not all furnace families include 140,000 BTUH input models.
5. Vent sizing for Canadian installations over 4500 ft (1370 M) above sea level are subject to acceptance by local authorities having jurisdiction.
6. Size both the combustion air and vent pipe independently, then use the larger size for both pipes.
7. Assume the two 45° elbows equal one 90° elbow. Wide radius elbows are desirable and may be required in some cases.
8. Elbow and pipe sections within the furnace casing and at the vent termination should not be included in vent length or elbow count.
9. The minimum pipe length is 5 ft. (1.5 M) linear feet (meters) for all applications.
10. Use 3–in. (76 mm) diameter vent termination kit for installations requiring 4–in. (102 mm) diameter pipe.

MAXIMUM ALLOWABLE EXPOSED VENT LENGTHS INSULATION TABLE - FT. (M)

Two Stage Furnace High Heat Input	Winter Design Temp ° F (° C)	Pipe Length in Ft. & M	No Insulation					3/8-in. (9.5 mm)					1/2-in. (12.7 mm)				
			Pipe Diameter-inches (mm)					Pipe Diameter-inches (mm)					Pipe Diameter-inches (mm)				
			1.5	2.0	2.5	3.0	4.0	1.5	2.0	2.5	3.0	4.0	1.5	2.0	2.5	3.0	4.0
			(38)	(51)	(64)	(76)	(102)	(38)	(51)	(64)	(76)	(102)	(38)	(51)	(64)	(76)	(102)
40000*	20 (-10)	Ft.	40.0	35.0	35.0	N/A	N/A	50.0	104.0	94.0	N/A	N/A	50.0	122.0	110.0	N/A	N/A
		M	12.2	10.7	10.7	N/A	N/A	15.2	31.7	28.7	N/A	N/A	15.2	37.2	33.5	N/A	N/A
	0 (-20)	Ft.	19.0	14.0	12.0	N/A	N/A	50.0	61.0	54.0	N/A	N/A	50.0	74.0	65.0	N/A	N/A
		M	5.8	4.3	3.7	N/A	N/A	15.2	18.6	16.5	N/A	N/A	15.2	22.6	19.8	N/A	N/A
	-20 (-30)	Ft.	9.0	3.0	1.0	N/A	N/A	50.0	41.0	35.0	N/A	N/A	50.0	51.0	43.0	N/A	N/A
		M	2.7	0.9	0.3	N/A	N/A	15.2	12.5	10.7	N/A	N/A	15.2	15.5	13.1	N/A	N/A
	-40 (-40)	Ft.	3.0	0.0	0.0	N/A	N/A	39.0	29.0	23.0	N/A	N/A	48.0	37.0	30.0	N/A	N/A
		M	0.9	0.0	0.0	N/A	N/A	11.9	8.8	7.0	N/A	N/A	14.6	11.3	9.1	N/A	N/A
60000	20 (-10)	Ft.	30.0	51.0	51.0	45.0	N/A	30.0	135.0	138.0	120.0	N/A	30.0	135.0	162.0	141.0	N/A
		M	9.1	15.5	15.5	13.7	N/A	9.1	41.1	42.1	36.6	N/A	9.1	41.1	49.4	43.0	N/A
	0 (-20)	Ft.	30.0	24.0	23.0	16.0	N/A	30.0	93.0	82.0	69.0	N/A	30.0	111.0	98.0	83.0	N/A
		M	9.1	7.3	7.0	4.9	N/A	9.1	28.3	25.0	21.0	N/A	9.1	33.8	29.9	25.3	N/A
	-20 (-30)	Ft.	18.0	11.0	9.0	1.0	N/A	30.0	65.0	56.0	44.0	N/A	30.0	79.0	68.0	55.0	N/A
		M	5.5	3.4	2.7	0.3	N/A	9.1	19.8	17.1	13.4	N/A	9.1	24.1	20.7	16.8	N/A
	-40 (-40)	Ft.	10.0	3.0	0.0	0.0	N/A	30.0	48.0	40.0	29.0	N/A	30.0	59.0	50.0	38.0	N/A
		M	3.0	0.9	0.0	0.0	N/A	9.1	14.6	12.2	8.8	N/A	9.1	18.0	15.2	11.6	N/A
80000	20 (-10)	Ft.	20.0	64.0	64.0	56.0	47.0	20.0	70.0	173.0	150.0	125.0	20.0	70.0	175.0	177.0	147.0
		M	6.1	19.5	19.5	17.1	14.3	6.1	21.3	52.7	45.7	38.1	6.1	21.3	53.3	53.9	44.8
	0 (-20)	Ft.	20.0	32.0	30.0	22.0	11.0	20.0	70.0	104.0	87.0	67.0	20.0	70.0	124.0	104.0	82.0
		M	6.1	9.8	9.1	6.7	3.4	6.1	21.3	31.7	26.5	20.4	6.1	21.3	37.8	31.7	25.0
	-20 (-30)	Ft.	20.0	17.0	14.0	6.0	0.0	20.0	70.0	71.0	57.0	40.0	20.0	70.0	86.0	71.0	52.0
		M	6.1	5.2	4.3	1.8	0.0	6.1	21.3	21.6	17.4	12.2	6.1	21.3	26.2	21.6	15.8
	-40 (-40)	Ft.	15.0	7.0	5.0	0.0	0.0	20.0	61.0	52.0	40.0	24.0	20.0	70.0	64.0	50.0	33.0
		M	4.6	2.1	1.5	0.0	0.0	6.1	18.6	15.8	12.2	7.3	6.1	21.3	19.5	15.2	10.1
100000	20 (-10)	Ft.	N/A	25.0	79.0	70.0	59.0	N/A	25.0	110.0	186.0	155.0		25.0	110.0	219.0	182.0
		M	N/A	7.6	24.1	21.3	18.0	N/A	7.6	33.5	56.7	47.2		7.6	33.5	66.8	55.5
	0 (-20)	Ft.	N/A	25.0	40.0	31.0	19.0	N/A	25.0	110.0	109.0	86.0		25.0	110.0	131.0	104.0
		M	N/A	7.6	12.2	9.4	5.8	N/A	7.6	33.5	33.2	26.2		7.6	33.5	39.9	31.7
	-20 (-30)	Ft.	N/A	23.0	21.0	13.0	0.0	N/A	25.0	91.0	74.0	54.0		25.0	110.0	90.0	68.0
		M	N/A	7.0	6.4	4.0	0.0	N/A	7.6	27.7	22.6	16.5		7.6	33.5	27.4	20.7
	-40 (-40)	Ft.	N/A	13.0	10.0	1.0	0.0	N/A	25.0	68.0	53.0	35.0		25.0	83.0	66.0	46.0
		M	N/A	4.0	3.0	0.3	0.0	N/A	7.6	20.7	16.2	10.7		7.6	25.3	20.1	14.0
120000	20 (-10)	Ft.	N/A	N/A	15.0	85.0	73.0	N/A	N/A	15.0	100.0	190.0	N/A	N/A	15.0	100.0	224.0
		M	N/A	N/A	4.6	25.9	22.3	N/A	N/A	4.6	30.5	57.9	N/A	N/A	4.6	30.5	68.3
	0 (-20)	Ft.	N/A	N/A	15.0	41.0	29.0	N/A	N/A	15.0	100.0	109.0	N/A	N/A	15.0	100.0	131.0
		M	N/A	N/A	4.6	12.5	8.8	N/A	N/A	4.6	30.5	33.2	N/A	N/A	4.6	30.5	39.9
	-20 (-30)	Ft.	N/A	N/A	15.0	20.0	7.0	N/A	N/A	15.0	94.0	71.0	N/A	N/A	15.0	114.0	88.0
		M	N/A	N/A	4.6	6.1	2.1	N/A	N/A	4.6	28.7	21.6	N/A	N/A	4.6	34.7	26.8
	-40 (-40)	Ft.	N/A	N/A	15.0	7.0	0.0	N/A	N/A	15.0	69.0	48.0	N/A	N/A	15.0	85.0	62.0
		M	N/A	N/A	4.6	2.1	0.0	N/A	N/A	4.6	21.0	14.6	N/A	N/A	4.6	25.9	18.9

* Not all families have these models.

* Pipe length (ft) specified for maximum pipe lengths located in unconditioned spaces. Pipes located in unconditioned space cannot exceed total allowable pipe length calculated from Table 1 or 3.

† Insulation thickness based on R value of 3.5 per in.

RETURN AIR TEMPERATURE

This furnace is designed for continuous return-air minimum temperature of 60°F (15°C) db or intermittent operation down to 55°F (13°C) db such as when used with a night setback thermometer. Return-air temperature must not exceed 80°F (27°C) db. Failure to follow these return air limits may affect reliability of heat exchangers, motors and controls.

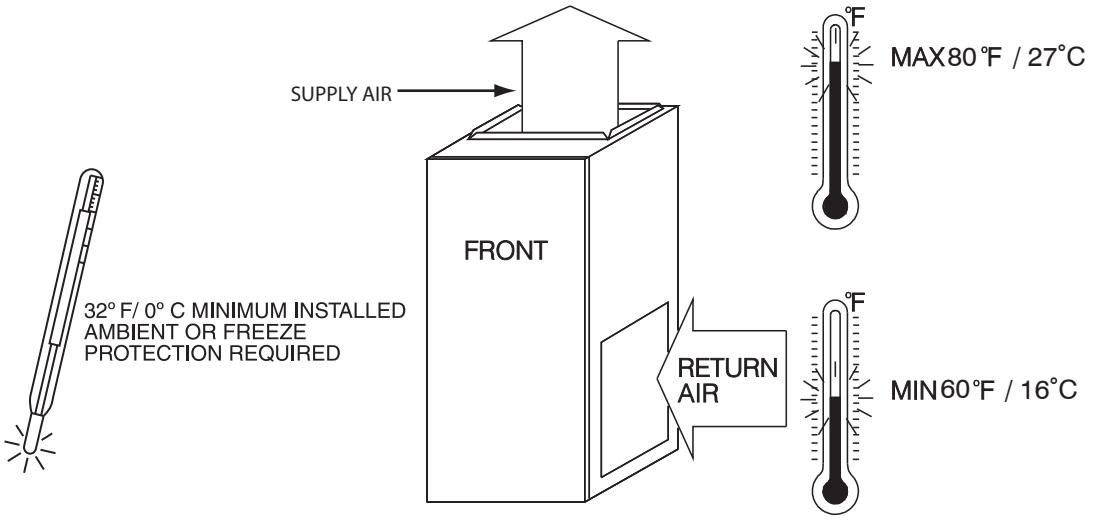

A10490

MINIMUM CLEARANCES TO COMBUSTIBLE MATERIALS

POSITION	CLEARANCE
Rear	0 (0 mm)
Front (Combustion air openings in furnace and in structure)	1 in. (25 mm)
Required for service**	24 in. (610 mm)*
All Sides of Supply Plenum**	1 in. (25 mm)
Sides	0 (0 mm)
Vent	0 (0 mm)
Top of Furnace	1 in. (25 mm)

* Recommended
**Consult your local building codes

COMBUSTION-AIR PIPE FOR NON-DIRECT (1-PIPE) VENT APPLICATION

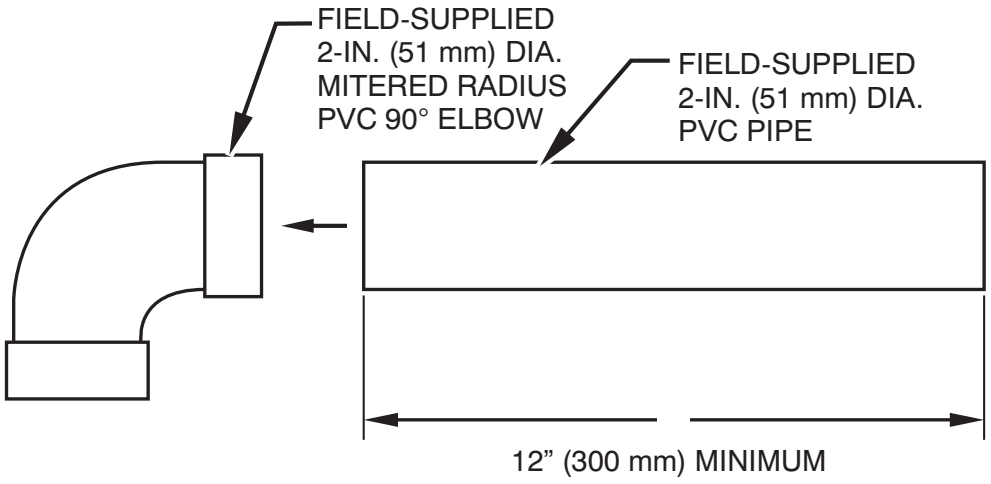

A12376

NOTE: See Installation Instructions for specific venting configurations.

DOWNFLOW SUBBASE

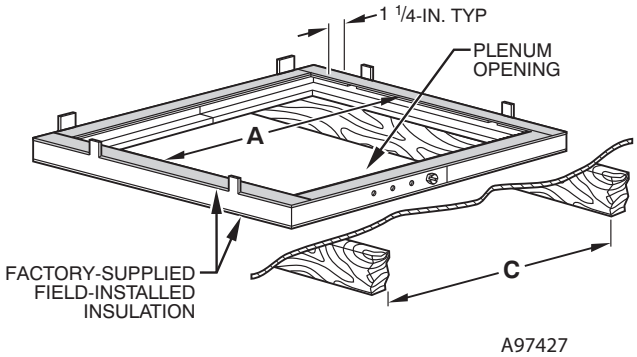

Assembled

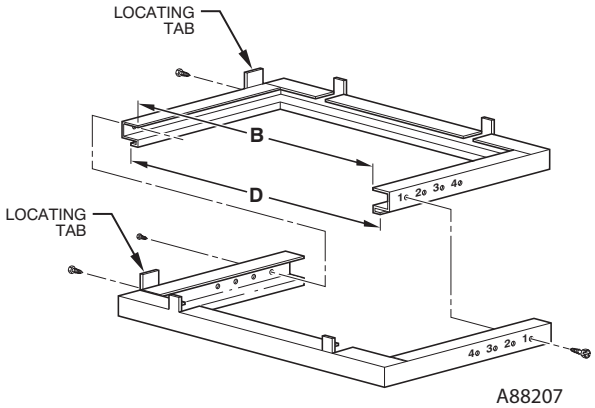

Disassembled

PG96VAT

DIMENSIONS (IN. / MM)						
FURNACE CASING WIDTH	FURNACE IN DOWNFLOW APPLICATION	PLENUM OPENING*		FLOOR OPENING		HOLE NO. FOR WIDTH ADJUSTMENT
		A	B	C	D	
14–3/16 (360)	Furnace with or without Cased Coil Assembly or Coil Box	11–3/16 (322)	19 (483)	13–7/16 (341)	20–5/8 (600)	4
17–1/2 (445)	Furnace with or without Cased Coil Assembly or Coil Box	15–1/8 (384)	19 (483)	16–3/4 (426)	20–5/8 (600)	3
21 (533)	Furnace with or without Cased Coil Assembly or Coil Box	18–5/8 (396)	19 (483)	20–1/4 (514)	20–5/8 (600)	2
24–1/2 (622)	Furnace with or without Cased Coil Assembly or Coil Box	22–1/8 (562)	19 (483)	23–3/4 (603)	20–5/8 (600)	1

*The plenum should be constructed 1/4–in. (6 mm) smaller in width and depth than the plenum dimensions shown above.

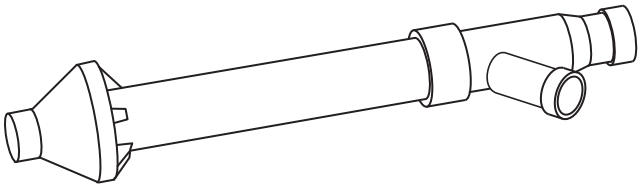

Concentric Vent Kit

A93086

A concentric vent kit allows vent and combustion-air pipes to terminate through a single exit in a roof or side wall. One pipe runs inside the other allowing venting through the inner pipe and combustion air to be drawn in through the outer pipe.

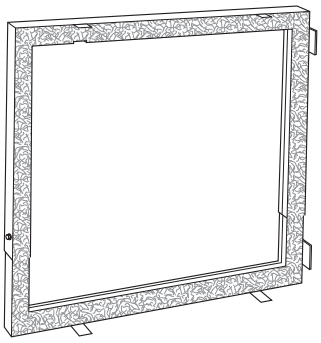

Downflow Subbase

A88202

One base fits all furnace sizes. The base is designed to be installed between the furnace and a combustible floor when no coil box is used or when a coil box other than a Payne cased coil is used. It is CSA design certified for use with Payne® branded furnaces when installed in downflow applications.

TYPICAL WIRING SCHEMATIC

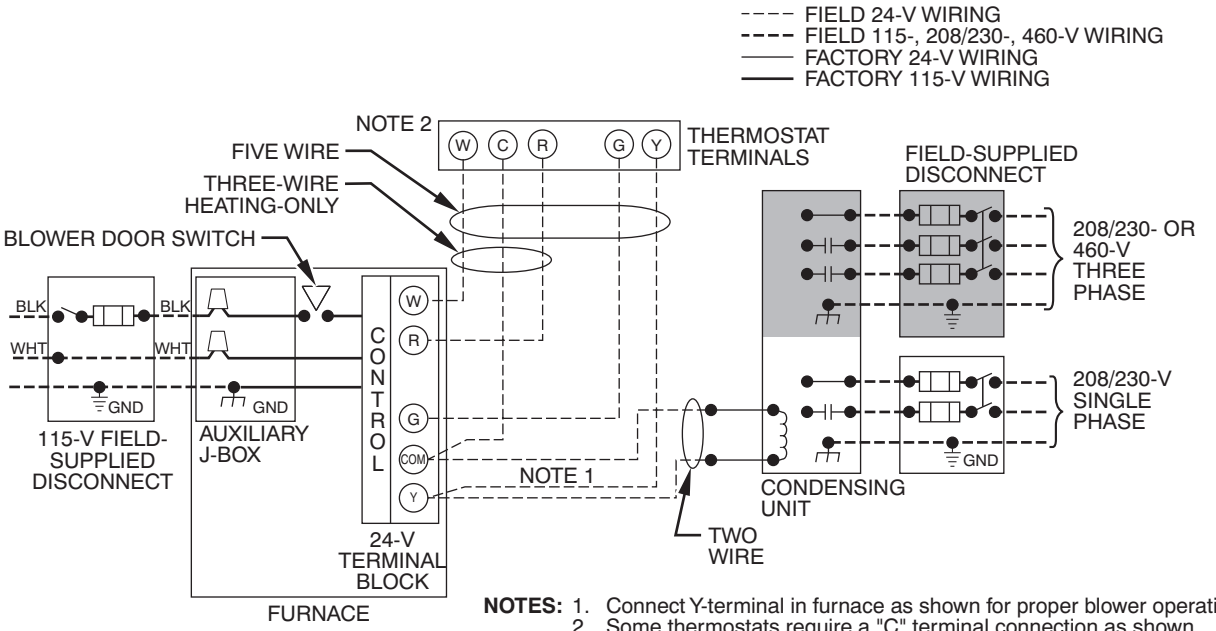

NOTES:
1. Connect Y-terminal in furnace as shown for proper blower operation.
2. Some thermostats require a "C" terminal connection as shown.
3. If any of the original wire, as supplied, must be replaced, use same type or equivalent wire.

A11387

PG96VAT

DIMENSIONAL DRAWING

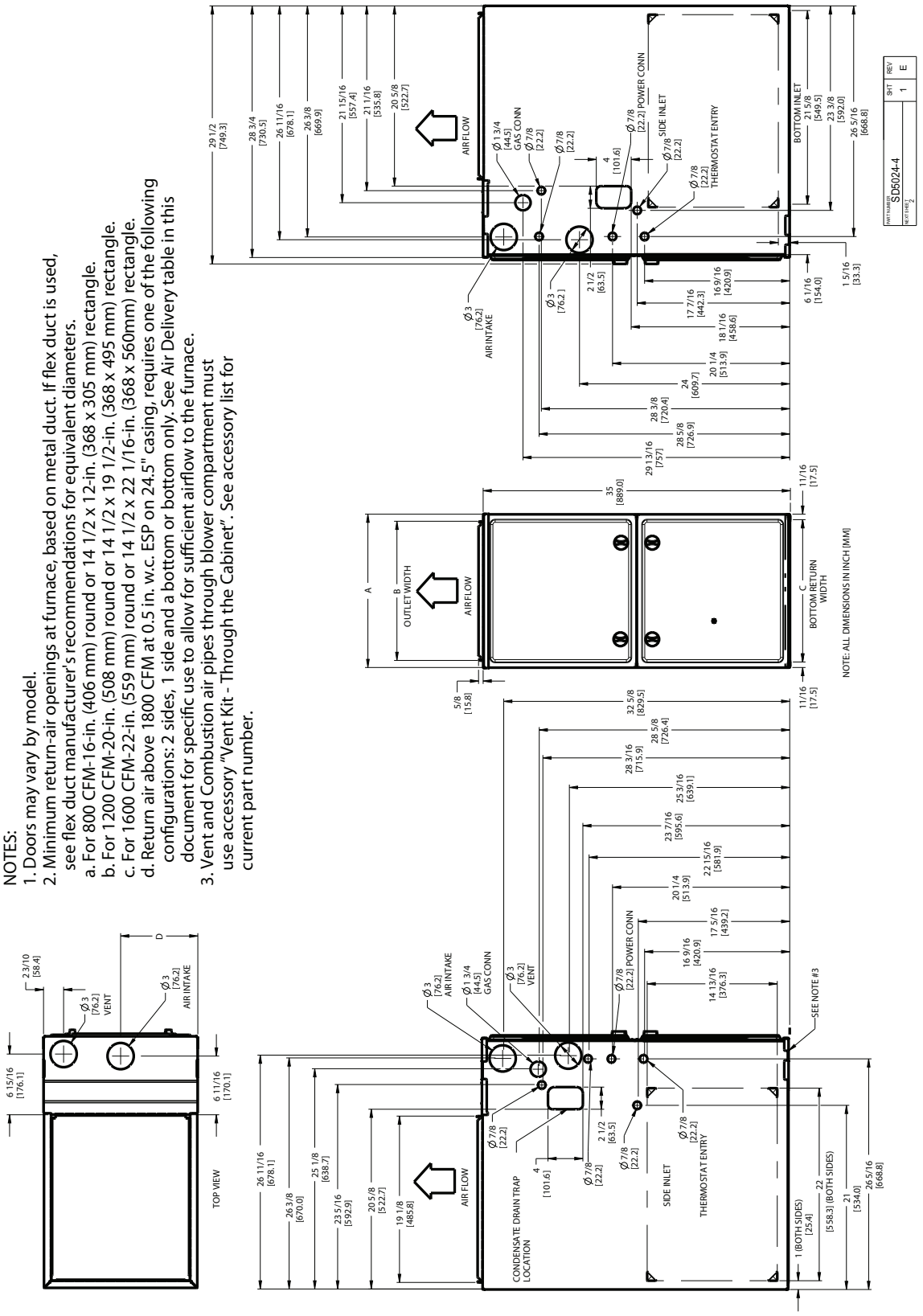

A12267

PG96VAT FURNACE SIZE	A CABINET WIDTH	B OUTLET WIDTH	C BOTTOM INLET WIDTH	D AIR INTAKE	SHIP WT. LB (KG)
30040	14 – 3/16 (361)	12 – 1/2 (319)	12 – 9/16 (322)	7 – 1/8 (181)	121.0 (54.4)
42060	17 – 1/2 (445)	15 – 7/8 (403)	16 (406)	8 – 3/4 (222)	141.5 (63.7)
48080					151.5 (68.2)
60080	21 (533)	19 – 3/8 (492)	19 – 1/2 (495)	10 – 1/2 (267)	156.0 (70.9)
60100					166.0 (74.7)
66120	24 – 1/2 (622)	22 – 7/8 (581)	23 (584)	12 – 1/4 (311)	190.0 (85.5)

GUIDE SPECIFICATIONS

General

System Description

Furnish a _____ 4-way multipoise gas-fired condensing furnace for use with natural gas or propane (factory-authorized conversion kit required for propane).

Quality Assurance

Unit will be designed, tested and constructed to the current ANSI Z 21.47/CSA 2.3 design standard for gas-fired central furnaces.

Unit will be third party certified by CSA to the current ANSI Z 21.47/CSA 2.3 design standard for gas-fired central furnaces. Unit will carry the CSA Blue Star® and Blue Flame® labels. Unit efficiency testing will be performed per the current DOE test procedure as listed in the Federal Register.

Unit will be certified for capacity and efficiency and listed in the latest AHRI Consumer's Directory of Certified Efficiency Ratings.

Unit will carry the current Federal Trade Commission Energy Guide efficiency label.

PG96VAT

Delivery, Storage, and Handling

Unit will be shipped as single package only and is stored and handled per unit manufacturer's recommendations.

Warranty (for inclusion by specifying engineer)

U.S. and Canada only. Warranty certificate available upon request.

Equipment

Blower Wheel and ECM Blower Motor

Galvanized blower wheel shall be centrifugal type, statically and dynamically balanced. Blower motor of ECM type shall be permanently lubricated with sealed ball bearings, of _____hp, and have infinitely variable speed from 600-1200 RPM operating only when motor inputs are provided. Blower motor shall be direct drive and soft mounted to the blower housing to reduce vibration transmission.

Filters

Furnace shall have reusable-type filters. Filter shall be _____ in. (mm) X _____ in. (mm). An accessory highly efficient Media Filter is available as an option. _____ Media Filter.

Casing

Casing shall be of .030 in. thickness minimum, pre-painted steel.

Draft Inducer Motor

Draft inducer motor shall be two-speed PSC design.

Primary Heat Exchangers

Primary heat exchangers shall be 3-Pass corrosion- resistant aluminized steel of fold-and-crimp sectional design and applied operating under negative pressure.

Secondary Heat Exchangers

Secondary heat exchangers shall be of a stainless steel flow-through of fin-and-tube design and applied operating under negative pressure.

Controls

Controls shall include a micro-processor-based integrated electronic control board with at least 16 service troubleshooting codes displayed via diagnostic flashing LED light on the control, a self-test feature that checks all major functions of the furnace, and a replaceable automotive-type circuit protection fuse. Multiple operational settings available, including separate blower speeds for low heat, high heat, low cooling, high cooling and continuous fan. Continuous fan speed may be adjusted from the thermostat. Cooling airflow will be selectable between 325 to 400 CFM per ton of air conditioning. Features will also include temporary reduced airflow in the cooling mode for improved dehumidification when a dehumidification-capable thermostat is used.

Operating Characteristics

Heating capacity shall be _____ Btuh input; _____ Btuh output capacity.

Fuel Gas Efficiency shall be_____ AFUE.

Air delivery shall be _____ cfm minimum at 0.50 in. W.C. external static pressure.

Dimensions shall be: depth_____in. (mm); width _____in. (mm); height_____in. (mm) (casing only). Height shall be _____in. (mm) with A/C coil and _____in. (mm) overall with plenum.

Electrical Requirements

Electrical supply shall be 115 volts, 60 Hz, single-phase (nominal). Minimum wire size shall be _____AWG; maximum fuse size of HACR-type designated circuit breaker shall be _____ amps.

Special Features

Refer to section of the product data identifying accessories and descriptions for specific features and available enhancements.

©2014 Payne Heating & Cooling Systems • 7310 W. Morris St. • Indianapolis, IN 46231
Edition Date: 06/14

Catalog No: SS–PG96VAT–05

Manufacturer reserves the right to change, at any time, specifications and designs without notice and without obligations.

Replaces: SS–PG96VAT–04