24ABC6
Comfort™ 16 Air Conditioner with Puron® Refrigerant 1–1/2 to 5 Nominal Tons

Carrier
turn to the experts™

Product Data

Puron™ the environmentally sound refrigerant

Comfort SERIES

Carrier's Air Conditioners with Puron® refrigerant provide a collection of features unmatched by any other family of equipment. The 24ABC has been designed utilizing Carrier's Puron refrigerant. The environmentally sound refrigerant allows you to make a responsible decision in the protection of the earth's ozone layer.

This product has been designed and manufactured to meet Energy Star® criteria for energy efficiency when matched with appropriate coil components. Refer to the combination ratings in the Product Data for system combinations that meet Energy Star® guidelines.

NOTE: Ratings contained in this document are subject to change at any time. Always refer to the AHRI directory (www.ahridirectory.org) for the most up-to-date ratings information.

INDUSTRY LEADING FEATURES / BENEFITS

Efficiency

- 14 - 16.5 SEER/11.0- 13.5 EER
- Microtube Technology™ refrigeration system
- Indoor air quality accessories available

Sound

- Sound level as low as 76 dBA
- Sound level as low as 74 dBA with accessory sound blanket

Comfort

- System supports Edge® Thermidistat™ or standard thermostat controls

Reliability

- Puron® refrigerant - environmentally sound, won't deplete the ozone layer and low lifetime servce cost.
- Scroll compressor
- Internal pressure relief valve
- Internal thermal overload
- Filter drier
- Balanced refrigeration system for maximum reliability

Durability

WeatherArmor™ protection package:

- Solid, durable sheet metal construction
- Dense wire coil guard standard
- Baked-on, complete outer coverage, powder paint

Applications

- Long-line - up to 250 feet (76.20 m) total equivalent length, up to 200 feet (60.96 m) condenser above evaporator, or up to 80 ft. (24.38 m) evaporator above condenser (See Longline Guide for more information.)
- Low ambient (down to -20°F/-28.9°C)) with accessory kit

MODEL NUMBER NOMENCLATURE

1	2	3	4	5	6	7	8	9	10	11	12	13
N	N	A	A	A/N	N	N	N	A/N	A/N	A/N	N	N
2	**4**	**A**	**B**	**C**	**6**	**3**	**6**	**A**	**0**	**0**	**3**	0
Product Series		Product Family	Tier	Major Series	SEER	Cooling Capacity		Grille Variations	Open	Open	Voltage	Series
24=AC		A=RES AC	B=Comfort	C=Puron	6=16 SEER			A = Dense W = Standard	0=Not Defined	0=Not Defined	3=208/230–1	0 = Original Series

24ABC6

Puron™ the environmentally sound refrigerant

AHRI CERTIFIED™ www.ahridirectory.org

Use of the AHRI Certified TM Mark indicates a manufacturer's participation in the program For verification of certification for individual products, go to www.ahridirectory.org.

Certified System™

ISO 9001
QMI-SAI Global

c UL US

ENERGY STAR

This product has been designed and manufactured to meet Energy Star® criteria for energy efficiency when matched with appropriate coil components. However, proper refrigerant charge and proper air flow are critical to achieve rated capacity and efficiency. Installation of this product should follow all manufacturing refrigerant charging and air flow instructions. **Failure to confirm proper charge and air flow may reduce energy efficiency and shorten equipment life.**

STANDARD FEATURES

Feature	**18**	**24**	**30**	**36**	**42**	**48 / 49**	**60 / 61**
Puron Refrigerant	X	X	X	X	X	X	X
Maximum SEER *	16.0	16.0	16.5	16.5	16.0	16.0	16.0
Scroll Compressor	X	X	X	X	X	X	X
Field Installed Filter Drier	X	X	X	X	X	X	X
Front Seating Service Valves	X	X	X	X	X	X	X
Internal Pressure Relief Valve	X	X	X	X	X	X	X
Internal Thermal Overload	X	X	X	X	X	X	X
Long Line capability	X	X	X	X	X	X	X
Low Ambient capability with Kit	X	X	X	X	X	X	X
Dense Grille	X	X	X	X	X	X	X

* With approved combinations

X = Standard

PHYSICAL DATA

UNIT SIZE–VOLTAGE, SERIES	**18–31**	**24–30**	**30–30**	**36–30**	**42–30**	**48–31**	**49–30**	**60–30**	**61–30**
Operating Weight lb (kg)	125 (56.7)	147 (66.5)	153 (69.3)	165 (74.8)	213 (96.4)	264 (119.7)	231 (104.8)	272 (123.4)	272 (123.4)
Shipping Weight lb (kg)	154 (69.9)	183 (82.8)	188 (85.2)	204 (92.5)	254 (115.2)	317 (143.8)	269 (222.0)	310 (140.6)	310 (140.6)
Compressor Type	Scroll								
REFRIGERANT	Puron® (R–410A)								
Control	TXV (Puron® Hard Shutoff)								
Charge lb (kg)	4.60 (2.09)	6.00 (2.72)	6.81 (3.09)	7.00 (3.18)	8.62 (3.91)	13.0 (5.90)	9.00 (4.08)	14.50 (6.58)	14.50 (6.58)
COND FAN	Propeller Type, Direct Drive								
Air Discharge	Vertical								Vertical
Air Qty (CFM)	1881	2614	2614	3223	3810	4046	4046	4046	4046
Motor HP	1/12	1/10	1/10	1/12	1/5	1/4	1/4	1/4	1/4
Motor RPM	1100	1100	1100	800	800	800	800	800	800
COND COIL									
Face Area (Sq ft)	11.50	15.10	17.20	17.60	25.15	25.15	25.15	30.15	30.15
Fins per In.	25	25	25	25	25	20	20	20	20
Rows	1	1	1	1	1	2	1	2	2
Circuits	3	4	4	4	6	7	7	8	8
VALVE CONNECT. (In. ID)									
Vapor	3/4	3/4	3/4	7/8	7/8	7/8	7/8	7/8	7/8
Liquid	3/8	3/8	3/8	3/8	3/8	3/8	3/8	3/8	3/8
REFRIGERANT TUBES (In. OD)									
Rated Vapor*	3/4			7/8				1–1/8	
Max Liquid Line †	3/8								

* Units are rated with 25 ft (7.6 m) of lineset length. See Vapor Line Sizing and Cooling Capacity Loss table when using other sizes and lengths of lineset.
Note: See unit Installation Instruction for proper installation.

† See *Liquid Line Sizing For Cooling Only Systems with Puron Refrigerant* tables.

REFRIGERANT PIPING LENGTH LIMITATIONS

Liquid Line Sizing and Maximum Total Equivalent Lengths† for Cooling Only Systems with Puron® Refrigerant:

The maximum allowable length of a residential split system depends on the liquid line diameter and vertical separation between indoor and outdoor units.

See Table below for liquid line sizing and maximum lengths :

Maximum Total Equivalent Length
Outdoor Unit BELOW Indoor Unit

Size	Liquid Line Connection	Liquid Line Diam. w/ TXV	AC with Puron Refrigerant Maximum Total Equivalent Length†: Outdoor unit BELOW Indoor Vertical Separation ft (m)								
			0–5 (0–1.5)	6–10 (1.8–3.0)	11–20 (3.4–6.1)	21–30 (6.4–9.1)	31–40 (9.4–12.2)	41–50 (12.5–15.2)	51–60 (15.5–18.3)	61–70 (18.6–21.3)	71–80 (21.6–24.4)
18000 AC with Puron	3/8	1/4	150	150	125	100	100	75	– –	– –	– –
		5/16	250*	250*	250*	250*	250*	250*	250*	225*	150
		3/8	250*	250*	250*	250*	250*	250*	250*	250*	250*
24000 AC with Puron	3/8	1/4	75	75	75	50	50	– –	– –	– –	– –
		5/16	250*	250*	250*	250*	250*	225*	175	125	100
		3/8	250*	250*	250*	250*	250*	250*	250*	250*	250*
30000 AC with Puron	3/8	1/4	30	– –	– –	– –	– –	– –	– –	– –	– –
		5/16	175	225*	200	175	125	100	75	– –	– –
		3/8	250*	250*	250*	250*	250*	250*	250*	250*	250*
36000 AC with Puron	3/8	5/16	175	150	150	100	100	100	75	– –	– –
		3//8	250*	250*	250*	250*	250*	250*	250*	250*	250*
42000 AC with Puron	3/8	5/16	125	100	100	75	75	50	– –	– –	– –
		3/8	250*	250*	250*	250*	250*	250*	250*	250*	150
48000 AC with Puron	3/8	3/8	250*	250*	250*	250*	250*	250*	230	160	– –
49000 AC with Puron	3/8	3/8	250*	250*	250*	250*	250*	250*	230	160	– –
60000 AC with Puron	3/8	3/8	250*	250*	250*	225*	190	150	110	– –	– –
61000 AC with Puron	3/8	3/8	250*	250*	250*	225*	190	150	110	– –	– –

*** Maximum actual length not to exceed 200 ft (61 m)**

† Total equivalent length accounts for losses due to elbows or fitting. See the Long Line Guideline for details.

– – = outside acceptable range

Maximum Total Equivalent Length
Outdoor Unit ABOVE Indoor Unit

Size	Liquid Line Connection	Liquid Line Diam. w/ TXV	AC with Puron Refrigerant Maximum Total Equivalent Length†: Outdoor unit ABOVE Indoor Vertical Separation ft (m)							
			25 (7.6)	26–50 (7.9–15.2)	51–75 (15.5–22.9)	76–100 (23.2–30.5)	101–125 (30.8–38.1)	126–150 (38.4–45.7)	151–175 (46.0–53.3)	176–200 (53.6–61.0)
18000 AC with Puron	3/8	1/4	175	250*	250*	250*	250*	250*	250*	250*
		5/16	250*	250*	250*	250*	250*	250*	250*	250*
		3/8	250*	250*	250*	250*	250*	250*	250*	250*
24000 AC with Puron	3/8	1/4	100	125	175	200	225*	250*	250*	250*
		5/16	250*	250*	250*	250*	250*	250*	250*	250*
		3/8	250*	250*	250*	250*	250*	250*	250*	250*
30000 AC with Puron	3/8	1/4	30	– –	– –	– –	– –	– –	– –	– –
		5/16	250*	250*	250*	250*	250*	250*	250*	250*
		3/8	250*	250*	250*	250*	250*	250*	250*	250*
36000 AC with Puron	3/8	5/16	225*	250*	250*	250*	250*	250*	250*	250*
		3/8	250*	250*	250*	250*	250*	250*	250*	250*
42000 AC with Puron	3/8	5/16	175	200	250*	250*	250*	250*	250*	250*
		3/8	250*	250*	250*	250*	250*	250*	250*	250*
48000 AC with Puron	3/8	3/8	250*	250*	250*	250*	250*	250*	250*	250*
49000 AC with Puron	3/8	3/8	250*	250*	250*	250*	250*	250*	250*	250*
60000 AC with Puron	3/8	3/8	250*	250*	250*	250*	250*	250*	250*	250*
61000 AC with Puron	3/8	3/8	250*	250*	250*	250*	250*	250*	250*	250*

*** Maximum actual length not to exceed 200 ft (61 m)**

† Total equivalent length accounts for losses due to elbows or fitting. See the Long Line Guideline for details.

– – = outside acceptable range

REFRIGERANT CHARGE ADJUSTMENTS

Liquid Line Size	Puron Charge oz/ft
3/8	0.60 (Factory charge for lineset = 9 oz)
5/16	0.40
1/4	0.27

Units are factory charged for 15 ft (4.6 m) of 3/8" liquid line. The factory charge for 3/8" lineset 9 oz. When using other length or diameter liquid lines, charge adjustments are required per the chart above.

Charging Formula:

[(Lineset oz/ft x total length) – (factory charge for lineset)] = charge adjustment

Example 1: System has 15 ft of line set using existing 1/4" liquid line. What charge adjustment is required?

Formula: (.27 oz/ft x 15ft) – (9 oz) = (-4.95) oz.

Net result is to remove 4.95 oz of refrigerant from the system

Example 2: System has 45 ft of existing 5/16" liquid line. What is the charge adjustment?

Formula: (.40 oz/ft. x 45ft) – (9 oz.) = 9 oz.

Net result is to add 9 oz of refrigerant to the system

24ABC6

LONG LINE APPLICATIONS

An application is considered Long Line, when the refrigerant level in the system requires the use of accessories to maintain acceptable refrigerant management for systems reliability. See Accessory Usage Guideline table for required accessories. Defining a system as long line depends on the liquid line diameter, actual length of the tubing, and vertical separation between the indoor and outdoor units.

For Air Conditioner systems, the chart below shows when an application is considered Long Line.

AC WITH PURON® REFRIGERANT LONG LINE DESCRIPTION ft (m)
Beyond these lengths, long line accessories are required

Liquid Line Size	Units On Same Level	Outdoor Below Indoor	Outdoor Above Indoor
1/4	No accessories needed within allowed lengths	No accessories needed within allowed lengths	175 (53.3)
5/16	120 (36.6)	50 (15.2)	120 (36.6)
3/8	80 (24.4)	35 (10.7)	80 (24.4)

Note: See Long Line Guideline for details

VAPOR LINE SIZING AND COOLING CAPACITY LOSS

Acceptable vapor line diameters provide adequate oil return to the compressor while avoiding excessive capacity loss. The suction line diameters shown in the chart below are acceptable for AC systems with Puron refrigerant:

Unit Nominal Size (Btuh)	Maximum Liquid Line Diameters (In. OD)	Vapor Line Diameters (In. OD)	Cooling Capacity Loss (%) Total Equivalent Line Length ft. (m)								
			26–50 (7.9–15.2)	51–80 (15.5–24.4)	81–100 (24.7–30.5)	101–125 (30.8–38.1)	126–150 (38.4–45.7)	151–175 (46.0–53.3)	176–200 (53.6–61.0)	201–225 (61.3–68.6)	226–250 (68.9–76.2)
18000 1 Stage AC with Puron	3/8	1/2	1	2	3	5	6	7	8	9	11
		5/8	0	1	1	1	2	2	2	3	3
		3/4	0	0	0	0	1	1	1	1	1
24000 1 Stage AC with Puron	3/8	5/8	0	1	2	2	3	3	4	5	5
		3/4	0	0	1	1	1	1	1	2	2
		7/8	0	0	0	0	0	1	1	1	1
30000 1 Stage AC with Puron	3/8	5/8	1	2	3	3	4	5	6	7	8
		3/4	0	0	1	1	1	2	2	2	3
		7/8	0	0	0	0	1	1	1	1	1
36000 1 Stage AC with Puron	3/8	5/8	1	2	4	5	6	8	9	10	12
		3/4	0	1	1	2	2	3	3	4	4
		7/8	0	0	0	1	1	1	1	2	2
42000 1 Stage AC with Puron	3/8	3/4	0	1	2	2	3	4	4	5	6
		7/8	0	0	1	1	1	2	2	2	3
		1 1/8	0	0	0	0	0	0	0	0	0
48000, 49000 1 Stage AC with Puron	3/8	3/4	0	1	2	3	4	5	5	6	7
		7/8	0	0	1	1	2	2	2	3	3
		1 1/8	0	0	0	0	0	0	0	1	1
60000, 61000 1 Stage AC with Puron	3/8	3/4	1	2	4	5	6	7	9	10	11
		7/8	0	1	2	2	3	4	4	5	5
		1 1/8	0	0	0	1	1	1	1	1	1

Applications in this area may be long line and may have height restrictions. See the *Residential Piping and Long Line Guideline*.

ACCESSORY THERMOSTATS

PART NUMBER	PROGRAM	GAS	ELECTRIC	HEAT PUMP	HEAT	COOL
Comfort						
TC–PAC01	5–2 Day	√	√		1	1
TC–NAC01	NP	√	√		1	1
TCSNAC01	NP	√	√		1	1

THERMOSTAT ACCESSORIES		
PART NUMBER	**DESCRIPTION**	**THERMOSTATS USED WITH**
TSTATXXCNV10‡	Thermostat Conversion Kit (4 to 5 wire) – 10 pack	All Carrier® branded thermostats
TX–LBP01	Large Decorative Backplate	TP–Pxx, TP–Nxx, TC–Pxx
TX–MBP01	Medium Decorative Backplate	TC–Nxx, TB–Pxx

ACCESSORIES

KIT NUMBER	DESCRIPTION	Unit Sizes – Series								
		18–31	24–30	30–30	36–30	42–30	48–31	49–30	60–30	61–30
KAAFT0101AAA	FREEZE THERMOSTAT	X	X	X	X	X	X	X	X	X
KAATD0101TDR	TIME DELAY RELAY	X	X	X	X	X	X	X	X	X
KSALA0301410	LOW AMBIENT PSW	X	X	X	X	X	X	X	X	X
KSALA0601AAA†	MOTORMASTER 230V	X	X	X	X	X	X	X	X	X
HC32GE234	MOTOR FAN BALL BEARING	X								
HC34GE240	MOTOR FAN BALL BEARING		X	X						
HC32GE229	MOTOR FAN BALL BEARING				X					
HC38GE228	MOTOR FAN BALL BEARING					X				
HC40GE228	MOTOR FAN BALL BEARING						X	X	X	X
KSAHS1701AAA	HARD START (CAP / RELAY)	X	X	X	X	X	X	X	X	X
KSACY0101AAA	CYCLE PROTECTOR	X	X	X	X	X	X	X	X	X
KSASF0101AAA	SUPPORT FEET	X	X	X	X	X	X	X	X	X
KAACS0201PTC	START ASSIST PTC	X	X	X	X	X	X	X	X	X
KAALS0201LLS	LIQUID LINE SOLENOID	X	X	X	X	X	X	X	X	X
KAAWS0101AAA	WINTER START	X	X	X	X	X	X	X	X	X
KAACH1701AAA	CRANKCASE HTR	X	X	X	X					
KAACH1601AAA	CRANKCASE HTR					X	S	S	S	S
KSATX0201PUR	TXV PURON HSO	X	X	X						
KSATX0301PUR	TXV PURON HSO				X					
KSATX0401PUR	TXV PURON HSO					X		X		
KSATX0501PUR	TXV PURON HSO						X		X	X
KSASH0601COP	SOUND HOOD	X	X	X	X			X		
KSASH2101COP	SOUND HOOD					X	X		X	X
KAALP0401PUR	LOW PRESSURE SWITCH	X	X	X	X	X	X	X	X	X
KAAHI0501PUR	HIGH PRESSURE SWITCH	X	X	X	X	X	X	X	X	X

† Required accessories include ball bearing fan motor, compressor start assist (CAP / Relay), crankcase heater, evaporator freeze stat, hard shut–off TXV.
X = Accessory / S – Standard

ACCESSORY USAGE GUIDELINE

ACCESSORY	REQUIRED FOR LOW–AMBIENT COOLING APPLICATIONS (Below 55°F/12.8°C)	REQUIRED FOR LONG LINE APPLICATIONS* (Over 80 ft./24.38 m)	REQUIRED FOR SEA COAST APPLICATIONS (Within 2 miles/3.22 km)
Ball Bearing Fan Motor	Yes†	No	No
Compressor Start Assist Capacitor and Relay	Yes	Yes	No
Crankcase Heater	Yes	Yes	No
Evaporator Freeze Thermostat	Yes	No	No
Hard Shut–Off TXV	Yes	Yes	Yes
Liquid Line Solenoid Valve	No	No	No
Motor Master® Control or Low–ambient Pressure Switch	Yes	No	No
Support Feet	Recommended	No	Recommended
Winter Start Control	Yes	No	No

* For tubing line sets between 80 and 200 ft. (24.38 and 60.96 m) and/or 20 ft. (6.09 m) vertical differential, refer to Residential Split–System Longline Application Guideline.

† Required for Low–Ambient Controller (full modulation feature) MotorMaster® Control.

24ABC6

Accessory Description and Usage (Listed Alphabetically)

1. Ball-Bearing Fan Motor

A fan motor with ball bearings which permits speed reduction while maintaining bearing lubrication.

Usage Guideline:

Required on all units when MotorMaster® is used.

2. Compressor Start Assist - Capacitor and Relay

Start capacitor and relay gives a ”hard” boost to compressor motor at each start up.

Usage Guideline:

Required for reciprocating compressors in the following applications:

- Long line
- Low ambient cooling
- Hard shut off expansion valve on indoor coil
- Liquid line solenoid on indoor coil

Required for single-phase scroll compressors in the following applications:

- Long line
- Low ambient cooling

Suggested for all compressors in areas with a history of low voltage problems.

3. Compressor Start Assist — PTC Type

Solid state electrical device which gives a ”soft” boost to the compressor at each start-up.

Usage Guideline:

Suggested in installations with marginal power supply.

4. Crankcase Heater

An electric resistance heater which mounts to the base of the compressor to keep the lubricant warm during off cycles. Improves compressor lubrication on restart and minimizes the chance of liquid slugging.

Usage Guideline:

Required in low ambient cooling applications.

Required in long line applications.

Suggested in all commercial applications.

5. Cycle Protector

The cycle protector is designed to prevent compressor short cycling. This control provides an approximate 5-minute delay after power to the compressor has been interrupted for any reason, including power outage, protector control trip, thermostat jiggling, or normal cycling.

6. Evaporator Freeze Thermostat

An SPST temperature-actuated switch that stops unit operation when evaporator reaches freeze-up conditions.

Usage Guideline:

Required when low ambient kit has been added.

7. Low-Ambient Pressure Switch Kit

A long life pressure switch which is mounted to outdoor unit service valve. It is designed to cycle the outdoor fan motor in order to maintain head pressure within normal operating limits (approximately 100 psig to 225 psig). The control will maintain working head pressure at low-ambient temperatures down to 0°F (-18°C) when properly installed.

Usage Guideline:

A Low-Ambient Pressure Switch or MotorMaster® Low-Ambient Controller must be used when cooling operation is used at outdoor temperatures below 55°F (12.8°C).

8. MotorMaster® Low-Ambient Controller

A fan-speed control device activated by a temperature sensor, designed to control condenser fan motor speed in response to the saturated, condensing temperature during operation in cooling mode only. For outdoor temperatures down to -20°F (-28.9°C), it maintains condensing temperature at 100°F ±10°F (37.8°C ± 5.5°C).

Usage Guideline:

A MotorMaster® Low Ambient Controller or Low-Ambient Pressure Switch must be used when cooling operation is used at outdoor temperatures below 55°F (12.8°C).

Suggested for all commercial applications.

9. Outdoor Air Temperature Sensor

Designed for use with Carrier Thermostats listed in this publication. This device enables the thermostat to display the outdoor temperature. This device also

is required to enable special thermostat features such as auxiliary heat lock out.

Usage Guideline:

Suggested for all Carrier thermostats listed in this publication.

Accessory Description and Usage (Listed Alphabetically) (Continued)

10. Sound Hood

Wraparound sound reducing cover for the compressor. Reduces the sound level by about 2 dBA.

Usage Guideline:

Suggested when unit is installed closer than 15 ft (4.57 m) to quiet areas, bedrooms, etc.

Suggested when unit is installed between two houses less than 10 ft (3.05 m) apart.

11. Support Feet

Four stick-on plastic feet that raise the unit 4 in. (101.6 mm) above the mounting pad. This allows sand, dirt, and other debris to be flushed from the unit base, minimizing corrosion.

Usage Guideline:

Suggested in the following applications:

Coastal installations.

Windy areas or where debris is normally circulating.

Rooftop installations.

For improved sound ratings.

12. Thermostatic Expansion Valve (TXV)

A modulating flow-control valve which meters refrigerant liquid flow rate into the evaporator in response to the superheat of the refrigerant gas leaving the evaporator.

Kit includes valve, adapter tubes, and external equalizer tube. Hard shut off types are available.

NOTE: When using a hard shut off TXV with single phase reciprocating compressors, a Compressor Start Assist Capacitor and Relay is required.

Usage Guideline:

Required to achieve AHRI ratings in certain equipment combinations. Refer to combination ratings.

Hard shut off TXV or LLS required in air conditioner long line applications.

Required for use on all zoning systems.

13. Time-Delay Relay

An SPST delay relay which briefly continues operation of indoor blower motor to provide additional cooling after the compressor cycles off.

NOTE: Most indoor unit controls include this feature. For those that do not, use the guideline below.

Usage Guideline:

For improved efficiency ratings for certain combinations of indoor and outdoor units. Refer to AHRI Unitary Directory.

14. Winter Start Control

This control is designed to alleviate nuisance opening of the low-pressure switch by bypassing it for the first 3 minutes of operation.

ELECTRICAL DATA

UNIT SIZE	V/PH	OPER VOLTS*		COMPR		FAN	MCA	MIN WIRE SIZE† 60° C	MIN WIRE SIZE† 75° C	MAX LENGTH ft. (m)‡ 60° C	MAX LENGTH ft. (m)‡ 75° C	MAX FUSE** or CKT BRK AMPS
		MAX	MIN	LRA	RLA	FLA						
18–31	208/230/1–60	253	197	48.0	9.0	0.50	11.8	14	14	67 (20.4)	64 (19.5)	20
24–30				58.3	13.5	0.75	17.7	14	14	46 (14.0)	43 (13..1)	25
30–30				64.0	12.8	0.75	16.8	14	14	44 (13.4)	41 (12.5)	25
36–30				77.0	14.1	0.50	18.1	12	12	57 (17.4)	54 (16.5)	30
42–30				112.0	17.9	1.20	23.6	10	10	85 (25.9)	81 (24.7)	40
48–31				109.0	19.9	1.20	26.1	10	10	70 (21.3)	67 (20.4)	40
49–30				117.0	21.8	1.20	26.1	10	10	70 (21.3)	67 (20.4)	40
60–30				135.0	21.4	1.20	28.0	8	10	91 (27.7)	56 (17.1)	40
61–30				134.0	25.0	1.20	32.5	8	10	94 (28.7)	58 (17.7)	50

* Permissible limits of the voltage range at which the unit will operate satisfactorily

† If wire is applied at ambient greater than 30°C, consult table 310–16 of the NEC (NFPA 70). The ampacity of non–metallic–sheathed cable (NM), trade name ROMEX, shall be that of 60°C conditions, per the NEC (NFPA 70) Article 334–80. If other than uncoated (no–plated), 60 or 75°C insulation, copper wire (solid wire for 10 AWG or smaller, stranded wire for larger than 10 AWG) is used, consult applicable tables of the NEC (NFPA 70).

‡ Length shown is as measured one way along wire path between unit and service panel for voltage drop not to exceed 2%.

** Time–Delay fuse.

FLA – Full Load Amps
LRA – Locked Rotor Amps
MCA – Minimum Circuit Amps
RLA – Rated Load Amps

NOTE: Control circuit is 24–V on all units and requires external power source. Copper wire must be used from service disconnect to unit. All motors/compressors contain internal overload protection.

Complies with 2007 requirements of ASHRAE Standards 90.1

24ABC6

A-WEIGHTED SOUND POWER LEVEL (dBA)

Unit Size – Voltage, Series	Standard Rating (dBA)	TYPICAL OCTAVE BAND SPECTRUM (dBA without tone adjustment)						
		125	250	500	1000	2000	4000	8000
018–31	76	52.5	59.0	65.5	70.5	64.5	59.0	54.5
024–30	76	57.5	64.0	69.0	71.0	69.0	64.5	60.0
030–30	76	55.0	63.5	68.0	69.5	67.0	63.5	58.5
036–30	76	50.5	59.5	64.5	70.5	62.0	59.5	54.5
042–30	78	52.5	62.0	66.0	73.5	68.0	62.0	55.5
048–31	78	57.5	61.5	66.0	70.5	65.5	59.5	53.5
049–30	78	51.5	62.0	67.5	73.5	69.0	64.5	62.0
060–30	78	55.0	62.5	67.5	70.5	65.0	61.0	53.5
061–30	78	56.5	63.0	65.5	69.0	67.0	61.5	56.0

NOTE: Tested in accordance with AHRI Standard 270–08 (not listed in AHRI).

A-WEIGHTED SOUND POWER LEVEL (dBA) WITH SOUND SHIELD

Unit Size – Voltage, Series	Standard Rating (dBA)	TYPICAL OCTAVE BAND SPECTRUM (dBA without tone adjustment)						
		125	250	500	1000	2000	4000	8000
018–31	74	55.5	59.0	65.0	68.5	63.5	58.0	52.0
024–30	75	58.0	64.0	69.0	70.5	68.5	64.5	59.5
030–30	75	55.5	63.0	68.0	69.0	67.0	63.0	58.5
036–30	74	51.5	58.5	62.0	65.0	61.0	58.0	52.0
042–30	76	53.0	62.0	65.5	72.0	65.0	61.0	54.0
048–31	76	58.5	61.5	66.0	69.0	64.0	58.5	51.0
049–30	76	53.0	61.5	67.5	72.0	68.0	61.5	59.0
060–30	75	56.5	62.5	66.5	68.0	63.0	59.5	51.5
061–30	75	57.0	63.0	65.5	67.0	65.5	59.0	52.5

NOTE: Tested in accordance with AHRI Standard 270–08 (not listed in AHRI).

CHARGING SUBCOOLING (TXV-TYPE EXPANSION DEVICE)

UNIT SIZE–VOLTAGE, SERIES	REQUIRED SUBCOOLING °F (°C)
18–31	10 (5.6)
24–30	10 (5.6)
30–30	10 (5.6)
36–30	10 (5.6)
42–30	9 (5.0)
48–31	10 (5.6)
49–30	8 (4.4)
60–30	9 (5.0)
61–30	9 (5.0)

DIMENSIONS - ENGLISH

UNIT	SERIES	ELECTRICAL CHARACTERISTICS				A	B	C	D	E	F	G	K	L	M	N	P	OPERATING WEIGHT (lbs)	SHIPPING WEIGHT (lbs)	SHIPPING DIMENSIONS (L x W x H)
24ABC618	0	X	O	O	O	23 1/8"	28 11/16"	3 3/4"	3/4"	4 7/16"	18 1/16"	7 13/16"	2 13/16"	1/2"	13"	12"	13"	118	141	24 1/4" X 27 3/8" X 32 9/16"
24ABC624	0	X	O	O	O	31 3/16"	28 5/16"	3 3/4"	3/4"	6 9/16"	24 11/16"	9 1/8"	2 13/16"	1/2"	16"	16"	13"	147	183	32 3/8" X 35 1/2" X 32 9/16"
24ABC630	0	X	O	O	O	31 3/16"	32 5/16"	3 3/4"	3/4"	6 9/16"	24 11/16"	9 1/8"	2 13/16"	1/2"	15 1/2"	16"	14 1/4"	153	188	32 3/8" X 35 1/2" X 35 15/16"
24ABC636	0	X	O	O	O	35"	28 5/16"	3 7/8"	7/8"	6 9/16"	28 7/16"	9 1/8"	2 15/16"	5/8"	16"	16"	13"	165	204	36 1/8" X 39 5/16" X 32 9/16"
24ABC642	0	X	O	O	O	35"	39 1/8"	3 7/8"	7/8"	6 9/16"	28 7/16"	9 1/8"	2 15/16"	5/8"	16 1/2"	17 1/2"	17 1/2"	213	254	36 1/8" X 39 5/16" X 42 3/4"
24ABC648	0	X	O	O	O	35"	32 5/16"	3 7/8"	7/8"	6 9/16"	28 7/16"	9 1/8"	2 15/16"	5/8"	17"	17 1/2"	14 1/4"	231	274	36 1/8" X 39 5/16" X 35 15/16"
24ABC660	0	X	O	O	O	35"	45 15/16"	3 7/8"	7/8"	6 9/16"	28 7/16"	9 1/8"	2 15/16"	5/8"	16 1/2"	17"	16 1/4"	272	310	36 1/8" X 39 5/16" X 49 9/16"
24ABC618	1	X	O	O	O	25 3/4"	28 11/16"	3 3/4"	3/4"	4 7/16"	21 1/4"	7 13/16"	2 13/16"	1/2"	13 5/8"	13 1/2"	12 3/4"	125	154	26 7/8" X 30 1/16" X 32 9/16"
24ABC661	0	X	O	O	O	35"	45 15/16"	3 7/8"	7/8"	6 9/16"	28 7/16"	9 1/8"	2 15/16"	5/8"	16 1/2"	17"	16 1/4"	272	310	36 1/8" X 39 5/16" X 49 9/16"
24ABC648	1	X	O	O	O	35"	39 1/8"	3 7/8"	7/8"	6 9/16"	28 7/16"	9 1/8"	2 15/16"	5/8"	17 1/2"	16 1/2"	15"	264	317	36 1/8" X 39 5/16" X 42 3/4"
24ABC649	0	X	O	O	O	35"	39 1/8"	3 7/8"	7/8"	6 9/16"	28 7/16"	9 1/8"	2 15/16"	5/8"	17 1/2"	16 1/2"	15"	231	269	36 1/8" X 39 5/16" X 42 3/4"
		208-230-1-60	230-1-60	208/230-3-60	460-3-60															

X = YES
O = NO

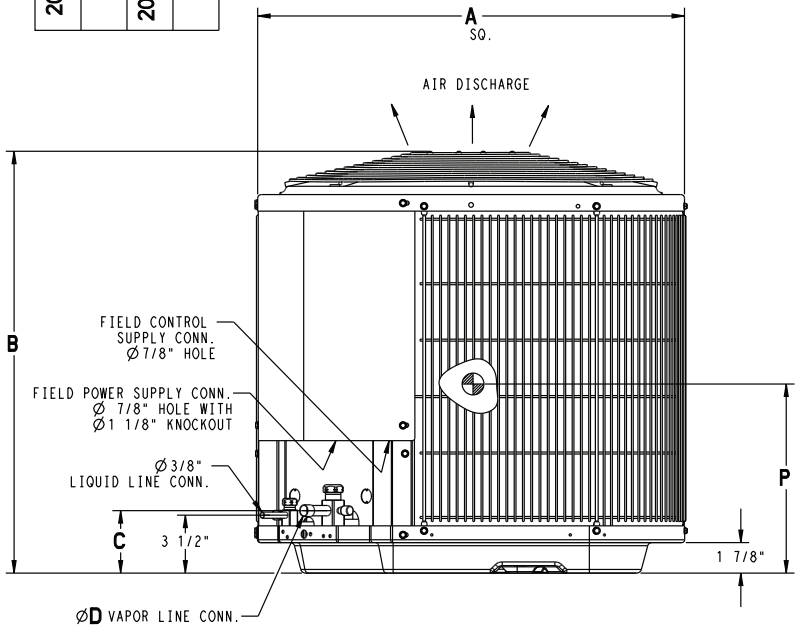

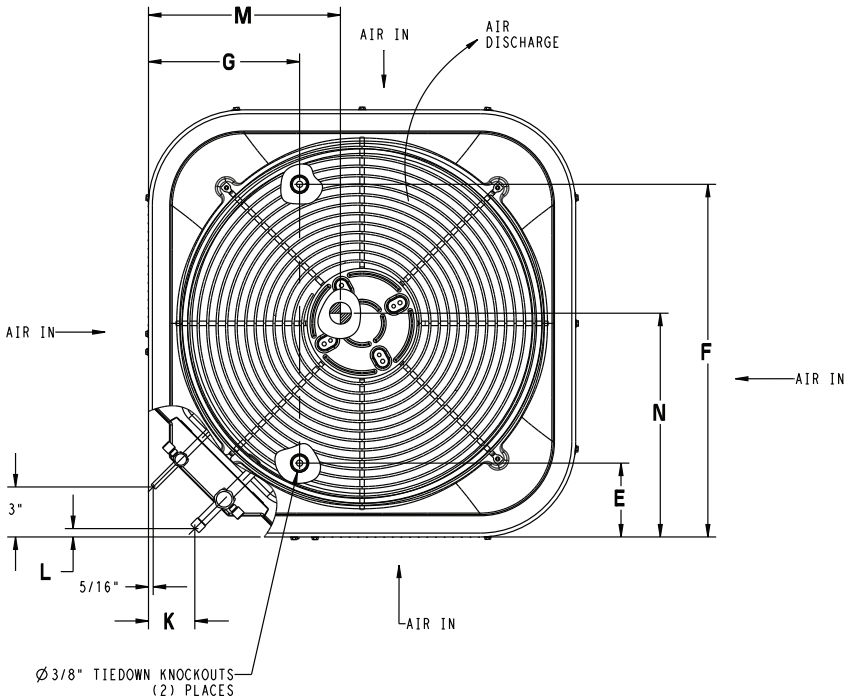

UNIT SIZE	MINIMUM MOUNTING PAD DIMENSIONS
18	26" X 26"
24,30	31 1/2" X 31 1/2"
36, 48, 49, 60, 61	35" X 35"

DIMENSIONS - SI

UNIT	SERIES	ELECTRICAL CHARACTERISTICS				A	B	C	D	E	F	G	K	L	M	N	P	OPERATING WEIGHT (Kgs)	SHIPPING WEIGHT (Kgs)	SHIPPING DIMENSIONS (L x W x H)
24ABC618	0	X	O	O	O	587.3	728.7	95.2	19.0	112.7	458.8	198.4	71.4	12.7	330.2	304.8	330.2	53.4	64.0	616.0 X 695.3 X 827.1
24ABC624	0	X	O	O	O	792.2	719.2	95.2	19.0	166.7	627.1	231.8	71.4	12.7	406.4	406.4	330.2	66.5	82.8	822.3 X 901.7 X 827.1
24ABC630	0	X	O	O	O	792.2	820.8	95.2	19.0	166.7	627.1	231.8	71.4	12.7	393.7	406.4	362.0	69.3	85.2	822.3 X 901.7 X 912.8
24ABC636	0	X	O	O	O	889.0	719.2	98.6	22.2	166.7	722.3	231.8	74.6	15.9	406.4	406.4	330.2	74.8	92.5	917.6 X 998.6 X 827.1
24ABC642	0	X	O	O	O	889.0	993.8	98.6	22.2	166.7	722.3	231.8	74.6	15.9	419.1	444.5	444.5	96.4	115.2	917.6 X 998.6 X 1085.8
24ABC648	0	X	O	O	O	889.0	820.8	98.6	22.2	166.7	722.3	231.8	74.6	15.9	431.8	444.5	362.0	104.8	124.3	917.6 X 998.6 X 912.8
24ABC660	0	X	O	O	O	889.0	1166.8	98.6	22.2	166.7	722.3	231.8	74.6	15.9	419.1	431.8	412.8	123.4	140.6	917.6 X 998.6 X 1258.9
24ABC618	1	X	O	O	O	654.0	728.7	95.2	19.0	112.7	539.8	198.4	71.4	12.7	346.1	342.9	323.9	56.7	69.9	682.6 X 763.6 X 827.1
24ABC661	0	X	O	O	O	889.0	1166.8	98.6	22.2	166.7	722.3	231.8	74.6	15.9	419.1	431.8	412.8	123.4	140.6	917.6 X 998.6 X 1258.9
24ABC648	1	X	O	O	O	889.0	993.8	98.6	22.2	166.7	722.3	231.8	74.6	15.9	444.5	419.1	381.0	119.7	143.8	917.6 X 998.6 X 1085.8
24ABC649	0	X	O	O	O	889.0	993.8	98.6	22.2	166.7	722.3	231.8	74.6	15.9	444.5	419.1	381.0	104.8	122.0	917.6 X 998.6 X 1085.8
		208-230-1-60	230-1-60	208/230-3-60	460-3-60															

X = YES
O = NO

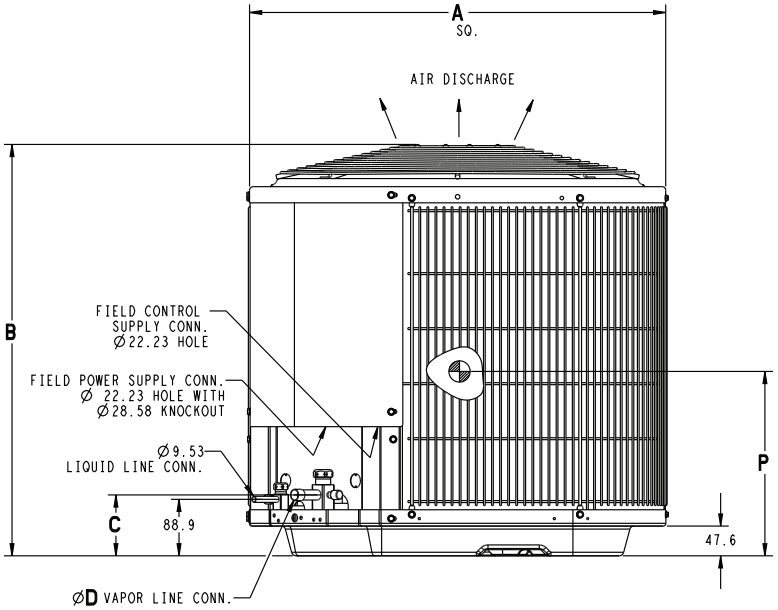

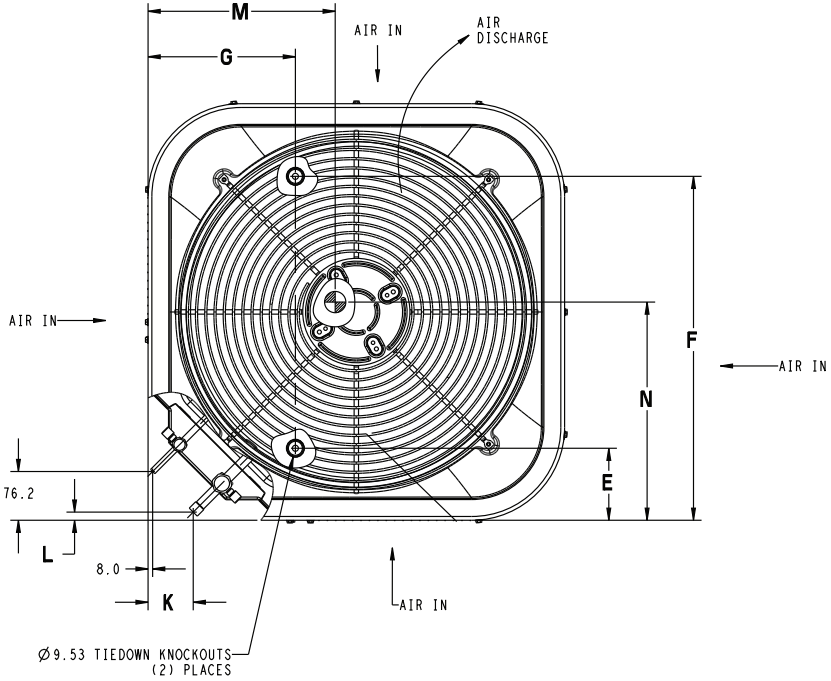

UNIT SIZE	MINIMUM MOUNTING PAD DIMENSIONS
18	660.4 X 660.4
24,30	800.1 X 800.1
36, 48, 49, 60, 61	889.0 X 889.0

CLEARANCES

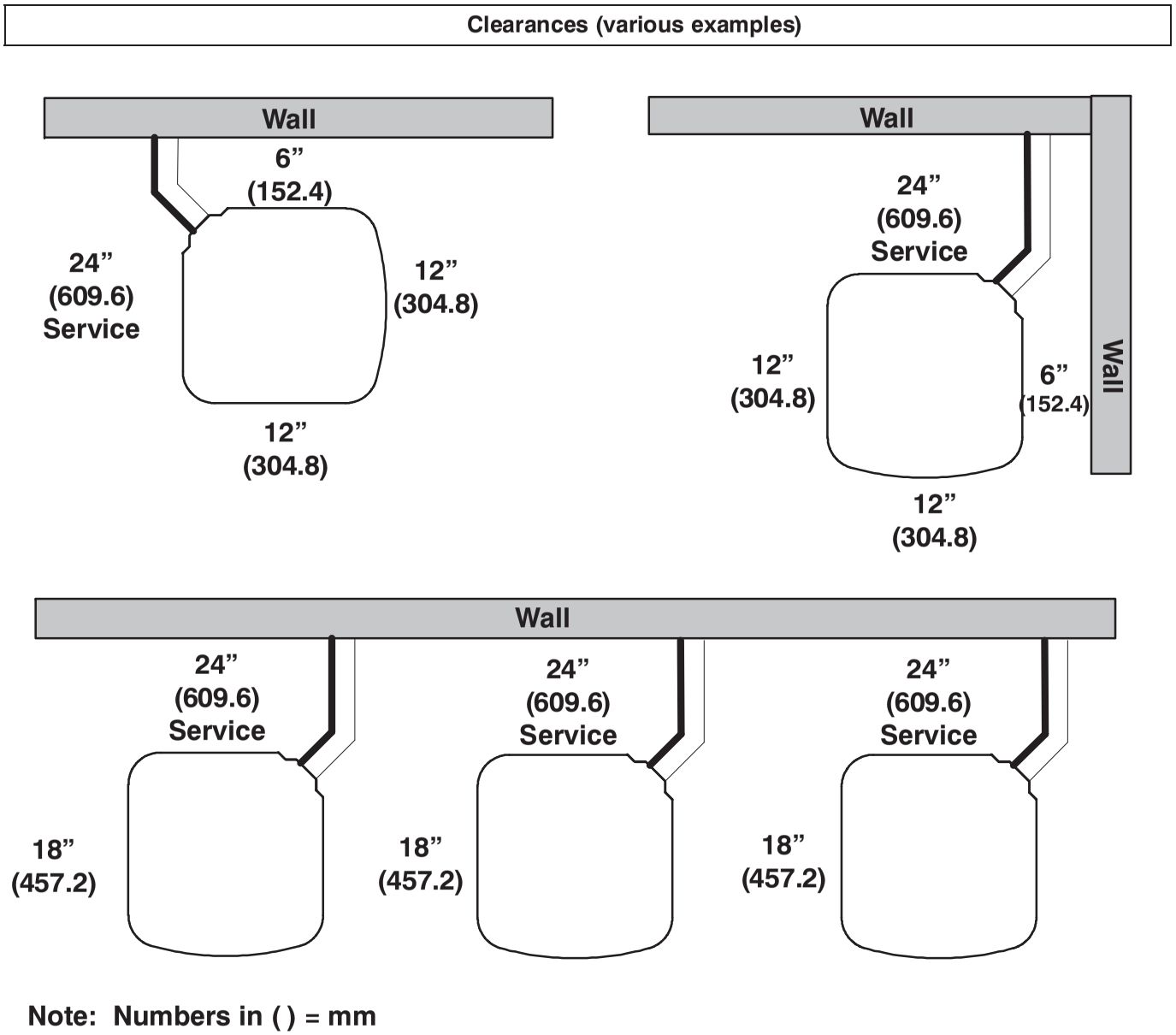

IMPORTANT: When installing multiple units in an alcove, roof well, or partially enclosed area, ensure there is adequate ventilation to prevent re-circulation of discharge air.

COMBINATION RATINGS

AHRI Ref. No.	Model Number	Indoor Model	Furnace Model	Capacity	EER	SEER
3632294	24ABC618A**31	†CNPV*1917A**+TDR		18,000	12.0	14.5
3630458	24ABC618A**31	CAP**1814A**	58CV(A,X)070−12	18,000	12.5	15.5
3631465	24ABC618A**31	CAP**1814A**	58PH*045−08	18,000	13.0	15.5
3631699	24ABC618A**31	CAP**1814A**+TDR		18,000	11.5	13.5
3630459	24ABC618A**31	CAP**2414A**	58CV(A,X)070−12	18,000	13.0	16.0
3631466	24ABC618A**31	CAP**2414A**	58PH*045−08	18,000	13.0	16.0
3631700	24ABC618A**31	CAP**2414A**+TDR		18,000	11.5	14.0
3630460	24ABC618A**31	CAP**2417A**	58CV(A,X)070−12	18,000	13.0	16.0
3630520	24ABC618A**31	CAP**2417A**	58CV(A,X)090−16	18,000	13.0	16.0
3630806	24ABC618A**31	CAP**2417A**	58ME(B,C)040−12	18,000	13.0	16.0
3630872	24ABC618A**31	CAP**2417A**	58ME(B,C)060−12	18,000	13.0	16.0
3631136	24ABC618A**31	CAP**2417A**	58MV(B,C)060−14	18,000	13.0	16.0
3631467	24ABC618A**31	CAP**2417A**	58PH*045−08	18,000	13.0	16.0
3631926	24ABC618A**31	CAP**2417A**	58UVB060−14	18,000	13.0	16.0
3644907	24ABC618A**31	CAP**2417A**	58VLR105−12	18,000	13.0	16.0
3644906	24ABC618A**31	CAP**2417A**	58VMR105−12	18,000	13.0	16.0
4137516	24ABC618A**31	CAP**2417A**	OVLAAB036098	18,000	13.0	16.0
4137515	24ABC618A**31	CAP**2417A**	OVMAAB036098	18,000	13.0	16.0
3631701	24ABC618A**31	CAP**2417A**+TDR		18,000	11.5	14.0
3901699	24ABC618A**31	CAP**3014A**	58CV(A,X)070−12	18,000	13.0	16.0
3901700	24ABC618A**31	CAP**3014A**	58PH*045−08	18,000	13.0	16.0
3901698	24ABC618A**31	CAP**3014A**+TDR		18,000	12.0	14.0
3901703	24ABC618A**31	CAP**3017A**	58CV(A,X)090−16	18,000	13.0	16.0
3901705	24ABC618A**31	CAP**3017A**	58ME(B,C)060−12	18,000	13.0	16.0
3901704	24ABC618A**31	CAP**3017A**	58MEB040−12	18,000	13.0	16.0
3901702	24ABC618A**31	CAP**3017A**	58MV(B,C)060−14	18,000	13.0	16.0
3901707	24ABC618A**31	CAP**3017A**	58VLR105−12	18,000	13.0	16.0
3901706	24ABC618A**31	CAP**3017A**	58VMR105−12	18,000	13.0	16.0
3901701	24ABC618A**31	CAP**3017A**+TDR		18,000	12.0	14.0
3901709	24ABC618A**31	CAP**3614A**	58CV(A,X)070−12	18,000	13.0	16.0
3901710	24ABC618A**31	CAP**3614A**	58PH*045−08	18,000	13.0	16.0
3901708	24ABC618A**31	CAP**3614A**+TDR		18,000	12.0	14.5
3901713	24ABC618A**31	CAP**3617A**	58CV(A,X)090−16	18,000	13.0	16.0
3901715	24ABC618A**31	CAP**3617A**	58ME(B,C)060−12	18,000	13.0	16.0
3901714	24ABC618A**31	CAP**3617A**	58MEB040−12	18,000	13.0	16.0
3901712	24ABC618A**31	CAP**3617A**	58MV(B,C)060−14	18,000	13.0	16.0
3901717	24ABC618A**31	CAP**3617A**	58VLR105−12	18,000	13.0	16.0
3901716	24ABC618A**31	CAP**3617A**	58VMR105−12	18,000	13.0	16.0
3901711	24ABC618A**31	CAP**3617A**+TDR		18,000	12.0	14.5
3901718	24ABC618A**31	CAP**3619A**+TDR		18,000	12.0	14.5
3901720	24ABC618A**31	CAP**3621A**	58MV(B,C)080−14	18,000	13.0	16.0
4141760	24ABC618A**31	CAP**3621A**	58UVB080−14	18,000	13.0	16.0
3901719	24ABC618A**31	CAP**3621A**+TDR		18,000	12.0	14.5
3630464	24ABC618A**31	CNPH*2417A**	58CV(A,X)070−12	18,000	13.0	16.0
3630522	24ABC618A**31	CNPH*2417A**	58CV(A,X)090−16	18,000	13.0	16.0
4137523	24ABC618A**31	CNPH*2417A**	58HDV040−−12	18,400	13.0	15.5
4137524	24ABC618A**31	CNPH*2417A**	58HDV060−−12	18,400	13.0	15.5
3630808	24ABC618A**31	CNPH*2417A**	58ME(B,C)040−12	18,000	13.0	16.0
3630874	24ABC618A**31	CNPH*2417A**	58ME(B,C)060−12	18,000	13.0	16.0
3631138	24ABC618A**31	CNPH*2417A**	58MV(B,C)060−14	18,000	13.0	16.0
3631202	24ABC618A**31	CNPH*2417A**	58MV(B,C)080−14	18,000	13.0	16.0
3631429	24ABC618A**31	CNPH*2417A**	58MVB040−14	18,000	13.0	16.0
3631471	24ABC618A**31	CNPH*2417A**	58PH*045−08	18,000	13.0	16.0
3644913	24ABC618A**31	CNPH*2417A**	58VLR105−12	18,000	13.0	16.0
3644912	24ABC618A**31	CNPH*2417A**	58VMR105−12	18,000	13.0	16.0
4137526	24ABC618A**31	CNPH*2417A**	OVLAAB036098	18,400	13.0	16.0
4137525	24ABC618A**31	CNPH*2417A**	OVMAAB036098	18,400	13.0	16.0
3631705	24ABC618A**31	CNPH*2417A**+TDR		18,000	12.0	14.5
3630461	24ABC618A**31	CNPV*1814A**	58CV(A,X)070−12	18,000	13.0	15.5
3631468	24ABC618A**31	CNPV*1814A**	58PH*045−08	18,000	13.0	15.5
3631702	24ABC618A**31	CNPV*1814A**+TDR		18,000	11.5	14.0
3632247	24ABC618A**31	CNPV*1917A**	58CV(A,X)070−12	18,000	13.0	16.0
3632250	24ABC618A**31	CNPV*1917A**	58CV(A,X)090−16	18,000	13.0	16.0
4137517	24ABC618A**31	CNPV*1917A**	58HDV040−−12	18,600	13.0	16.0
3632259	24ABC618A**31	CNPV*1917A**	58ME(B,C)040−12	18,000	13.0	16.0
3632262	24ABC618A**31	CNPV*1917A**	58ME(B,C)060−12	18,000	13.0	16.0
3632272	24ABC618A**31	CNPV*1917A**	58MV(B,C)060−14	18,000	13.0	16.0
3632285	24ABC618A**31	CNPV*1917A**	58PH*045−08	18,000	13.0	16.0
3632316	24ABC618A**31	CNPV*1917A**	58UVB060−14	18,000	13.0	16.0
3644909	24ABC618A**31	CNPV*1917A**	58VLR105−12	18,000	13.0	16.0
3644908	24ABC618A**31	CNPV*1917A**	58VMR105−12	18,000	13.0	16.0
4137519	24ABC618A**31	CNPV*1917A**	OVLAAB036098	18,400	13.0	16.0
4137518	24ABC618A**31	CNPV*1917A**	OVMAAB036098	18,400	13.0	16.0

See notes on page 52

COMBINATION RATINGS

AHRI Ref. No.	Model Number	Indoor Model	Furnace Model	Capacity	EER	SEER
3630462	24ABC618A**31	CNPV*2414A**	58CV(A,X)070−12	18,000	13.0	16.0
3631469	24ABC618A**31	CNPV*2414A**	58PH*045−08	18,000	13.0	16.0
3631703	24ABC618A**31	CNPV*2414A**+TDR		18,000	11.5	14.0
3630463	24ABC618A**31	CNPV*2417A**	58CV(A,X)070−12	18,000	13.0	16.0
3630521	24ABC618A**31	CNPV*2417A**	58CV(A,X)090−16	18,000	13.0	16.0
4137520	24ABC618A**31	CNPV*2417A**	58HDV040−−12	18,400	13.0	15.5
4137529	24ABC618A**31	CNPV*2417A**	58HDV060−−12	18,000	13.0	15.5
3630807	24ABC618A**31	CNPV*2417A**	58ME(B,C)040−12	18,000	13.0	16.0
3630873	24ABC618A**31	CNPV*2417A**	58ME(B,C)060−12	18,000	13.0	16.0
3631137	24ABC618A**31	CNPV*2417A**	58MV(B,C)060−14	18,000	13.0	16.0
3631470	24ABC618A**31	CNPV*2417A**	58PH*045−08	18,000	13.0	16.0
3631927	24ABC618A**31	CNPV*2417A**	58UVB060−14	18,000	13.0	16.0
3644911	24ABC618A**31	CNPV*2417A**	58VLR105−12	18,000	13.0	16.0
3644910	24ABC618A**31	CNPV*2417A**	58VMR105−12	18,000	13.0	16.0
4137522	24ABC618A**31	CNPV*2417A**	OVLAAB036098	18,400	13.0	16.0
4137521	24ABC618A**31	CNPV*2417A**	OVMAAB036098	18,400	13.0	16.0
3631704	24ABC618A**31	CNPV*2417A**+TDR		18,000	11.5	14.0
3630465	24ABC618A**31	CSPH*2412A**	58CV(A,X)070−12	18,000	13.0	16.0
3630523	24ABC618A**31	CSPH*2412A**	58CV(A,X)090−16	18,000	13.0	16.0
3630768	24ABC618A**31	CSPH*2412A**	58HDV040−−12	18,000	13.0	15.5
3630777	24ABC618A**31	CSPH*2412A**	58HDV060−−12	18,000	13.0	15.5
3630809	24ABC618A**31	CSPH*2412A**	58ME(B,C)040−12	18,000	13.0	16.0
3630875	24ABC618A**31	CSPH*2412A**	58ME(B,C)060−12	18,000	13.0	16.0
3631139	24ABC618A**31	CSPH*2412A**	58MV(B,C)060−14	18,000	13.0	16.0
3631203	24ABC618A**31	CSPH*2412A**	58MV(B,C)080−14	18,000	13.0	16.0
3631430	24ABC618A**31	CSPH*2412A**	58MVB040−14	18,000	13.0	16.0
3631472	24ABC618A**31	CSPH*2412A**	58PH*045−08	18,000	13.0	16.0
3644915	24ABC618A**31	CSPH*2412A**	58VLR105−12	18,000	13.0	16.0
3644914	24ABC618A**31	CSPH*2412A**	58VMR105−12	18,000	13.0	16.0
4137528	24ABC618A**31	CSPH*2412A**	OVLAAB036098	18,400	13.0	16.0
4137527	24ABC618A**31	CSPH*2412A**	OVMAAB036098	18,400	13.0	16.0
3631707	24ABC618A**31	CSPH*2412A**+TDR		18,000	12.0	14.0
3804392	24ABC618A**31	FB4CNF018		18,000	12.5	14.5
3693276	24ABC618A**31	FB4CNF018+TXV		18,000	13.0	15.5
3804393	24ABC618A**31	FB4CNF024		18,000	12.5	14.5
3693277	24ABC618A**31	FB4CNF024+TXV		18,000	13.0	15.5
3631720	24ABC618A**31	FE4ANF002+UI		18,000	13.0	16.0
3631750	24ABC618A**31	FF1ENP018		18,000	11.5	14.0
3631751	24ABC618A**31	FF1ENP019		18,000	12.5	15.5
3631752	24ABC618A**31	FF1ENP024		18,000	11.5	14.0
3631754	24ABC618A**31	FF1ENP025		18,000	13.0	16.0
3631816	24ABC618A**31	FV4CNF002		18,000	13.0	16.0
3632311	24ABC618A**31	FX4DNF019		18,000	13.0	16.0
3632312	24ABC618A**31	FX4DNF025		18,000	13.0	16.0
3804394	24ABC618A**31	FY5BNF018		18,000	12.0	14.0
3693289	24ABC618A**31	FY5BNF018+TXV		18,000	12.0	14.5
3804395	24ABC618A**31	FY5BNF024		18,000	12.0	14.0
3693290	24ABC618A**31	FY5BNF024+TXV		18,000	12.0	14.5
3631725	24ABC624A**30	†CNPV*3117A**+TDR		23,600	12.0	14.5
3630467	24ABC624A**30	CAP**2414A**	58CV(A,X)070−12	22,800	12.5	15.5
3631474	24ABC624A**30	CAP**2414A**	58PH*045−08	23,000	12.5	15.5
4744653	24ABC624A**30	CAP**2414A**	59*P5A040E14**10	24,000	12.0	14.5
3631726	24ABC624A**30	CAP**2414A**+TDR		23,000	11.5	14.0
3630468	24ABC624A**30	CAP**2417A**	58CV(A,X)070−12	22,800	12.5	15.5
3630525	24ABC624A**30	CAP**2417A**	58CV(A,X)090−16	22,800	13.0	16.0
3630811	24ABC624A**30	CAP**2417A**	58ME(B,C)040−12	23,400	13.0	16.0
3630877	24ABC624A**30	CAP**2417A**	58ME(B,C)060−12	23,400	13.0	16.0
3630939	24ABC624A**30	CAP**2417A**	58ME(B,C)080−12	23,200	13.0	16.0
3631141	24ABC624A**30	CAP**2417A**	58MV(B,C)060−14	23,200	13.0	16.0
3631475	24ABC624A**30	CAP**2417A**	58PH*045−08	23,000	12.5	15.5
3631931	24ABC624A**30	CAP**2417A**	58UVB060−14	23,200	13.0	16.0
3644917	24ABC624A**30	CAP**2417A**	58VLR105−12	24,000	13.0	16.0
3644916	24ABC624A**30	CAP**2417A**	58VMR105−12	23,800	13.0	16.0
4744654	24ABC624A**30	CAP**2417A**	59*N*A060V17**14	24,000	12.7	15.5
4744655	24ABC624A**30	CAP**2417A**	59*N*A080V17**14	23,800	13.0	16.0
4744656	24ABC624A**30	CAP**2417A**	59*P5A040E14**10	24,000	12.0	14.5
4744657	24ABC624A**30	CAP**2417A**	59*P5A060E17**14	24,000	13.0	16.0
4255254	24ABC624A**30	CAP**2417A**	OVLAAB036098	24,000	13.0	15.5
4137530	24ABC624A**30	CAP**2417A**	OVMAAB036098	24,000	13.0	15.5
3631727	24ABC624A**30	CAP**2417A**+TDR		23,000	11.5	14.0
3630469	24ABC624A**30	CAP**3014A**	58CV(A,X)070−12	22,800	13.0	16.0
3631476	24ABC624A**30	CAP**3014A**	58PH*045−08	23,200	12.5	15.5

See notes on page 52

COMBINATION RATINGS

AHRI Ref. No.	Model Number	Indoor Model	Furnace Model	Capacity	EER	SEER
4744658	24ABC624A**30	CAP**3014A**	59*P5A040E14**10	24,000	12.0	14.5
3631728	24ABC624A**30	CAP**3014A**+TDR		23,200	11.5	14.0
3630470	24ABC624A**30	CAP**3017A**	58CV(A,X)070−12	23,000	13.0	16.0
3630526	24ABC624A**30	CAP**3017A**	58CV(A,X)090−16	23,000	13.0	16.0
3630812	24ABC624A**30	CAP**3017A**	58ME(B,C)040−12	23,600	13.0	16.0
3630878	24ABC624A**30	CAP**3017A**	58ME(B,C)060−12	23,600	13.0	16.0
3630940	24ABC624A**30	CAP**3017A**	58ME(B,C)080−12	23,400	13.0	16.0
3631142	24ABC624A**30	CAP**3017A**	58MV(B,C)060−14	23,200	13.0	16.0
3631477	24ABC624A**30	CAP**3017A**	58PH*045−08	23,200	13.0	16.0
3631932	24ABC624A**30	CAP**3017A**	58UVB060−14	23,200	13.0	16.0
3644919	24ABC624A**30	CAP**3017A**	58VLR105−12	24,000	13.0	16.0
3644918	24ABC624A**30	CAP**3017A**	58VMR105−12	23,800	13.0	16.0
4744659	24ABC624A**30	CAP**3017A**	59*N*A060V17**14	24,000	13.0	16.0
4744660	24ABC624A**30	CAP**3017A**	59*N*A080V17**14	24,000	13.0	16.0
4744661	24ABC624A**30	CAP**3017A**	59*P5A040E14**10	24,000	12.0	14.5
4744662	24ABC624A**30	CAP**3017A**	59*P5A060E17**14	24,000	13.0	16.0
4255255	24ABC624A**30	CAP**3017A**	OVLAAB036098	24,000	13.0	16.0
4137532	24ABC624A**30	CAP**3017A**	OVMAAB036098	24,000	13.0	15.5
3631729	24ABC624A**30	CAP**3017A**+TDR		23,200	11.5	14.0
3630471	24ABC624A**30	CAP**3614A**	58CV(A,X)070−12	23,000	13.0	16.0
3631478	24ABC624A**30	CAP**3614A**	58PH*045−08	23,200	13.0	16.0
3631730	24ABC624A**30	CAP**3614A**+TDR		23,200	11.5	14.0
3630472	24ABC624A**30	CAP**3617A**	58CV(A,X)070−12	23,000	13.0	16.0
3630527	24ABC624A**30	CAP**3617A**	58CV(A,X)090−16	23,000	13.0	16.0
3630813	24ABC624A**30	CAP**3617A**	58ME(B,C)040−12	23,600	13.0	16.0
3630879	24ABC624A**30	CAP**3617A**	58ME(B,C)060−12	23,800	13.0	16.0
3630941	24ABC624A**30	CAP**3617A**	58ME(B,C)080−12	23,600	13.0	16.0
3631143	24ABC624A**30	CAP**3617A**	58MV(B,C)060−14	23,400	13.0	16.0
3631479	24ABC624A**30	CAP**3617A**	58PH*045−08	23,400	13.0	16.0
3631933	24ABC624A**30	CAP**3617A**	58UVB060−14	23,400	13.0	16.0
3644921	24ABC624A**30	CAP**3617A**	58VLR105−12	24,000	13.0	16.0
3644920	24ABC624A**30	CAP**3617A**	58VMR105−12	24,000	13.0	16.0
3631731	24ABC624A**30	CAP**3617A**+TDR		23,200	11.5	14.0
3630769	24ABC624A**30	CAP**3619A**	58HDV040−−12	23,400	12.5	15.5
3630778	24ABC624A**30	CAP**3619A**	58HDV060−−12	23,600	12.5	15.5
3631733	24ABC624A**30	CAP**3619A**+TDR		23,200	11.5	14.0
3630528	24ABC624A**30	CAP**3621A**	58CV(A,X)090−16	23,000	13.0	16.0
3630595	24ABC624A**30	CAP**3621A**	58CV(A,X)110−20	23,200	13.0	16.0
3630814	24ABC624A**30	CAP**3621A**	58ME(B,C)040−12	23,800	13.0	16.0
3630880	24ABC624A**30	CAP**3621A**	58ME(B,C)060−12	23,800	13.0	16.0
3630942	24ABC624A**30	CAP**3621A**	58ME(B,C)080−12	23,600	13.0	16.0
3631144	24ABC624A**30	CAP**3621A**	58MV(B,C)060−14	23,400	13.0	16.0
3631204	24ABC624A**30	CAP**3621A**	58MV(B,C)080−14	23,000	13.0	16.0
3631255	24ABC624A**30	CAP**3621A**	58MV(B,C)080−20	22,800	13.0	16.0
3631319	24ABC624A**30	CAP**3621A**	58MV(B,C)100−20	23,000	13.0	16.0
3631934	24ABC624A**30	CAP**3621A**	58UVB060−14	23,400	13.0	16.0
3631994	24ABC624A**30	CAP**3621A**	58UVB080−14	23,000	13.0	16.0
3632046	24ABC624A**30	CAP**3621A**	58UVB080−20	22,800	13.0	16.0
3632110	24ABC624A**30	CAP**3621A**	58UVB100−20	23,000	13.0	16.0
3644923	24ABC624A**30	CAP**3621A**	58VLR105−12	24,000	13.0	16.0
3644922	24ABC624A**30	CAP**3621A**	58VMR105−12	24,000	13.0	16.0
3631732	24ABC624A**30	CAP**3621A**+TDR		23,200	11.5	14.0
3901725	24ABC624A**30	CAP**4221A**	58CV(A,X)110−20	24,000	13.0	16.0
3901722	24ABC624A**30	CAP**4221A**	58MV(B,C)080−14	24,000	13.0	16.0
3901723	24ABC624A**30	CAP**4221A**	58MV(B,C)080−20	24,000	13.0	16.0
3901724	24ABC624A**30	CAP**4221A**	58MV(B,C)100−20	24,000	13.0	16.0
4141761	24ABC624A**30	CAP**4221A**	58UVB080−14	24,000	13.0	16.0
4141762	24ABC624A**30	CAP**4221A**	58UVB080−20	24,000	13.0	16.0
4141763	24ABC624A**30	CAP**4221A**	58UVB100−20	24,000	13.0	16.0
3901721	24ABC624A**30	CAP**4221A**+TDR		24,000	12.0	14.5
3901729	24ABC624A**30	CAP**4224A**	58CV(A,X)135−22	24,000	13.0	16.0
3901730	24ABC624A**30	CAP**4224A**	58CV(A,X)155−22	24,000	13.0	16.0
3901728	24ABC624A**30	CAP**4224A**	58MV(B,C)120−20	24,000	13.0	16.0
3901727	24ABC624A**30	CAP**4224A**	58MVB040−14	24,000	13.0	16.0
4141764	24ABC624A**30	CAP**4224A**	58UVB120−20	24,000	13.0	16.0
3901726	24ABC624A**30	CAP**4224A**+TDR		24,000	12.0	14.5
3630478	24ABC624A**30	CNPH*2417A**	58CV(A,X)070−12	22,800	12.5	15.5
3630533	24ABC624A**30	CNPH*2417A**	58CV(A,X)090−16	22,800	13.0	16.0
3630597	24ABC624A**30	CNPH*2417A**	58CV(A,X)110−20	22,800	12.5	15.5
3630666	24ABC624A**30	CNPH*2417A**	58CV(A,X)135−22	22,800	12.5	15.5
3630717	24ABC624A**30	CNPH*2417A**	58CV(A,X)155−22	22,800	12.5	15.5
4137534	24ABC624A**30	CNPH*2417A**	58HDV040−−12	23,400	12.5	15.5
4137535	24ABC624A**30	CNPH*2417A**	58HDV060−−12	23,400	12.5	15.5

See notes on page 52

COMBINATION RATINGS

AHRI Ref. No.	Model Number	Indoor Model	Furnace Model	Capacity	EER	SEER
4137536	24ABC624A**30	CNPH*2417A**	58HDV080−−20	23,400	12.5	15.5
4137537	24ABC624A**30	CNPH*2417A**	58HDV100−−20	23,400	12.5	15.5
3630819	24ABC624A**30	CNPH*2417A**	58ME(B,C)040−12	23,200	13.0	16.0
3630885	24ABC624A**30	CNPH*2417A**	58ME(B,C)060−12	23,200	13.0	16.0
3630947	24ABC624A**30	CNPH*2417A**	58ME(B,C)080−12	23,000	13.0	16.0
3631149	24ABC624A**30	CNPH*2417A**	58MV(B,C)060−14	23,000	12.5	15.5
3631206	24ABC624A**30	CNPH*2417A**	58MV(B,C)080−14	22,800	12.5	15.5
3631257	24ABC624A**30	CNPH*2417A**	58MV(B,C)080−20	22,600	12.5	15.5
3631321	24ABC624A**30	CNPH*2417A**	58MV(B,C)100−20	22,800	12.5	15.5
3631383	24ABC624A**30	CNPH*2417A**	58MV(B,C)120−20	23,000	13.0	16.0
3631431	24ABC624A**30	CNPH*2417A**	58MVB040−14	22,800	12.5	15.5
3631485	24ABC624A**30	CNPH*2417A**	58PH*045−08	23,000	12.5	15.5
3644935	24ABC624A**30	CNPH*2417A**	58VLR105−12	24,000	13.0	16.0
3644934	24ABC624A**30	CNPH*2417A**	58VMR105−12	23,800	13.0	15.5
4744677	24ABC624A**30	CNPH*2417A**	59*N*A060V17**14	24,000	12.7	15.5
4744678	24ABC624A**30	CNPH*2417A**	59*N*A080V17**14	23,800	12.7	15.5
4744679	24ABC624A**30	CNPH*2417A**	59*N*A100V21**20	24,000	13.0	16.0
4744680	24ABC624A**30	CNPH*2417A**	59*N*A120V24**22	24,000	13.0	16.0
4744681	24ABC624A**30	CNPH*2417A**	59*P5A040E14**10	24,000	12.0	14.5
4744682	24ABC624A**30	CNPH*2417A**	59*P5A060E17**14	24,000	12.7	15.5
4137561	24ABC624A**30	CNPH*2417A**	OVLAAB036098	23,400	12.5	15.5
4137560	24ABC624A**30	CNPH*2417A**	OVMAAB036098	23,400	12.5	15.5
4137562	24ABC624A**30	CNPH*2417A**	OVMAAB042112	23,400	13.0	16.0
3631740	24ABC624A**30	CNPH*2417A**+TDR		23,000	11.5	14.0
3630479	24ABC624A**30	CNPH*3017A**	58CV(A,X)070−12	23,000	13.0	16.0
3630534	24ABC624A**30	CNPH*3017A**	58CV(A,X)090−16	23,000	13.0	16.0
3630598	24ABC624A**30	CNPH*3017A**	58CV(A,X)110−20	23,000	13.0	16.0
3630667	24ABC624A**30	CNPH*3017A**	58CV(A,X)135−22	23,000	13.0	16.0
3630718	24ABC624A**30	CNPH*3017A**	58CV(A,X)155−22	23,000	13.0	16.0
4137538	24ABC624A**30	CNPH*3017A**	58HDV040−−12	23,600	12.5	15.5
4137539	24ABC624A**30	CNPH*3017A**	58HDV060−−12	23,600	12.5	15.5
4137540	24ABC624A**30	CNPH*3017A**	58HDV080−−20	23,600	13.0	16.0
4137541	24ABC624A**30	CNPH*3017A**	58HDV100−−20	23,600	13.0	16.0
3630820	24ABC624A**30	CNPH*3017A**	58ME(B,C)040−12	23,600	13.0	16.0
3630886	24ABC624A**30	CNPH*3017A**	58ME(B,C)060−12	23,600	13.0	16.0
3630948	24ABC624A**30	CNPH*3017A**	58ME(B,C)080−12	23,400	13.0	16.0
3631150	24ABC624A**30	CNPH*3017A**	58MV(B,C)060−14	23,200	13.0	16.0
3631207	24ABC624A**30	CNPH*3017A**	58MV(B,C)080−14	23,000	13.0	16.0
3631258	24ABC624A**30	CNPH*3017A**	58MV(B,C)080−20	22,800	13.0	16.0
3631322	24ABC624A**30	CNPH*3017A**	58MV(B,C)100−20	23,000	13.0	16.0
3631384	24ABC624A**30	CNPH*3017A**	58MV(B,C)120−20	23,200	13.0	16.0
3631432	24ABC624A**30	CNPH*3017A**	58MVB040−14	23,000	13.0	16.0
3631486	24ABC624A**30	CNPH*3017A**	58PH*045−08	23,200	13.0	16.0
3644937	24ABC624A**30	CNPH*3017A**	58VLR105−12	24,000	13.0	16.0
3644936	24ABC624A**30	CNPH*3017A**	58VMR105−12	24,000	13.0	16.0
4744683	24ABC624A**30	CNPH*3017A**	59*N*A060V17**14	24,000	13.0	16.0
4744684	24ABC624A**30	CNPH*3017A**	59*N*A080V17**14	24,000	13.0	16.0
4744685	24ABC624A**30	CNPH*3017A**	59*N*A100V21**20	24,000	13.0	16.0
4744686	24ABC624A**30	CNPH*3017A**	59*N*A120V24**22	24,000	13.0	16.0
4744687	24ABC624A**30	CNPH*3017A**	59*P5A040E14**10	24,000	12.0	14.5
4744688	24ABC624A**30	CNPH*3017A**	59*P5A060E17**14	24,000	13.0	16.0
4137564	24ABC624A**30	CNPH*3017A**	OVLAAB036098	23,600	13.0	16.0
4137563	24ABC624A**30	CNPH*3017A**	OVMAAB036098	23,600	13.0	16.0
4137565	24ABC624A**30	CNPH*3017A**	OVMAAB042112	23,600	13.0	16.0
3631741	24ABC624A**30	CNPH*3017A**+TDR		23,200	11.5	14.0
3630480	24ABC624A**30	CNPH*3117A**	58CV(A,X)070−12	23,400	13.0	16.0
3630535	24ABC624A**30	CNPH*3117A**	58CV(A,X)090−16	23,400	13.0	16.0
3630599	24ABC624A**30	CNPH*3117A**	58CV(A,X)110−20	23,400	13.0	16.0
3630668	24ABC624A**30	CNPH*3117A**	58CV(A,X)135−22	23,400	13.0	16.0
3630719	24ABC624A**30	CNPH*3117A**	58CV(A,X)155−22	23,400	13.0	16.0
4137542	24ABC624A**30	CNPH*3117A**	58HDV040−−12	23,600	13.0	16.0
4137543	24ABC624A**30	CNPH*3117A**	58HDV060−−12	23,600	13.0	16.0
4137544	24ABC624A**30	CNPH*3117A**	58HDV080−−20	23,600	13.0	16.0
4137545	24ABC624A**30	CNPH*3117A**	58HDV100−−20	23,600	13.0	16.0
3630821	24ABC624A**30	CNPH*3117A**	58ME(B,C)040−12	24,000	13.0	16.0
3630887	24ABC624A**30	CNPH*3117A**	58ME(B,C)060−12	24,000	13.0	16.0
3630949	24ABC624A**30	CNPH*3117A**	58ME(B,C)080−12	24,000	13.0	16.0
3631151	24ABC624A**30	CNPH*3117A**	58MV(B,C)060−14	23,800	13.0	16.0
3631208	24ABC624A**30	CNPH*3117A**	58MV(B,C)080−14	23,400	13.0	16.0
3631259	24ABC624A**30	CNPH*3117A**	58MV(B,C)080−20	23,200	13.0	16.0
3631323	24ABC624A**30	CNPH*3117A**	58MV(B,C)100−20	23,400	13.0	16.0
3631385	24ABC624A**30	CNPH*3117A**	58MV(B,C)120−20	23,600	13.0	16.0
3631433	24ABC624A**30	CNPH*3117A**	58MVB040−14	23,400	13.0	16.0

See notes on page 52

COMBINATION RATINGS

AHRI Ref. No.	Model Number	Indoor Model	Furnace Model	Capacity	EER	SEER
3631487	24ABC624A**30	CNPH*3117A**	58PH*045−08	23,800	13.0	16.0
3644939	24ABC624A**30	CNPH*3117A**	58VLR105−12	24,000	13.0	16.0
3644938	24ABC624A**30	CNPH*3117A**	58VMR105−12	24,000	13.0	16.0
4744689	24ABC624A**30	CNPH*3117A**	59*N*A060V17**14	24,000	13.0	16.0
4744690	24ABC624A**30	CNPH*3117A**	59*N*A080V17**14	24,000	13.2	16.5
4744691	24ABC624A**30	CNPH*3117A**	59*N*A100V21**20	24,000	13.2	16.5
4744692	24ABC624A**30	CNPH*3117A**	59*N*A120V24**22	24,000	13.2	16.5
4744693	24ABC624A**30	CNPH*3117A**	59*P5A040E14**10	24,000	12.5	15.2
4744694	24ABC624A**30	CNPH*3117A**	59*P5A060E17**14	24,000	13.2	16.5
4137567	24ABC624A**30	CNPH*3117A**	OVLAAB036098	24,000	13.0	16.0
4137566	24ABC624A**30	CNPH*3117A**	OVMAAB036098	24,000	13.0	16.0
4137568	24ABC624A**30	CNPH*3117A**	OVMAAB042112	24,000	13.0	16.0
3632296	24ABC624A**30	CNPH*3117A**+TDR		23,600	12.0	14.5
3630481	24ABC624A**30	CNPH*3617A**	58CV(A,X)070−12	23,000	13.0	16.0
3630536	24ABC624A**30	CNPH*3617A**	58CV(A,X)090−16	23,000	13.0	16.0
3630600	24ABC624A**30	CNPH*3617A**	58CV(A,X)110−20	23,000	13.0	16.0
3630669	24ABC624A**30	CNPH*3617A**	58CV(A,X)135−22	23,000	13.0	16.0
3630720	24ABC624A**30	CNPH*3617A**	58CV(A,X)155−22	23,000	13.0	16.0
3630822	24ABC624A**30	CNPH*3617A**	58ME(B,C)040−12	23,600	13.0	16.0
3630888	24ABC624A**30	CNPH*3617A**	58ME(B,C)060−12	23,600	13.0	16.0
3630950	24ABC624A**30	CNPH*3617A**	58ME(B,C)080−12	23,400	13.0	16.0
3631152	24ABC624A**30	CNPH*3617A**	58MV(B,C)060−14	23,200	13.0	16.0
3631209	24ABC624A**30	CNPH*3617A**	58MV(B,C)080−14	23,000	13.0	16.0
3631260	24ABC624A**30	CNPH*3617A**	58MV(B,C)080−20	22,800	13.0	16.0
3631324	24ABC624A**30	CNPH*3617A**	58MV(B,C)100−20	23,000	13.0	16.0
3631386	24ABC624A**30	CNPH*3617A**	58MV(B,C)120−20	23,200	13.0	16.0
3631434	24ABC624A**30	CNPH*3617A**	58MVB040−14	23,000	13.0	16.0
3631488	24ABC624A**30	CNPH*3617A**	58PH*045−08	23,200	13.0	16.0
3644941	24ABC624A**30	CNPH*3617A**	58VLR105−12	24,000	13.0	16.0
3644940	24ABC624A**30	CNPH*3617A**	58VMR105−12	24,000	13.0	16.0
3631742	24ABC624A**30	CNPH*3617A**+TDR		23,200	11.5	14.0
3632248	24ABC624A**30	CNPV*1917A**	58CV(A,X)070−12	23,000	13.0	16.0
3632251	24ABC624A**30	CNPV*1917A**	58CV(A,X)090−16	23,000	13.0	16.0
3632260	24ABC624A**30	CNPV*1917A**	58ME(B,C)040−12	23,600	13.0	16.0
3632263	24ABC624A**30	CNPV*1917A**	58ME(B,C)060−12	23,600	13.0	16.0
3632273	24ABC624A**30	CNPV*1917A**	58MV(B,C)060−14	23,400	13.0	16.0
3632286	24ABC624A**30	CNPV*1917A**	58PH*045−08	23,200	13.0	16.0
3632317	24ABC624A**30	CNPV*1917A**	58UVB060−14	23,400	13.0	16.0
3632295	24ABC624A**30	CNPV*1917A**+TDR		23,200	11.5	14.0
3630473	24ABC624A**30	CNPV*2414A**	58CV(A,X)070−12	22,800	12.5	15.5
3631480	24ABC624A**30	CNPV*2414A**	58PH*045−08	23,000	12.5	15.5
4744663	24ABC624A**30	CNPV*2414A**	59*P5A040E14**10	24,000	12.0	14.5
3631734	24ABC624A**30	CNPV*2414A**+TDR		23,000	11.5	14.0
3630474	24ABC624A**30	CNPV*2417A**	58CV(A,X)070−12	22,800	12.5	15.5
3630529	24ABC624A**30	CNPV*2417A**	58CV(A,X)090−16	22,800	13.0	16.0
4137546	24ABC624A**30	CNPV*2417A**	58HDV040−−12	23,400	12.5	15.2
3630815	24ABC624A**30	CNPV*2417A**	58ME(B,C)040−12	23,200	13.0	16.0
3630881	24ABC624A**30	CNPV*2417A**	58ME(B,C)060−12	23,200	13.0	16.0
3630943	24ABC624A**30	CNPV*2417A**	58ME(B,C)080−12	23,000	13.0	16.0
3631145	24ABC624A**30	CNPV*2417A**	58MV(B,C)060−14	23,000	12.5	15.5
3631481	24ABC624A**30	CNPV*2417A**	58PH*045−08	23,000	12.5	15.5
3631935	24ABC624A**30	CNPV*2417A**	58UVB060−14	23,000	12.5	15.5
3644925	24ABC624A**30	CNPV*2417A**	58VLR105−12	24,000	13.0	16.0
3644924	24ABC624A**30	CNPV*2417A**	58VMR105−12	24,000	13.0	15.5
4744664	24ABC624A**30	CNPV*2417A**	59*N*A060V17**14	24,000	12.7	15.5
4744665	24ABC624A**30	CNPV*2417A**	59*N*A080V17**14	23,800	12.7	15.5
4744666	24ABC624A**30	CNPV*2417A**	59*P5A040E14**10	24,000	12.0	14.5
4744667	24ABC624A**30	CNPV*2417A**	59*P5A060E17**14	24,000	12.7	15.5
4137548	24ABC624A**30	CNPV*2417A**	OVLAAB036098	23,400	12.5	15.5
4137547	24ABC624A**30	CNPV*2417A**	OVMAAB036098	23,400	12.5	15.5
4137549	24ABC624A**30	CNPV*2417A**	OVMAAB042112	23,400	13.0	16.0
3631735	24ABC624A**30	CNPV*2417A**+TDR		23,000	11.5	14.0
3630475	24ABC624A**30	CNPV*3014A**	58CV(A,X)070−12	23,000	13.0	16.0
3631482	24ABC624A**30	CNPV*3014A**	58PH*045−08	23,200	12.5	15.5
4744668	24ABC624A**30	CNPV*3014A**	59*P5A040E14**10	24,000	12.0	14.5
3631736	24ABC624A**30	CNPV*3014A**+TDR		23,200	11.5	14.0
3630476	24ABC624A**30	CNPV*3017A**	58CV(A,X)070−12	23,000	13.0	16.0
3630530	24ABC624A**30	CNPV*3017A**	58CV(A,X)090−16	23,000	13.0	16.0
4137550	24ABC624A**30	CNPV*3017A**	58HDV040−−12	23,600	12.5	15.5
4137551	24ABC624A**30	CNPV*3017A**	58HDV060−−12	24,000	12.5	15.5
3630816	24ABC624A**30	CNPV*3017A**	58ME(B,C)040−12	23,600	13.0	16.0
3630882	24ABC624A**30	CNPV*3017A**	58ME(B,C)060−12	23,600	13.0	16.0
3630944	24ABC624A**30	CNPV*3017A**	58ME(B,C)080−12	23,400	13.0	16.0

See notes on page 52

COMBINATION RATINGS

AHRI Ref. No.	Model Number	Indoor Model	Furnace Model	Capacity	EER	SEER
3631146	24ABC624A**30	CNPV*3017A**	58MV(B,C)060−14	23,200	13.0	16.0
3631483	24ABC624A**30	CNPV*3017A**	58PH*045−08	23,200	13.0	16.0
3631936	24ABC624A**30	CNPV*3017A**	58UVB060−14	23,200	13.0	16.0
3644927	24ABC624A**30	CNPV*3017A**	58VLR105−12	24,000	13.0	16.0
3644926	24ABC624A**30	CNPV*3017A**	58VMR105−12	24,000	13.0	16.0
4744669	24ABC624A**30	CNPV*3017A**	59*N*A060V17**14	24,000	13.0	16.0
4744670	24ABC624A**30	CNPV*3017A**	59*N*A080V17**14	24,000	13.0	16.0
4744671	24ABC624A**30	CNPV*3017A**	59*P5A040E14**10	24,000	12.0	14.5
4744672	24ABC624A**30	CNPV*3017A**	59*P5A060E17**14	24,000	13.0	16.0
4137553	24ABC624A**30	CNPV*3017A**	OVLAAB036098	23,600	13.0	16.0
4137552	24ABC624A**30	CNPV*3017A**	OVMAAB036098	23,600	13.0	16.0
4137554	24ABC624A**30	CNPV*3017A**	OVMAAB042112	23,600	13.0	16.0
3631737	24ABC624A**30	CNPV*3017A**+TDR		23,200	11.5	14.0
3630466	24ABC624A**30	CNPV*3117A**	58CV(A,X)070−12	23,400	13.0	16.0
3630524	24ABC624A**30	CNPV*3117A**	58CV(A,X)090−16	23,400	13.0	16.0
4137555	24ABC624A**30	CNPV*3117A**	58HDV040−−12	24,000	13.0	16.0
4137556	24ABC624A**30	CNPV*3117A**	58HDV060−−12	24,000	13.0	16.0
3630810	24ABC624A**30	CNPV*3117A**	58ME(B,C)040−12	24,000	13.0	16.0
3630876	24ABC624A**30	CNPV*3117A**	58ME(B,C)060−12	24,000	13.0	16.0
3630938	24ABC624A**30	CNPV*3117A**	58ME(B,C)080−12	24,000	13.0	16.0
3631140	24ABC624A**30	CNPV*3117A**	58MV(B,C)060−14	23,800	13.0	16.0
3631473	24ABC624A**30	CNPV*3117A**	58PH*045−08	23,800	13.0	16.0
3631930	24ABC624A**30	CNPV*3117A**	58UVB060−14	23,800	13.0	16.0
3644929	24ABC624A**30	CNPV*3117A**	58VLR105−12	24,000	13.0	16.0
3644928	24ABC624A**30	CNPV*3117A**	58VMR105−12	24,000	13.0	16.0
4744673	24ABC624A**30	CNPV*3117A**	59*N*A060V17**14	24,000	13.0	16.0
4744674	24ABC624A**30	CNPV*3117A**	59*N*A080V17**14	24,000	13.2	16.5
4744675	24ABC624A**30	CNPV*3117A**	59*P5A040E14**10	24,000	12.5	15.2
4744676	24ABC624A**30	CNPV*3117A**	59*P5A060E17**14	24,000	13.2	16.5
4137558	24ABC624A**30	CNPV*3117A**	OVLAAB036098	24,000	13.0	16.0
4137557	24ABC624A**30	CNPV*3117A**	OVMAAB036098	24,000	13.0	16.0
4137559	24ABC624A**30	CNPV*3117A**	OVMAAB042112	24,000	13.0	16.0
3630477	24ABC624A**30	CNPV*3617A**	58CV(A,X)070−12	23,000	13.0	16.0
3630531	24ABC624A**30	CNPV*3617A**	58CV(A,X)090−16	23,000	13.0	16.0
3630817	24ABC624A**30	CNPV*3617A**	58ME(B,C)040−12	23,600	13.0	16.0
3630883	24ABC624A**30	CNPV*3617A**	58ME(B,C)060−12	23,600	13.0	16.0
3630945	24ABC624A**30	CNPV*3617A**	58ME(B,C)080−12	23,400	13.0	16.0
3631147	24ABC624A**30	CNPV*3617A**	58MV(B,C)060−14	23,200	13.0	16.0
3631484	24ABC624A**30	CNPV*3617A**	58PH*045−08	23,200	13.0	16.0
3631937	24ABC624A**30	CNPV*3617A**	58UVB060−14	23,200	13.0	16.0
3644931	24ABC624A**30	CNPV*3617A**	58VLR105−12	24,000	13.0	16.0
3644930	24ABC624A**30	CNPV*3617A**	58VMR105−12	24,000	13.0	16.0
3631738	24ABC624A**30	CNPV*3617A**+TDR		23,200	11.5	14.0
3630532	24ABC624A**30	CNPV*3621A**	58CV(A,X)090−16	23,000	13.0	16.0
3630596	24ABC624A**30	CNPV*3621A**	58CV(A,X)110−20	23,000	13.0	16.0
3630818	24ABC624A**30	CNPV*3621A**	58ME(B,C)040−12	23,600	13.0	16.0
3630884	24ABC624A**30	CNPV*3621A**	58ME(B,C)060−12	23,600	13.0	16.0
3630946	24ABC624A**30	CNPV*3621A**	58ME(B,C)080−12	23,400	13.0	16.0
3631148	24ABC624A**30	CNPV*3621A**	58MV(B,C)060−14	23,200	13.0	16.0
3631205	24ABC624A**30	CNPV*3621A**	58MV(B,C)080−14	23,000	13.0	16.0
3631256	24ABC624A**30	CNPV*3621A**	58MV(B,C)080−20	22,800	13.0	16.0
3631320	24ABC624A**30	CNPV*3621A**	58MV(B,C)100−20	23,000	13.0	16.0
3631938	24ABC624A**30	CNPV*3621A**	58UVB060−14	23,200	13.0	16.0
3631995	24ABC624A**30	CNPV*3621A**	58UVB080−14	23,000	13.0	16.0
3632047	24ABC624A**30	CNPV*3621A**	58UVB080−20	22,800	13.0	16.0
3632111	24ABC624A**30	CNPV*3621A**	58UVB100−20	23,000	13.0	16.0
3644933	24ABC624A**30	CNPV*3621A**	58VLR105−12	24,000	13.0	16.0
3644932	24ABC624A**30	CNPV*3621A**	58VMR105−12	24,000	13.0	16.0
3631739	24ABC624A**30	CNPV*3621A**+TDR		23,200	11.5	14.0
3630770	24ABC624A**30	CSPH*2412A**	58HDV040−−12	23,200	12.8	15.2
3630779	24ABC624A**30	CSPH*2412A**	58HDV060−−12	23,200	12.8	15.2
3644943	24ABC624A**30	CSPH*2412A**	58VLR105−12	24,000	13.0	16.0
3644942	24ABC624A**30	CSPH*2412A**	58VMR105−12	24,000	13.0	15.5
4744695	24ABC624A**30	CSPH*2412A**	59*N*A060V17**14	24,000	12.7	15.5
4744696	24ABC624A**30	CSPH*2412A**	59*N*A080V17**14	24,000	13.0	16.0
4744697	24ABC624A**30	CSPH*2412A**	59*N*A100V21**20	24,000	13.0	16.0
4744698	24ABC624A**30	CSPH*2412A**	59*N*A120V24**22	24,000	13.0	16.0
4744699	24ABC624A**30	CSPH*2412A**	59*P5A040E14**10	24,000	12.0	14.5
4744700	24ABC624A**30	CSPH*2412A**	59*P5A060E17**14	24,000	13.0	16.0
4137570	24ABC624A**30	CSPH*2412A**	OVLAAB036098	23,600	13.0	15.5
4137569	24ABC624A**30	CSPH*2412A**	OVMAAB036098	23,600	12.5	15.5
4137571	24ABC624A**30	CSPH*2412A**	OVMAAB042112	23,600	13.0	16.0
3631745	24ABC624A**30	CSPH*2412A**+TDR		23,200	11.5	14.0

See notes on page 52

COMBINATION RATINGS

24ABC6

AHRI Ref. No.	Model Number	Indoor Model	Furnace Model	Capacity	EER	SEER
3630482	24ABC624A**30	CSPH*3012A**	58CV(A,X)070−12	23,000	13.0	16.0
3630537	24ABC624A**30	CSPH*3012A**	58CV(A,X)090−16	23,200	13.0	16.0
3630601	24ABC624A**30	CSPH*3012A**	58CV(A,X)110−20	23,200	13.0	16.0
3630670	24ABC624A**30	CSPH*3012A**	58CV(A,X)135−22	23,200	13.0	16.0
3630721	24ABC624A**30	CSPH*3012A**	58CV(A,X)155−22	23,200	13.0	16.0
3630823	24ABC624A**30	CSPH*3012A**	58ME(B,C)040−12	23,600	13.0	16.0
3630889	24ABC624A**30	CSPH*3012A**	58ME(B,C)060−12	23,600	13.0	16.0
3630951	24ABC624A**30	CSPH*3012A**	58ME(B,C)080−12	23,400	13.0	16.0
3631153	24ABC624A**30	CSPH*3012A**	58MV(B,C)060−14	23,400	13.0	16.0
3631210	24ABC624A**30	CSPH*3012A**	58MV(B,C)080−14	23,000	13.0	16.0
3631261	24ABC624A**30	CSPH*3012A**	58MV(B,C)080−20	22,800	13.0	16.0
3631325	24ABC624A**30	CSPH*3012A**	58MV(B,C)100−20	23,000	13.0	16.0
3631387	24ABC624A**30	CSPH*3012A**	58MV(B,C)120−20	23,200	13.0	16.0
3631435	24ABC624A**30	CSPH*3012A**	58MVB040−14	23,000	13.0	16.0
3631489	24ABC624A**30	CSPH*3012A**	58PH*045−08	23,200	13.0	16.0
3644945	24ABC624A**30	CSPH*3012A**	58VLR105−12	24,000	13.0	16.0
3644944	24ABC624A**30	CSPH*3012A**	58VMR105−12	24,000	13.0	16.0
4744701	24ABC624A**30	CSPH*3012A**	59*N*A060V17**14	24,000	13.0	16.0
4744702	24ABC624A**30	CSPH*3012A**	59*N*A080V17**14	24,000	13.0	16.0
4744703	24ABC624A**30	CSPH*3012A**	59*N*A100V21**20	24,000	13.0	16.0
4744704	24ABC624A**30	CSPH*3012A**	59*N*A120V24**22	24,000	13.0	16.0
4744705	24ABC624A**30	CSPH*3012A**	59*P5A040E14**10	24,000	12.5	15.0
4744706	24ABC624A**30	CSPH*3012A**	59*P5A060E17**14	24,000	13.0	16.0
4137573	24ABC624A**30	CSPH*3012A**	OVLAAB036098	23,600	13.0	16.0
4137572	24ABC624A**30	CSPH*3012A**	OVMAAB036098	23,600	13.0	16.0
4137574	24ABC624A**30	CSPH*3012A**	OVMAAB042112	23,600	13.0	16.0
3631746	24ABC624A**30	CSPH*3012A**+TDR		23,200	11.5	14.0
3630483	24ABC624A**30	CSPH*3612A**	58CV(A,X)070−12	23,400	13.0	16.0
3630538	24ABC624A**30	CSPH*3612A**	58CV(A,X)090−16	23,400	13.0	16.0
3630602	24ABC624A**30	CSPH*3612A**	58CV(A,X)110−20	23,400	13.0	16.0
3630671	24ABC624A**30	CSPH*3612A**	58CV(A,X)135−22	23,400	13.0	16.0
3630722	24ABC624A**30	CSPH*3612A**	58CV(A,X)155−22	23,400	13.0	16.0
3630824	24ABC624A**30	CSPH*3612A**	58ME(B,C)040−12	24,000	13.0	16.0
3630890	24ABC624A**30	CSPH*3612A**	58ME(B,C)060−12	24,000	13.0	16.0
3630952	24ABC624A**30	CSPH*3612A**	58ME(B,C)080−12	23,800	13.0	16.0
3631154	24ABC624A**30	CSPH*3612A**	58MV(B,C)060−14	23,800	13.0	16.0
3631211	24ABC624A**30	CSPH*3612A**	58MV(B,C)080−14	23,400	13.0	16.0
3631262	24ABC624A**30	CSPH*3612A**	58MV(B,C)080−20	23,200	13.0	16.0
3631326	24ABC624A**30	CSPH*3612A**	58MV(B,C)100−20	23,400	13.0	16.0
3631388	24ABC624A**30	CSPH*3612A**	58MV(B,C)120−20	23,600	13.0	16.0
3631436	24ABC624A**30	CSPH*3612A**	58MVB040−14	23,400	13.0	16.0
3631490	24ABC624A**30	CSPH*3612A**	58PH*045−08	23,600	13.0	16.0
3644947	24ABC624A**30	CSPH*3612A**	58VLR105−12	24,000	13.0	16.0
3644946	24ABC624A**30	CSPH*3612A**	58VMR105−12	24,000	13.0	16.0
3631747	24ABC624A**30	CSPH*3612A**+TDR		23,600	12.0	14.5
3804396	24ABC624A**30	FB4CNF024		22,800	12.0	14.5
3693278	24ABC624A**30	FB4CNF024+TXV		22,800	12.0	15.0
3804397	24ABC624A**30	FB4CNF030		23,400	12.5	15.0
3693279	24ABC624A**30	FB4CNF030+TXV		23,400	13.0	16.0
3631708	24ABC624A**30	FE4AN(B,F)003+UI		23,200	13.0	16.0
3631721	24ABC624A**30	FE4ANF002+UI		23,200	13.0	16.0
3631753	24ABC624A**30	FF1ENP024		22,800	11.5	13.5
3631755	24ABC624A**30	FF1ENP025		23,200	12.5	15.0
3631756	24ABC624A**30	FF1ENP030		22,800	11.5	13.5
3631758	24ABC624A**30	FF1ENP031		23,200	12.5	15.0
3631760	24ABC624A**30	FF1ENP036		23,000	11.0	13.5
3631763	24ABC624A**30	FF1ENP037		23,400	12.5	15.5
3631804	24ABC624A**30	FV4CN(B,F)003		23,200	13.0	16.0
3631817	24ABC624A**30	FV4CNF002		23,200	13.0	16.0
3632298	24ABC624A**30	FX4DN(B,F)031		23,600	12.5	15.5
3632313	24ABC624A**30	FX4DNF025		23,400	13.0	16.0
3804398	24ABC624A**30	FY5BNF024		23,200	12.0	14.0
3693291	24ABC624A**30	FY5BNF024+TXV		23,200	12.0	15.0
3804399	24ABC624A**30	FY5BNF030		23,400	12.0	14.0
3693292	24ABC624A**30	FY5BNF030+TXV		23,400	12.0	15.0
3631772	24ABC630A**30	†CNPV*3117A**+TDR		28,600	12.0	14.5
3630485	24ABC630A**30	CAP**3014A**	58CV(A,X)070−12	27,600	13.0	15.2
3631773	24ABC630A**30	CAP**3014A**+TDR		28,000	12.0	14.0
3630486	24ABC630A**30	CAP**3017A**	58CV(A,X)070−12	27,800	12.5	15.5
3630540	24ABC630A**30	CAP**3017A**	58CV(A,X)090−16	27,800	13.0	16.0
3630826	24ABC630A**30	CAP**3017A**	58ME(B,C)040−12	28,200	13.0	16.0
3630892	24ABC630A**30	CAP**3017A**	58ME(B,C)060−12	28,200	13.0	15.5

See notes on page 52

COMBINATION RATINGS

AHRI Ref. No.	Model Number	Indoor Model	Furnace Model	Capacity	EER	SEER
3630954	24ABC630A**30	CAP**3017A**	58ME(B,C)080−12	28,000	13.0	16.0
3631001	24ABC630A**30	CAP**3017A**	58ME(B,C)080−16	28,200	13.0	15.5
3631156	24ABC630A**30	CAP**3017A**	58MV(B,C)060−14	28,000	13.0	15.5
3631504	24ABC630A**30	CAP**3017A**	58PH*070−16	28,000	12.5	15.0
3631946	24ABC630A**30	CAP**3017A**	58UVB060−14	28,000	13.0	15.5
3644949	24ABC630A**30	CAP**3017A**	58VLR105−12	27,800	13.0	15.5
3644948	24ABC630A**30	CAP**3017A**	58VMR105−12	27,600	13.0	15.5
4744707	24ABC630A**30	CAP**3017A**	59*N*A060V17**14	28,200	12.7	15.5
4744708	24ABC630A**30	CAP**3017A**	59*N*A080V17**14	28,400	12.7	15.5
4744709	24ABC630A**30	CAP**3017A**	59*P5A060E17**14	28,400	12.7	15.5
4744710	24ABC630A**30	CAP**3017A**	59*P5A080E17**16	28,800	12.7	15.5
4137576	24ABC630A**30	CAP**3017A**	OVLAAB036098	28,400	13.0	15.5
4137575	24ABC630A**30	CAP**3017A**	OVMAAB036098	28,400	13.0	15.0
3631774	24ABC630A**30	CAP**3017A**+TDR		28,000	12.0	14.0
3630487	24ABC630A**30	CAP**3614A**	58CV(A,X)070−12	27,800	12.5	15.5
3631775	24ABC630A**30	CAP**3614A**+TDR		28,000	12.0	14.0
3630488	24ABC630A**30	CAP**3617A**	58CV(A,X)070−12	27,800	12.5	15.5
3630541	24ABC630A**30	CAP**3617A**	58CV(A,X)090−16	27,800	13.0	16.0
3630827	24ABC630A**30	CAP**3617A**	58ME(B,C)040−12	28,200	13.0	16.0
3630893	24ABC630A**30	CAP**3617A**	58ME(B,C)060−12	28,200	13.0	16.0
3630955	24ABC630A**30	CAP**3617A**	58ME(B,C)080−12	28,200	13.0	16.0
3631002	24ABC630A**30	CAP**3617A**	58ME(B,C)080−16	28,400	13.0	16.0
3631157	24ABC630A**30	CAP**3617A**	58MV(B,C)060−14	28,000	13.0	16.0
3631505	24ABC630A**30	CAP**3617A**	58PH*070−16	28,000	12.5	15.2
3631947	24ABC630A**30	CAP**3617A**	58UVB060−14	28,000	13.0	16.0
3644951	24ABC630A**30	CAP**3617A**	58VLR105−12	28,000	13.0	15.5
3644950	24ABC630A**30	CAP**3617A**	58VMR105−12	27,600	13.0	15.5
4744711	24ABC630A**30	CAP**3617A**	59*N*A060V17**14	28,400	12.7	15.5
4744712	24ABC630A**30	CAP**3617A**	59*N*A080V17**14	28,600	13.0	16.0
4744713	24ABC630A**30	CAP**3617A**	59*P5A060E17**14	28,600	12.7	15.5
4744714	24ABC630A**30	CAP**3617A**	59*P5A080E17**16	28,800	12.7	15.5
4137578	24ABC630A**30	CAP**3617A**	OVLAAB036098	28,400	13.0	15.5
4137577	24ABC630A**30	CAP**3617A**	OVMAAB036098	28,400	13.0	15.5
3631776	24ABC630A**30	CAP**3617A**+TDR		28,000	12.0	14.0
3630771	24ABC630A**30	CAP**3619A**	58HDV040−−12	28,000	12.5	15.0
3630780	24ABC630A**30	CAP**3619A**	58HDV060−−12	28,200	12.5	15.2
4744720	24ABC630A**30	CAP**3619A**	59*N*A060V17**14	28,400	12.7	15.5
4744721	24ABC630A**30	CAP**3619A**	59*N*A080V17**14	28,600	13.0	16.0
4744722	24ABC630A**30	CAP**3619A**	59*N*A100V21**20	28,600	13.0	16.0
4744723	24ABC630A**30	CAP**3619A**	59*P5A060E17**14	28,600	12.7	15.5
4744724	24ABC630A**30	CAP**3619A**	59*P5A080E17**16	28,800	12.7	15.5
3631780	24ABC630A**30	CAP**3619A**+TDR		28,000	11.5	14.0
3630542	24ABC630A**30	CAP**3621A**	58CV(A,X)090−16	27,800	13.0	16.0
3630603	24ABC630A**30	CAP**3621A**	58CV(A,X)110−20	27,800	13.0	16.0
3630828	24ABC630A**30	CAP**3621A**	58ME(B,C)040−12	28,200	13.0	16.0
3630894	24ABC630A**30	CAP**3621A**	58ME(B,C)060−12	28,200	13.0	16.0
3630956	24ABC630A**30	CAP**3621A**	58ME(B,C)080−12	28,200	13.0	16.0
3631003	24ABC630A**30	CAP**3621A**	58ME(B,C)080−16	28,400	13.0	16.0
3631158	24ABC630A**30	CAP**3621A**	58MV(B,C)060−14	28,200	13.0	16.0
3631212	24ABC630A**30	CAP**3621A**	58MV(B,C)080−14	27,600	13.0	16.0
3631263	24ABC630A**30	CAP**3621A**	58MV(B,C)080−20	27,800	13.0	16.0
3631327	24ABC630A**30	CAP**3621A**	58MV(B,C)100−20	27,600	13.0	15.5
3631506	24ABC630A**30	CAP**3621A**	58PH*070−16	28,000	13.0	15.2
3631550	24ABC630A**30	CAP**3621A**	58PH*090−16	28,200	13.0	16.0
3631948	24ABC630A**30	CAP**3621A**	58UVB060−14	28,200	13.0	16.0
3632002	24ABC630A**30	CAP**3621A**	58UVB080−14	27,600	13.0	16.0
3632054	24ABC630A**30	CAP**3621A**	58UVB080−20	27,800	13.0	16.0
3632118	24ABC630A**30	CAP**3621A**	58UVB100−20	27,600	13.0	15.5
3644953	24ABC630A**30	CAP**3621A**	58VLR105−12	28,000	13.0	15.5
3644952	24ABC630A**30	CAP**3621A**	58VMR105−12	27,600	13.0	16.0
4744715	24ABC630A**30	CAP**3621A**	59*N*A060V17**14	28,400	12.7	15.5
4744716	24ABC630A**30	CAP**3621A**	59*N*A080V17**14	28,600	13.0	16.0
4744717	24ABC630A**30	CAP**3621A**	59*N*A100V21**20	28,600	13.0	16.0
4744718	24ABC630A**30	CAP**3621A**	59*P5A060E17**14	28,800	12.7	15.5
4744719	24ABC630A**30	CAP**3621A**	59*P5A080E17**16	29,000	12.7	15.5
3631777	24ABC630A**30	CAP**3621A**+TDR		28,000	12.0	14.0
3630543	24ABC630A**30	CAP**4221A**	58CV(A,X)090−16	28,000	13.0	16.0
3630604	24ABC630A**30	CAP**4221A**	58CV(A,X)110−20	28,000	13.0	16.0
3630829	24ABC630A**30	CAP**4221A**	58ME(B,C)040−12	28,400	13.0	16.0
3630895	24ABC630A**30	CAP**4221A**	58ME(B,C)060−12	28,600	13.0	16.0
3630957	24ABC630A**30	CAP**4221A**	58ME(B,C)080−12	28,400	13.0	16.0
3631004	24ABC630A**30	CAP**4221A**	58ME(B,C)080−16	28,600	13.0	16.0
3631159	24ABC630A**30	CAP**4221A**	58MV(B,C)060−14	28,200	13.0	16.0

See notes on page 52

COMBINATION RATINGS

AHRI Ref. No.	Model Number	Indoor Model	Furnace Model	Capacity	EER	SEER
3631213	24ABC630A**30	CAP**4221A**	58MV(B,C)080−14	28,000	13.0	16.0
3631264	24ABC630A**30	CAP**4221A**	58MV(B,C)080−20	28,000	13.0	16.0
3631328	24ABC630A**30	CAP**4221A**	58MV(B,C)100−20	27,800	13.0	16.0
3631507	24ABC630A**30	CAP**4221A**	58PH*070−16	28,200	12.5	15.5
3631551	24ABC630A**30	CAP**4221A**	58PH*090−16	28,400	13.0	16.0
3631949	24ABC630A**30	CAP**4221A**	58UVB060−14	28,200	13.0	16.0
3632003	24ABC630A**30	CAP**4221A**	58UVB080−14	28,000	13.0	16.0
3632055	24ABC630A**30	CAP**4221A**	58UVB080−20	28,000	13.0	16.0
3632119	24ABC630A**30	CAP**4221A**	58UVB100−20	27,800	13.0	16.0
3644955	24ABC630A**30	CAP**4221A**	58VLR105−12	28,200	13.0	16.0
3644954	24ABC630A**30	CAP**4221A**	58VMR105−12	27,800	13.0	16.0
3631778	24ABC630A**30	CAP**4221A**+TDR		28,200	11.5	14.0
3630605	24ABC630A**30	CAP**4224A**	58CV(A,X)110−20	28,200	13.0	16.0
3630672	24ABC630A**30	CAP**4224A**	58CV(A,X)135−22	28,200	13.0	16.0
3630723	24ABC630A**30	CAP**4224A**	58CV(A,X)155−22	28,200	13.0	16.0
3631214	24ABC630A**30	CAP**4224A**	58MV(B,C)080−14	28,000	13.0	16.0
3631265	24ABC630A**30	CAP**4224A**	58MV(B,C)080−20	28,000	13.0	16.0
3631329	24ABC630A**30	CAP**4224A**	58MV(B,C)100−20	27,800	13.0	16.0
3631389	24ABC630A**30	CAP**4224A**	58MV(B,C)120−20	28,000	13.0	16.0
3631437	24ABC630A**30	CAP**4224A**	58MVB040−14	28,000	13.0	16.0
3631552	24ABC630A**30	CAP**4224A**	58PH*090−16	28,400	13.0	16.0
3632004	24ABC630A**30	CAP**4224A**	58UVB080−14	28,000	13.0	16.0
3632056	24ABC630A**30	CAP**4224A**	58UVB080−20	28,000	13.0	16.0
3632120	24ABC630A**30	CAP**4224A**	58UVB100−20	27,800	13.0	16.0
3632180	24ABC630A**30	CAP**4224A**	58UVB120−20	28,000	13.0	16.0
3631779	24ABC630A**30	CAP**4224A**+TDR		28,200	11.5	14.0
3901733	24ABC630A**30	CAP**4817A**	58CV(A,X)090−16	29,000	13.0	16.0
3901736	24ABC630A**30	CAP**4817A**	58ME(B,C)060−12	29,000	13.0	16.0
3901737	24ABC630A**30	CAP**4817A**	58ME(B,C)080−12	29,000	13.0	16.0
3901738	24ABC630A**30	CAP**4817A**	58ME(B,C)080−16	29,000	13.0	16.0
3901735	24ABC630A**30	CAP**4817A**	58MEB040−12	29,000	13.0	16.0
3901732	24ABC630A**30	CAP**4817A**	58MV(B,C)060−14	29,000	13.0	16.0
3901734	24ABC630A**30	CAP**4817A**	58PH*070−16	29,000	13.0	16.0
4141765	24ABC630A**30	CAP**4817A**	58UVB060−14	29,000	13.0	16.0
3901740	24ABC630A**30	CAP**4817A**	58VLR105−12	29,000	13.0	16.0
3901739	24ABC630A**30	CAP**4817A**	58VMR105−12	28,800	13.0	16.0
3901731	24ABC630A**30	CAP**4817A**+TDR		29,000	12.0	14.5
3901745	24ABC630A**30	CAP**4821A**	58CV(A,X)110−20	29,000	13.0	16.0
3901742	24ABC630A**30	CAP**4821A**	58MV(B,C)080−14	28,800	13.0	16.0
3901743	24ABC630A**30	CAP**4821A**	58MV(B,C)080−20	28,800	13.0	16.0
3901744	24ABC630A**30	CAP**4821A**	58MV(B,C)100−20	28,600	13.0	16.0
3901746	24ABC630A**30	CAP**4821A**	58PH*090−16	29,000	13.0	16.0
4141766	24ABC630A**30	CAP**4821A**	58UVB080−14	28,800	13.0	16.0
4141767	24ABC630A**30	CAP**4821A**	58UVB080−20	28,800	13.0	16.0
4141768	24ABC630A**30	CAP**4821A**	58UVB100−20	28,600	13.0	16.0
3901741	24ABC630A**30	CAP**4821A**+TDR		29,000	12.0	14.5
3901754	24ABC630A**30	CAP**4823A**	58HDV080−−20	29,600	13.0	16.0
4045184	24ABC630A**30	CAP**4823A**	58HDV100−−20	29,000	13.0	16.0
3901753	24ABC630A**30	CAP**4823A**+TDR		29,000	12.0	14.5
3901750	24ABC630A**30	CAP**4824A**	58CV(A,X)135−22	29,000	13.0	16.0
3901751	24ABC630A**30	CAP**4824A**	58CV(A,X)155−22	29,000	13.0	16.0
3901752	24ABC630A**30	CAP**4824A**	58HDV100−−20	29,000	13.0	16.0
3901749	24ABC630A**30	CAP**4824A**	58MV(B,C)120−20	29,000	13.0	16.0
3901748	24ABC630A**30	CAP**4824A**	58MVB040−14	28,800	13.0	16.0
4141769	24ABC630A**30	CAP**4824A**	58UVB120−20	29,000	13.0	16.0
3901747	24ABC630A**30	CAP**4824A**+TDR		29,000	12.0	14.5
3630493	24ABC630A**30	CNPH*3017A**	58CV(A,X)070−12	27,800	12.5	15.5
3630549	24ABC630A**30	CNPH*3017A**	58CV(A,X)090−16	27,800	13.0	15.5
3630608	24ABC630A**30	CNPH*3017A**	58CV(A,X)110−20	27,800	13.0	15.5
3630673	24ABC630A**30	CNPH*3017A**	58CV(A,X)135−22	27,800	13.0	16.0
3630724	24ABC630A**30	CNPH*3017A**	58CV(A,X)155−22	27,800	13.0	16.0
4137579	24ABC630A**30	CNPH*3017A**	58HDV040−−12	28,400	12.5	15.0
4137580	24ABC630A**30	CNPH*3017A**	58HDV060−−12	28,400	12.5	15.2
4137581	24ABC630A**30	CNPH*3017A**	58HDV080−−20	28,400	12.5	15.5
4137582	24ABC630A**30	CNPH*3017A**	58HDV100−−20	28,400	12.5	15.5
3630835	24ABC630A**30	CNPH*3017A**	58ME(B,C)040−12	28,200	13.0	16.0
3630901	24ABC630A**30	CNPH*3017A**	58ME(B,C)060−12	28,200	13.0	15.5
3630963	24ABC630A**30	CNPH*3017A**	58ME(B,C)080−12	28,000	13.0	16.0
3631010	24ABC630A**30	CNPH*3017A**	58ME(B,C)080−16	28,200	13.0	15.5
3631165	24ABC630A**30	CNPH*3017A**	58MV(B,C)060−14	28,000	13.0	15.5
3631217	24ABC630A**30	CNPH*3017A**	58MV(B,C)080−14	27,600	12.5	15.5
3631268	24ABC630A**30	CNPH*3017A**	58MV(B,C)080−20	27,800	12.5	15.5
3631332	24ABC630A**30	CNPH*3017A**	58MV(B,C)100−20	27,600	12.5	15.5

See notes on page 52

COMBINATION RATINGS

AHRI Ref. No.	Model Number	Indoor Model	Furnace Model	Capacity	EER	SEER
3631390	24ABC630A**30	CNPH*3017A**	58MV(B,C)120−20	27,800	13.0	16.0
3631438	24ABC630A**30	CNPH*3017A**	58MVB040−14	27,800	12.5	15.5
3631513	24ABC630A**30	CNPH*3017A**	58PH*070−16	28,000	12.5	15.0
3631555	24ABC630A**30	CNPH*3017A**	58PH*090−16	28,000	12.5	15.5
3644969	24ABC630A**30	CNPH*3017A**	58VLR105−12	28,000	13.0	15.5
3644968	24ABC630A**30	CNPH*3017A**	58VMR105−12	27,600	13.0	15.5
4744746	24ABC630A**30	CNPH*3017A**	59*N*A060V17**14	28,200	12.7	15.5
4744747	24ABC630A**30	CNPH*3017A**	59*N*A080V17**14	28,400	12.7	15.5
4744748	24ABC630A**30	CNPH*3017A**	59*N*A100V21**20	28,600	12.7	15.5
4744749	24ABC630A**30	CNPH*3017A**	59*N*A120V24**22	28,600	13.0	16.0
4744750	24ABC630A**30	CNPH*3017A**	59*P5A060E17**14	28,600	12.7	15.5
4744751	24ABC630A**30	CNPH*3017A**	59*P5A080E17**16	28,800	12.7	15.5
4137619	24ABC630A**30	CNPH*3017A**	OVLAAB036098	28,400	12.5	15.0
4137621	24ABC630A**30	CNPH*3017A**	OVLAAB048112	28,600	12.5	15.0
4137618	24ABC630A**30	CNPH*3017A**	OVMAAB036098	28,400	12.5	15.0
4137620	24ABC630A**30	CNPH*3017A**	OVMAAB042112	28,600	12.5	15.5
3631787	24ABC630A**30	CNPH*3017A**+TDR		28,000	12.0	14.0
3630494	24ABC630A**30	CNPH*3117A**	58CV(A,X)070−12	28,400	13.0	16.0
3630550	24ABC630A**30	CNPH*3117A**	58CV(A,X)090−16	28,400	13.0	16.0
3630609	24ABC630A**30	CNPH*3117A**	58CV(A,X)110−20	28,400	13.0	16.0
3630674	24ABC630A**30	CNPH*3117A**	58CV(A,X)135−22	28,400	13.0	16.0
3630725	24ABC630A**30	CNPH*3117A**	58CV(A,X)155−22	28,400	13.0	16.0
4137583	24ABC630A**30	CNPH*3117A**	58HDV040−−12	28,400	12.5	15.5
4137584	24ABC630A**30	CNPH*3117A**	58HDV060−−12	28,400	12.5	15.5
4137585	24ABC630A**30	CNPH*3117A**	58HDV080−−20	28,400	13.0	16.0
4137586	24ABC630A**30	CNPH*3117A**	58HDV100−−20	28,400	13.0	16.0
3630836	24ABC630A**30	CNPH*3117A**	58ME(B,C)040−12	28,800	13.0	16.0
3630902	24ABC630A**30	CNPH*3117A**	58ME(B,C)060−12	28,800	13.0	16.0
3630964	24ABC630A**30	CNPH*3117A**	58ME(B,C)080−12	28,800	13.0	16.0
3631011	24ABC630A**30	CNPH*3117A**	58ME(B,C)080−16	29,000	13.0	16.0
3631166	24ABC630A**30	CNPH*3117A**	58MV(B,C)060−14	28,600	13.0	16.0
3631218	24ABC630A**30	CNPH*3117A**	58MV(B,C)080−14	28,200	13.0	16.0
3631269	24ABC630A**30	CNPH*3117A**	58MV(B,C)080−20	28,400	13.0	16.0
3631333	24ABC630A**30	CNPH*3117A**	58MV(B,C)100−20	28,200	13.0	16.0
3631391	24ABC630A**30	CNPH*3117A**	58MV(B,C)120−20	28,400	13.0	16.0
3631439	24ABC630A**30	CNPH*3117A**	58MVB040−14	28,400	13.0	16.0
3631514	24ABC630A**30	CNPH*3117A**	58PH*070−16	28,600	13.0	16.0
3631556	24ABC630A**30	CNPH*3117A**	58PH*090−16	28,600	13.0	16.0
4744752	24ABC630A**30	CNPH*3117A**	59*N*A060V17**14	29,000	13.0	16.0
4744753	24ABC630A**30	CNPH*3117A**	59*N*A080V17**14	29,000	13.0	16.0
4744754	24ABC630A**30	CNPH*3117A**	59*N*A100V21**20	29,200	13.0	16.0
4744755	24ABC630A**30	CNPH*3117A**	59*N*A120V24**22	29,200	13.2	16.5
4744756	24ABC630A**30	CNPH*3117A**	59*P5A060E17**14	29,200	13.0	16.0
4744757	24ABC630A**30	CNPH*3117A**	59*P5A080E17**16	29,400	13.0	16.0
4137623	24ABC630A**30	CNPH*3117A**	OVLAAB036098	29,000	12.5	15.5
4137625	24ABC630A**30	CNPH*3117A**	OVLAAB048112	29,000	12.5	15.5
4137622	24ABC630A**30	CNPH*3117A**	OVMAAB036098	29,000	12.5	15.0
4137624	24ABC630A**30	CNPH*3117A**	OVMAAB042112	29,000	13.0	16.0
3632297	24ABC630A**30	CNPH*3117A**+TDR		28,600	12.0	14.5
3630495	24ABC630A**30	CNPH*3617A**	58CV(A,X)070−12	27,800	12.5	15.5
3630551	24ABC630A**30	CNPH*3617A**	58CV(A,X)090−16	27,800	13.0	15.5
3630610	24ABC630A**30	CNPH*3617A**	58CV(A,X)110−20	27,800	13.0	15.5
3630675	24ABC630A**30	CNPH*3617A**	58CV(A,X)135−22	27,800	13.0	16.0
3630726	24ABC630A**30	CNPH*3617A**	58CV(A,X)155−22	27,800	13.0	16.0
4137587	24ABC630A**30	CNPH*3617A**	58HDV040−−12	28,400	12.5	15.0
4137588	24ABC630A**30	CNPH*3617A**	58HDV060−−12	28,600	12.5	15.2
4137589	24ABC630A**30	CNPH*3617A**	58HDV080−−20	28,600	12.5	15.5
4137590	24ABC630A**30	CNPH*3617A**	58HDV100−−20	28,600	12.5	15.5
3630837	24ABC630A**30	CNPH*3617A**	58ME(B,C)040−12	28,200	13.0	16.0
3630903	24ABC630A**30	CNPH*3617A**	58ME(B,C)060−12	28,200	13.0	15.5
3630965	24ABC630A**30	CNPH*3617A**	58ME(B,C)080−12	28,000	13.0	16.0
3631012	24ABC630A**30	CNPH*3617A**	58ME(B,C)080−16	28,200	13.0	15.5
3631167	24ABC630A**30	CNPH*3617A**	58MV(B,C)060−14	28,000	13.0	15.5
3631219	24ABC630A**30	CNPH*3617A**	58MV(B,C)080−14	27,600	12.5	15.5
3631270	24ABC630A**30	CNPH*3617A**	58MV(B,C)080−20	27,800	12.5	15.5
3631334	24ABC630A**30	CNPH*3617A**	58MV(B,C)100−20	27,600	12.5	15.5
3631392	24ABC630A**30	CNPH*3617A**	58MV(B,C)120−20	27,800	13.0	16.0
3631440	24ABC630A**30	CNPH*3617A**	58MVB040−14	27,800	12.5	15.5
3631515	24ABC630A**30	CNPH*3617A**	58PH*070−16	28,000	12.5	15.0
3631557	24ABC630A**30	CNPH*3617A**	58PH*090−16	28,000	12.5	15.5
3644971	24ABC630A**30	CNPH*3617A**	58VLR105−12	28,000	13.0	15.5
3644970	24ABC630A**30	CNPH*3617A**	58VMR105−12	27,600	13.0	15.5
4744758	24ABC630A**30	CNPH*3617A**	59*N*A060V17**14	28,200	12.7	15.5

See notes on page 52

COMBINATION RATINGS

AHRI Ref. No.	Model Number	Indoor Model	Furnace Model	Capacity	EER	SEER
4744759	24ABC630A**30	CNPH*3617A**	59*N*A080V17**14	28,400	12.7	15.5
4744760	24ABC630A**30	CNPH*3617A**	59*N*A100V21**20	28,600	12.7	15.5
4744761	24ABC630A**30	CNPH*3617A**	59*N*A120V24**22	28,600	13.0	16.0
4744762	24ABC630A**30	CNPH*3617A**	59*P5A060E17**14	28,600	12.7	15.5
4744763	24ABC630A**30	CNPH*3617A**	59*P5A080E17**16	28,800	12.7	15.5
4137627	24ABC630A**30	CNPH*3617A**	OVLAAB036098	28,400	12.5	15.0
4137629	24ABC630A**30	CNPH*3617A**	OVLAAB048112	28,600	12.5	15.0
4137626	24ABC630A**30	CNPH*3617A**	OVMAAB036098	28,400	12.5	15.0
4137628	24ABC630A**30	CNPH*3617A**	OVMAAB042112	28,600	12.5	15.5
3631788	24ABC630A**30	CNPH*3617A**+TDR		28,000	12.0	14.0
3630496	24ABC630A**30	CNPH*4221A**	58CV(A,X)070−12	28,000	13.0	15.5
3630552	24ABC630A**30	CNPH*4221A**	58CV(A,X)090−16	28,000	13.0	16.0
3630611	24ABC630A**30	CNPH*4221A**	58CV(A,X)110−20	28,200	13.0	16.0
3630676	24ABC630A**30	CNPH*4221A**	58CV(A,X)135−22	28,200	13.0	16.0
3630727	24ABC630A**30	CNPH*4221A**	58CV(A,X)155−22	28,200	13.0	16.0
3630838	24ABC630A**30	CNPH*4221A**	58ME(B,C)040−12	28,400	13.0	16.0
3630904	24ABC630A**30	CNPH*4221A**	58ME(B,C)060−12	28,400	13.0	16.0
3630966	24ABC630A**30	CNPH*4221A**	58ME(B,C)080−12	28,400	13.0	16.0
3631013	24ABC630A**30	CNPH*4221A**	58ME(B,C)080−16	28,600	13.0	16.0
3631168	24ABC630A**30	CNPH*4221A**	58MV(B,C)060−14	28,200	13.0	16.0
3631220	24ABC630A**30	CNPH*4221A**	58MV(B,C)080−14	28,000	13.0	15.5
3631271	24ABC630A**30	CNPH*4221A**	58MV(B,C)080−20	28,000	13.0	16.0
3631335	24ABC630A**30	CNPH*4221A**	58MV(B,C)100−20	27,800	13.0	15.5
3631393	24ABC630A**30	CNPH*4221A**	58MV(B,C)120−20	28,200	13.0	16.0
3631441	24ABC630A**30	CNPH*4221A**	58MVB040−14	28,000	13.0	15.5
3631516	24ABC630A**30	CNPH*4221A**	58PH*070−16	28,200	12.5	15.5
3631558	24ABC630A**30	CNPH*4221A**	58PH*090−16	28,400	13.0	16.0
3644973	24ABC630A**30	CNPH*4221A**	58VLR105−12	28,200	13.0	15.5
3644972	24ABC630A**30	CNPH*4221A**	58VMR105−12	27,800	13.0	15.5
3631789	24ABC630A**30	CNPH*4221A**+TDR		28,200	11.5	14.0
3630489	24ABC630A**30	CNPV*3014A**	58CV(A,X)070−12	27,800	12.5	15.0
3631781	24ABC630A**30	CNPV*3014A**+TDR		28,000	12.0	14.0
3630490	24ABC630A**30	CNPV*3017A**	58CV(A,X)070−12	27,800	12.5	15.5
3630544	24ABC630A**30	CNPV*3017A**	58CV(A,X)090−16	27,800	13.0	15.5
4137593	24ABC630A**30	CNPV*3017A**	58HDV040−−12	28,400	12.5	15.0
4137594	24ABC630A**30	CNPV*3017A**	58HDV060−−12	28,600	12.5	15.0
3630830	24ABC630A**30	CNPV*3017A**	58ME(B,C)040−12	28,200	13.0	16.0
3630896	24ABC630A**30	CNPV*3017A**	58ME(B,C)060−12	28,200	13.0	15.5
3630958	24ABC630A**30	CNPV*3017A**	58ME(B,C)080−12	28,000	13.0	16.0
3631005	24ABC630A**30	CNPV*3017A**	58ME(B,C)080−16	28,200	13.0	15.5
3631160	24ABC630A**30	CNPV*3017A**	58MV(B,C)060−14	28,000	13.0	15.5
3631508	24ABC630A**30	CNPV*3017A**	58PH*070−16	28,000	12.5	15.0
3631950	24ABC630A**30	CNPV*3017A**	58UVB060−14	28,000	13.0	15.5
3644957	24ABC630A**30	CNPV*3017A**	58VLR105−12	28,000	13.0	15.5
3644956	24ABC630A**30	CNPV*3017A**	58VMR105−12	27,600	13.0	15.5
4744725	24ABC630A**30	CNPV*3017A**	59*N*A060V17**14	28,200	12.7	15.5
4744726	24ABC630A**30	CNPV*3017A**	59*N*A080V17**14	28,400	12.7	15.5
4744727	24ABC630A**30	CNPV*3017A**	59*P5A060E17**14	28,600	12.7	15.5
4744728	24ABC630A**30	CNPV*3017A**	59*P5A080E17**16	28,800	12.7	15.5
4137596	24ABC630A**30	CNPV*3017A**	OVLAAB036098	28,400	12.5	15.0
4137595	24ABC630A**30	CNPV*3017A**	OVMAAB036098	28,400	12.5	15.0
4137597	24ABC630A**30	CNPV*3017A**	OVMAAB042112	28,600	12.5	15.5
3631782	24ABC630A**30	CNPV*3017A**+TDR		28,000	12.0	14.0
3630484	24ABC630A**30	CNPV*3117A**	58CV(A,X)070−12	28,400	13.0	16.0
3630539	24ABC630A**30	CNPV*3117A**	58CV(A,X)090−16	28,400	13.0	16.0
4137598	24ABC630A**30	CNPV*3117A**	58HDV040−−12	29,000	12.5	15.2
4137599	24ABC630A**30	CNPV*3117A**	58HDV060−−12	29,000	12.5	15.2
3630825	24ABC630A**30	CNPV*3117A**	58ME(B,C)040−12	28,800	13.0	16.0
3630891	24ABC630A**30	CNPV*3117A**	58ME(B,C)060−12	28,800	13.0	16.0
3630953	24ABC630A**30	CNPV*3117A**	58ME(B,C)080−12	28,800	13.0	16.0
3631000	24ABC630A**30	CNPV*3117A**	58ME(B,C)080−16	29,000	13.0	16.0
3631155	24ABC630A**30	CNPV*3117A**	58MV(B,C)060−14	28,600	13.0	16.0
3631503	24ABC630A**30	CNPV*3117A**	58PH*070−16	28,600	13.0	16.0
3631945	24ABC630A**30	CNPV*3117A**	58UVB060−14	28,600	13.0	16.0
3644959	24ABC630A**30	CNPV*3117A**	58VLR105−12	28,600	13.0	16.0
3644958	24ABC630A**30	CNPV*3117A**	58VMR105−12	28,200	13.0	16.0
4744729	24ABC630A**30	CNPV*3117A**	59*N*A060V17**14	29,000	13.0	16.0
4744730	24ABC630A**30	CNPV*3117A**	59*N*A080V17**14	29,000	13.0	16.0
4744731	24ABC630A**30	CNPV*3117A**	59*P5A060E17**14	29,200	13.0	16.0
4744732	24ABC630A**30	CNPV*3117A**	59*P5A080E17**16	29,400	13.0	16.0
4137601	24ABC630A**30	CNPV*3117A**	OVLAAB036098	29,000	12.5	15.5
4137600	24ABC630A**30	CNPV*3117A**	OVMAAB036098	29,000	12.5	15.0
4137602	24ABC630A**30	CNPV*3117A**	OVMAAB042112	29,000	12.5	15.5

See notes on page 52

COMBINATION RATINGS

AHRI Ref. No.	Model Number	Indoor Model	Furnace Model	Capacity	EER	SEER
3630491	24ABC630A**30	CNPV*3617A**	58CV(A,X)070−12	27,800	12.5	15.5
3630545	24ABC630A**30	CNPV*3617A**	58CV(A,X)090−16	27,800	13.0	15.5
4137603	24ABC630A**30	CNPV*3617A**	58HDV040−−12	28,400	12.5	15.0
4137604	24ABC630A**30	CNPV*3617A**	58HDV060−−12	28,600	12.5	15.2
3630831	24ABC630A**30	CNPV*3617A**	58ME(B,C)040−12	28,200	13.0	16.0
3630897	24ABC630A**30	CNPV*3617A**	58ME(B,C)060−12	28,200	13.0	15.5
3630959	24ABC630A**30	CNPV*3617A**	58ME(B,C)080−12	28,000	13.0	16.0
3631006	24ABC630A**30	CNPV*3617A**	58ME(B,C)080−16	28,200	13.0	15.5
3631161	24ABC630A**30	CNPV*3617A**	58MV(B,C)060−14	28,000	13.0	15.5
3631509	24ABC630A**30	CNPV*3617A**	58PH*070−16	28,000	12.5	15.0
3631951	24ABC630A**30	CNPV*3617A**	58UVB060−14	28,000	13.0	15.5
3644961	24ABC630A**30	CNPV*3617A**	58VLR105−12	28,000	13.0	15.5
3644960	24ABC630A**30	CNPV*3617A**	58VMR105−12	27,600	13.0	15.5
4744733	24ABC630A**30	CNPV*3617A**	59*N*A060V17**14	28,200	12.7	15.5
4744734	24ABC630A**30	CNPV*3617A**	59*N*A080V17**14	28,400	12.7	15.5
4744735	24ABC630A**30	CNPV*3617A**	59*P5A060E17**14	28,600	12.7	15.5
4744736	24ABC630A**30	CNPV*3617A**	59*P5A080E17**16	28,800	12.7	15.5
4137606	24ABC630A**30	CNPV*3617A**	OVLAAB036098	28,400	12.5	15.0
4137605	24ABC630A**30	CNPV*3617A**	OVMAAB036098	28,400	12.5	15.0
4137607	24ABC630A**30	CNPV*3617A**	OVMAAB042112	28,600	12.5	15.5
3631783	24ABC630A**30	CNPV*3617A**+TDR		28,000	12.0	14.0
3630546	24ABC630A**30	CNPV*3621A**	58CV(A,X)090−16	27,800	13.0	16.0
3630606	24ABC630A**30	CNPV*3621A**	58CV(A,X)110−20	27,800	13.0	15.5
4137591	24ABC630A**30	CNPV*3621A**	58HDV040−−12	28,400	12.5	15.0
4137592	24ABC630A**30	CNPV*3621A**	58HDV060−−12	28,600	12.5	15.2
4137608	24ABC630A**30	CNPV*3621A**	58HDV080−−20	28,800	12.5	15.2
3630832	24ABC630A**30	CNPV*3621A**	58ME(B,C)040−12	28,200	13.0	16.0
3630898	24ABC630A**30	CNPV*3621A**	58ME(B,C)060−12	28,200	13.0	15.5
3630960	24ABC630A**30	CNPV*3621A**	58ME(B,C)080−12	28,000	13.0	16.0
3631007	24ABC630A**30	CNPV*3621A**	58ME(B,C)080−16	28,200	13.0	15.5
3631162	24ABC630A**30	CNPV*3621A**	58MV(B,C)060−14	28,000	13.0	15.5
3631215	24ABC630A**30	CNPV*3621A**	58MV(B,C)080−14	27,600	12.5	15.5
3631266	24ABC630A**30	CNPV*3621A**	58MV(B,C)080−20	27,800	12.5	15.5
3631330	24ABC630A**30	CNPV*3621A**	58MV(B,C)100−20	27,600	12.5	15.5
3631510	24ABC630A**30	CNPV*3621A**	58PH*070−16	28,000	12.5	15.0
3631553	24ABC630A**30	CNPV*3621A**	58PH*090−16	28,000	12.5	15.5
3631952	24ABC630A**30	CNPV*3621A**	58UVB060−14	28,000	13.0	15.5
3632005	24ABC630A**30	CNPV*3621A**	58UVB080−14	27,600	12.5	15.5
3632057	24ABC630A**30	CNPV*3621A**	58UVB080−20	27,800	12.5	15.5
3632121	24ABC630A**30	CNPV*3621A**	58UVB100−20	27,600	12.5	15.5
3644963	24ABC630A**30	CNPV*3621A**	58VLR105−12	28,000	13.0	15.5
3644962	24ABC630A**30	CNPV*3621A**	58VMR105−12	27,600	13.0	15.5
4744737	24ABC630A**30	CNPV*3621A**	59*N*A060V17**14	28,400	12.7	15.5
4744738	24ABC630A**30	CNPV*3621A**	59*N*A080V17**14	28,400	12.7	15.5
4744739	24ABC630A**30	CNPV*3621A**	59*N*A100V21**20	28,600	12.7	15.5
4744740	24ABC630A**30	CNPV*3621A**	59*P5A060E17**14	28,600	12.7	15.5
4744741	24ABC630A**30	CNPV*3621A**	59*P5A080E17**16	28,800	12.7	15.5
4137610	24ABC630A**30	CNPV*3621A**	OVLAAB036098	28,400	12.5	15.0
4137612	24ABC630A**30	CNPV*3621A**	OVLAAB048112	28,600	12.5	15.0
4137609	24ABC630A**30	CNPV*3621A**	OVMAAB036098	28,400	12.5	15.0
4137611	24ABC630A**30	CNPV*3621A**	OVMAAB042112	28,600	12.5	15.5
3631784	24ABC630A**30	CNPV*3621A**+TDR		28,000	12.0	14.0
4137613	24ABC630A**30	CNPV*3717A**	58HDV040−−12	29,000	12.5	15.2
4137614	24ABC630A**30	CNPV*3717A**	58HDV060−−12	29,000	12.5	15.5
4744742	24ABC630A**30	CNPV*3717A**	59*N*A060V17**14	29,200	13.0	16.0
4744743	24ABC630A**30	CNPV*3717A**	59*N*A080V17**14	29,400	13.2	16.5
4744744	24ABC630A**30	CNPV*3717A**	59*P5A060E17**14	29,600	13.0	16.0
4744745	24ABC630A**30	CNPV*3717A**	59*P5A080E17**16	29,800	13.0	16.0
4137616	24ABC630A**30	CNPV*3717A**	OVLAAB036098	29,000	13.0	16.0
4137615	24ABC630A**30	CNPV*3717A**	OVMAAB036098	29,000	12.5	15.5
4137617	24ABC630A**30	CNPV*3717A**	OVMAAB042112	29,000	13.0	16.0
3630492	24ABC630A**30	CNPV*4217A**	58CV(A,X)070−12	28,200	13.0	16.0
3630547	24ABC630A**30	CNPV*4217A**	58CV(A,X)090−16	28,200	13.0	16.0
3630833	24ABC630A**30	CNPV*4217A**	58ME(B,C)040−12	28,600	13.0	16.0
3630899	24ABC630A**30	CNPV*4217A**	58ME(B,C)060−12	28,600	13.0	16.0
3630961	24ABC630A**30	CNPV*4217A**	58ME(B,C)080−12	28,600	13.0	16.0
3631008	24ABC630A**30	CNPV*4217A**	58ME(B,C)080−16	28,800	13.0	16.0
3631163	24ABC630A**30	CNPV*4217A**	58MV(B,C)060−14	28,400	13.0	16.0
3631511	24ABC630A**30	CNPV*4217A**	58PH*070−16	28,400	13.0	15.5
3631953	24ABC630A**30	CNPV*4217A**	58UVB060−14	28,400	13.0	16.0
3644965	24ABC630A**30	CNPV*4217A**	58VLR105−12	28,400	13.0	16.0
3644964	24ABC630A**30	CNPV*4217A**	58VMR105−12	28,000	13.0	16.0
3631785	24ABC630A**30	CNPV*4217A**+TDR		28,400	11.5	14.0

See notes on page 52

COMBINATION RATINGS

AHRI Ref. No.	Model Number	Indoor Model	Furnace Model	Capacity	EER	SEER
3630548	24ABC630A**30	CNPV*4221A**	58CV(A,X)090−16	28,000	13.0	16.0
3630607	24ABC630A**30	CNPV*4221A**	58CV(A,X)110−20	28,200	13.0	16.0
3630834	24ABC630A**30	CNPV*4221A**	58ME(B,C)040−12	28,400	13.0	16.0
3630900	24ABC630A**30	CNPV*4221A**	58ME(B,C)060−12	28,400	13.0	16.0
3630962	24ABC630A**30	CNPV*4221A**	58ME(B,C)080−12	28,400	13.0	16.0
3631009	24ABC630A**30	CNPV*4221A**	58ME(B,C)080−16	28,600	13.0	16.0
3631164	24ABC630A**30	CNPV*4221A**	58MV(B,C)060−14	28,200	13.0	16.0
3631216	24ABC630A**30	CNPV*4221A**	58MV(B,C)080−14	28,000	13.0	15.5
3631267	24ABC630A**30	CNPV*4221A**	58MV(B,C)080−20	28,000	13.0	16.0
3631331	24ABC630A**30	CNPV*4221A**	58MV(B,C)100−20	27,800	13.0	15.5
3631512	24ABC630A**30	CNPV*4221A**	58PH*070−16	28,200	12.5	15.5
3631554	24ABC630A**30	CNPV*4221A**	58PH*090−16	28,400	13.0	16.0
3631954	24ABC630A**30	CNPV*4221A**	58UVB060−14	28,200	13.0	16.0
3632007	24ABC630A**30	CNPV*4221A**	58UVB080−14	28,000	13.0	15.5
3632058	24ABC630A**30	CNPV*4221A**	58UVB080−20	28,000	13.0	16.0
3632122	24ABC630A**30	CNPV*4221A**	58UVB100−20	27,800	13.0	15.5
3644967	24ABC630A**30	CNPV*4221A**	58VLR105−12	28,200	13.0	15.5
3644966	24ABC630A**30	CNPV*4221A**	58VMR105−12	27,800	13.0	15.5
3631786	24ABC630A**30	CNPV*4221A**+TDR		28,200	11.5	14.0
3818136	24ABC630A**30	CNPV*4821A**	58MV(B,C)080−14	29,000	13.0	16.0
3818137	24ABC630A**30	CNPV*4821A**	58MV(B,C)080−20	29,000	13.0	16.0
3818138	24ABC630A**30	CNPV*4821A**	58MV(B,C)100−20	29,000	13.0	16.0
4141770	24ABC630A**30	CNPV*4821A**	58UVB080−14	29,000	13.0	16.0
4141771	24ABC630A**30	CNPV*4821A**	58UVB080−20	29,000	13.0	16.0
4141772	24ABC630A**30	CNPV*4821A**	58UVB100−20	29,000	13.0	16.0
3630497	24ABC630A**30	CSPH*3012A**	58CV(A,X)070−12	27,800	12.5	15.5
3630553	24ABC630A**30	CSPH*3012A**	58CV(A,X)090−16	28,000	13.0	15.5
3630612	24ABC630A**30	CSPH*3012A**	58CV(A,X)110−20	28,000	13.0	15.5
3630677	24ABC630A**30	CSPH*3012A**	58CV(A,X)135−22	28,000	13.0	15.5
3630728	24ABC630A**30	CSPH*3012A**	58CV(A,X)155−22	28,000	13.0	16.0
3630772	24ABC630A**30	CSPH*3012A**	58HDV040−−12	27,800	12.5	14.5
3630781	24ABC630A**30	CSPH*3012A**	58HDV060−−12	28,000	12.5	15.0
3630839	24ABC630A**30	CSPH*3012A**	58ME(B,C)040−12	28,200	13.0	16.0
3630905	24ABC630A**30	CSPH*3012A**	58ME(B,C)060−12	28,200	13.0	15.5
3630967	24ABC630A**30	CSPH*3012A**	58ME(B,C)080−12	28,200	13.0	15.5
3631014	24ABC630A**30	CSPH*3012A**	58ME(B,C)080−16	28,200	13.0	15.5
3631169	24ABC630A**30	CSPH*3012A**	58MV(B,C)060−14	28,000	13.0	15.5
3631221	24ABC630A**30	CSPH*3012A**	58MV(B,C)080−14	27,800	12.5	15.5
3631272	24ABC630A**30	CSPH*3012A**	58MV(B,C)080−20	28,000	12.5	15.5
3631336	24ABC630A**30	CSPH*3012A**	58MV(B,C)100−20	27,600	12.5	15.5
3631394	24ABC630A**30	CSPH*3012A**	58MV(B,C)120−20	28,000	13.0	15.5
3631442	24ABC630A**30	CSPH*3012A**	58MVB040−14	27,800	12.5	15.0
3631517	24ABC630A**30	CSPH*3012A**	58PH*070−16	28,000	12.5	15.0
3631559	24ABC630A**30	CSPH*3012A**	58PH*090−16	28,000	12.5	15.5
3644975	24ABC630A**30	CSPH*3012A**	58VLR105−12	28,000	13.0	15.5
3644974	24ABC630A**30	CSPH*3012A**	58VMR105−12	27,600	13.0	15.5
4744764	24ABC630A**30	CSPH*3012A**	59*N*A060V17**14	28,400	12.7	15.5
4744765	24ABC630A**30	CSPH*3012A**	59*N*A080V17**14	28,600	12.7	15.5
4744766	24ABC630A**30	CSPH*3012A**	59*N*A100V21**20	28,800	12.7	15.5
4744767	24ABC630A**30	CSPH*3012A**	59*N*A120V24**22	28,600	13.0	16.0
4744768	24ABC630A**30	CSPH*3012A**	59*P5A060E17**14	28,600	12.7	15.5
4744769	24ABC630A**30	CSPH*3012A**	59*P5A080E17**16	28,800	12.7	15.5
4137631	24ABC630A**30	CSPH*3012A**	OVLAAB036098	28,400	12.5	15.0
4137633	24ABC630A**30	CSPH*3012A**	OVLAAB048112	28,800	12.5	15.0
4137630	24ABC630A**30	CSPH*3012A**	OVMAAB036098	28,600	12.5	15.0
4137632	24ABC630A**30	CSPH*3012A**	OVMAAB042112	28,600	12.5	15.0
3631791	24ABC630A**30	CSPH*3012A**+TDR		28,200	11.5	14.0
3630498	24ABC630A**30	CSPH*3612A**	58CV(A,X)070−12	28,200	13.0	16.0
3630554	24ABC630A**30	CSPH*3612A**	58CV(A,X)090−16	28,400	13.0	16.0
3630613	24ABC630A**30	CSPH*3612A**	58CV(A,X)110−20	28,400	13.0	16.0
3630678	24ABC630A**30	CSPH*3612A**	58CV(A,X)135−22	28,400	13.0	16.0
3630729	24ABC630A**30	CSPH*3612A**	58CV(A,X)155−22	28,400	13.0	16.0
3630773	24ABC630A**30	CSPH*3612A**	58HDV040−−12	28,400	12.5	15.0
3630782	24ABC630A**30	CSPH*3612A**	58HDV060−−12	28,600	12.5	15.0
3630840	24ABC630A**30	CSPH*3612A**	58ME(B,C)040−12	28,800	13.0	16.0
3630906	24ABC630A**30	CSPH*3612A**	58ME(B,C)060−12	28,800	13.0	16.0
3630968	24ABC630A**30	CSPH*3612A**	58ME(B,C)080−12	28,600	13.0	16.0
3631015	24ABC630A**30	CSPH*3612A**	58ME(B,C)080−16	28,800	13.0	16.0
3631170	24ABC630A**30	CSPH*3612A**	58MV(B,C)060−14	28,400	13.0	16.0
3631222	24ABC630A**30	CSPH*3612A**	58MV(B,C)080−14	28,200	13.0	16.0
3631273	24ABC630A**30	CSPH*3612A**	58MV(B,C)080−20	28,400	13.0	16.0
3631337	24ABC630A**30	CSPH*3612A**	58MV(B,C)100−20	28,200	13.0	16.0
3631395	24ABC630A**30	CSPH*3612A**	58MV(B,C)120−20	28,400	13.0	16.0

See notes on page 52

COMBINATION RATINGS

AHRI Ref. No.	Model Number	Indoor Model	Furnace Model	Capacity	EER	SEER
3631443	24ABC630A**30	CSPH*3612A**	58MVB040−14	28,200	13.0	16.0
3631518	24ABC630A**30	CSPH*3612A**	58PH*070−16	28,600	13.0	15.5
3631560	24ABC630A**30	CSPH*3612A**	58PH*090−16	28,600	13.0	16.0
3644977	24ABC630A**30	CSPH*3612A**	58VLR105−12	28,400	13.0	16.0
3644976	24ABC630A**30	CSPH*3612A**	58VMR105−12	28,000	13.0	16.0
4744770	24ABC630A**30	CSPH*3612A**	59*N*A060V17**14	28,800	13.0	16.0
4744771	24ABC630A**30	CSPH*3612A**	59*N*A080V17**14	29,000	13.0	16.0
4744772	24ABC630A**30	CSPH*3612A**	59*N*A100V21**20	29,200	13.0	16.0
4744773	24ABC630A**30	CSPH*3612A**	59*N*A120V24**22	29,000	13.2	16.5
4744774	24ABC630A**30	CSPH*3612A**	59*P5A060E17**14	29,200	13.0	16.0
4744775	24ABC630A**30	CSPH*3612A**	59*P5A080E17**16	29,400	13.0	16.0
4137635	24ABC630A**30	CSPH*3612A**	OVLAAB036098	29,000	12.5	15.5
4137637	24ABC630A**30	CSPH*3612A**	OVLAAB048112	25,000	12.5	15.5
4137634	24ABC630A**30	CSPH*3612A**	OVMAAB036098	29,000	12.5	15.0
4137636	24ABC630A**30	CSPH*3612A**	OVMAAB042112	29,000	13.0	16.0
3631792	24ABC630A**30	CSPH*3612A**+TDR		28,600	12.0	14.0
3630499	24ABC630A**30	CSPH*4212A**	58CV(A,X)070−12	28,400	13.0	16.0
3630555	24ABC630A**30	CSPH*4212A**	58CV(A,X)090−16	28,400	13.0	16.0
3630614	24ABC630A**30	CSPH*4212A**	58CV(A,X)110−20	28,600	13.0	16.0
3630679	24ABC630A**30	CSPH*4212A**	58CV(A,X)135−22	28,600	13.0	16.0
3630730	24ABC630A**30	CSPH*4212A**	58CV(A,X)155−22	28,600	13.0	16.0
3630841	24ABC630A**30	CSPH*4212A**	58ME(B,C)040−12	29,000	13.0	16.0
3630907	24ABC630A**30	CSPH*4212A**	58ME(B,C)060−12	29,000	13.0	16.0
3630969	24ABC630A**30	CSPH*4212A**	58ME(B,C)080−12	28,800	13.0	16.0
3631016	24ABC630A**30	CSPH*4212A**	58ME(B,C)080−16	29,000	13.0	16.0
3631171	24ABC630A**30	CSPH*4212A**	58MV(B,C)060−14	28,600	13.0	16.0
3631223	24ABC630A**30	CSPH*4212A**	58MV(B,C)080−14	28,400	13.0	16.0
3631274	24ABC630A**30	CSPH*4212A**	58MV(B,C)080−20	28,400	13.0	16.0
3631338	24ABC630A**30	CSPH*4212A**	58MV(B,C)100−20	28,200	13.0	16.0
3631396	24ABC630A**30	CSPH*4212A**	58MV(B,C)120−20	28,600	13.0	16.0
3631444	24ABC630A**30	CSPH*4212A**	58MVB040−14	28,400	13.0	16.0
3631519	24ABC630A**30	CSPH*4212A**	58PH*070−16	28,600	13.0	16.0
3631561	24ABC630A**30	CSPH*4212A**	58PH*090−16	28,800	13.0	16.0
3644979	24ABC630A**30	CSPH*4212A**	58VLR105−12	28,600	13.0	16.0
3644978	24ABC630A**30	CSPH*4212A**	58VMR105−12	28,200	13.0	16.0
3631793	24ABC630A**30	CSPH*4212A**+TDR		28,600	12.0	14.0
3804400	24ABC630A**30	FB4CNF030		28,000	12.5	14.5
3693280	24ABC630A**30	FB4CNF030+TXV		28,000	12.5	15.0
3804401	24ABC630A**30	FB4CNF036		28,000	12.5	14.5
3693281	24ABC630A**30	FB4CNF036+TXV		28,000	12.5	15.0
3631709	24ABC630A**30	FE4AN(B,F)003+UI		28,200	13.0	16.0
3631712	24ABC630A**30	FE4AN(B,F)005+UI		28,800	13.0	16.5
3631722	24ABC630A**30	FE4ANF002+UI		28,000	13.0	16.0
3631724	24ABC630A**30	FE5ANB004+UI		29,000	13.0	16.5
3631757	24ABC630A**30	FF1ENP030		27,600	12.0	14.0
3631759	24ABC630A**30	FF1ENP031		28,200	12.5	15.0
3631761	24ABC630A**30	FF1ENP036		28,000	12.0	14.0
3631764	24ABC630A**30	FF1ENP037		28,200	12.5	15.0
3631805	24ABC630A**30	FV4CN(B,F)003		28,200	13.0	16.0
3631808	24ABC630A**30	FV4CN(B,F)005		28,800	13.0	16.0
3631818	24ABC630A**30	FV4CNF002		28,000	13.0	16.0
3632299	24ABC630A**30	FX4DN(B,F)031		28,400	13.0	15.5
3632300	24ABC630A**30	FX4DN(B,F)037		28,800	13.0	16.0
3804402	24ABC630A**30	FY5BNF030		28,000	12.5	14.5
3693293	24ABC630A**30	FY5BNF030+TXV		28,200	12.5	14.5
3804403	24ABC630A**30	FY5BNF036		28,000	12.0	14.0
3693294	24ABC630A**30	FY5BNF036+TXV		28,200	12.0	14.5
3631820	24ABC636A**30	†CNPV*3717A**+TDR		34,400	12.0	14.5
3630501	24ABC636A**30	CAP**3614A**	58CV(A,X)070−12	32,800	12.0	15.0
3631492	24ABC636A**30	CAP**3614A**	58PH*045−08	32,600	11.5	14.0
3631821	24ABC636A**30	CAP**3614A**+TDR		32,800	11.5	14.0
3630502	24ABC636A**30	CAP**3617A**	58CV(A,X)070−12	32,800	12.0	15.0
3630557	24ABC636A**30	CAP**3617A**	58CV(A,X)090−16	33,000	12.5	15.5
3630843	24ABC636A**30	CAP**3617A**	58ME(B,C)040−12	33,200	12.5	15.5
3630909	24ABC636A**30	CAP**3617A**	58ME(B,C)060−12	33,200	12.5	15.0
3630971	24ABC636A**30	CAP**3617A**	58ME(B,C)080−12	33,000	12.5	15.0
3631018	24ABC636A**30	CAP**3617A**	58ME(B,C)080−16	33,200	12.5	15.0
3631173	24ABC636A**30	CAP**3617A**	58MV(B,C)060−14	33,000	12.5	15.0
3631493	24ABC636A**30	CAP**3617A**	58PH*045−08	32,800	12.0	14.5
3631521	24ABC636A**30	CAP**3617A**	58PH*070−16	33,000	12.0	15.0
3631963	24ABC636A**30	CAP**3617A**	58UVB060−14	33,000	12.5	15.0
3644981	24ABC636A**30	CAP**3617A**	58VLR105−12	33,000	12.5	15.0

See notes on page 52

COMBINATION RATINGS

AHRI Ref. No.	Model Number	Indoor Model	Furnace Model	Capacity	EER	SEER
3644980	24ABC636A**30	CAP**3617A**	58VMR105−12	32,600	12.5	15.0
4744776	24ABC636A**30	CAP**3617A**	59*N*A060V17**14	32,800	12.5	15.2
4744777	24ABC636A**30	CAP**3617A**	59*N*A080V17**14	33,000	12.7	15.5
4744778	24ABC636A**30	CAP**3617A**	59*P5A060E17**14	33,200	12.5	15.0
4744779	24ABC636A**30	CAP**3617A**	59*P5A080E17**16	33,200	12.7	15.5
4137639	24ABC636A**30	CAP**3617A**	OVLAAB036098	33,000	12.5	14.5
4137638	24ABC636A**30	CAP**3617A**	OVMAAB036098	33,200	12.5	14.5
4137640	24ABC636A**30	CAP**3617A**	OVMAAB042112	33,200	12.5	15.2
3631822	24ABC636A**30	CAP**3617A**+TDR		33,000	11.5	14.0
3630774	24ABC636A**30	CAP**3619A**	58HDV040−−12	32,800	11.5	14.5
3630783	24ABC636A**30	CAP**3619A**	58HDV060−−12	33,000	12.0	14.5
4744792	24ABC636A**30	CAP**3619A**	59*N*A060V17**14	32,800	12.5	15.2
4744793	24ABC636A**30	CAP**3619A**	59*N*A080V17**14	33,000	12.7	15.5
4744794	24ABC636A**30	CAP**3619A**	59*N*A100V21**20	33,200	12.7	15.5
4744795	24ABC636A**30	CAP**3619A**	59*P5A060E17**14	33,200	12.5	15.0
4744796	24ABC636A**30	CAP**3619A**	59*P5A080E17**16	33,200	12.7	15.5
3631829	24ABC636A**30	CAP**3619A**+TDR		33,000	11.5	14.0
3630558	24ABC636A**30	CAP**3621A**	58CV(A,X)090−16	33,000	12.5	15.5
3630615	24ABC636A**30	CAP**3621A**	58CV(A,X)110−20	33,000	12.5	15.5
3630844	24ABC636A**30	CAP**3621A**	58ME(B,C)040−12	33,200	12.5	15.5
3630910	24ABC636A**30	CAP**3621A**	58ME(B,C)060−12	33,400	12.5	15.5
3630972	24ABC636A**30	CAP**3621A**	58ME(B,C)080−12	33,200	12.5	15.5
3631019	24ABC636A**30	CAP**3621A**	58ME(B,C)080−16	33,200	12.5	15.0
3631058	24ABC636A**30	CAP**3621A**	58ME(B,C)100−20	33,200	13.0	16.0
3631174	24ABC636A**30	CAP**3621A**	58MV(B,C)060−14	33,000	12.5	15.5
3631224	24ABC636A**30	CAP**3621A**	58MV(B,C)080−14	33,000	12.0	15.0
3631275	24ABC636A**30	CAP**3621A**	58MV(B,C)080−20	32,800	12.5	15.0
3631339	24ABC636A**30	CAP**3621A**	58MV(B,C)100−20	33,000	12.5	15.5
3631522	24ABC636A**30	CAP**3621A**	58PH*070−16	33,000	12.0	15.0
3631562	24ABC636A**30	CAP**3621A**	58PH*090−16	33,200	12.5	15.5
3631613	24ABC636A**30	CAP**3621A**	58PH*110−20	33,400	12.5	15.5
3631964	24ABC636A**30	CAP**3621A**	58UVB060−14	33,000	12.5	15.5
3632015	24ABC636A**30	CAP**3621A**	58UVB080−14	33,000	12.0	15.0
3632066	24ABC636A**30	CAP**3621A**	58UVB080−20	32,800	12.5	15.0
3632130	24ABC636A**30	CAP**3621A**	58UVB100−20	33,000	12.5	15.5
3644983	24ABC636A**30	CAP**3621A**	58VLR105−12	33,000	12.5	15.0
3644985	24ABC636A**30	CAP**3621A**	58VLR120−20	33,000	13.0	15.5
3644982	24ABC636A**30	CAP**3621A**	58VMR105−12	32,800	12.5	15.0
3644984	24ABC636A**30	CAP**3621A**	58VMR120−20	32,800	12.5	15.5
4744780	24ABC636A**30	CAP**3621A**	59*N*A060V17**14	33,000	12.5	15.2
4744781	24ABC636A**30	CAP**3621A**	59*N*A080V17**14	33,000	12.7	15.5
4744782	24ABC636A**30	CAP**3621A**	59*N*A100V21**20	33,200	12.7	15.5
4744783	24ABC636A**30	CAP**3621A**	59*P5A060E17**14	33,400	12.5	15.2
4744784	24ABC636A**30	CAP**3621A**	59*P5A080E17**16	33,200	12.7	15.5
4137641	24ABC636A**30	CAP**3621A**	OVLAAB048112	33,400	12.5	15.2
3631823	24ABC636A**30	CAP**3621A**+TDR		33,000	11.5	14.0
3630559	24ABC636A**30	CAP**4221A**	58CV(A,X)090−16	33,200	12.5	15.5
3630616	24ABC636A**30	CAP**4221A**	58CV(A,X)110−20	33,200	12.5	15.5
3630845	24ABC636A**30	CAP**4221A**	58ME(B,C)040−12	33,400	12.5	15.5
3630911	24ABC636A**30	CAP**4221A**	58ME(B,C)060−12	33,600	12.5	15.5
3630973	24ABC636A**30	CAP**4221A**	58ME(B,C)080−12	33,400	12.5	15.5
3631020	24ABC636A**30	CAP**4221A**	58ME(B,C)080−16	33,400	12.5	15.5
3631059	24ABC636A**30	CAP**4221A**	58ME(B,C)100−20	33,400	13.0	16.0
3631175	24ABC636A**30	CAP**4221A**	58MV(B,C)060−14	33,400	12.5	15.5
3631225	24ABC636A**30	CAP**4221A**	58MV(B,C)080−14	33,200	12.5	15.0
3631276	24ABC636A**30	CAP**4221A**	58MV(B,C)080−20	33,200	12.5	15.5
3631340	24ABC636A**30	CAP**4221A**	58MV(B,C)100−20	33,200	12.5	15.5
3631523	24ABC636A**30	CAP**4221A**	58PH*070−16	33,200	12.0	15.0
3631563	24ABC636A**30	CAP**4221A**	58PH*090−16	33,400	13.0	16.0
3631614	24ABC636A**30	CAP**4221A**	58PH*110−20	33,600	13.0	16.0
3631965	24ABC636A**30	CAP**4221A**	58UVB060−14	33,400	12.5	15.5
3632016	24ABC636A**30	CAP**4221A**	58UVB080−14	33,200	12.5	15.0
3632067	24ABC636A**30	CAP**4221A**	58UVB080−20	33,200	12.5	15.5
3632131	24ABC636A**30	CAP**4221A**	58UVB100−20	33,200	12.5	15.5
3644987	24ABC636A**30	CAP**4221A**	58VLR105−12	33,200	12.5	15.0
3644989	24ABC636A**30	CAP**4221A**	58VLR120−20	33,200	13.0	16.0
3644986	24ABC636A**30	CAP**4221A**	58VMR105−12	33,000	12.5	15.0
3644988	24ABC636A**30	CAP**4221A**	58VMR120−20	33,000	13.0	15.5
4744785	24ABC636A**30	CAP**4221A**	59*N*A060V17**14	33,200	12.5	15.2
4744786	24ABC636A**30	CAP**4221A**	59*N*A080V17**14	33,200	12.7	15.5
4744787	24ABC636A**30	CAP**4221A**	59*N*A100V21**20	33,400	12.7	15.5
4744788	24ABC636A**30	CAP**4221A**	59*P5A060E17**14	33,600	12.5	15.2
4744789	24ABC636A**30	CAP**4221A**	59*P5A080E17**16	33,400	12.7	15.5

See notes on page 52

COMBINATION RATINGS

AHRI Ref. No.	Model Number	Indoor Model	Furnace Model	Capacity	EER	SEER
4137642	24ABC636A**30	CAP**4221A**	OVLAAB048112	33,800	12.5	15.2
3631824	24ABC636A**30	CAP**4221A**+TDR		33,400	11.5	14.0
3630617	24ABC636A**30	CAP**4224A**	58CV(A,X)110−20	33,200	13.0	15.5
3630680	24ABC636A**30	CAP**4224A**	58CV(A,X)135−22	33,200	13.0	16.0
3630731	24ABC636A**30	CAP**4224A**	58CV(A,X)155−22	33,400	13.0	16.0
3631060	24ABC636A**30	CAP**4224A**	58ME(B,C)100−20	33,400	13.0	16.0
3631226	24ABC636A**30	CAP**4224A**	58MV(B,C)080−14	33,200	12.5	15.0
3631277	24ABC636A**30	CAP**4224A**	58MV(B,C)080−20	33,200	12.5	15.5
3631341	24ABC636A**30	CAP**4224A**	58MV(B,C)100−20	33,200	12.5	15.5
3631397	24ABC636A**30	CAP**4224A**	58MV(B,C)120−20	33,200	13.0	16.0
3631445	24ABC636A**30	CAP**4224A**	58MVB040−14	33,000	12.5	15.0
3631564	24ABC636A**30	CAP**4224A**	58PH*090−16	33,600	13.0	16.0
3631615	24ABC636A**30	CAP**4224A**	58PH*110−20	33,600	13.0	16.0
3632017	24ABC636A**30	CAP**4224A**	58UVB080−14	33,200	12.5	15.0
3632068	24ABC636A**30	CAP**4224A**	58UVB080−20	33,200	12.5	15.5
3632132	24ABC636A**30	CAP**4224A**	58UVB100−20	33,200	12.5	15.5
3632188	24ABC636A**30	CAP**4224A**	58UVB120−20	33,200	13.0	16.0
3644991	24ABC636A**30	CAP**4224A**	58VLR120−20	33,200	13.0	16.0
3644990	24ABC636A**30	CAP**4224A**	58VMR120−20	33,000	13.0	15.5
4744790	24ABC636A**30	CAP**4224A**	59*N*A100V21**20	33,400	12.7	15.5
4744791	24ABC636A**30	CAP**4224A**	59*N*A120V24**22	33,400	13.0	16.0
3631825	24ABC636A**30	CAP**4224A**+TDR		33,400	11.5	14.0
3630503	24ABC636A**30	CAP**4817A**	58CV(A,X)070−12	33,600	12.5	15.5
3630560	24ABC636A**30	CAP**4817A**	58CV(A,X)090−16	33,800	13.0	16.0
3630846	24ABC636A**30	CAP**4817A**	58ME(B,C)040−12	34,000	13.0	16.0
3630912	24ABC636A**30	CAP**4817A**	58ME(B,C)060−12	34,200	13.0	16.0
3630974	24ABC636A**30	CAP**4817A**	58ME(B,C)080−12	34,000	13.0	16.0
3631021	24ABC636A**30	CAP**4817A**	58ME(B,C)080−16	34,200	13.0	16.0
3631176	24ABC636A**30	CAP**4817A**	58MV(B,C)060−14	34,000	13.0	16.0
3631494	24ABC636A**30	CAP**4817A**	58PH*045−08	33,800	12.0	14.5
3631524	24ABC636A**30	CAP**4817A**	58PH*070−16	33,800	12.0	15.0
3631966	24ABC636A**30	CAP**4817A**	58UVB060−14	34,000	13.0	16.0
3644993	24ABC636A**30	CAP**4817A**	58VLR105−12	34,000	12.5	15.5
3644992	24ABC636A**30	CAP**4817A**	58VMR105−12	33,600	13.0	15.5
3631826	24ABC636A**30	CAP**4817A**+TDR		34,000	11.5	14.0
3630561	24ABC636A**30	CAP**4821A**	58CV(A,X)090−16	33,600	13.0	16.0
3630618	24ABC636A**30	CAP**4821A**	58CV(A,X)110−20	33,600	13.0	16.0
3630847	24ABC636A**30	CAP**4821A**	58ME(B,C)040−12	33,800	13.0	16.0
3630913	24ABC636A**30	CAP**4821A**	58ME(B,C)060−12	34,000	13.0	16.0
3630975	24ABC636A**30	CAP**4821A**	58ME(B,C)080−12	33,800	13.0	16.0
3631022	24ABC636A**30	CAP**4821A**	58ME(B,C)080−16	34,000	13.0	15.5
3631061	24ABC636A**30	CAP**4821A**	58ME(B,C)100−20	33,800	13.0	16.0
3631177	24ABC636A**30	CAP**4821A**	58MV(B,C)060−14	33,800	13.0	15.5
3631227	24ABC636A**30	CAP**4821A**	58MV(B,C)080−14	33,600	12.5	15.5
3631278	24ABC636A**30	CAP**4821A**	58MV(B,C)080−20	33,600	12.5	15.5
3631342	24ABC636A**30	CAP**4821A**	58MV(B,C)100−20	33,600	13.0	15.5
3631525	24ABC636A**30	CAP**4821A**	58PH*070−16	33,600	12.0	15.0
3631565	24ABC636A**30	CAP**4821A**	58PH*090−16	34,000	13.0	16.0
3631616	24ABC636A**30	CAP**4821A**	58PH*110−20	34,000	13.0	16.0
3631967	24ABC636A**30	CAP**4821A**	58UVB060−14	33,800	13.0	15.5
3632018	24ABC636A**30	CAP**4821A**	58UVB080−14	33,600	12.5	15.5
3632069	24ABC636A**30	CAP**4821A**	58UVB080−20	33,600	12.5	15.5
3632133	24ABC636A**30	CAP**4821A**	58UVB100−20	33,600	13.0	15.5
3644995	24ABC636A**30	CAP**4821A**	58VLR105−12	33,800	12.5	15.5
3644997	24ABC636A**30	CAP**4821A**	58VLR120−20	33,600	13.0	16.0
3644994	24ABC636A**30	CAP**4821A**	58VMR105−12	33,400	13.0	15.5
3644996	24ABC636A**30	CAP**4821A**	58VMR120−20	33,400	13.0	15.5
3631827	24ABC636A**30	CAP**4821A**+TDR		33,800	11.5	14.0
3630784	24ABC636A**30	CAP**4823A**	58HDV060−−12	33,800	12.0	15.0
3630787	24ABC636A**30	CAP**4823A**	58HDV080−−20	34,200	12.5	15.0
3631830	24ABC636A**30	CAP**4823A**+TDR		33,800	11.5	14.0
3630619	24ABC636A**30	CAP**4824A**	58CV(A,X)110−20	33,600	13.0	16.0
3630681	24ABC636A**30	CAP**4824A**	58CV(A,X)135−22	33,600	13.0	16.0
3630732	24ABC636A**30	CAP**4824A**	58CV(A,X)155−22	33,800	13.0	16.0
3631062	24ABC636A**30	CAP**4824A**	58ME(B,C)100−20	33,800	13.0	16.0
3631228	24ABC636A**30	CAP**4824A**	58MV(B,C)080−14	33,600	12.5	15.5
3631279	24ABC636A**30	CAP**4824A**	58MV(B,C)080−20	33,600	13.0	15.5
3631343	24ABC636A**30	CAP**4824A**	58MV(B,C)100−20	33,800	13.0	16.0
3631398	24ABC636A**30	CAP**4824A**	58MV(B,C)120−20	33,600	13.0	16.0
3631446	24ABC636A**30	CAP**4824A**	58MVB040−14	33,400	12.5	15.5
3631566	24ABC636A**30	CAP**4824A**	58PH*090−16	34,000	13.0	16.0
3631617	24ABC636A**30	CAP**4824A**	58PH*110−20	34,200	13.0	16.0
3632019	24ABC636A**30	CAP**4824A**	58UVB080−14	33,600	12.5	15.5

See notes on page 52

COMBINATION RATINGS

AHRI Ref. No.	Model Number	Indoor Model	Furnace Model	Capacity	EER	SEER
3632070	24ABC636A**30	CAP**4824A**	58UVB080−20	33,600	13.0	15.5
3632134	24ABC636A**30	CAP**4824A**	58UVB100−20	33,800	13.0	16.0
3632189	24ABC636A**30	CAP**4824A**	58UVB120−20	33,600	13.0	16.0
3644999	24ABC636A**30	CAP**4824A**	58VLR120−20	33,600	13.0	16.0
3644998	24ABC636A**30	CAP**4824A**	58VMR120−20	33,600	13.0	16.0
3631828	24ABC636A**30	CAP**4824A**+TDR		33,800	11.5	14.0
3901759	24ABC636A**30	CAP**6021A**	58CV(A,X)110−20	34,000	13.0	16.0
3901762	24ABC636A**30	CAP**6021A**	58ME(B,C)100−20	34,000	13.0	16.0
3901756	24ABC636A**30	CAP**6021A**	58MV(B,C)080−14	34,000	13.0	15.5
3901757	24ABC636A**30	CAP**6021A**	58MV(B,C)080−20	34,000	13.0	16.0
3901758	24ABC636A**30	CAP**6021A**	58MV(B,C)100−20	34,000	13.0	16.0
3901760	24ABC636A**30	CAP**6021A**	58PH*090−16	34,000	13.0	16.0
3901761	24ABC636A**30	CAP**6021A**	58PH*110−20	34,000	13.0	16.0
4141773	24ABC636A**30	CAP**6021A**	58UVB080−14	34,000	13.0	15.5
4141774	24ABC636A**30	CAP**6021A**	58UVB080−20	34,000	13.0	16.0
4141775	24ABC636A**30	CAP**6021A**	58UVB100−20	34,000	13.0	16.0
3901764	24ABC636A**30	CAP**6021A**	58VLR120−20	34,000	13.0	16.0
3901763	24ABC636A**30	CAP**6021A**	58VMR120−20	34,000	13.0	16.0
3901755	24ABC636A**30	CAP**6021A**+TDR		34,000	12.0	14.5
3901768	24ABC636A**30	CAP**6024A**	58CV(A,X)135−22	34,000	13.0	16.0
3901769	24ABC636A**30	CAP**6024A**	58CV(A,X)155−22	34,000	13.0	16.0
3901770	24ABC636A**30	CAP**6024A**	58HDV100−−20	34,000	13.0	16.0
3901767	24ABC636A**30	CAP**6024A**	58MV(B,C)120−20	34,000	13.0	16.0
3901766	24ABC636A**30	CAP**6024A**	58MVB040−14	34,000	13.0	15.5
4141776	24ABC636A**30	CAP**6024A**	58UVB120−20	34,000	13.0	16.0
3901765	24ABC636A**30	CAP**6024A**+TDR		34,000	12.0	14.5
3901774	24ABC636A**30	CAP**6025A**	58CV(A,X)135−22	34,000	13.0	16.0
3901775	24ABC636A**30	CAP**6025A**	58CV(A,X)155−22	34,000	13.0	16.0
3901776	24ABC636A**30	CAP**6025A**	58HDV100−−20	34,000	13.0	16.0
3901773	24ABC636A**30	CAP**6025A**	58MV(B,C)120−20	34,000	13.0	16.0
3901772	24ABC636A**30	CAP**6025A**	58MVB040−14	34,000	13.0	16.0
4141777	24ABC636A**30	CAP**6025A**	58UVB120−20	34,000	13.0	16.0
3901771	24ABC636A**30	CAP**6025A**+TDR		34,600	12.0	14.5
3630506	24ABC636A**30	CNPH*3617A**	58CV(A,X)070−12	32,800	12.0	15.0
3630567	24ABC636A**30	CNPH*3617A**	58CV(A,X)090−16	32,800	12.5	15.0
3630624	24ABC636A**30	CNPH*3617A**	58CV(A,X)110−20	32,800	12.5	15.0
3630683	24ABC636A**30	CNPH*3617A**	58CV(A,X)135−22	32,800	12.5	15.0
3630734	24ABC636A**30	CNPH*3617A**	58CV(A,X)155−22	33,000	12.5	15.5
4137643	24ABC636A**30	CNPH*3617A**	58HDV040−−12	33,200	12.0	14.5
4137644	24ABC636A**30	CNPH*3617A**	58HDV060−−12	33,200	12.0	14.5
4137645	24ABC636A**30	CNPH*3617A**	58HDV080−−20	33,200	12.5	15.0
4137646	24ABC636A**30	CNPH*3617A**	58HDV100−−20	33,200	12.5	15.2
3630853	24ABC636A**30	CNPH*3617A**	58ME(B,C)040−12	33,000	12.5	15.0
3630919	24ABC636A**30	CNPH*3617A**	58ME(B,C)060−12	33,000	12.0	15.0
3630981	24ABC636A**30	CNPH*3617A**	58ME(B,C)080−12	33,000	12.5	15.0
3631028	24ABC636A**30	CNPH*3617A**	58ME(B,C)080−16	33,000	12.0	15.0
3631067	24ABC636A**30	CNPH*3617A**	58ME(B,C)100−20	32,800	12.5	15.5
3631183	24ABC636A**30	CNPH*3617A**	58MV(B,C)060−14	33,000	12.0	15.0
3631233	24ABC636A**30	CNPH*3617A**	58MV(B,C)080−14	32,800	12.0	14.5
3631284	24ABC636A**30	CNPH*3617A**	58MV(B,C)080−20	32,800	12.0	15.0
3631348	24ABC636A**30	CNPH*3617A**	58MV(B,C)100−20	33,000	12.0	15.0
3631400	24ABC636A**30	CNPH*3617A**	58MV(B,C)120−20	32,800	12.5	15.0
3631448	24ABC636A**30	CNPH*3617A**	58MVB040−14	32,600	12.0	14.5
3631497	24ABC636A**30	CNPH*3617A**	58PH*045−08	32,800	12.0	14.5
3631531	24ABC636A**30	CNPH*3617A**	58PH*070−16	32,800	12.0	14.5
3631571	24ABC636A**30	CNPH*3617A**	58PH*090−16	33,000	12.5	15.0
3631622	24ABC636A**30	CNPH*3617A**	58PH*110−20	33,000	12.5	15.5
3645021	24ABC636A**30	CNPH*3617A**	58VLR105−12	33,000	12.5	15.0
3645023	24ABC636A**30	CNPH*3617A**	58VLR120−20	32,800	12.5	15.5
3645020	24ABC636A**30	CNPH*3617A**	58VMR105−12	32,600	12.5	15.0
3645022	24ABC636A**30	CNPH*3617A**	58VMR120−20	32,800	12.5	15.0
4744821	24ABC636A**30	CNPH*3617A**	59*N*A060V17**14	32,800	12.5	15.0
4744822	24ABC636A**30	CNPH*3617A**	59*N*A080V17**14	33,000	12.5	15.2
4744823	24ABC636A**30	CNPH*3617A**	59*N*A100V21**20	33,000	12.5	15.2
4744824	24ABC636A**30	CNPH*3617A**	59*N*A120V24**22	33,000	12.7	15.5
4744825	24ABC636A**30	CNPH*3617A**	59*P5A060E17**14	33,200	12.5	15.0
4744826	24ABC636A**30	CNPH*3617A**	59*P5A080E17**16	33,000	12.5	15.2
4137689	24ABC636A**30	CNPH*3617A**	OVLAAB036098	33,000	12.0	14.5
4137691	24ABC636A**30	CNPH*3617A**	OVLAAB048112	33,400	12.0	14.5
4137692	24ABC636A**30	CNPH*3617A**	OVLAAB060154	34,000	12.5	15.2
4137688	24ABC636A**30	CNPH*3617A**	OVMAAB036098	33,000	12.0	14.5
4137690	24ABC636A**30	CNPH*3617A**	OVMAAB042112	33,200	12.5	15.2
3631837	24ABC636A**30	CNPH*3617A**+TDR		33,000	11.5	14.0

See notes on page 52

COMBINATION RATINGS

AHRI Ref. No.	Model Number	Indoor Model	Furnace Model	Capacity	EER	SEER
3630507	24ABC636A**30	CNPH*4221A**	58CV(A,X)070−12	33,000	12.0	15.0
3630568	24ABC636A**30	CNPH*4221A**	58CV(A,X)090−16	33,200	12.5	15.5
3630625	24ABC636A**30	CNPH*4221A**	58CV(A,X)110−20	33,200	12.5	15.5
3630684	24ABC636A**30	CNPH*4221A**	58CV(A,X)135−22	33,200	12.5	15.5
3630735	24ABC636A**30	CNPH*4221A**	58CV(A,X)155−22	33,400	13.0	16.0
4137647	24ABC636A**30	CNPH*4221A**	58HDV040−−12	33,600	12.0	14.5
4137648	24ABC636A**30	CNPH*4221A**	58HDV060−−12	33,600	12.0	15.0
4137649	24ABC636A**30	CNPH*4221A**	58HDV080−−20	33,600	12.5	15.2
4137650	24ABC636A**30	CNPH*4221A**	58HDV100−−20	33,600	12.5	15.5
3630854	24ABC636A**30	CNPH*4221A**	58ME(B,C)040−12	33,400	12.5	15.5
3630920	24ABC636A**30	CNPH*4221A**	58ME(B,C)060−12	33,400	12.5	15.5
3630982	24ABC636A**30	CNPH*4221A**	58ME(B,C)080−12	33,400	12.5	15.5
3631029	24ABC636A**30	CNPH*4221A**	58ME(B,C)080−16	33,400	12.5	15.5
3631068	24ABC636A**30	CNPH*4221A**	58ME(B,C)100−20	33,200	13.0	16.0
3631184	24ABC636A**30	CNPH*4221A**	58MV(B,C)060−14	33,400	12.5	15.0
3631234	24ABC636A**30	CNPH*4221A**	58MV(B,C)080−14	33,200	12.5	15.0
3631285	24ABC636A**30	CNPH*4221A**	58MV(B,C)080−20	33,200	12.5	15.0
3631349	24ABC636A**30	CNPH*4221A**	58MV(B,C)100−20	33,200	12.5	15.5
3631401	24ABC636A**30	CNPH*4221A**	58MV(B,C)120−20	33,200	12.5	15.5
3631449	24ABC636A**30	CNPH*4221A**	58MVB040−14	33,000	12.0	15.0
3631498	24ABC636A**30	CNPH*4221A**	58PH*045−08	33,200	12.0	14.5
3631532	24ABC636A**30	CNPH*4221A**	58PH*070−16	33,200	12.0	15.0
3631572	24ABC636A**30	CNPH*4221A**	58PH*090−16	33,400	12.5	15.5
3631623	24ABC636A**30	CNPH*4221A**	58PH*110−20	33,600	13.0	16.0
3645025	24ABC636A**30	CNPH*4221A**	58VLR105−12	33,400	12.5	15.0
3645027	24ABC636A**30	CNPH*4221A**	58VLR120−20	33,200	13.0	15.5
3645024	24ABC636A**30	CNPH*4221A**	58VMR105−12	33,000	12.5	15.0
3645026	24ABC636A**30	CNPH*4221A**	58VMR120−20	33,000	12.5	15.5
4744827	24ABC636A**30	CNPH*4221A**	59*N*A060V17**14	33,200	12.5	15.2
4744828	24ABC636A**30	CNPH*4221A**	59*N*A080V17**14	33,200	12.7	15.5
4744829	24ABC636A**30	CNPH*4221A**	59*N*A100V21**20	33,400	12.7	15.5
4744830	24ABC636A**30	CNPH*4221A**	59*N*A120V24**22	33,400	12.7	15.5
4744831	24ABC636A**30	CNPH*4221A**	59*P5A060E17**14	33,600	12.5	15.2
4744832	24ABC636A**30	CNPH*4221A**	59*P5A080E17**16	33,400	12.7	15.5
4137694	24ABC636A**30	CNPH*4221A**	OVLAAB036098	33,400	12.0	15.0
4137696	24ABC636A**30	CNPH*4221A**	OVLAAB048112	33,800	12.5	15.2
4137697	24ABC636A**30	CNPH*4221A**	OVLAAB060154	34,400	12.5	15.5
4137693	24ABC636A**30	CNPH*4221A**	OVMAAB036098	33,400	12.0	15.0
4137695	24ABC636A**30	CNPH*4221A**	OVMAAB042112	33,600	12.5	15.2
3631838	24ABC636A**30	CNPH*4221A**+TDR		33,400	11.5	14.0
4137651	24ABC636A**30	CNPH*4321A**	58HDV040−−12	33,600	12.5	15.0
4137652	24ABC636A**30	CNPH*4321A**	58HDV060−−12	33,600	12.5	15.2
4137653	24ABC636A**30	CNPH*4321A**	58HDV080−−20	33,600	13.0	16.0
4137654	24ABC636A**30	CNPH*4321A**	58HDV100−−20	33,600	13.0	16.0
4744833	24ABC636A**30	CNPH*4321A**	59*N*A060V17**14	34,000	12.7	15.5
4744834	24ABC636A**30	CNPH*4321A**	59*N*A080V17**14	34,200	13.0	16.0
4744835	24ABC636A**30	CNPH*4321A**	59*N*A100V21**20	34,400	13.0	16.0
4744836	24ABC636A**30	CNPH*4321A**	59*N*A120V24**22	34,400	13.0	16.0
4744837	24ABC636A**30	CNPH*4321A**	59*P5A060E17**14	34,600	12.7	15.5
4744838	24ABC636A**30	CNPH*4321A**	59*P5A080E17**16	34,400	13.0	16.0
4137699	24ABC636A**30	CNPH*4321A**	OVLAAB036098	34,200	12.5	15.2
4137701	24ABC636A**30	CNPH*4321A**	OVLAAB048112	34,600	12.5	15.5
4137702	24ABC636A**30	CNPH*4321A**	OVLAAB060154	35,400	13.0	16.0
4137698	24ABC636A**30	CNPH*4321A**	OVMAAB036098	34,400	12.5	15.2
4137700	24ABC636A**30	CNPH*4321A**	OVMAAB042112	34,400	13.0	16.0
3630508	24ABC636A**30	CNPH*4821A**	58CV(A,X)070−12	33,600	12.5	15.5
3630569	24ABC636A**30	CNPH*4821A**	58CV(A,X)090−16	33,600	13.0	16.0
3630626	24ABC636A**30	CNPH*4821A**	58CV(A,X)110−20	33,800	13.0	16.0
3630685	24ABC636A**30	CNPH*4821A**	58CV(A,X)135−22	33,800	13.0	16.0
3630736	24ABC636A**30	CNPH*4821A**	58CV(A,X)155−22	33,800	13.0	16.0
3630855	24ABC636A**30	CNPH*4821A**	58ME(B,C)040−12	34,000	13.0	16.0
3630921	24ABC636A**30	CNPH*4821A**	58ME(B,C)060−12	34,200	13.0	16.0
3630983	24ABC636A**30	CNPH*4821A**	58ME(B,C)080−12	34,000	13.0	16.0
3631030	24ABC636A**30	CNPH*4821A**	58ME(B,C)080−16	34,200	13.0	16.0
3631069	24ABC636A**30	CNPH*4821A**	58ME(B,C)100−20	34,000	13.0	16.0
3631185	24ABC636A**30	CNPH*4821A**	58MV(B,C)060−14	33,800	13.0	16.0
3631235	24ABC636A**30	CNPH*4821A**	58MV(B,C)080−14	33,800	12.5	15.5
3631286	24ABC636A**30	CNPH*4821A**	58MV(B,C)080−20	33,600	13.0	16.0
3631350	24ABC636A**30	CNPH*4821A**	58MV(B,C)100−20	33,800	13.0	16.0
3631402	24ABC636A**30	CNPH*4821A**	58MV(B,C)120−20	33,800	13.0	16.0
3631450	24ABC636A**30	CNPH*4821A**	58MVB040−14	33,600	12.5	15.5
3631499	24ABC636A**30	CNPH*4821A**	58PH*045−08	33,800	12.0	15.0
3631533	24ABC636A**30	CNPH*4821A**	58PH*070−16	33,800	12.5	15.0

See notes on page 52

COMBINATION RATINGS

AHRI Ref. No.	Model Number	Indoor Model	Furnace Model	Capacity	EER	SEER
3631573	24ABC636A**30	CNPH*4821A**	58PH*090−16	34,000	13.0	16.0
3631625	24ABC636A**30	CNPH*4821A**	58PH*110−20	34,200	13.0	16.0
3645029	24ABC636A**30	CNPH*4821A**	58VLR105−12	33,800	13.0	15.5
3645031	24ABC636A**30	CNPH*4821A**	58VLR120−20	33,800	13.0	16.0
3645028	24ABC636A**30	CNPH*4821A**	58VMR105−12	33,400	13.0	15.5
3645030	24ABC636A**30	CNPH*4821A**	58VMR120−20	33,600	13.0	16.0
3631839	24ABC636A**30	CNPH*4821A**+TDR		34,000	12.0	14.5
3630504	24ABC636A**30	CNPV*3617A**	58CV(A,X)070−12	32,800	12.0	15.0
3630562	24ABC636A**30	CNPV*3617A**	58CV(A,X)090−16	32,800	12.0	15.0
4137661	24ABC636A**30	CNPV*3617A**	58HDV040−−12	33,000	12.0	14.5
4137662	24ABC636A**30	CNPV*3617A**	58HDV060−−12	33,200	12.0	14.5
3630848	24ABC636A**30	CNPV*3617A**	58ME(B,C)040−12	33,000	12.0	15.0
3630914	24ABC636A**30	CNPV*3617A**	58ME(B,C)060−12	33,000	12.0	15.0
3630976	24ABC636A**30	CNPV*3617A**	58ME(B,C)080−12	33,000	12.0	15.0
3631023	24ABC636A**30	CNPV*3617A**	58ME(B,C)080−16	33,000	12.0	15.0
3631178	24ABC636A**30	CNPV*3617A**	58MV(B,C)060−14	33,000	12.0	15.0
3631495	24ABC636A**30	CNPV*3617A**	58PH*045−08	32,800	11.5	14.5
3631526	24ABC636A**30	CNPV*3617A**	58PH*070−16	32,800	12.0	14.5
3631968	24ABC636A**30	CNPV*3617A**	58UVB060−14	33,000	12.0	15.0
3645001	24ABC636A**30	CNPV*3617A**	58VLR105−12	33,000	12.0	15.0
3645000	24ABC636A**30	CNPV*3617A**	58VMR105−12	32,600	12.5	15.0
4744797	24ABC636A**30	CNPV*3617A**	59*N*A060V17**14	32,800	12.5	15.0
4744798	24ABC636A**30	CNPV*3617A**	59*N*A080V17**14	33,000	12.5	15.2
4744799	24ABC636A**30	CNPV*3617A**	59*P5A060E17**14	33,200	12.5	15.0
4744800	24ABC636A**30	CNPV*3617A**	59*P5A080E17**16	33,000	12.5	15.2
4137664	24ABC636A**30	CNPV*3617A**	OVLAAB036098	33,000	12.0	14.5
4137663	24ABC636A**30	CNPV*3617A**	OVMAAB036098	33,000	12.0	14.5
4137665	24ABC636A**30	CNPV*3617A**	OVMAAB042112	33,200	12.5	15.2
3631831	24ABC636A**30	CNPV*3617A**+TDR		33,000	11.5	14.0
3630563	24ABC636A**30	CNPV*3621A**	58CV(A,X)090−16	32,800	12.5	15.0
3630620	24ABC636A**30	CNPV*3621A**	58CV(A,X)110−20	33,000	12.5	15.0
4137655	24ABC636A**30	CNPV*3621A**	58HDV040−−12	33,200	12.0	14.5
4137656	24ABC636A**30	CNPV*3621A**	58HDV060−−12	33,200	12.0	14.5
4137666	24ABC636A**30	CNPV*3621A**	58HDV080−−20	33,800	12.5	15.0
3630849	24ABC636A**30	CNPV*3621A**	58ME(B,C)040−12	33,000	12.5	15.0
3630915	24ABC636A**30	CNPV*3621A**	58ME(B,C)060−12	33,000	12.0	15.0
3630977	24ABC636A**30	CNPV*3621A**	58ME(B,C)080−12	33,000	12.5	15.0
3631024	24ABC636A**30	CNPV*3621A**	58ME(B,C)080−16	33,000	12.0	15.0
3631063	24ABC636A**30	CNPV*3621A**	58ME(B,C)100−20	32,800	12.5	15.5
3631179	24ABC636A**30	CNPV*3621A**	58MV(B,C)060−14	33,000	12.0	15.0
3631229	24ABC636A**30	CNPV*3621A**	58MV(B,C)080−14	32,800	12.0	15.0
3631280	24ABC636A**30	CNPV*3621A**	58MV(B,C)080−20	32,800	12.0	15.0
3631344	24ABC636A**30	CNPV*3621A**	58MV(B,C)100−20	33,000	12.0	15.0
3631527	24ABC636A**30	CNPV*3621A**	58PH*070−16	32,800	12.0	14.5
3631567	24ABC636A**30	CNPV*3621A**	58PH*090−16	33,000	12.5	15.5
3631618	24ABC636A**30	CNPV*3621A**	58PH*110−20	33,200	12.5	15.5
3631969	24ABC636A**30	CNPV*3621A**	58UVB060−14	33,000	12.0	15.0
3632020	24ABC636A**30	CNPV*3621A**	58UVB080−14	32,800	12.0	15.0
3632071	24ABC636A**30	CNPV*3621A**	58UVB080−20	32,800	12.0	15.0
3632135	24ABC636A**30	CNPV*3621A**	58UVB100−20	33,000	12.0	15.0
3645003	24ABC636A**30	CNPV*3621A**	58VLR105−12	33,000	12.5	15.0
3645005	24ABC636A**30	CNPV*3621A**	58VLR120−20	32,800	12.5	15.5
3645002	24ABC636A**30	CNPV*3621A**	58VMR105−12	32,600	12.5	15.0
3645004	24ABC636A**30	CNPV*3621A**	58VMR120−20	32,800	12.5	15.0
4744801	24ABC636A**30	CNPV*3621A**	59*N*A060V17**14	32,800	12.5	15.0
4744802	24ABC636A**30	CNPV*3621A**	59*N*A080V17**14	33,000	12.5	15.2
4744803	24ABC636A**30	CNPV*3621A**	59*N*A100V21**20	33,000	12.5	15.2
4744804	24ABC636A**30	CNPV*3621A**	59*P5A060E17**14	33,200	12.5	15.0
4744805	24ABC636A**30	CNPV*3621A**	59*P5A080E17**16	33,000	12.5	15.2
4137668	24ABC636A**30	CNPV*3621A**	OVLAAB036098	33,000	12.0	14.5
4137670	24ABC636A**30	CNPV*3621A**	OVLAAB048112	33,400	12.0	15.0
4137667	24ABC636A**30	CNPV*3621A**	OVMAAB036098	33,200	12.0	14.5
4137669	24ABC636A**30	CNPV*3621A**	OVMAAB042112	33,200	12.5	15.2
3631832	24ABC636A**30	CNPV*3621A**+TDR		33,000	11.5	14.0
3630500	24ABC636A**30	CNPV*3717A**	58CV(A,X)070−12	34,000	12.5	15.5
3630556	24ABC636A**30	CNPV*3717A**	58CV(A,X)090−16	34,000	13.0	16.0
4137671	24ABC636A**30	CNPV*3717A**	58HDV040−−12	34,400	12.0	15.0
4137672	24ABC636A**30	CNPV*3717A**	58HDV060−−12	34,600	12.5	15.2
3630842	24ABC636A**30	CNPV*3717A**	58ME(B,C)040−12	34,400	13.0	16.0
3630908	24ABC636A**30	CNPV*3717A**	58ME(B,C)060−12	34,400	13.0	16.0
3630970	24ABC636A**30	CNPV*3717A**	58ME(B,C)080−12	34,200	13.0	16.0
3631017	24ABC636A**30	CNPV*3717A**	58ME(B,C)080−16	34,400	13.0	16.0
3631172	24ABC636A**30	CNPV*3717A**	58MV(B,C)060−14	34,200	13.0	16.0

See notes on page 52

COMBINATION RATINGS

AHRI Ref. No.	Model Number	Indoor Model	Furnace Model	Capacity	EER	SEER
3631491	24ABC636A**30	CNPV*3717A**	58PH*045−08	34,000	12.0	15.0
3631520	24ABC636A**30	CNPV*3717A**	58PH*070−16	34,200	12.5	15.5
3631962	24ABC636A**30	CNPV*3717A**	58UVB060−14	34,200	13.0	16.0
3645007	24ABC636A**30	CNPV*3717A**	58VLR105−12	34,200	13.0	15.5
3645006	24ABC636A**30	CNPV*3717A**	58VMR105−12	33,800	13.0	15.5
4744806	24ABC636A**30	CNPV*3717A**	59*N*A060V17**14	34,000	12.7	15.5
4744807	24ABC636A**30	CNPV*3717A**	59*N*A080V17**14	34,200	13.0	16.0
4744808	24ABC636A**30	CNPV*3717A**	59*P5A060E17**14	34,400	12.7	15.5
4744809	24ABC636A**30	CNPV*3717A**	59*P5A080E17**16	34,400	13.0	16.0
4137674	24ABC636A**30	CNPV*3717A**	OVLAAB036098	34,200	12.5	15.2
4137673	24ABC636A**30	CNPV*3717A**	OVMAAB036098	34,400	12.5	15.2
4137675	24ABC636A**30	CNPV*3717A**	OVMAAB042112	34,400	13.0	16.0
3630505	24ABC636A**30	CNPV*4217A**	58CV(A,X)070−12	33,400	12.5	15.0
3630564	24ABC636A**30	CNPV*4217A**	58CV(A,X)090−16	33,400	12.5	15.5
4137676	24ABC636A**30	CNPV*4217A**	58HDV040−−12	33,600	12.0	14.5
4137677	24ABC636A**30	CNPV*4217A**	58HDV060−−12	34,000	12.0	15.0
3630850	24ABC636A**30	CNPV*4217A**	58ME(B,C)040−12	33,600	12.5	15.5
3630916	24ABC636A**30	CNPV*4217A**	58ME(B,C)060−12	33,800	12.5	15.5
3630978	24ABC636A**30	CNPV*4217A**	58ME(B,C)080−12	33,600	12.5	15.5
3631025	24ABC636A**30	CNPV*4217A**	58ME(B,C)080−16	33,800	12.5	15.5
3631180	24ABC636A**30	CNPV*4217A**	58MV(B,C)060−14	33,600	12.5	15.5
3631496	24ABC636A**30	CNPV*4217A**	58PH*045−08	33,400	11.5	14.5
3631528	24ABC636A**30	CNPV*4217A**	58PH*070−16	33,400	12.0	15.0
3631970	24ABC636A**30	CNPV*4217A**	58UVB060−14	33,600	12.5	15.5
3645009	24ABC636A**30	CNPV*4217A**	58VLR105−12	33,600	12.5	15.0
3645008	24ABC636A**30	CNPV*4217A**	58VMR105−12	33,200	12.5	15.0
4744810	24ABC636A**30	CNPV*4217A**	59*N*A060V17**14	33,400	12.5	15.2
4744811	24ABC636A**30	CNPV*4217A**	59*N*A080V17**14	33,600	12.7	15.5
4744812	24ABC636A**30	CNPV*4217A**	59*P5A060E17**14	33,800	12.5	15.2
4744813	24ABC636A**30	CNPV*4217A**	59*P5A080E17**16	33,600	12.7	15.5
4137679	24ABC636A**30	CNPV*4217A**	OVLAAB036098	33,600	12.5	15.0
4137678	24ABC636A**30	CNPV*4217A**	OVMAAB036098	33,800	12.5	15.0
4137680	24ABC636A**30	CNPV*4217A**	OVMAAB042112	33,800	12.5	15.2
3631833	24ABC636A**30	CNPV*4217A**+TDR		33,800	11.5	14.0
3630565	24ABC636A**30	CNPV*4221A**	58CV(A,X)090−16	33,200	12.5	15.5
3630621	24ABC636A**30	CNPV*4221A**	58CV(A,X)110−20	33,200	12.5	15.5
4137657	24ABC636A**30	CNPV*4221A**	58HDV040−−12	33,600	12.0	14.5
4137658	24ABC636A**30	CNPV*4221A**	58HDV060−−12	33,800	12.0	15.0
4137681	24ABC636A**30	CNPV*4221A**	58HDV080−−20	34,200	12.5	15.2
3630851	24ABC636A**30	CNPV*4221A**	58ME(B,C)040−12	33,400	12.5	15.5
3630917	24ABC636A**30	CNPV*4221A**	58ME(B,C)060−12	33,400	12.5	15.5
3630979	24ABC636A**30	CNPV*4221A**	58ME(B,C)080−12	33,400	12.5	15.5
3631026	24ABC636A**30	CNPV*4221A**	58ME(B,C)080−16	33,400	12.5	15.5
3631064	24ABC636A**30	CNPV*4221A**	58ME(B,C)100−20	33,200	13.0	16.0
3631181	24ABC636A**30	CNPV*4221A**	58MV(B,C)060−14	33,400	12.5	15.0
3631230	24ABC636A**30	CNPV*4221A**	58MV(B,C)080−14	33,200	12.0	15.0
3631281	24ABC636A**30	CNPV*4221A**	58MV(B,C)080−20	33,200	12.5	15.0
3631345	24ABC636A**30	CNPV*4221A**	58MV(B,C)100−20	33,200	12.5	15.5
3631529	24ABC636A**30	CNPV*4221A**	58PH*070−16	33,200	12.0	14.5
3631568	24ABC636A**30	CNPV*4221A**	58PH*090−16	33,400	12.5	15.5
3631619	24ABC636A**30	CNPV*4221A**	58PH*110−20	33,600	13.0	16.0
3631971	24ABC636A**30	CNPV*4221A**	58UVB060−14	33,400	12.5	15.0
3632021	24ABC636A**30	CNPV*4221A**	58UVB080−14	33,200	12.0	15.0
3632072	24ABC636A**30	CNPV*4221A**	58UVB080−20	33,200	12.5	15.0
3632136	24ABC636A**30	CNPV*4221A**	58UVB100−20	33,200	12.5	15.5
3645011	24ABC636A**30	CNPV*4221A**	58VLR105−12	33,400	12.5	15.0
3645013	24ABC636A**30	CNPV*4221A**	58VLR120−20	33,200	13.0	15.5
3645010	24ABC636A**30	CNPV*4221A**	58VMR105−12	33,000	12.5	15.0
3645012	24ABC636A**30	CNPV*4221A**	58VMR120−20	33,000	12.5	15.5
4744814	24ABC636A**30	CNPV*4221A**	59*N*A060V17**14	33,200	12.5	15.2
4744815	24ABC636A**30	CNPV*4221A**	59*N*A080V17**14	33,200	12.7	15.5
4744816	24ABC636A**30	CNPV*4221A**	59*N*A100V21**20	33,400	12.7	15.5
4744817	24ABC636A**30	CNPV*4221A**	59*P5A060E17**14	33,600	12.5	15.2
4744818	24ABC636A**30	CNPV*4221A**	59*P5A080E17**16	33,400	12.7	15.5
4137683	24ABC636A**30	CNPV*4221A**	OVLAAB036098	33,400	12.0	15.0
4137685	24ABC636A**30	CNPV*4221A**	OVLAAB048112	33,800	12.5	15.2
4137682	24ABC636A**30	CNPV*4221A**	OVMAAB036098	33,400	12.0	15.0
4137684	24ABC636A**30	CNPV*4221A**	OVMAAB042112	33,600	12.5	15.2
3631834	24ABC636A**30	CNPV*4221A**+TDR		33,400	11.5	14.0
4137659	24ABC636A**30	CNPV*4324A**	58HDV080−−20	34,600	13.0	16.0
4137660	24ABC636A**30	CNPV*4324A**	58HDV100−−20	34,600	13.0	16.0
4744819	24ABC636A**30	CNPV*4324A**	59*N*A100V21**20	34,400	13.0	16.0
4744820	24ABC636A**30	CNPV*4324A**	59*N*A120V24**22	34,400	13.2	16.5

See notes on page 52

COMBINATION RATINGS

AHRI Ref. No.	Model Number	Indoor Model	Furnace Model	Capacity	EER	SEER
4137686	24ABC636A**30	CNPV*4324A**	OVLAAB048112	34,600	13.0	16.0
4137687	24ABC636A**30	CNPV*4324A**	OVLAAB060154	34,600	13.0	16.0
4219416	24ABC636A**30	CNPV*4324A**+TDR		34,400	12.0	14.5
3630566	24ABC636A**30	CNPV*4821A**	58CV(A,X)090−16	33,600	13.0	16.0
3630622	24ABC636A**30	CNPV*4821A**	58CV(A,X)110−20	33,800	13.0	16.0
3630852	24ABC636A**30	CNPV*4821A**	58ME(B,C)040−12	34,000	13.0	16.0
3630918	24ABC636A**30	CNPV*4821A**	58ME(B,C)060−12	34,200	13.0	16.0
3630980	24ABC636A**30	CNPV*4821A**	58ME(B,C)080−12	34,000	13.0	16.0
3631027	24ABC636A**30	CNPV*4821A**	58ME(B,C)080−16	34,200	13.0	16.0
3631065	24ABC636A**30	CNPV*4821A**	58ME(B,C)100−20	34,000	13.0	16.0
3631182	24ABC636A**30	CNPV*4821A**	58MV(B,C)060−14	33,800	13.0	16.0
3631231	24ABC636A**30	CNPV*4821A**	58MV(B,C)080−14	33,800	12.5	15.5
3631282	24ABC636A**30	CNPV*4821A**	58MV(B,C)080−20	33,600	13.0	16.0
3631346	24ABC636A**30	CNPV*4821A**	58MV(B,C)100−20	33,800	13.0	16.0
3631530	24ABC636A**30	CNPV*4821A**	58PH*070−16	33,800	12.5	15.0
3631569	24ABC636A**30	CNPV*4821A**	58PH*090−16	34,000	13.0	16.0
3631620	24ABC636A**30	CNPV*4821A**	58PH*110−20	34,200	13.0	16.0
3631972	24ABC636A**30	CNPV*4821A**	58UVB060−14	33,800	13.0	16.0
3632022	24ABC636A**30	CNPV*4821A**	58UVB080−14	33,800	12.5	15.5
3632073	24ABC636A**30	CNPV*4821A**	58UVB080−20	33,600	13.0	16.0
3632137	24ABC636A**30	CNPV*4821A**	58UVB100−20	33,800	13.0	16.0
3645015	24ABC636A**30	CNPV*4821A**	58VLR105−12	33,800	13.0	15.5
3645017	24ABC636A**30	CNPV*4821A**	58VLR120−20	33,800	13.0	16.0
3645014	24ABC636A**30	CNPV*4821A**	58VMR105−12	33,400	13.0	15.5
3645016	24ABC636A**30	CNPV*4821A**	58VMR120−20	33,600	13.0	16.0
3631835	24ABC636A**30	CNPV*4821A**+TDR		34,000	11.5	14.0
3630623	24ABC636A**30	CNPV*4824A**	58CV(A,X)110−20	33,800	13.0	16.0
3630682	24ABC636A**30	CNPV*4824A**	58CV(A,X)135−22	33,800	13.0	16.0
3630733	24ABC636A**30	CNPV*4824A**	58CV(A,X)155−22	33,800	13.0	16.0
3631066	24ABC636A**30	CNPV*4824A**	58ME(B,C)100−20	34,000	13.0	16.0
3631232	24ABC636A**30	CNPV*4824A**	58MV(B,C)080−14	33,800	12.5	15.5
3631283	24ABC636A**30	CNPV*4824A**	58MV(B,C)080−20	33,600	13.0	16.0
3631347	24ABC636A**30	CNPV*4824A**	58MV(B,C)100−20	33,800	13.0	16.0
3631399	24ABC636A**30	CNPV*4824A**	58MV(B,C)120−20	33,800	13.0	16.0
3631447	24ABC636A**30	CNPV*4824A**	58MVB040−14	33,600	12.5	15.5
3631570	24ABC636A**30	CNPV*4824A**	58PH*090−16	34,000	13.0	16.0
3631621	24ABC636A**30	CNPV*4824A**	58PH*110−20	34,200	13.0	16.0
3632023	24ABC636A**30	CNPV*4824A**	58UVB080−14	33,800	12.5	15.5
3632074	24ABC636A**30	CNPV*4824A**	58UVB080−20	33,600	13.0	16.0
3632138	24ABC636A**30	CNPV*4824A**	58UVB100−20	33,800	13.0	16.0
3632190	24ABC636A**30	CNPV*4824A**	58UVB120−20	33,800	13.0	16.0
3645019	24ABC636A**30	CNPV*4824A**	58VLR120−20	33,800	13.0	16.0
3645018	24ABC636A**30	CNPV*4824A**	58VMR120−20	33,600	13.0	16.0
3631836	24ABC636A**30	CNPV*4824A**+TDR		34,000	11.5	14.0
3630509	24ABC636A**30	CSPH*3612A**	58CV(A,X)070−12	33,400	12.5	15.5
3630570	24ABC636A**30	CSPH*3612A**	58CV(A,X)090−16	33,600	13.0	16.0
3630627	24ABC636A**30	CSPH*3612A**	58CV(A,X)110−20	33,600	13.0	16.0
3630686	24ABC636A**30	CSPH*3612A**	58CV(A,X)135−22	33,600	13.0	16.0
3630737	24ABC636A**30	CSPH*3612A**	58CV(A,X)155−22	33,800	13.0	16.0
3630775	24ABC636A**30	CSPH*3612A**	58HDV040−−12	33,400	12.0	14.5
3630785	24ABC636A**30	CSPH*3612A**	58HDV060−−12	33,800	12.0	15.0
3630788	24ABC636A**30	CSPH*3612A**	58HDV080−−20	34,200	12.5	15.0
3630798	24ABC636A**30	CSPH*3612A**	58HDV100−−20	34,000	12.5	15.5
3630856	24ABC636A**30	CSPH*3612A**	58ME(B,C)040−12	33,800	13.0	16.0
3630922	24ABC636A**30	CSPH*3612A**	58ME(B,C)060−12	33,800	12.5	15.5
3630984	24ABC636A**30	CSPH*3612A**	58ME(B,C)080−12	33,800	13.0	16.0
3631031	24ABC636A**30	CSPH*3612A**	58ME(B,C)080−16	33,800	12.5	15.5
3631070	24ABC636A**30	CSPH*3612A**	58ME(B,C)100−20	33,800	13.0	16.0
3631186	24ABC636A**30	CSPH*3612A**	58MV(B,C)060−14	33,800	12.5	15.5
3631236	24ABC636A**30	CSPH*3612A**	58MV(B,C)080−14	33,600	12.5	15.0
3631287	24ABC636A**30	CSPH*3612A**	58MV(B,C)080−20	33,600	12.5	15.5
3631351	24ABC636A**30	CSPH*3612A**	58MV(B,C)100−20	33,800	12.5	15.5
3631403	24ABC636A**30	CSPH*3612A**	58MV(B,C)120−20	33,600	13.0	16.0
3631451	24ABC636A**30	CSPH*3612A**	58MVB040−14	33,400	12.5	15.0
3631500	24ABC636A**30	CSPH*3612A**	58PH*045−08	33,600	12.0	14.5
3631534	24ABC636A**30	CSPH*3612A**	58PH*070−16	33,600	12.0	15.0
3631574	24ABC636A**30	CSPH*3612A**	58PH*090−16	33,800	13.0	16.0
3631626	24ABC636A**30	CSPH*3612A**	58PH*110−20	34,000	13.0	16.0
3645033	24ABC636A**30	CSPH*3612A**	58VLR105−12	33,800	12.5	15.5
3645035	24ABC636A**30	CSPH*3612A**	58VLR120−20	33,600	13.0	16.0
3645032	24ABC636A**30	CSPH*3612A**	58VMR105−12	33,400	12.5	15.5
3645034	24ABC636A**30	CSPH*3612A**	58VMR120−20	33,600	13.0	15.5
4744839	24ABC636A**30	CSPH*3612A**	59*N*A060V17**14	33,600	12.7	15.5

See notes on page 52

COMBINATION RATINGS

AHRI Ref. No.	Model Number	Indoor Model	Furnace Model	Capacity	EER	SEER
4744840	24ABC636A**30	CSPH*3612A**	59*N*A080V17**14	33,600	12.7	15.5
4744841	24ABC636A**30	CSPH*3612A**	59*N*A100V21**20	33,800	12.7	15.5
4744842	24ABC636A**30	CSPH*3612A**	59*N*A120V24**22	33,800	13.0	16.0
4744843	24ABC636A**30	CSPH*3612A**	59*P5A060E17**14	34,000	12.7	15.5
4744844	24ABC636A**30	CSPH*3612A**	59*P5A080E17**16	33,800	12.7	15.5
4137704	24ABC636A**30	CSPH*3612A**	OVLAAB036098	33,800	12.5	15.2
4137706	24ABC636A**30	CSPH*3612A**	OVLAAB048112	34,200	12.5	15.2
4137707	24ABC636A**30	CSPH*3612A**	OVLAAB060154	34,600	12.5	15.5
4137703	24ABC636A**30	CSPH*3612A**	OVMAAB036098	33,800	12.5	15.2
4137705	24ABC636A**30	CSPH*3612A**	OVMAAB042112	34,000	12.5	15.5
3631842	24ABC636A**30	CSPH*3612A**+TDR		33,800	11.5	14.0
3630510	24ABC636A**30	CSPH*4212A**	58CV(A,X)070−12	33,600	12.5	15.5
3630571	24ABC636A**30	CSPH*4212A**	58CV(A,X)090−16	33,800	13.0	16.0
3630628	24ABC636A**30	CSPH*4212A**	58CV(A,X)110−20	33,800	13.0	16.0
3630687	24ABC636A**30	CSPH*4212A**	58CV(A,X)135−22	33,800	13.0	16.0
3630738	24ABC636A**30	CSPH*4212A**	58CV(A,X)155−22	34,000	13.0	16.0
3630776	24ABC636A**30	CSPH*4212A**	58HDV040−−12	33,600	12.0	14.5
3630786	24ABC636A**30	CSPH*4212A**	58HDV060−−12	34,000	12.0	15.0
3630789	24ABC636A**30	CSPH*4212A**	58HDV080−−20	34,400	12.5	15.0
3630799	24ABC636A**30	CSPH*4212A**	58HDV100−−20	34,200	13.0	16.0
3630857	24ABC636A**30	CSPH*4212A**	58ME(B,C)040−12	34,000	13.0	16.0
3630923	24ABC636A**30	CSPH*4212A**	58ME(B,C)060−12	34,200	13.0	16.0
3630985	24ABC636A**30	CSPH*4212A**	58ME(B,C)080−12	34,000	13.0	16.0
3631032	24ABC636A**30	CSPH*4212A**	58ME(B,C)080−16	34,200	13.0	16.0
3631071	24ABC636A**30	CSPH*4212A**	58ME(B,C)100−20	34,000	13.0	16.0
3631187	24ABC636A**30	CSPH*4212A**	58MV(B,C)060−14	34,000	13.0	16.0
3631237	24ABC636A**30	CSPH*4212A**	58MV(B,C)080−14	33,800	12.5	15.5
3631288	24ABC636A**30	CSPH*4212A**	58MV(B,C)080−20	33,800	13.0	16.0
3631352	24ABC636A**30	CSPH*4212A**	58MV(B,C)100−20	33,800	13.0	16.0
3631404	24ABC636A**30	CSPH*4212A**	58MV(B,C)120−20	33,800	13.0	16.0
3631452	24ABC636A**30	CSPH*4212A**	58MVB040−14	33,600	12.5	15.5
3631501	24ABC636A**30	CSPH*4212A**	58PH*045−08	33,800	12.0	15.0
3631535	24ABC636A**30	CSPH*4212A**	58PH*070−16	33,800	12.5	15.0
3631575	24ABC636A**30	CSPH*4212A**	58PH*090−16	34,000	13.0	16.0
3631627	24ABC636A**30	CSPH*4212A**	58PH*110−20	34,200	13.0	16.0
3645037	24ABC636A**30	CSPH*4212A**	58VLR105−12	34,000	13.0	15.5
3645039	24ABC636A**30	CSPH*4212A**	58VLR120−20	33,800	13.0	16.0
3645036	24ABC636A**30	CSPH*4212A**	58VMR105−12	33,600	13.0	15.5
3645038	24ABC636A**30	CSPH*4212A**	58VMR120−20	33,600	13.0	15.5
4744845	24ABC636A**30	CSPH*4212A**	59*N*A060V17**14	33,800	12.7	15.5
4744846	24ABC636A**30	CSPH*4212A**	59*N*A080V17**14	33,800	12.7	15.5
4744847	24ABC636A**30	CSPH*4212A**	59*N*A100V21**20	34,000	13.0	16.0
4744848	24ABC636A**30	CSPH*4212A**	59*N*A120V24**22	34,000	13.0	16.0
4744849	24ABC636A**30	CSPH*4212A**	59*P5A060E17**14	34,200	12.7	15.5
4744850	24ABC636A**30	CSPH*4212A**	59*P5A080E17**16	34,000	12.7	15.5
4137709	24ABC636A**30	CSPH*4212A**	OVLAAB036098	34,000	12.5	15.2
4137711	24ABC636A**30	CSPH*4212A**	OVLAAB048112	34,400	12.5	15.5
4137712	24ABC636A**30	CSPH*4212A**	OVLAAB060154	34,600	13.0	16.0
4137708	24ABC636A**30	CSPH*4212A**	OVMAAB036098	34,000	12.5	15.2
4137710	24ABC636A**30	CSPH*4212A**	OVMAAB042112	34,200	12.5	15.5
3631843	24ABC636A**30	CSPH*4212A**+TDR		34,000	11.5	14.0
3630511	24ABC636A**30	CSPH*4812A**	58CV(A,X)070−12	33,800	12.5	15.5
3630572	24ABC636A**30	CSPH*4812A**	58CV(A,X)090−16	33,800	13.0	16.0
3630629	24ABC636A**30	CSPH*4812A**	58CV(A,X)110−20	34,000	13.0	16.0
3630688	24ABC636A**30	CSPH*4812A**	58CV(A,X)135−22	34,000	13.0	16.0
3630739	24ABC636A**30	CSPH*4812A**	58CV(A,X)155−22	34,000	13.0	16.0
3630858	24ABC636A**30	CSPH*4812A**	58ME(B,C)040−12	34,200	13.0	16.0
3630924	24ABC636A**30	CSPH*4812A**	58ME(B,C)060−12	34,200	13.0	16.0
3630986	24ABC636A**30	CSPH*4812A**	58ME(B,C)080−12	34,200	13.0	16.0
3631033	24ABC636A**30	CSPH*4812A**	58ME(B,C)080−16	34,200	13.0	16.0
3631072	24ABC636A**30	CSPH*4812A**	58ME(B,C)100−20	34,000	13.0	16.0
3631188	24ABC636A**30	CSPH*4812A**	58MV(B,C)060−14	34,000	13.0	16.0
3631238	24ABC636A**30	CSPH*4812A**	58MV(B,C)080−14	34,000	12.5	15.5
3631289	24ABC636A**30	CSPH*4812A**	58MV(B,C)080−20	33,800	13.0	16.0
3631353	24ABC636A**30	CSPH*4812A**	58MV(B,C)100−20	34,000	13.0	16.0
3631405	24ABC636A**30	CSPH*4812A**	58MV(B,C)120−20	34,000	13.0	16.0
3631453	24ABC636A**30	CSPH*4812A**	58MVB040−14	33,800	12.5	15.5
3631502	24ABC636A**30	CSPH*4812A**	58PH*045−08	34,000	12.0	15.0
3631536	24ABC636A**30	CSPH*4812A**	58PH*070−16	34,000	12.5	15.0
3631576	24ABC636A**30	CSPH*4812A**	58PH*090−16	34,200	13.0	16.0
3631628	24ABC636A**30	CSPH*4812A**	58PH*110−20	34,400	13.0	16.0
3645041	24ABC636A**30	CSPH*4812A**	58VLR105−12	34,000	13.0	15.5
3645043	24ABC636A**30	CSPH*4812A**	58VLR120−20	34,000	13.0	16.0

See notes on page 52

COMBINATION RATINGS

AHRI Ref. No.	Model Number	Indoor Model	Furnace Model	Capacity	EER	SEER
3645040	24ABC636A**30	CSPH*4812A**	58VMR105−12	33,600	13.0	15.5
3645042	24ABC636A**30	CSPH*4812A**	58VMR120−20	33,800	13.0	16.0
3631844	24ABC636A**30	CSPH*4812A**+TDR		34,200	11.5	14.0
3804404	24ABC636A**30	FB4CNF036		33,000	11.5	13.5
3693282	24ABC636A**30	FB4CNF036+TXV		33,000	12.0	14.5
3804405	24ABC636A**30	FB4CNF042		34,200	12.0	14.5
3693283	24ABC636A**30	FB4CNF042+TXV		34,200	12.5	15.5
3631710	24ABC636A**30	FE4AN(B,F)003+UI		33,200	13.0	16.0
3631713	24ABC636A**30	FE4AN(B,F)005+UI		34,200	13.0	16.0
3631716	24ABC636A**30	FE4ANB006+UI		34,600	13.5	16.5
3631723	24ABC636A**30	FE4ANF002+UI		33,000	12.0	15.0
3631748	24ABC636A**30	FE5ANB004+UI		34,600	13.5	16.5
3631762	24ABC636A**30	FF1ENP036		33,000	11.0	13.5
3631765	24ABC636A**30	FF1ENP037		33,200	11.5	14.0
3631806	24ABC636A**30	FV4CN(B,F)003		33,200	13.0	16.0
3631809	24ABC636A**30	FV4CN(B,F)005		34,200	13.0	16.0
3631812	24ABC636A**30	FV4CNB006		34,600	13.5	16.5
3631819	24ABC636A**30	FV4CNF002		33,000	12.0	15.0
3632301	24ABC636A**30	FX4DN(B,F)037		34,200	13.0	15.5
3632302	24ABC636A**30	FX4DN(B,F)043		34,200	13.0	15.5
3632304	24ABC636A**30	FX4DN(B,F)049		34,800	13.0	16.0
3804406	24ABC636A**30	FY5BNF036		33,200	11.5	13.5
3693295	24ABC636A**30	FY5BNF036+TXV		33,400	11.5	14.0
3804407	24ABC636A**30	FY5BNF042		33,800	11.5	13.5
3693296	24ABC636A**30	FY5BNF042+TXV		33,800	12.0	14.5
3632309	24ABC642A**30	†CNPV*4324A**+TDR		41,500	12.0	14.5
3630573	24ABC642A**30	CAP**4221A**	58CV(A,X)090−16	39,500	13.0	15.2
3630630	24ABC642A**30	CAP**4221A**	58CV(A,X)110−20	40,000	13.0	15.2
3630859	24ABC642A**30	CAP**4221A**	58ME(B,C)040−12	40,000	12.5	15.0
3630925	24ABC642A**30	CAP**4221A**	58ME(B,C)060−12	40,000	12.5	15.0
3630987	24ABC642A**30	CAP**4221A**	58ME(B,C)080−12	40,000	12.5	15.0
3631034	24ABC642A**30	CAP**4221A**	58ME(B,C)080−16	40,000	12.5	15.0
3631073	24ABC642A**30	CAP**4221A**	58ME(B,C)100−20	40,000	13.0	15.5
3631189	24ABC642A**30	CAP**4221A**	58MV(B,C)060−14	40,000	12.5	15.0
3631239	24ABC642A**30	CAP**4221A**	58MV(B,C)080−14	39,500	12.5	14.5
3631290	24ABC642A**30	CAP**4221A**	58MV(B,C)080−20	39,500	12.5	15.0
3631354	24ABC642A**30	CAP**4221A**	58MV(B,C)100−20	39,500	12.5	15.0
3631537	24ABC642A**30	CAP**4221A**	58PH*070−16	39,500	12.0	14.5
3631577	24ABC642A**30	CAP**4221A**	58PH*090−16	40,000	13.0	15.2
3631629	24ABC642A**30	CAP**4221A**	58PH*110−20	40,000	13.0	15.5
3631979	24ABC642A**30	CAP**4221A**	58UVB060−14	40,000	12.5	15.0
3632030	24ABC642A**30	CAP**4221A**	58UVB080−14	39,500	12.5	14.5
3632081	24ABC642A**30	CAP**4221A**	58UVB080−20	39,500	12.5	15.0
3632145	24ABC642A**30	CAP**4221A**	58UVB100−20	39,500	12.5	15.0
3645045	24ABC642A**30	CAP**4221A**	58VLR120−20	39,500	13.0	15.5
3645044	24ABC642A**30	CAP**4221A**	58VMR120−20	39,500	12.5	15.0
4744851	24ABC642A**30	CAP**4221A**	59*N*A060V17**14	39,000	12.5	15.0
4744852	24ABC642A**30	CAP**4221A**	59*N*A080V17**14	39,500	12.5	15.2
4744853	24ABC642A**30	CAP**4221A**	59*N*A100V21**20	39,500	12.7	15.5
4744854	24ABC642A**30	CAP**4221A**	59*P5A060E17**14	39,500	12.0	14.5
4744855	24ABC642A**30	CAP**4221A**	59*P5A080E17**16	40,000	12.5	15.0
4744856	24ABC642A**30	CAP**4221A**	59*P5A100E21**16	39,500	12.5	15.2
4137713	24ABC642A**30	CAP**4221A**	OVLAAB048112	40,000	12.0	14.5
3631862	24ABC642A**30	CAP**4221A**+TDR		40,000	11.5	14.0
3630631	24ABC642A**30	CAP**4224A**	58CV(A,X)110−20	40,000	13.0	15.5
3630689	24ABC642A**30	CAP**4224A**	58CV(A,X)135−22	40,000	13.0	15.5
3630740	24ABC642A**30	CAP**4224A**	58CV(A,X)155−22	40,000	13.0	16.0
3631074	24ABC642A**30	CAP**4224A**	58ME(B,C)100−20	40,000	13.0	15.5
3631109	24ABC642A**30	CAP**4224A**	58ME(B,C)120−20	40,000	13.0	15.5
3631240	24ABC642A**30	CAP**4224A**	58MV(B,C)080−14	39,500	12.5	15.0
3631291	24ABC642A**30	CAP**4224A**	58MV(B,C)080−20	39,500	12.5	15.0
3631355	24ABC642A**30	CAP**4224A**	58MV(B,C)100−20	39,500	12.5	15.0
3631406	24ABC642A**30	CAP**4224A**	58MV(B,C)120−20	39,500	13.0	15.2
3631454	24ABC642A**30	CAP**4224A**	58MVB040−14	39,500	12.5	15.0
3631578	24ABC642A**30	CAP**4224A**	58PH*090−16	40,000	13.0	15.5
3631630	24ABC642A**30	CAP**4224A**	58PH*110−20	40,000	13.0	15.5
3631665	24ABC642A**30	CAP**4224A**	58PH*135−20	40,000	13.0	15.5
3632031	24ABC642A**30	CAP**4224A**	58UVB080−14	39,500	12.5	15.0
3632082	24ABC642A**30	CAP**4224A**	58UVB080−20	39,500	12.5	15.0
3632146	24ABC642A**30	CAP**4224A**	58UVB100−20	39,500	12.5	15.0
3632197	24ABC642A**30	CAP**4224A**	58UVB120−20	39,500	13.0	15.2
3645047	24ABC642A**30	CAP**4224A**	58VLR120−20	39,500	13.0	15.5

See notes on page 52

COMBINATION RATINGS

AHRI Ref. No.	Model Number	Indoor Model	Furnace Model	Capacity	EER	SEER
3645046	24ABC642A**30	CAP**4224A**	58VMR120−20	39,500	12.5	15.0
4744857	24ABC642A**30	CAP**4224A**	59*N*A100V21**20	39,500	12.7	15.5
4744858	24ABC642A**30	CAP**4224A**	59*N*A120V24**22	39,500	12.7	15.5
4744859	24ABC642A**30	CAP**4224A**	59*P5A100E21**16	39,500	12.5	15.2
4744860	24ABC642A**30	CAP**4224A**	59*P5A120E24**22	40,000	12.7	15.5
3631863	24ABC642A**30	CAP**4224A**+TDR		40,000	11.5	14.0
3630512	24ABC642A**30	CAP**4817A**	58CV(A,X)070−12	40,500	12.5	15.0
3630574	24ABC642A**30	CAP**4817A**	58CV(A,X)090−16	40,500	13.0	15.5
3630860	24ABC642A**30	CAP**4817A**	58ME(B,C)040−12	41,000	13.0	15.2
3630926	24ABC642A**30	CAP**4817A**	58ME(B,C)060−12	41,000	13.0	15.2
3630988	24ABC642A**30	CAP**4817A**	58ME(B,C)080−12	41,000	13.0	15.5
3631035	24ABC642A**30	CAP**4817A**	58ME(B,C)080−16	40,500	13.0	15.5
3631190	24ABC642A**30	CAP**4817A**	58MV(B,C)060−14	41,000	13.0	15.2
3631538	24ABC642A**30	CAP**4817A**	58PH*070−16	40,500	12.0	14.5
3631980	24ABC642A**30	CAP**4817A**	58UVB060−14	41,000	13.0	15.2
4744861	24ABC642A**30	CAP**4817A**	59*N*A060V17**14	40,000	12.5	15.2
4744862	24ABC642A**30	CAP**4817A**	59*N*A080V17**14	40,000	12.7	15.5
4744863	24ABC642A**30	CAP**4817A**	59*P5A060E17**14	40,500	12.5	15.2
4744864	24ABC642A**30	CAP**4817A**	59*P5A080E17**16	40,500	12.5	15.2
4137714	24ABC642A**30	CAP**4817A**	OVMAAB042112	40,500	12.5	15.0
3631864	24ABC642A**30	CAP**4817A**+TDR		41,000	12.0	14.0
3630575	24ABC642A**30	CAP**4821A**	58CV(A,X)090−16	40,500	13.0	15.5
3630632	24ABC642A**30	CAP**4821A**	58CV(A,X)110−20	40,500	13.0	15.5
3630861	24ABC642A**30	CAP**4821A**	58ME(B,C)040−12	40,500	12.5	15.2
3630927	24ABC642A**30	CAP**4821A**	58ME(B,C)060−12	40,500	12.5	15.0
3630989	24ABC642A**30	CAP**4821A**	58ME(B,C)080−12	40,500	12.5	15.2
3631036	24ABC642A**30	CAP**4821A**	58ME(B,C)080−16	40,500	12.5	15.0
3631075	24ABC642A**30	CAP**4821A**	58ME(B,C)100−20	40,500	13.0	15.5
3631191	24ABC642A**30	CAP**4821A**	58MV(B,C)060−14	40,500	12.5	15.0
3631241	24ABC642A**30	CAP**4821A**	58MV(B,C)080−14	40,000	12.5	15.0
3631292	24ABC642A**30	CAP**4821A**	58MV(B,C)080−20	40,500	12.5	15.0
3631356	24ABC642A**30	CAP**4821A**	58MV(B,C)100−20	40,000	12.5	15.0
3631539	24ABC642A**30	CAP**4821A**	58PH*070−16	40,500	12.0	14.5
3631579	24ABC642A**30	CAP**4821A**	58PH*090−16	40,500	13.0	15.5
3631631	24ABC642A**30	CAP**4821A**	58PH*110−20	40,500	13.0	16.0
3631981	24ABC642A**30	CAP**4821A**	58UVB060−14	40,500	12.5	15.0
3632032	24ABC642A**30	CAP**4821A**	58UVB080−14	40,000	12.5	15.0
3632083	24ABC642A**30	CAP**4821A**	58UVB080−20	40,500	12.5	15.0
3632147	24ABC642A**30	CAP**4821A**	58UVB100−20	40,000	12.5	15.0
3645049	24ABC642A**30	CAP**4821A**	58VLR120−20	40,500	13.0	15.5
3645048	24ABC642A**30	CAP**4821A**	58VMR120−20	40,000	13.0	15.5
4744865	24ABC642A**30	CAP**4821A**	59*N*A060V17**14	40,000	12.5	15.0
4744866	24ABC642A**30	CAP**4821A**	59*N*A080V17**14	40,000	12.5	15.2
4744867	24ABC642A**30	CAP**4821A**	59*N*A100V21**20	40,000	12.7	15.5
4744868	24ABC642A**30	CAP**4821A**	59*P5A060E17**14	40,000	12.5	15.0
4744869	24ABC642A**30	CAP**4821A**	59*P5A080E17**16	40,500	12.5	15.2
4744870	24ABC642A**30	CAP**4821A**	59*P5A100E21**16	40,000	12.7	15.5
4137715	24ABC642A**30	CAP**4821A**	OVLAAB048112	40,500	12.5	14.5
3631865	24ABC642A**30	CAP**4821A**+TDR		40,500	12.0	14.0
3630790	24ABC642A**30	CAP**4823A**	58HDV080−−20	40,500	12.5	15.0
4744875	24ABC642A**30	CAP**4823A**	59*N*A100V21**20	40,000	12.7	15.5
4744876	24ABC642A**30	CAP**4823A**	59*N*A120V24**22	40,000	12.7	15.5
4744877	24ABC642A**30	CAP**4823A**	59*P5A100E21**16	40,000	12.7	15.5
4744878	24ABC642A**30	CAP**4823A**	59*P5A120E24**22	40,500	12.7	15.5
3631869	24ABC642A**30	CAP**4823A**+TDR		40,500	12.0	14.0
3630633	24ABC642A**30	CAP**4824A**	58CV(A,X)110−20	40,500	13.0	15.5
3630690	24ABC642A**30	CAP**4824A**	58CV(A,X)135−22	40,500	13.0	16.0
3630741	24ABC642A**30	CAP**4824A**	58CV(A,X)155−22	40,500	13.0	16.0
3631076	24ABC642A**30	CAP**4824A**	58ME(B,C)100−20	40,500	13.0	16.0
3631110	24ABC642A**30	CAP**4824A**	58ME(B,C)120−20	41,000	13.0	16.0
3631242	24ABC642A**30	CAP**4824A**	58MV(B,C)080−14	40,000	12.5	15.0
3631293	24ABC642A**30	CAP**4824A**	58MV(B,C)080−20	40,500	12.5	15.2
3631357	24ABC642A**30	CAP**4824A**	58MV(B,C)100−20	40,000	13.0	15.2
3631407	24ABC642A**30	CAP**4824A**	58MV(B,C)120−20	40,500	13.0	15.5
3631455	24ABC642A**30	CAP**4824A**	58MVB040−14	40,000	12.5	15.0
3631580	24ABC642A**30	CAP**4824A**	58PH*090−16	40,500	13.0	15.5
3631632	24ABC642A**30	CAP**4824A**	58PH*110−20	40,500	13.0	16.0
3631666	24ABC642A**30	CAP**4824A**	58PH*135−20	40,500	13.0	15.5
3632033	24ABC642A**30	CAP**4824A**	58UVB080−14	40,000	12.5	15.0
3632084	24ABC642A**30	CAP**4824A**	58UVB080−20	40,500	12.5	15.2
3632148	24ABC642A**30	CAP**4824A**	58UVB100−20	40,000	13.0	15.2
3632198	24ABC642A**30	CAP**4824A**	58UVB120−20	40,500	13.0	15.5
3645051	24ABC642A**30	CAP**4824A**	58VLR120−20	40,500	13.0	15.5

See notes on page 52

COMBINATION RATINGS

AHRI Ref. No.	Model Number	Indoor Model	Furnace Model	Capacity	EER	SEER
3645050	24ABC642A**30	CAP**4824A**	58VMR120−20	40,000	13.0	15.5
4744871	24ABC642A**30	CAP**4824A**	59*N*A100V21**20	40,000	12.7	15.5
4744872	24ABC642A**30	CAP**4824A**	59*N*A120V24**22	40,000	13.0	16.0
4744873	24ABC642A**30	CAP**4824A**	59*P5A100E21**16	40,500	12.7	15.5
4744874	24ABC642A**30	CAP**4824A**	59*P5A120E24**22	41,000	12.7	15.5
3631866	24ABC642A**30	CAP**4824A**+TDR		40,500	12.0	14.0
3630576	24ABC642A**30	CAP**6021A**	58CV(A,X)090−16	41,000	13.0	16.0
3630634	24ABC642A**30	CAP**6021A**	58CV(A,X)110−20	41,000	13.0	16.0
3630862	24ABC642A**30	CAP**6021A**	58ME(B,C)040−12	41,500	13.0	15.5
3630928	24ABC642A**30	CAP**6021A**	58ME(B,C)060−12	41,500	13.0	15.5
3630990	24ABC642A**30	CAP**6021A**	58ME(B,C)080−12	41,500	13.0	15.5
3631037	24ABC642A**30	CAP**6021A**	58ME(B,C)080−16	41,000	13.0	15.5
3631077	24ABC642A**30	CAP**6021A**	58ME(B,C)100−20	41,500	13.0	16.0
3631192	24ABC642A**30	CAP**6021A**	58MV(B,C)060−14	41,000	13.0	15.5
3631243	24ABC642A**30	CAP**6021A**	58MV(B,C)080−14	41,000	12.5	15.0
3631294	24ABC642A**30	CAP**6021A**	58MV(B,C)080−20	41,000	13.0	15.5
3631358	24ABC642A**30	CAP**6021A**	58MV(B,C)100−20	40,500	13.0	15.5
3631540	24ABC642A**30	CAP**6021A**	58PH*070−16	41,000	12.5	15.0
3631581	24ABC642A**30	CAP**6021A**	58PH*090−16	41,000	13.0	16.0
3631633	24ABC642A**30	CAP**6021A**	58PH*110−20	41,500	13.0	16.0
3631982	24ABC642A**30	CAP**6021A**	58UVB060−14	41,000	13.0	15.5
3632034	24ABC642A**30	CAP**6021A**	58UVB080−14	41,000	12.5	15.0
3632085	24ABC642A**30	CAP**6021A**	58UVB080−20	41,000	13.0	15.5
3632149	24ABC642A**30	CAP**6021A**	58UVB100−20	40,500	13.0	15.5
3645053	24ABC642A**30	CAP**6021A**	58VLR120−20	41,000	13.0	16.0
3645052	24ABC642A**30	CAP**6021A**	58VMR120−20	41,000	13.0	16.0
3631867	24ABC642A**30	CAP**6021A**+TDR		41,500	12.0	14.5
3630635	24ABC642A**30	CAP**6024A**	58CV(A,X)110−20	41,000	13.0	16.0
3630691	24ABC642A**30	CAP**6024A**	58CV(A,X)135−22	41,000	13.0	16.0
3630742	24ABC642A**30	CAP**6024A**	58CV(A,X)155−22	41,000	13.0	16.0
3631078	24ABC642A**30	CAP**6024A**	58ME(B,C)100−20	41,500	13.0	16.0
3631111	24ABC642A**30	CAP**6024A**	58ME(B,C)120−20	41,500	13.0	16.0
3631244	24ABC642A**30	CAP**6024A**	58MV(B,C)080−14	41,000	13.0	15.2
3631295	24ABC642A**30	CAP**6024A**	58MV(B,C)080−20	41,000	13.0	15.5
3631359	24ABC642A**30	CAP**6024A**	58MV(B,C)100−20	40,500	13.0	15.5
3631408	24ABC642A**30	CAP**6024A**	58MV(B,C)120−20	41,000	13.0	16.0
3631456	24ABC642A**30	CAP**6024A**	58MVB040−14	40,500	13.0	15.2
3631582	24ABC642A**30	CAP**6024A**	58PH*090−16	41,000	13.0	16.0
3631634	24ABC642A**30	CAP**6024A**	58PH*110−20	41,500	13.0	16.0
3631667	24ABC642A**30	CAP**6024A**	58PH*135−20	41,500	13.0	16.0
3632035	24ABC642A**30	CAP**6024A**	58UVB080−14	41,000	13.0	15.2
3632086	24ABC642A**30	CAP**6024A**	58UVB080−20	41,000	13.0	15.5
3632150	24ABC642A**30	CAP**6024A**	58UVB100−20	40,500	13.0	15.5
3632199	24ABC642A**30	CAP**6024A**	58UVB120−20	41,000	13.0	16.0
3645055	24ABC642A**30	CAP**6024A**	58VLR120−20	41,000	13.0	16.0
3645054	24ABC642A**30	CAP**6024A**	58VMR120−20	41,000	13.0	16.0
3631868	24ABC642A**30	CAP**6024A**+TDR		41,500	12.0	14.5
3630791	24ABC642A**30	CAP**6025A**	58HDV080−−20	41,500	13.0	15.0
3630800	24ABC642A**30	CAP**6025A**	58HDV100−−20	41,500	13.0	15.5
3631870	24ABC642A**30	CAP**6025A**+TDR		41,500	12.0	14.5
3630514	24ABC642A**30	CNPH*4221A**	58CV(A,X)070−12	39,500	12.5	14.5
3630580	24ABC642A**30	CNPH*4221A**	58CV(A,X)090−16	40,000	12.5	15.0
3630640	24ABC642A**30	CNPH*4221A**	58CV(A,X)110−20	40,000	12.5	15.0
3630694	24ABC642A**30	CNPH*4221A**	58CV(A,X)135−22	40,000	13.0	15.5
3630745	24ABC642A**30	CNPH*4221A**	58CV(A,X)155−22	40,000	13.0	15.5
4137716	24ABC642A**30	CNPH*4221A**	58HDV060−−12	40,000	12.0	14.5
4137717	24ABC642A**30	CNPH*4221A**	58HDV080−−20	40,000	12.0	14.5
4137718	24ABC642A**30	CNPH*4221A**	58HDV100−−20	40,000	12.5	15.2
3630866	24ABC642A**30	CNPH*4221A**	58ME(B,C)040−12	40,000	12.5	15.0
3630932	24ABC642A**30	CNPH*4221A**	58ME(B,C)060−12	40,000	12.5	15.0
3630994	24ABC642A**30	CNPH*4221A**	58ME(B,C)080−12	40,000	12.5	15.0
3631041	24ABC642A**30	CNPH*4221A**	58ME(B,C)080−16	40,000	12.5	15.0
3631083	24ABC642A**30	CNPH*4221A**	58ME(B,C)100−20	40,000	13.0	15.5
3631114	24ABC642A**30	CNPH*4221A**	58ME(B,C)120−20	40,000	13.0	15.5
3631196	24ABC642A**30	CNPH*4221A**	58MV(B,C)060−14	40,000	12.5	15.0
3631249	24ABC642A**30	CNPH*4221A**	58MV(B,C)080−14	39,500	12.0	14.5
3631300	24ABC642A**30	CNPH*4221A**	58MV(B,C)080−20	39,500	12.5	14.5
3631364	24ABC642A**30	CNPH*4221A**	58MV(B,C)100−20	39,500	12.5	15.0
3631411	24ABC642A**30	CNPH*4221A**	58MV(B,C)120−20	40,000	12.5	15.0
3631459	24ABC642A**30	CNPH*4221A**	58MVB040−14	39,500	12.5	14.5
3631544	24ABC642A**30	CNPH*4221A**	58PH*070−16	39,500	12.0	14.5
3631587	24ABC642A**30	CNPH*4221A**	58PH*090−16	40,000	12.5	15.0
3631639	24ABC642A**30	CNPH*4221A**	58PH*110−20	40,000	13.0	15.5

See notes on page 52

COMBINATION RATINGS

AHRI Ref. No.	Model Number	Indoor Model	Furnace Model	Capacity	EER	SEER
3631670	24ABC642A**30	CNPH*4221A**	58PH*135−20	40,000	12.5	15.0
3645067	24ABC642A**30	CNPH*4221A**	58VLR120−20	40,000	12.5	15.0
3645066	24ABC642A**30	CNPH*4221A**	58VMR120−20	39,500	12.5	15.0
4744903	24ABC642A**30	CNPH*4221A**	59*N*A060V17**14	39,500	12.0	14.5
4744904	24ABC642A**30	CNPH*4221A**	59*N*A080V17**14	39,500	12.5	15.0
4744905	24ABC642A**30	CNPH*4221A**	59*N*A100V21**20	39,500	12.5	15.2
4744906	24ABC642A**30	CNPH*4221A**	59*N*A120V24**22	39,500	12.7	15.5
4744907	24ABC642A**30	CNPH*4221A**	59*P5A060E17**14	39,500	12.0	14.5
4744908	24ABC642A**30	CNPH*4221A**	59*P5A080E17**16	40,000	12.5	15.0
4744909	24ABC642A**30	CNPH*4221A**	59*P5A100E21**16	39,500	12.5	15.2
4744910	24ABC642A**30	CNPH*4221A**	59*P5A120E24**22	40,000	12.7	15.5
4137744	24ABC642A**30	CNPH*4221A**	OVLAAB048112	40,000	12.0	14.5
4137745	24ABC642A**30	CNPH*4221A**	OVLAAB060154	40,500	12.0	14.5
4137743	24ABC642A**30	CNPH*4221A**	OVMAAB042112	39,500	12.0	14.5
3631876	24ABC642A**30	CNPH*4221A**+TDR		40,000	12.0	14.0
3632249	24ABC642A**30	CNPH*4321A**	58CV(A,X)070−12	40,500	12.5	15.0
3632252	24ABC642A**30	CNPH*4321A**	58CV(A,X)090−16	41,000	13.0	16.0
3632254	24ABC642A**30	CNPH*4321A**	58CV(A,X)110−20	41,000	13.0	16.0
3632256	24ABC642A**30	CNPH*4321A**	58CV(A,X)135−22	41,000	13.0	16.0
3632258	24ABC642A**30	CNPH*4321A**	58CV(A,X)155−22	41,000	13.0	16.0
4137719	24ABC642A**30	CNPH*4321A**	58HDV060−−12	41,500	12.5	15.0
4137720	24ABC642A**30	CNPH*4321A**	58HDV080−−20	41,500	12.5	15.5
4137721	24ABC642A**30	CNPH*4321A**	58HDV100−−20	41,500	12.5	15.5
3632261	24ABC642A**30	CNPH*4321A**	58ME(B,C)040−12	41,500	13.0	15.5
3632264	24ABC642A**30	CNPH*4321A**	58ME(B,C)060−12	41,500	13.0	15.5
3632265	24ABC642A**30	CNPH*4321A**	58ME(B,C)080−12	41,500	13.0	15.5
3632266	24ABC642A**30	CNPH*4321A**	58ME(B,C)080−16	41,000	13.0	15.5
3632269	24ABC642A**30	CNPH*4321A**	58ME(B,C)100−20	41,500	13.0	16.0
3632271	24ABC642A**30	CNPH*4321A**	58ME(B,C)120−20	41,500	13.0	16.0
3632274	24ABC642A**30	CNPH*4321A**	58MV(B,C)060−14	41,000	13.0	15.5
3632276	24ABC642A**30	CNPH*4321A**	58MV(B,C)080−14	41,000	12.5	15.0
3632278	24ABC642A**30	CNPH*4321A**	58MV(B,C)080−20	41,000	13.0	15.5
3632280	24ABC642A**30	CNPH*4321A**	58MV(B,C)100−20	40,500	13.0	15.5
3632282	24ABC642A**30	CNPH*4321A**	58MV(B,C)120−20	41,000	13.0	16.0
3632284	24ABC642A**30	CNPH*4321A**	58MVB040−14	40,500	12.5	15.0
3632287	24ABC642A**30	CNPH*4321A**	58PH*070−16	41,000	12.5	15.0
3632289	24ABC642A**30	CNPH*4321A**	58PH*090−16	41,000	13.0	16.0
3632291	24ABC642A**30	CNPH*4321A**	58PH*110−20	41,500	13.0	16.0
3632293	24ABC642A**30	CNPH*4321A**	58PH*135−20	41,000	13.0	16.0
3645069	24ABC642A**30	CNPH*4321A**	58VLR120−20	41,000	13.0	16.0
3645068	24ABC642A**30	CNPH*4321A**	58VMR120−20	41,000	13.0	16.0
4744911	24ABC642A**30	CNPH*4321A**	59*N*A060V17**14	40,500	12.5	15.2
4744912	24ABC642A**30	CNPH*4321A**	59*N*A080V17**14	40,500	12.7	15.5
4744913	24ABC642A**30	CNPH*4321A**	59*N*A100V21**20	40,500	12.7	15.5
4744914	24ABC642A**30	CNPH*4321A**	59*N*A120V24**22	40,500	13.0	16.0
4744915	24ABC642A**30	CNPH*4321A**	59*P5A060E17**14	41,000	12.5	15.2
4744916	24ABC642A**30	CNPH*4321A**	59*P5A080E17**16	41,000	12.7	15.5
4744917	24ABC642A**30	CNPH*4321A**	59*P5A100E21**16	41,000	12.7	15.5
4744918	24ABC642A**30	CNPH*4321A**	59*P5A120E24**22	41,500	13.0	16.0
4137747	24ABC642A**30	CNPH*4321A**	OVLAAB048112	41,000	12.5	15.0
4137748	24ABC642A**30	CNPH*4321A**	OVLAAB060154	42,000	12.5	15.5
4137746	24ABC642A**30	CNPH*4321A**	OVMAAB042112	41,000	12.5	15.2
3632310	24ABC642A**30	CNPH*4321A**+TDR		41,500	12.0	14.5
3630515	24ABC642A**30	CNPH*4821A**	58CV(A,X)070−12	40,500	12.5	15.0
3630581	24ABC642A**30	CNPH*4821A**	58CV(A,X)090−16	40,500	13.0	15.5
3630641	24ABC642A**30	CNPH*4821A**	58CV(A,X)110−20	40,500	13.0	16.0
3630695	24ABC642A**30	CNPH*4821A**	58CV(A,X)135−22	40,500	13.0	16.0
3630746	24ABC642A**30	CNPH*4821A**	58CV(A,X)155−22	40,500	13.0	16.0
4137722	24ABC642A**30	CNPH*4821A**	58HDV060−−12	41,000	12.0	14.5
4137723	24ABC642A**30	CNPH*4821A**	58HDV080−−20	41,000	12.5	15.2
4137724	24ABC642A**30	CNPH*4821A**	58HDV100−−20	41,000	12.5	15.5
3630867	24ABC642A**30	CNPH*4821A**	58ME(B,C)040−12	41,000	13.0	15.2
3630933	24ABC642A**30	CNPH*4821A**	58ME(B,C)060−12	41,000	12.5	15.0
3630995	24ABC642A**30	CNPH*4821A**	58ME(B,C)080−12	41,000	13.0	15.5
3631042	24ABC642A**30	CNPH*4821A**	58ME(B,C)080−16	40,500	13.0	15.5
3631084	24ABC642A**30	CNPH*4821A**	58ME(B,C)100−20	41,000	13.0	16.0
3631115	24ABC642A**30	CNPH*4821A**	58ME(B,C)120−20	41,000	13.0	16.0
3631197	24ABC642A**30	CNPH*4821A**	58MV(B,C)060−14	40,500	13.0	15.5
3631250	24ABC642A**30	CNPH*4821A**	58MV(B,C)080−14	40,500	12.5	15.0
3631301	24ABC642A**30	CNPH*4821A**	58MV(B,C)080−20	40,500	12.5	15.2
3631365	24ABC642A**30	CNPH*4821A**	58MV(B,C)100−20	40,000	13.0	15.5
3631412	24ABC642A**30	CNPH*4821A**	58MV(B,C)120−20	40,500	13.0	15.5
3631460	24ABC642A**30	CNPH*4821A**	58MVB040−14	40,000	12.5	15.0

See notes on page 52

COMBINATION RATINGS

AHRI Ref. No.	Model Number	Indoor Model	Furnace Model	Capacity	EER	SEER
3631545	24ABC642A**30	CNPH*4821A**	58PH*070−16	40,500	12.0	14.5
3631588	24ABC642A**30	CNPH*4821A**	58PH*090−16	40,500	13.0	15.5
3631640	24ABC642A**30	CNPH*4821A**	58PH*110−20	41,000	13.0	16.0
3631671	24ABC642A**30	CNPH*4821A**	58PH*135−20	41,000	13.0	16.0
3645071	24ABC642A**30	CNPH*4821A**	58VLR120−20	40,500	13.0	16.0
3645070	24ABC642A**30	CNPH*4821A**	58VMR120−20	40,500	13.0	15.5
4744919	24ABC642A**30	CNPH*4821A**	59*N*A060V17**14	40,000	12.5	15.2
4744920	24ABC642A**30	CNPH*4821A**	59*N*A080V17**14	40,000	12.7	15.5
4744921	24ABC642A**30	CNPH*4821A**	59*N*A100V21**20	40,000	12.7	15.5
4744922	24ABC642A**30	CNPH*4821A**	59*N*A120V24**22	40,000	13.0	16.0
4744923	24ABC642A**30	CNPH*4821A**	59*P5A060E17**14	40,500	12.5	15.2
4744924	24ABC642A**30	CNPH*4821A**	59*P5A080E17**16	40,500	12.5	15.2
4744925	24ABC642A**30	CNPH*4821A**	59*P5A100E21**16	40,500	12.7	15.5
4744926	24ABC642A**30	CNPH*4821A**	59*P5A120E24**22	41,000	12.7	15.5
4137750	24ABC642A**30	CNPH*4821A**	OVLAAB048112	40,500	12.0	14.5
4137751	24ABC642A**30	CNPH*4821A**	OVLAAB060154	41,500	12.5	15.2
4137749	24ABC642A**30	CNPH*4821A**	OVMAAB042112	40,500	12.5	15.2
3631877	24ABC642A**30	CNPH*4821A**+TDR		41,000	12.0	14.0
3630516	24ABC642A**30	CNPH*6024A**	58CV(A,X)070−12	41,000	13.0	15.2
3630582	24ABC642A**30	CNPH*6024A**	58CV(A,X)090−16	41,000	13.0	16.0
3630642	24ABC642A**30	CNPH*6024A**	58CV(A,X)110−20	41,000	13.0	16.0
3630696	24ABC642A**30	CNPH*6024A**	58CV(A,X)135−22	41,000	13.0	16.0
3630747	24ABC642A**30	CNPH*6024A**	58CV(A,X)155−22	41,000	13.0	16.0
3630868	24ABC642A**30	CNPH*6024A**	58ME(B,C)040−12	41,500	13.0	15.5
3630934	24ABC642A**30	CNPH*6024A**	58ME(B,C)060−12	41,500	13.0	15.5
3630996	24ABC642A**30	CNPH*6024A**	58ME(B,C)080−12	41,500	13.0	15.5
3631043	24ABC642A**30	CNPH*6024A**	58ME(B,C)080−16	41,000	13.0	15.5
3631085	24ABC642A**30	CNPH*6024A**	58ME(B,C)100−20	41,500	13.0	16.0
3631116	24ABC642A**30	CNPH*6024A**	58ME(B,C)120−20	41,500	13.0	16.0
3631198	24ABC642A**30	CNPH*6024A**	58MV(B,C)060−14	41,000	13.0	15.5
3631251	24ABC642A**30	CNPH*6024A**	58MV(B,C)080−14	41,000	13.0	15.5
3631302	24ABC642A**30	CNPH*6024A**	58MV(B,C)080−20	41,000	13.0	15.5
3631366	24ABC642A**30	CNPH*6024A**	58MV(B,C)100−20	40,500	13.0	15.5
3631413	24ABC642A**30	CNPH*6024A**	58MV(B,C)120−20	41,000	13.0	16.0
3631461	24ABC642A**30	CNPH*6024A**	58MVB040−14	40,500	13.0	15.5
3631546	24ABC642A**30	CNPH*6024A**	58PH*070−16	41,000	12.5	14.5
3631589	24ABC642A**30	CNPH*6024A**	58PH*090−16	41,500	13.0	16.0
3631641	24ABC642A**30	CNPH*6024A**	58PH*110−20	41,500	13.0	16.0
3631672	24ABC642A**30	CNPH*6024A**	58PH*135−20	41,500	13.0	16.0
3645073	24ABC642A**30	CNPH*6024A**	58VLR120−20	41,000	13.0	16.0
3645072	24ABC642A**30	CNPH*6024A**	58VMR120−20	41,000	13.0	16.0
3631879	24ABC642A**30	CNPH*6024A**		41,500	12.0	14.5
3631878	24ABC642A**30	CNPH*6024A**+TDR		41,500	12.0	14.0
3630513	24ABC642A**30	CNPV*4217A**	58CV(A,X)070−12	40,000	12.5	14.5
3630577	24ABC642A**30	CNPV*4217A**	58CV(A,X)090−16	40,000	12.5	15.2
4137731	24ABC642A**30	CNPV*4217A**	58HDV060−−12	40,000	12.0	14.5
3630863	24ABC642A**30	CNPV*4217A**	58ME(B,C)040−12	40,500	12.5	15.0
3630929	24ABC642A**30	CNPV*4217A**	58ME(B,C)060−12	40,500	12.5	15.0
3630991	24ABC642A**30	CNPV*4217A**	58ME(B,C)080−12	40,500	12.5	15.0
3631038	24ABC642A**30	CNPV*4217A**	58ME(B,C)080−16	40,000	12.5	15.0
3631193	24ABC642A**30	CNPV*4217A**	58MV(B,C)060−14	40,500	12.5	15.0
3631541	24ABC642A**30	CNPV*4217A**	58PH*070−16	40,000	12.0	14.5
3631983	24ABC642A**30	CNPV*4217A**	58UVB060−14	40,500	12.5	15.0
4744879	24ABC642A**30	CNPV*4217A**	59*N*A060V17**14	39,500	12.5	15.0
4744880	24ABC642A**30	CNPV*4217A**	59*N*A080V17**14	39,500	12.5	15.2
4744881	24ABC642A**30	CNPV*4217A**	59*P5A060E17**14	40,000	12.5	15.0
4744882	24ABC642A**30	CNPV*4217A**	59*P5A080E17**16	40,000	12.5	15.0
4137732	24ABC642A**30	CNPV*4217A**	OVMAAB042112	40,000	12.0	14.5
3631871	24ABC642A**30	CNPV*4217A**+TDR		40,500	12.0	14.0
3630578	24ABC642A**30	CNPV*4221A**	58CV(A,X)090−16	40,000	12.5	15.0
3630636	24ABC642A**30	CNPV*4221A**	58CV(A,X)110−20	40,000	12.5	15.0
4137725	24ABC642A**30	CNPV*4221A**	58HDV060−−12	40,000	12.0	14.5
4137733	24ABC642A**30	CNPV*4221A**	58HDV080−−20	40,000	12.0	14.5
3630864	24ABC642A**30	CNPV*4221A**	58ME(B,C)040−12	40,000	12.5	15.0
3630930	24ABC642A**30	CNPV*4221A**	58ME(B,C)060−12	40,000	12.5	15.0
3630992	24ABC642A**30	CNPV*4221A**	58ME(B,C)080−12	40,000	12.5	15.0
3631039	24ABC642A**30	CNPV*4221A**	58ME(B,C)080−16	40,000	12.5	15.0
3631079	24ABC642A**30	CNPV*4221A**	58ME(B,C)100−20	40,000	13.0	15.5
3631194	24ABC642A**30	CNPV*4221A**	58MV(B,C)060−14	40,000	12.5	15.0
3631245	24ABC642A**30	CNPV*4221A**	58MV(B,C)080−14	39,500	12.0	14.5
3631296	24ABC642A**30	CNPV*4221A**	58MV(B,C)080−20	39,500	12.5	14.5
3631360	24ABC642A**30	CNPV*4221A**	58MV(B,C)100−20	39,500	12.5	15.0
3631542	24ABC642A**30	CNPV*4221A**	58PH*070−16	39,500	12.0	14.5

See notes on page 52

COMBINATION RATINGS

AHRI Ref. No.	Model Number	Indoor Model	Furnace Model	Capacity	EER	SEER
3631583	24ABC642A**30	CNPV*4221A**	58PH*090−16	40,000	12.5	15.0
3631635	24ABC642A**30	CNPV*4221A**	58PH*110−20	40,000	13.0	15.5
3631984	24ABC642A**30	CNPV*4221A**	58UVB060−14	40,000	12.5	15.0
3632036	24ABC642A**30	CNPV*4221A**	58UVB080−14	39,500	12.0	14.5
3632087	24ABC642A**30	CNPV*4221A**	58UVB080−20	39,500	12.5	14.5
3632151	24ABC642A**30	CNPV*4221A**	58UVB100−20	39,500	12.5	15.0
3645057	24ABC642A**30	CNPV*4221A**	58VLR120−20	40,000	12.5	15.0
3645056	24ABC642A**30	CNPV*4221A**	58VMR120−20	39,500	12.5	15.0
4744883	24ABC642A**30	CNPV*4221A**	59*N*A060V17**14	39,500	12.0	14.5
4744884	24ABC642A**30	CNPV*4221A**	59*N*A080V17**14	39,500	12.5	15.0
4744885	24ABC642A**30	CNPV*4221A**	59*N*A100V21**20	39,500	12.5	15.2
4744886	24ABC642A**30	CNPV*4221A**	59*P5A060E17**14	39,500	12.0	14.5
4744887	24ABC642A**30	CNPV*4221A**	59*P5A080E17**16	40,000	12.5	15.0
4744888	24ABC642A**30	CNPV*4221A**	59*P5A100E21**16	39,500	12.5	15.2
4137735	24ABC642A**30	CNPV*4221A**	OVLAAB048112	40,000	12.0	14.5
4137734	24ABC642A**30	CNPV*4221A**	OVMAAB042112	39,500	12.0	14.5
3631872	24ABC642A**30	CNPV*4221A**+TDR		40,000	12.0	14.0
3632253	24ABC642A**30	CNPV*4324A**	58CV(A,X)110−20	41,000	13.0	16.0
3632255	24ABC642A**30	CNPV*4324A**	58CV(A,X)135−22	41,000	13.0	16.0
3632257	24ABC642A**30	CNPV*4324A**	58CV(A,X)155−22	41,000	13.0	16.0
4137726	24ABC642A**30	CNPV*4324A**	58HDV080−−20	41,500	12.5	15.5
4137727	24ABC642A**30	CNPV*4324A**	58HDV100−−20	41,500	13.0	16.0
3632267	24ABC642A**30	CNPV*4324A**	58ME(B,C)100−20	41,500	13.0	16.0
3632270	24ABC642A**30	CNPV*4324A**	58ME(B,C)120−20	41,500	13.0	16.0
3632275	24ABC642A**30	CNPV*4324A**	58MV(B,C)080−14	41,000	13.0	15.5
3632277	24ABC642A**30	CNPV*4324A**	58MV(B,C)080−20	41,000	13.0	15.5
3632279	24ABC642A**30	CNPV*4324A**	58MV(B,C)100−20	40,500	13.0	16.0
3632281	24ABC642A**30	CNPV*4324A**	58MV(B,C)120−20	41,000	13.0	16.0
3632283	24ABC642A**30	CNPV*4324A**	58MVB040−14	40,500	13.0	15.5
3632288	24ABC642A**30	CNPV*4324A**	58PH*090−16	41,500	13.0	16.0
3632290	24ABC642A**30	CNPV*4324A**	58PH*110−20	41,500	13.0	16.0
3632292	24ABC642A**30	CNPV*4324A**	58PH*135−20	41,500	13.0	16.0
3632319	24ABC642A**30	CNPV*4324A**	58UVB080−14	41,000	13.0	15.5
3632321	24ABC642A**30	CNPV*4324A**	58UVB080−20	41,000	13.0	15.5
3632323	24ABC642A**30	CNPV*4324A**	58UVB100−20	40,500	13.0	16.0
3632325	24ABC642A**30	CNPV*4324A**	58UVB120−20	41,000	13.0	16.0
3645059	24ABC642A**30	CNPV*4324A**	58VLR120−20	41,000	13.0	16.0
3645058	24ABC642A**30	CNPV*4324A**	58VMR120−20	41,000	13.0	16.0
4744889	24ABC642A**30	CNPV*4324A**	59*N*A100V21**20	40,500	13.0	16.0
4744890	24ABC642A**30	CNPV*4324A**	59*N*A120V24**22	41,000	13.0	16.0
4744891	24ABC642A**30	CNPV*4324A**	59*P5A100E21**16	41,000	12.7	15.5
4744892	24ABC642A**30	CNPV*4324A**	59*P5A120E24**22	41,500	13.0	16.0
4137736	24ABC642A**30	CNPV*4324A**	OVLAAB048112	41,000	12.5	15.2
4137737	24ABC642A**30	CNPV*4324A**	OVLAAB060154	42,000	12.5	15.5
3630579	24ABC642A**30	CNPV*4821A**	58CV(A,X)090−16	40,500	13.0	15.5
3630637	24ABC642A**30	CNPV*4821A**	58CV(A,X)110−20	40,500	13.0	16.0
4137728	24ABC642A**30	CNPV*4821A**	58HDV060−−12	41,000	12.0	14.5
4137738	24ABC642A**30	CNPV*4821A**	58HDV080−−20	41,000	12.5	15.0
3630865	24ABC642A**30	CNPV*4821A**	58ME(B,C)040−12	41,000	13.0	15.2
3630931	24ABC642A**30	CNPV*4821A**	58ME(B,C)060−12	41,000	13.0	15.2
3630993	24ABC642A**30	CNPV*4821A**	58ME(B,C)080−12	41,000	13.0	15.5
3631040	24ABC642A**30	CNPV*4821A**	58ME(B,C)080−16	40,500	13.0	15.5
3631080	24ABC642A**30	CNPV*4821A**	58ME(B,C)100−20	41,000	13.0	16.0
3631195	24ABC642A**30	CNPV*4821A**	58MV(B,C)060−14	40,500	13.0	15.5
3631246	24ABC642A**30	CNPV*4821A**	58MV(B,C)080−14	40,500	12.5	15.0
3631297	24ABC642A**30	CNPV*4821A**	58MV(B,C)080−20	40,500	13.0	15.2
3631361	24ABC642A**30	CNPV*4821A**	58MV(B,C)100−20	40,000	13.0	15.5
3631543	24ABC642A**30	CNPV*4821A**	58PH*070−16	40,500	12.0	14.5
3631584	24ABC642A**30	CNPV*4821A**	58PH*090−16	40,500	13.0	15.5
3631636	24ABC642A**30	CNPV*4821A**	58PH*110−20	41,000	13.0	16.0
3631985	24ABC642A**30	CNPV*4821A**	58UVB060−14	40,500	13.0	15.5
3632037	24ABC642A**30	CNPV*4821A**	58UVB080−14	40,500	12.5	15.0
3632088	24ABC642A**30	CNPV*4821A**	58UVB080−20	40,500	13.0	15.2
3632152	24ABC642A**30	CNPV*4821A**	58UVB100−20	40,000	13.0	15.5
3645061	24ABC642A**30	CNPV*4821A**	58VLR120−20	40,500	13.0	16.0
3645060	24ABC642A**30	CNPV*4821A**	58VMR120−20	40,500	13.0	15.5
4744893	24ABC642A**30	CNPV*4821A**	59*N*A060V17**14	40,000	12.5	15.2
4744894	24ABC642A**30	CNPV*4821A**	59*N*A080V17**14	40,000	12.7	15.5
4744895	24ABC642A**30	CNPV*4821A**	59*N*A100V21**20	40,000	12.7	15.5
4744896	24ABC642A**30	CNPV*4821A**	59*P5A060E17**14	40,500	12.5	15.2
4744897	24ABC642A**30	CNPV*4821A**	59*P5A080E17**16	40,500	12.5	15.2
4744898	24ABC642A**30	CNPV*4821A**	59*P5A100E21**16	40,500	12.7	15.5
4137740	24ABC642A**30	CNPV*4821A**	OVLAAB048112	40,500	12.0	14.5

See notes on page 52

COMBINATION RATINGS

AHRI Ref. No.	Model Number	Indoor Model	Furnace Model	Capacity	EER	SEER
4137739	24ABC642A**30	CNPV*4821A**	OVMAAB042112	40,500	12.5	15.2
3631873	24ABC642A**30	CNPV*4821A**+TDR		41,000	12.0	14.0
3630638	24ABC642A**30	CNPV*4824A**	58CV(A,X)110−20	40,500	13.0	16.0
3630692	24ABC642A**30	CNPV*4824A**	58CV(A,X)135−22	40,500	13.0	16.0
3630743	24ABC642A**30	CNPV*4824A**	58CV(A,X)155−22	40,500	13.0	16.0
4137729	24ABC642A**30	CNPV*4824A**	58HDV080−−20	41,000	12.5	15.2
4137730	24ABC642A**30	CNPV*4824A**	58HDV100−−20	41,000	12.5	15.5
3631081	24ABC642A**30	CNPV*4824A**	58ME(B,C)100−20	41,000	13.0	16.0
3631112	24ABC642A**30	CNPV*4824A**	58ME(B,C)120−20	41,000	13.0	16.0
3631247	24ABC642A**30	CNPV*4824A**	58MV(B,C)080−14	40,500	12.5	15.0
3631298	24ABC642A**30	CNPV*4824A**	58MV(B,C)080−20	40,500	13.0	15.2
3631362	24ABC642A**30	CNPV*4824A**	58MV(B,C)100−20	40,000	13.0	15.5
3631409	24ABC642A**30	CNPV*4824A**	58MV(B,C)120−20	40,500	13.0	15.5
3631457	24ABC642A**30	CNPV*4824A**	58MVB040−14	40,000	12.5	15.0
3631585	24ABC642A**30	CNPV*4824A**	58PH*090−16	40,500	13.0	16.0
3631637	24ABC642A**30	CNPV*4824A**	58PH*110−20	41,000	13.0	16.0
3631668	24ABC642A**30	CNPV*4824A**	58PH*135−20	41,000	13.0	16.0
3632038	24ABC642A**30	CNPV*4824A**	58UVB080−14	40,500	12.5	15.0
3632089	24ABC642A**30	CNPV*4824A**	58UVB080−20	40,500	13.0	15.2
3632153	24ABC642A**30	CNPV*4824A**	58UVB100−20	40,000	13.0	15.5
3632200	24ABC642A**30	CNPV*4824A**	58UVB120−20	40,500	13.0	15.5
3645063	24ABC642A**30	CNPV*4824A**	58VLR120−20	40,500	13.0	16.0
3645062	24ABC642A**30	CNPV*4824A**	58VMR120−20	40,500	13.0	15.5
4744899	24ABC642A**30	CNPV*4824A**	59*N*A100V21**20	40,000	12.7	15.5
4744900	24ABC642A**30	CNPV*4824A**	59*N*A120V24**22	40,000	13.0	16.0
4744901	24ABC642A**30	CNPV*4824A**	59*P5A100E21**16	40,500	12.7	15.5
4744902	24ABC642A**30	CNPV*4824A**	59*P5A120E24**22	41,000	12.7	15.5
4137741	24ABC642A**30	CNPV*4824A**	OVLAAB048112	40,500	12.0	14.5
4137742	24ABC642A**30	CNPV*4824A**	OVLAAB060154	41,500	12.5	15.2
3631874	24ABC642A**30	CNPV*4824A**+TDR		41,000	12.0	14.0
3630639	24ABC642A**30	CNPV*6024A**	58CV(A,X)110−20	41,000	13.0	16.0
3630693	24ABC642A**30	CNPV*6024A**	58CV(A,X)135−22	41,000	13.0	16.0
3630744	24ABC642A**30	CNPV*6024A**	58CV(A,X)155−22	41,000	13.0	16.0
3631082	24ABC642A**30	CNPV*6024A**	58ME(B,C)100−20	41,500	13.0	16.0
3631113	24ABC642A**30	CNPV*6024A**	58ME(B,C)120−20	41,500	13.0	16.0
3631248	24ABC642A**30	CNPV*6024A**	58MV(B,C)080−14	41,000	13.0	15.5
3631299	24ABC642A**30	CNPV*6024A**	58MV(B,C)080−20	41,000	13.0	15.5
3631363	24ABC642A**30	CNPV*6024A**	58MV(B,C)100−20	40,500	13.0	15.5
3631410	24ABC642A**30	CNPV*6024A**	58MV(B,C)120−20	41,000	13.0	16.0
3631458	24ABC642A**30	CNPV*6024A**	58MVB040−14	40,500	13.0	15.5
3631586	24ABC642A**30	CNPV*6024A**	58PH*090−16	41,500	13.0	16.0
3631638	24ABC642A**30	CNPV*6024A**	58PH*110−20	41,500	13.0	16.0
3631669	24ABC642A**30	CNPV*6024A**	58PH*135−20	41,500	13.0	16.0
3632039	24ABC642A**30	CNPV*6024A**	58UVB080−14	41,000	13.0	15.5
3632090	24ABC642A**30	CNPV*6024A**	58UVB080−20	41,000	13.0	15.5
3632154	24ABC642A**30	CNPV*6024A**	58UVB100−20	40,500	13.0	15.5
3632201	24ABC642A**30	CNPV*6024A**	58UVB120−20	41,000	13.0	16.0
3645065	24ABC642A**30	CNPV*6024A**	58VLR120−20	41,000	13.0	16.0
3645064	24ABC642A**30	CNPV*6024A**	58VMR120−20	41,000	13.0	16.0
3631875	24ABC642A**30	CNPV*6024A**+TDR		41,500	12.0	14.0
3630517	24ABC642A**30	CSPH*4212A**	58CV(A,X)070−12	40,500	12.5	15.0
3630583	24ABC642A**30	CSPH*4212A**	58CV(A,X)090−16	40,500	13.0	15.5
3630643	24ABC642A**30	CSPH*4212A**	58CV(A,X)110−20	40,500	13.0	15.5
3630697	24ABC642A**30	CSPH*4212A**	58CV(A,X)135−22	40,500	13.0	16.0
3630748	24ABC642A**30	CSPH*4212A**	58CV(A,X)155−22	40,500	13.0	16.0
3630792	24ABC642A**30	CSPH*4212A**	58HDV080−−20	41,000	12.5	15.0
3630801	24ABC642A**30	CSPH*4212A**	58HDV100−−20	41,000	13.0	15.5
3630869	24ABC642A**30	CSPH*4212A**	58ME(B,C)040−12	41,000	13.0	15.2
3630935	24ABC642A**30	CSPH*4212A**	58ME(B,C)060−12	41,000	12.5	15.0
3630997	24ABC642A**30	CSPH*4212A**	58ME(B,C)080−12	41,000	13.0	15.5
3631044	24ABC642A**30	CSPH*4212A**	58ME(B,C)080−16	40,500	13.0	15.5
3631086	24ABC642A**30	CSPH*4212A**	58ME(B,C)100−20	41,000	13.0	16.0
3631117	24ABC642A**30	CSPH*4212A**	58ME(B,C)120−20	41,000	13.0	16.0
3631199	24ABC642A**30	CSPH*4212A**	58MV(B,C)060−14	41,000	13.0	15.2
3631252	24ABC642A**30	CSPH*4212A**	58MV(B,C)080−14	40,500	12.5	15.0
3631303	24ABC642A**30	CSPH*4212A**	58MV(B,C)080−20	40,500	12.5	15.0
3631367	24ABC642A**30	CSPH*4212A**	58MV(B,C)100−20	40,500	13.0	15.2
3631414	24ABC642A**30	CSPH*4212A**	58MV(B,C)120−20	40,500	13.0	15.5
3631462	24ABC642A**30	CSPH*4212A**	58MVB040−14	40,500	12.5	15.0
3631547	24ABC642A**30	CSPH*4212A**	58PH*070−16	40,500	12.0	14.5
3631590	24ABC642A**30	CSPH*4212A**	58PH*090−16	40,500	13.0	15.5
3631642	24ABC642A**30	CSPH*4212A**	58PH*110−20	41,000	13.0	16.0
3631673	24ABC642A**30	CSPH*4212A**	58PH*135−20	40,500	13.0	15.5

See notes on page 52

COMBINATION RATINGS

AHRI Ref. No.	Model Number	Indoor Model	Furnace Model	Capacity	EER	SEER
3645075	24ABC642A**30	CSPH*4212A**	58VLR120−20	40,500	13.0	15.5
3645074	24ABC642A**30	CSPH*4212A**	58VMR120−20	40,500	13.0	15.5
4744927	24ABC642A**30	CSPH*4212A**	59*N*A060V17**14	40,000	12.5	15.2
4744928	24ABC642A**30	CSPH*4212A**	59*N*A080V17**14	40,000	12.7	15.5
4744929	24ABC642A**30	CSPH*4212A**	59*N*A100V21**20	40,500	12.7	15.5
4744930	24ABC642A**30	CSPH*4212A**	59*N*A120V24**22	40,500	13.0	16.0
4744931	24ABC642A**30	CSPH*4212A**	59*P5A060E17**14	40,500	12.5	15.2
4744932	24ABC642A**30	CSPH*4212A**	59*P5A080E17**16	40,500	12.5	15.2
4744933	24ABC642A**30	CSPH*4212A**	59*P5A100E21**16	40,500	12.7	15.5
4744934	24ABC642A**30	CSPH*4212A**	59*P5A120E24**22	41,000	12.7	15.5
4137753	24ABC642A**30	CSPH*4212A**	OVLAAB048112	40,500	12.0	14.5
4137754	24ABC642A**30	CSPH*4212A**	OVLAAB060154	41,500	12.5	15.2
4137752	24ABC642A**30	CSPH*4212A**	OVMAAB042112	40,500	12.5	15.0
3631881	24ABC642A**30	CSPH*4212A**+TDR		41,000	12.0	14.0
3630518	24ABC642A**30	CSPH*4812A**	58CV(A,X)070−12	40,500	12.5	15.0
3630584	24ABC642A**30	CSPH*4812A**	58CV(A,X)090−16	40,500	13.0	15.5
3630644	24ABC642A**30	CSPH*4812A**	58CV(A,X)110−20	41,000	13.0	15.5
3630698	24ABC642A**30	CSPH*4812A**	58CV(A,X)135−22	41,000	13.0	16.0
3630749	24ABC642A**30	CSPH*4812A**	58CV(A,X)155−22	41,000	13.0	16.0
3630793	24ABC642A**30	CSPH*4812A**	58HDV080−−20	41,000	12.5	15.0
3630802	24ABC642A**30	CSPH*4812A**	58HDV100−−20	41,000	13.0	15.5
3630870	24ABC642A**30	CSPH*4812A**	58ME(B,C)040−12	41,000	13.0	15.5
3630936	24ABC642A**30	CSPH*4812A**	58ME(B,C)060−12	41,000	13.0	15.2
3630998	24ABC642A**30	CSPH*4812A**	58ME(B,C)080−12	41,000	13.0	15.5
3631045	24ABC642A**30	CSPH*4812A**	58ME(B,C)080−16	41,000	13.0	15.5
3631087	24ABC642A**30	CSPH*4812A**	58ME(B,C)100−20	41,000	13.0	16.0
3631118	24ABC642A**30	CSPH*4812A**	58ME(B,C)120−20	41,000	13.0	16.0
3631200	24ABC642A**30	CSPH*4812A**	58MV(B,C)060−14	41,000	13.0	15.2
3631253	24ABC642A**30	CSPH*4812A**	58MV(B,C)080−14	40,500	12.5	15.0
3631304	24ABC642A**30	CSPH*4812A**	58MV(B,C)080−20	40,500	12.5	15.0
3631368	24ABC642A**30	CSPH*4812A**	58MV(B,C)100−20	40,500	13.0	15.2
3631415	24ABC642A**30	CSPH*4812A**	58MV(B,C)120−20	40,500	13.0	15.5
3631463	24ABC642A**30	CSPH*4812A**	58MVB040−14	40,500	12.5	15.0
3631548	24ABC642A**30	CSPH*4812A**	58PH*070−16	40,500	12.5	14.5
3631591	24ABC642A**30	CSPH*4812A**	58PH*090−16	41,000	13.0	16.0
3631643	24ABC642A**30	CSPH*4812A**	58PH*110−20	41,000	13.0	16.0
3631674	24ABC642A**30	CSPH*4812A**	58PH*135−20	41,000	13.0	16.0
3645077	24ABC642A**30	CSPH*4812A**	58VLR120−20	40,500	13.0	16.0
3645076	24ABC642A**30	CSPH*4812A**	58VMR120−20	40,500	13.0	15.5
4744935	24ABC642A**30	CSPH*4812A**	59*N*A060V17**14	40,000	12.5	15.2
4744936	24ABC642A**30	CSPH*4812A**	59*N*A080V17**14	40,500	12.7	15.5
4744937	24ABC642A**30	CSPH*4812A**	59*N*A100V21**20	40,500	12.7	15.5
4744938	24ABC642A**30	CSPH*4812A**	59*N*A120V24**22	40,500	13.0	16.0
4744939	24ABC642A**30	CSPH*4812A**	59*P5A060E17**14	40,500	12.5	15.2
4744940	24ABC642A**30	CSPH*4812A**	59*P5A080E17**16	41,000	12.5	15.2
4744941	24ABC642A**30	CSPH*4812A**	59*P5A100E21**16	40,500	12.7	15.5
4744942	24ABC642A**30	CSPH*4812A**	59*P5A120E24**22	41,000	12.7	15.5
4137756	24ABC642A**30	CSPH*4812A**	OVLAAB048112	41,000	12.0	15.0
4137757	24ABC642A**30	CSPH*4812A**	OVLAAB060154	41,500	12.5	15.2
4137755	24ABC642A**30	CSPH*4812A**	OVMAAB042112	40,500	12.5	15.2
3631882	24ABC642A**30	CSPH*4812A**+TDR		41,000	12.0	14.0
3630519	24ABC642A**30	CSPH*6012A**	58CV(A,X)070−12	41,000	13.0	15.5
3630585	24ABC642A**30	CSPH*6012A**	58CV(A,X)090−16	41,000	13.0	16.0
3630645	24ABC642A**30	CSPH*6012A**	58CV(A,X)110−20	41,500	13.0	16.0
3630699	24ABC642A**30	CSPH*6012A**	58CV(A,X)135−22	41,500	13.0	16.0
3630750	24ABC642A**30	CSPH*6012A**	58CV(A,X)155−22	41,500	13.0	16.0
3630871	24ABC642A**30	CSPH*6012A**	58ME(B,C)040−12	41,500	13.0	15.5
3630937	24ABC642A**30	CSPH*6012A**	58ME(B,C)060−12	41,500	13.0	15.5
3630999	24ABC642A**30	CSPH*6012A**	58ME(B,C)080−12	41,500	13.0	16.0
3631046	24ABC642A**30	CSPH*6012A**	58ME(B,C)080−16	41,500	13.0	16.0
3631088	24ABC642A**30	CSPH*6012A**	58ME(B,C)100−20	41,500	13.0	16.0
3631119	24ABC642A**30	CSPH*6012A**	58ME(B,C)120−20	41,500	13.0	16.0
3631201	24ABC642A**30	CSPH*6012A**	58MV(B,C)060−14	41,500	13.0	16.0
3631254	24ABC642A**30	CSPH*6012A**	58MV(B,C)080−14	41,000	13.0	15.5
3631305	24ABC642A**30	CSPH*6012A**	58MV(B,C)080−20	41,000	13.0	15.5
3631369	24ABC642A**30	CSPH*6012A**	58MV(B,C)100−20	41,000	13.0	15.5
3631416	24ABC642A**30	CSPH*6012A**	58MV(B,C)120−20	41,000	13.0	16.0
3631464	24ABC642A**30	CSPH*6012A**	58MVB040−14	41,000	13.0	15.5
3631549	24ABC642A**30	CSPH*6012A**	58PH*070−16	41,500	12.5	15.0
3631592	24ABC642A**30	CSPH*6012A**	58PH*090−16	41,500	13.0	16.0
3631644	24ABC642A**30	CSPH*6012A**	58PH*110−20	41,500	13.0	16.0
3631675	24ABC642A**30	CSPH*6012A**	58PH*135−20	41,500	13.0	16.0
3645079	24ABC642A**30	CSPH*6012A**	58VLR120−20	41,000	13.0	16.0

See notes on page 52

COMBINATION RATINGS

AHRI Ref. No.	Model Number	Indoor Model	Furnace Model	Capacity	EER	SEER
3645078	24ABC642A**30	CSPH*6012A**	58VMR120−20	41,000	13.0	16.0
3631883	24ABC642A**30	CSPH*6012A**+TDR		41,500	12.0	14.5
3804408	24ABC642A**30	FB4CNF042		41,000	12.5	14.5
3693284	24ABC642A**30	FB4CNF042+TXV		41,000	12.5	15.0
3804409	24ABC642A**30	FB4CNF048		41,500	12.5	14.5
3693285	24ABC642A**30	FB4CNF048+TXV		41,000	13.0	15.0
3631711	24ABC642A**30	FE4AN(B,F)003+UI		40,000	13.0	15.5
3631714	24ABC642A**30	FE4AN(B,F)005+UI		41,000	13.0	16.0
3631717	24ABC642A**30	FE4ANB006+UI		41,500	13.0	16.0
3631749	24ABC642A**30	FE5ANB004+UI		41,500	13.0	16.0
3631807	24ABC642A**30	FV4CN(B,F)003		40,000	13.0	15.5
3631810	24ABC642A**30	FV4CN(B,F)005		41,000	13.0	16.0
3631813	24ABC642A**30	FV4CNB006		41,500	13.0	16.0
3632303	24ABC642A**30	FX4DN(B,F)043		41,000	12.5	15.0
3632305	24ABC642A**30	FX4DN(B,F)049		42,000	13.0	16.0
3804410	24ABC642A**30	FY5BNF042		41,000	12.0	14.0
3693297	24ABC642A**30	FY5BNF042+TXV		40,500	12.5	14.5
3804411	24ABC642A**30	FY5BNF048		41,500	12.0	14.0
3693298	24ABC642A**30	FY5BNF048+TXV		41,500	12.5	14.5
3837754	24ABC648A**31	†CAP**6024A**+TDR		46,000	12.5	14.5
3837839	24ABC648A**31	CAP**4817A**	58CV(A,X)090−16	44,000	12.5	15.0
3837840	24ABC648A**31	CAP**4817A**	58CV(A,X)110−20	44,000	12.5	15.0
3897463	24ABC648A**31	CAP**4817A**	58ME(B,C)080−16	44,000	12.5	15.0
3897464	24ABC648A**31	CAP**4817A**	58ME(B,C)100−20	44,000	13.0	15.5
3837837	24ABC648A**31	CAP**4817A**	58MV(B,C)080−20	44,000	12.5	14.5
3837838	24ABC648A**31	CAP**4817A**	58MV(B,C)100−20	44,000	12.5	14.5
3837841	24ABC648A**31	CAP**4817A**	58PH*090−16	44,000	12.5	15.0
3837842	24ABC648A**31	CAP**4817A**	58PH*110−20	44,000	13.0	15.5
3897413	24ABC648A**31	CAP**4817A**	58UVB080−20	44,000	12.5	14.5
3897414	24ABC648A**31	CAP**4817A**	58UVB100−20	44,000	12.5	14.5
3837836	24ABC648A**31	CAP**4817A**+TDR		44,000	12.5	14.5
3837849	24ABC648A**31	CAP**4821A**	58CV(A,X)090−16	44,500	12.5	15.2
3837850	24ABC648A**31	CAP**4821A**	58CV(A,X)110−20	44,500	12.5	15.0
3837851	24ABC648A**31	CAP**4821A**	58CV(A,X)135−22	44,500	12.5	15.5
3837852	24ABC648A**31	CAP**4821A**	58CV(A,X)155−22	44,500	13.0	15.5
3897465	24ABC648A**31	CAP**4821A**	58ME(B,C)080−16	44,500	12.5	15.0
3897466	24ABC648A**31	CAP**4821A**	58ME(B,C)100−20	44,500	12.5	15.0
3897467	24ABC648A**31	CAP**4821A**	58ME(B,C)120−20	45,000	13.0	15.5
3837846	24ABC648A**31	CAP**4821A**	58MV(B,C)080−20	44,000	12.5	14.5
3837847	24ABC648A**31	CAP**4821A**	58MV(B,C)100−20	44,500	12.5	14.5
3837848	24ABC648A**31	CAP**4821A**	58MV(B,C)120−20	44,500	12.5	15.0
3837853	24ABC648A**31	CAP**4821A**	58PH*090−16	44,500	12.5	15.0
3837854	24ABC648A**31	CAP**4821A**	58PH*110−20	44,500	13.0	15.5
3837855	24ABC648A**31	CAP**4821A**	58PH*135−20	44,500	12.5	15.0
3897415	24ABC648A**31	CAP**4821A**	58UVB080−20	44,000	12.5	14.5
3897416	24ABC648A**31	CAP**4821A**	58UVB100−20	44,500	12.5	14.5
3897417	24ABC648A**31	CAP**4821A**	58UVB120−20	44,500	12.5	15.0
3916505	24ABC648A**31	CAP**4821A**	58VLR120−20	45,000	12.5	15.0
3916504	24ABC648A**31	CAP**4821A**	58VMR120−20	45,000	12.5	15.0
4744943	24ABC648A**31	CAP**4821A**	59*N*A100V21**20	42,000	12.5	15.2
4744944	24ABC648A**31	CAP**4821A**	59*P5A100E21**16	42,000	12.5	15.2
3837845	24ABC648A**31	CAP**4821A**+TDR		45,000	12.0	14.2
3837826	24ABC648A**31	CAP**4823A**	58HDV080−−20	44,500	12.5	14.5
3837827	24ABC648A**31	CAP**4823A**	58HDV100−−20	44,500	12.5	15.0
4744955	24ABC648A**31	CAP**4823A**	59*N*A100V21**20	42,000	12.5	15.2
4744956	24ABC648A**31	CAP**4823A**	59*N*A120V24**22	42,000	12.7	15.5
4744957	24ABC648A**31	CAP**4823A**	59*P5A100E21**16	42,000	12.5	15.2
4744958	24ABC648A**31	CAP**4823A**	59*P5A120E24**22	44,500	12.7	15.5
3916510	24ABC648A**31	CAP**4823A**+TDR		45,000	12.0	14.5
3837863	24ABC648A**31	CAP**4824A**	58CV(A,X)110−20	44,500	12.5	15.0
3837864	24ABC648A**31	CAP**4824A**	58CV(A,X)135−22	44,500	12.5	15.5
3837865	24ABC648A**31	CAP**4824A**	58CV(A,X)155−22	44,500	13.0	16.0
3897468	24ABC648A**31	CAP**4824A**	58ME(B,C)100−20	44,500	12.5	15.5
3897469	24ABC648A**31	CAP**4824A**	58ME(B,C)120−20	45,000	13.0	15.5
3837860	24ABC648A**31	CAP**4824A**	58MV(B,C)080−20	44,000	12.5	15.0
3837861	24ABC648A**31	CAP**4824A**	58MV(B,C)100−20	44,500	12.5	14.5
3837862	24ABC648A**31	CAP**4824A**	58MV(B,C)120−20	44,500	12.5	15.0
3837866	24ABC648A**31	CAP**4824A**	58PH*090−16	44,500	12.5	15.0
3837867	24ABC648A**31	CAP**4824A**	58PH*110−20	44,500	12.5	15.5
3837868	24ABC648A**31	CAP**4824A**	58PH*135−20	44,500	12.5	15.0
3897418	24ABC648A**31	CAP**4824A**	58UVB080−20	44,000	12.5	15.0
3897419	24ABC648A**31	CAP**4824A**	58UVB100−20	44,500	12.5	14.5

See notes on page 52

COMBINATION RATINGS

AHRI Ref. No.	Model Number	Indoor Model	Furnace Model	Capacity	EER	SEER
3897420	24ABC648A**31	CAP**4824A**	58UVB120−20	44,500	12.5	15.0
3916507	24ABC648A**31	CAP**4824A**	58VLR120−20	45,000	12.5	15.0
3916506	24ABC648A**31	CAP**4824A**	58VMR120−20	45,000	12.5	15.0
4744945	24ABC648A**31	CAP**4824A**	59*N*A100V21**20	42,000	12.5	15.2
4744946	24ABC648A**31	CAP**4824A**	59*N*A120V24**22	42,000	12.7	15.5
4744947	24ABC648A**31	CAP**4824A**	59*P5A100E21**16	42,000	12.5	15.2
4744948	24ABC648A**31	CAP**4824A**	59*P5A120E24**22	44,500	12.7	15.5
3837859	24ABC648A**31	CAP**4824A**+TDR		45,000	12.0	14.2
3837759	24ABC648A**31	CAP**6021A**	58CV(A,X)090−16	45,000	13.0	16.0
3837760	24ABC648A**31	CAP**6021A**	58CV(A,X)110−20	45,000	13.0	16.0
3837761	24ABC648A**31	CAP**6021A**	58CV(A,X)135−22	45,000	13.0	16.0
3837762	24ABC648A**31	CAP**6021A**	58CV(A,X)155−22	45,500	13.0	16.0
3897450	24ABC648A**31	CAP**6021A**	58ME(B,C)080−16	45,500	12.5	15.5
3897451	24ABC648A**31	CAP**6021A**	58ME(B,C)100−20	45,500	13.0	16.0
3897452	24ABC648A**31	CAP**6021A**	58ME(B,C)120−20	45,500	13.0	16.0
3837756	24ABC648A**31	CAP**6021A**	58MV(B,C)080−20	45,000	13.0	15.5
3837757	24ABC648A**31	CAP**6021A**	58MV(B,C)100−20	45,000	13.0	15.5
3837758	24ABC648A**31	CAP**6021A**	58MV(B,C)120−20	45,000	13.0	16.0
3837763	24ABC648A**31	CAP**6021A**	58PH*090−16	45,500	13.0	16.0
3837764	24ABC648A**31	CAP**6021A**	58PH*110−20	45,500	13.0	16.0
3837765	24ABC648A**31	CAP**6021A**	58PH*135−20	45,500	13.0	16.0
3897404	24ABC648A**31	CAP**6021A**	58UVB080−20	45,000	13.0	15.5
3897405	24ABC648A**31	CAP**6021A**	58UVB100−20	45,000	13.0	15.5
3897406	24ABC648A**31	CAP**6021A**	58UVB120−20	45,000	13.0	16.0
3837830	24ABC648A**31	CAP**6021A**	58VLR120−20	45,000	13.0	16.0
3916508	24ABC648A**31	CAP**6021A**	58VMR120−20	45,500	12.5	15.5
4744949	24ABC648A**31	CAP**6021A**	59*N*A100V21**20	44,500	12.7	15.5
4744950	24ABC648A**31	CAP**6021A**	59*P5A100E21**16	45,000	12.7	15.5
3837755	24ABC648A**31	CAP**6021A**+TDR		45,500	12.5	14.5
3837772	24ABC648A**31	CAP**6024A**	58CV(A,X)110−20	45,500	13.0	16.0
3837773	24ABC648A**31	CAP**6024A**	58CV(A,X)135−22	45,500	13.0	16.0
3837774	24ABC648A**31	CAP**6024A**	58CV(A,X)155−22	45,500	13.0	16.0
3897453	24ABC648A**31	CAP**6024A**	58ME(B,C)100−20	45,500	13.0	16.0
3897454	24ABC648A**31	CAP**6024A**	58ME(B,C)120−20	45,500	13.0	16.0
3837769	24ABC648A**31	CAP**6024A**	58MV(B,C)080−20	45,000	12.5	15.5
3837770	24ABC648A**31	CAP**6024A**	58MV(B,C)100−20	45,500	12.5	15.3
3837771	24ABC648A**31	CAP**6024A**	58MV(B,C)120−20	45,500	12.5	15.5
3837775	24ABC648A**31	CAP**6024A**	58PH*090−16	45,500	13.0	16.0
3837776	24ABC648A**31	CAP**6024A**	58PH*110−20	45,500	13.0	16.0
3837777	24ABC648A**31	CAP**6024A**	58PH*135−20	45,500	13.0	16.0
3897407	24ABC648A**31	CAP**6024A**	58UVB080−20	45,000	12.5	15.5
3897408	24ABC648A**31	CAP**6024A**	58UVB100−20	45,500	12.5	15.3
3897409	24ABC648A**31	CAP**6024A**	58UVB120−20	45,500	12.5	15.5
3837831	24ABC648A**31	CAP**6024A**	58VLR120−20	45,000	13.0	16.0
3916509	24ABC648A**31	CAP**6024A**	58VMR120−20	45,500	12.5	15.5
4744951	24ABC648A**31	CAP**6024A**	59*N*A100V21**20	44,500	12.7	15.5
4744952	24ABC648A**31	CAP**6024A**	59*N*A120V24**22	45,000	13.0	16.0
4744953	24ABC648A**31	CAP**6024A**	59*P5A100E21**16	45,000	12.7	15.5
4744954	24ABC648A**31	CAP**6024A**	59*P5A120E24**22	45,500	13.0	16.0
3837828	24ABC648A**31	CAP**6025A**	58HDV080−−20	45,500	12.5	15.3
3837829	24ABC648A**31	CAP**6025A**	58HDV100−−20	45,500	13.0	15.5
4744959	24ABC648A**31	CAP**6025A**	59*N*A100V21**20	44,500	12.7	15.5
4744960	24ABC648A**31	CAP**6025A**	59*N*A120V24**22	45,000	13.0	16.0
4744961	24ABC648A**31	CAP**6025A**	59*P5A100E21**16	45,000	12.7	15.5
4744962	24ABC648A**31	CAP**6025A**	59*P5A120E24**22	45,500	13.0	16.0
3916511	24ABC648A**31	CAP**6025A**+TDR		46,000	12.0	14.5
3837901	24ABC648A**31	CNPH*4821A**	58CV(A,X)090−16	44,500	12.5	15.0
3837902	24ABC648A**31	CNPH*4821A**	58CV(A,X)110−20	44,500	12.5	15.0
3837903	24ABC648A**31	CNPH*4821A**	58CV(A,X)135−22	44,500	13.0	15.5
3837904	24ABC648A**31	CNPH*4821A**	58CV(A,X)155−22	45,000	13.0	16.0
4137758	24ABC648A**31	CNPH*4821A**	58HDV080−−20	45,000	12.5	15.0
4137759	24ABC648A**31	CNPH*4821A**	58HDV100−−20	45,000	12.5	15.2
3897475	24ABC648A**31	CNPH*4821A**	58ME(B,C)080−16	45,000	12.5	15.0
3897476	24ABC648A**31	CNPH*4821A**	58ME(B,C)100−20	45,000	12.5	15.5
3897477	24ABC648A**31	CNPH*4821A**	58ME(B,C)120−20	45,000	13.0	16.0
3837898	24ABC648A**31	CNPH*4821A**	58MV(B,C)080−20	44,500	12.5	15.0
3837899	24ABC648A**31	CNPH*4821A**	58MV(B,C)100−20	44,500	12.5	15.0
3837900	24ABC648A**31	CNPH*4821A**	58MV(B,C)120−20	44,500	12.5	15.0
3837905	24ABC648A**31	CNPH*4821A**	58PH*090−16	45,000	12.5	15.0
3837906	24ABC648A**31	CNPH*4821A**	58PH*110−20	45,000	13.0	16.0
3837907	24ABC648A**31	CNPH*4821A**	58PH*135−20	45,000	12.5	15.5
3916531	24ABC648A**31	CNPH*4821A**	58VLR120−20	45,500	12.5	15.0
3916530	24ABC648A**31	CNPH*4821A**	58VMR120−20	45,500	12.5	15.0

See notes on page 52

COMBINATION RATINGS

AHRI Ref. No.	Model Number	Indoor Model	Furnace Model	Capacity	EER	SEER
4744978	24ABC648A**31	CNPH*4821A**	59*N*A100V21**20	42,000	12.7	15.5
4744979	24ABC648A**31	CNPH*4821A**	59*N*A120V24**22	42,000	12.7	15.5
4744980	24ABC648A**31	CNPH*4821A**	59*P5A080E17**16	42,000	12.5	15.0
4744981	24ABC648A**31	CNPH*4821A**	59*P5A100E21**16	44,500	12.5	15.2
4744982	24ABC648A**31	CNPH*4821A**	59*P5A120E24**22	44,500	12.7	15.5
4137778	24ABC648A**31	CNPH*4821A**	OVLAAB048112	44,500	12.0	14.5
4137779	24ABC648A**31	CNPH*4821A**	OVLAAB060154	45,000	12.5	15.2
3837897	24ABC648A**31	CNPH*4821A**+TDR		45,000	12.0	14.2
3837796	24ABC648A**31	CNPH*6024A**	58CV(A,X)090−16	45,000	12.5	15.5
3837797	24ABC648A**31	CNPH*6024A**	58CV(A,X)110−20	45,500	13.0	16.0
3837798	24ABC648A**31	CNPH*6024A**	58CV(A,X)135−22	45,500	13.0	16.0
3837799	24ABC648A**31	CNPH*6024A**	58CV(A,X)155−22	45,500	13.0	16.0
4137760	24ABC648A**31	CNPH*6024A**	58HDV080−−20	45,500	12.5	15.2
4137761	24ABC648A**31	CNPH*6024A**	58HDV100−−20	45,500	12.5	15.2
3897457	24ABC648A**31	CNPH*6024A**	58ME(B,C)080−16	45,500	12.5	15.0
3897458	24ABC648A**31	CNPH*6024A**	58ME(B,C)100−20	45,500	13.0	16.0
3897459	24ABC648A**31	CNPH*6024A**	58ME(B,C)120−20	46,000	13.0	16.0
3837793	24ABC648A**31	CNPH*6024A**	58MV(B,C)080−20	45,000	12.5	15.5
3837794	24ABC648A**31	CNPH*6024A**	58MV(B,C)100−20	45,500	12.5	15.5
3837795	24ABC648A**31	CNPH*6024A**	58MV(B,C)120−20	45,500	12.5	15.5
3837800	24ABC648A**31	CNPH*6024A**	58PH*090−16	45,500	13.0	16.0
3837801	24ABC648A**31	CNPH*6024A**	58PH*110−20	45,500	13.0	16.0
3837802	24ABC648A**31	CNPH*6024A**	58PH*135−20	45,500	13.0	16.0
3837833	24ABC648A**31	CNPH*6024A**	58VLR120−20	45,000	13.0	16.0
3916532	24ABC648A**31	CNPH*6024A**	58VMR120−20	46,000	12.5	15.5
4744983	24ABC648A**31	CNPH*6024A**	59*N*A100V21**20	44,500	12.7	15.5
4744984	24ABC648A**31	CNPH*6024A**	59*N*A120V24**22	44,500	13.0	16.0
4744985	24ABC648A**31	CNPH*6024A**	59*P5A080E17**16	45,000	12.5	15.2
4744986	24ABC648A**31	CNPH*6024A**	59*P5A100E21**16	45,000	12.7	15.5
4744987	24ABC648A**31	CNPH*6024A**	59*P5A120E24**22	45,500	13.0	16.0
4137780	24ABC648A**31	CNPH*6024A**	OVLAAB048112	45,000	12.5	15.0
4137781	24ABC648A**31	CNPH*6024A**	OVLAAB060154	46,000	12.5	15.2
3837792	24ABC648A**31	CNPH*6024A**+TDR		46,000	12.5	14.5
3916537	24ABC648A**31	CNPH*6124A**	58CV(A,X)090−16	46,500	12.5	15.5
3916538	24ABC648A**31	CNPH*6124A**	58CV(A,X)110−20	46,500	12.5	15.5
3916539	24ABC648A**31	CNPH*6124A**	58CV(A,X)135−22	46,500	13.0	16.0
3916540	24ABC648A**31	CNPH*6124A**	58CV(A,X)155−22	46,500	13.0	16.0
4137762	24ABC648A**31	CNPH*6124A**	58HDV080−−20	45,500	12.5	15.2
4137763	24ABC648A**31	CNPH*6124A**	58HDV100−−20	45,500	12.5	15.5
3916544	24ABC648A**31	CNPH*6124A**	58ME(B,C)080−16	46,500	12.5	15.5
3916545	24ABC648A**31	CNPH*6124A**	58ME(B,C)100−20	46,500	13.0	16.0
3916546	24ABC648A**31	CNPH*6124A**	58ME(B,C)120−20	46,500	13.0	16.0
3916534	24ABC648A**31	CNPH*6124A**	58MV(B,C)080−20	46,500	12.5	15.5
3916535	24ABC648A**31	CNPH*6124A**	58MV(B,C)100−20	46,500	12.5	15.5
3916536	24ABC648A**31	CNPH*6124A**	58MV(B,C)120−20	46,500	12.5	15.5
3916541	24ABC648A**31	CNPH*6124A**	58PH*090−16	46,500	12.5	15.5
3916542	24ABC648A**31	CNPH*6124A**	58PH*110−20	46,500	13.0	16.0
3916543	24ABC648A**31	CNPH*6124A**	58PH*135−20	46,500	13.0	16.0
3916548	24ABC648A**31	CNPH*6124A**	58VLR120−20	46,500	12.5	15.5
3916547	24ABC648A**31	CNPH*6124A**	58VMR120−20	46,500	12.5	15.5
4744988	24ABC648A**31	CNPH*6124A**	59*N*A100V21**20	45,000	12.7	15.5
4744989	24ABC648A**31	CNPH*6124A**	59*N*A120V24**22	45,000	13.0	16.0
4744990	24ABC648A**31	CNPH*6124A**	59*P5A100E21**16	45,000	12.7	15.5
4744991	24ABC648A**31	CNPH*6124A**	59*P5A120E24**22	45,500	13.0	16.0
4137782	24ABC648A**31	CNPH*6124A**	OVLAAB048112	45,000	12.0	15.0
4137783	24ABC648A**31	CNPH*6124A**	OVLAAB060154	46,000	12.5	15.2
3916533	24ABC648A**31	CNPH*6124A**+TDR		46,500	12.5	14.5
3837875	24ABC648A**31	CNPV*4821A**	58CV(A,X)090−16	44,500	12.5	15.0
3837876	24ABC648A**31	CNPV*4821A**	58CV(A,X)110−20	44,500	12.5	15.0
3837877	24ABC648A**31	CNPV*4821A**	58CV(A,X)135−22	44,500	12.5	15.5
3837878	24ABC648A**31	CNPV*4821A**	58CV(A,X)155−22	45,000	13.0	16.0
4137770	24ABC648A**31	CNPV*4821A**	58HDV080−−20	44,500	12.3	15.2
3897470	24ABC648A**31	CNPV*4821A**	58ME(B,C)080−16	45,000	12.5	15.0
3897471	24ABC648A**31	CNPV*4821A**	58ME(B,C)100−20	45,000	12.5	15.5
3897472	24ABC648A**31	CNPV*4821A**	58ME(B,C)120−20	45,000	13.0	16.0
3837872	24ABC648A**31	CNPV*4821A**	58MV(B,C)080−20	44,500	12.5	15.0
3837873	24ABC648A**31	CNPV*4821A**	58MV(B,C)100−20	44,500	12.5	15.0
3837874	24ABC648A**31	CNPV*4821A**	58MV(B,C)120−20	44,500	12.5	15.0
3837879	24ABC648A**31	CNPV*4821A**	58PH*090−16	45,000	12.5	15.0
3837880	24ABC648A**31	CNPV*4821A**	58PH*110−20	45,000	13.0	16.0
3837881	24ABC648A**31	CNPV*4821A**	58PH*135−20	45,000	12.5	15.5
3897421	24ABC648A**31	CNPV*4821A**	58UVB080−20	44,500	12.5	15.0
3897422	24ABC648A**31	CNPV*4821A**	58UVB100−20	44,500	12.5	15.0

See notes on page 52

COMBINATION RATINGS

AHRI Ref. No.	Model Number	Indoor Model	Furnace Model	Capacity	EER	SEER
3897423	24ABC648A**31	CNPV*4821A**	58UVB120−20	44,500	12.5	15.0
3916513	24ABC648A**31	CNPV*4821A**	58VLR120−20	45,000	12.5	15.0
3916512	24ABC648A**31	CNPV*4821A**	58VMR120−20	45,000	12.5	15.0
4744963	24ABC648A**31	CNPV*4821A**	59*N*A100V21**20	42,000	12.7	15.5
4744964	24ABC648A**31	CNPV*4821A**	59*P5A080E17**16	42,000	12.5	15.0
4744965	24ABC648A**31	CNPV*4821A**	59*P5A100E21**16	44,500	12.5	15.2
4137771	24ABC648A**31	CNPV*4821A**	OVLAAB048112	44,500	12.0	14.5
3837871	24ABC648A**31	CNPV*4821A**+TDR		45,000	12.0	14.2
3837889	24ABC648A**31	CNPV*4824A**	58CV(A,X)110−20	44,500	12.5	15.0
3837890	24ABC648A**31	CNPV*4824A**	58CV(A,X)135−22	44,500	13.0	15.5
3837891	24ABC648A**31	CNPV*4824A**	58CV(A,X)155−22	45,000	13.0	16.0
4137764	24ABC648A**31	CNPV*4824A**	58HDV080−−20	44,500	12.5	15.0
4137765	24ABC648A**31	CNPV*4824A**	58HDV100−−20	44,500	12.5	15.2
3897473	24ABC648A**31	CNPV*4824A**	58ME(B,C)100−20	45,000	12.5	15.5
3897474	24ABC648A**31	CNPV*4824A**	58ME(B,C)120−20	45,000	13.0	16.0
3837886	24ABC648A**31	CNPV*4824A**	58MV(B,C)080−20	44,500	12.5	15.0
3837887	24ABC648A**31	CNPV*4824A**	58MV(B,C)100−20	44,500	12.5	15.0
3837888	24ABC648A**31	CNPV*4824A**	58MV(B,C)120−20	44,500	12.5	15.0
3837892	24ABC648A**31	CNPV*4824A**	58PH*090−16	45,000	12.5	15.0
3837893	24ABC648A**31	CNPV*4824A**	58PH*110−20	45,000	13.0	16.0
3837894	24ABC648A**31	CNPV*4824A**	58PH*135−20	45,000	12.5	15.5
3897424	24ABC648A**31	CNPV*4824A**	58UVB080−20	44,500	12.5	15.0
3897425	24ABC648A**31	CNPV*4824A**	58UVB100−20	44,500	12.5	15.0
3897426	24ABC648A**31	CNPV*4824A**	58UVB120−20	44,500	12.5	15.0
3916515	24ABC648A**31	CNPV*4824A**	58VLR120−20	45,000	12.5	15.0
3916514	24ABC648A**31	CNPV*4824A**	58VMR120−20	45,000	12.5	15.0
4744966	24ABC648A**31	CNPV*4824A**	59*N*A100V21**20	42,000	12.7	15.5
4744967	24ABC648A**31	CNPV*4824A**	59*N*A120V24**22	42,000	12.7	15.5
4744968	24ABC648A**31	CNPV*4824A**	59*P5A100E21**16	44,500	12.5	15.2
4744969	24ABC648A**31	CNPV*4824A**	59*P5A120E24**22	44,500	12.7	15.5
4137772	24ABC648A**31	CNPV*4824A**	OVLAAB048112	44,500	12.0	14.5
4137773	24ABC648A**31	CNPV*4824A**	OVLAAB060154	45,000	12.0	15.2
3837885	24ABC648A**31	CNPV*4824A**+TDR		45,000	12.0	14.2
3837784	24ABC648A**31	CNPV*6024A**	58CV(A,X)110−20	45,500	13.0	16.0
3837785	24ABC648A**31	CNPV*6024A**	58CV(A,X)135−22	45,500	13.0	16.0
3837786	24ABC648A**31	CNPV*6024A**	58CV(A,X)155−22	45,500	13.0	16.0
4137766	24ABC648A**31	CNPV*6024A**	58HDV080−−20	45,500	12.5	15.2
4137767	24ABC648A**31	CNPV*6024A**	58HDV100−−20	45,500	12.5	15.2
3897455	24ABC648A**31	CNPV*6024A**	58ME(B,C)100−20	45,500	13.0	16.0
3897456	24ABC648A**31	CNPV*6024A**	58ME(B,C)120−20	46,000	13.0	16.0
3837781	24ABC648A**31	CNPV*6024A**	58MV(B,C)080−20	45,000	12.5	15.5
3837782	24ABC648A**31	CNPV*6024A**	58MV(B,C)100−20	45,000	12.5	15.0
3837783	24ABC648A**31	CNPV*6024A**	58MV(B,C)120−20	45,500	12.5	15.5
3837787	24ABC648A**31	CNPV*6024A**	58PH*090−16	45,500	13.0	16.0
3837788	24ABC648A**31	CNPV*6024A**	58PH*110−20	45,500	13.0	16.0
3837789	24ABC648A**31	CNPV*6024A**	58PH*135−20	45,500	13.0	16.0
3897410	24ABC648A**31	CNPV*6024A**	58UVB080−20	45,000	12.5	15.5
3897411	24ABC648A**31	CNPV*6024A**	58UVB100−20	45,000	12.5	15.0
3897412	24ABC648A**31	CNPV*6024A**	58UVB120−20	45,500	12.5	15.5
3837832	24ABC648A**31	CNPV*6024A**	58VLR120−20	45,000	13.0	16.0
4744970	24ABC648A**31	CNPV*6024A**	59*N*A100V21**20	44,500	12.7	15.5
4744971	24ABC648A**31	CNPV*6024A**	59*N*A120V24**22	44,500	13.0	16.0
4744972	24ABC648A**31	CNPV*6024A**	59*P5A100E21**16	45,000	12.7	15.5
4744973	24ABC648A**31	CNPV*6024A**	59*P5A120E24**22	45,500	13.0	16.0
4137774	24ABC648A**31	CNPV*6024A**	OVLAAB048112	45,000	12.0	15.2
4137775	24ABC648A**31	CNPV*6024A**	OVLAAB060154	46,000	12.5	15.2
3837780	24ABC648A**31	CNPV*6024A**+TDR		46,000	12.5	14.5
3916520	24ABC648A**31	CNPV*6124A**	58CV(A,X)110−20	46,500	13.0	16.0
3916521	24ABC648A**31	CNPV*6124A**	58CV(A,X)135−22	46,500	13.0	16.0
3916522	24ABC648A**31	CNPV*6124A**	58CV(A,X)155−22	46,500	13.0	16.0
4137768	24ABC648A**31	CNPV*6124A**	58HDV080−−20	46,000	13.0	16.0
4137769	24ABC648A**31	CNPV*6124A**	58HDV100−−20	46,000	13.0	16.0
3916526	24ABC648A**31	CNPV*6124A**	58ME(B,C)100−20	46,500	13.0	16.0
3916527	24ABC648A**31	CNPV*6124A**	58ME(B,C)120−20	46,500	13.0	16.0
3916517	24ABC648A**31	CNPV*6124A**	58MV(B,C)080−20	46,500	12.5	15.5
3916518	24ABC648A**31	CNPV*6124A**	58MV(B,C)100−20	46,500	12.5	15.5
3916519	24ABC648A**31	CNPV*6124A**	58MV(B,C)120−20	46,500	13.0	16.0
3916523	24ABC648A**31	CNPV*6124A**	58PH*090−16	46,500	13.0	16.0
3916524	24ABC648A**31	CNPV*6124A**	58PH*110−20	46,500	13.0	16.0
3916525	24ABC648A**31	CNPV*6124A**	58PH*135−20	46,500	13.0	16.0
3916561	24ABC648A**31	CNPV*6124A**	58UVB080−20	46,500	12.5	15.5
3916562	24ABC648A**31	CNPV*6124A**	58UVB100−20	46,500	12.5	15.5
3916563	24ABC648A**31	CNPV*6124A**	58UVB120−20	46,500	13.0	16.0

See notes on page 52

COMBINATION RATINGS

AHRI Ref. No.	Model Number	Indoor Model	Furnace Model	Capacity	EER	SEER
3916529	24ABC648A**31	CNPV*6124A**	58VLR120−20	46,500	13.0	16.0
3916528	24ABC648A**31	CNPV*6124A**	58VMR120−20	46,500	13.0	16.0
4744974	24ABC648A**31	CNPV*6124A**	59*N*A100V21**20	45,500	13.0	16.0
4744975	24ABC648A**31	CNPV*6124A**	59*N*A120V24**22	45,500	13.2	16.5
4744976	24ABC648A**31	CNPV*6124A**	59*P5A100E21**16	45,500	13.0	16.0
4744977	24ABC648A**31	CNPV*6124A**	59*P5A120E24**22	46,000	13.2	16.5
4137776	24ABC648A**31	CNPV*6124A**	OVLAAB048112	45,500	12.5	15.2
4137777	24ABC648A**31	CNPV*6124A**	OVLAAB060154	46,500	13.0	16.0
3916516	24ABC648A**31	CNPV*6124A**+TDR		46,500	12.5	14.5
3837916	24ABC648A**31	CSPH*4812A**	58CV(A,X)090−16	45,000	12.5	15.0
3837917	24ABC648A**31	CSPH*4812A**	58CV(A,X)110−20	45,000	12.5	15.0
3837918	24ABC648A**31	CSPH*4812A**	58CV(A,X)135−22	45,000	12.5	15.5
3837919	24ABC648A**31	CSPH*4812A**	58CV(A,X)155−22	45,000	13.0	16.0
3916549	24ABC648A**31	CSPH*4812A**	58HDV080−−20	46,000	12.5	15.0
3916550	24ABC648A**31	CSPH*4812A**	58HDV100−−20	46,000	12.5	15.0
3897478	24ABC648A**31	CSPH*4812A**	58ME(B,C)080−16	45,000	12.5	15.0
3897479	24ABC648A**31	CSPH*4812A**	58ME(B,C)100−20	45,000	13.0	15.5
3897480	24ABC648A**31	CSPH*4812A**	58ME(B,C)120−20	45,000	13.0	16.0
3837913	24ABC648A**31	CSPH*4812A**	58MV(B,C)080−20	44,500	12.5	15.0
3837914	24ABC648A**31	CSPH*4812A**	58MV(B,C)100−20	45,000	12.5	15.0
3837915	24ABC648A**31	CSPH*4812A**	58MV(B,C)120−20	45,000	12.5	15.0
3837920	24ABC648A**31	CSPH*4812A**	58PH*090−16	45,000	12.5	15.0
3837921	24ABC648A**31	CSPH*4812A**	58PH*110−20	45,000	13.0	16.0
3837922	24ABC648A**31	CSPH*4812A**	58PH*135−20	45,000	12.5	15.5
3916552	24ABC648A**31	CSPH*4812A**	58VLR120−20	46,000	12.5	15.5
3916551	24ABC648A**31	CSPH*4812A**	58VMR120−20	46,000	12.5	15.0
4744992	24ABC648A**31	CSPH*4812A**	59*N*A100V21**20	44,500	12.7	15.5
4744993	24ABC648A**31	CSPH*4812A**	59*N*A120V24**22	44,500	12.7	15.5
4744994	24ABC648A**31	CSPH*4812A**	59*P5A100E21**16	44,500	12.5	15.2
4744995	24ABC648A**31	CSPH*4812A**	59*P5A120E24**22	45,000	12.7	15.5
4137784	24ABC648A**31	CSPH*4812A**	OVLAAB048112	44,500	12.0	14.5
4137785	24ABC648A**31	CSPH*4812A**	OVLAAB060154	45,500	12.5	15.2
3837912	24ABC648A**31	CSPH*4812A**+TDR		45,000	12.5	14.5
3837810	24ABC648A**31	CSPH*6012A**	58CV(A,X)090−16	45,500	13.0	16.0
3837811	24ABC648A**31	CSPH*6012A**	58CV(A,X)110−20	45,500	13.0	16.0
3837812	24ABC648A**31	CSPH*6012A**	58CV(A,X)135−22	45,500	13.0	16.0
3837813	24ABC648A**31	CSPH*6012A**	58CV(A,X)155−22	46,000	13.0	16.0
3916553	24ABC648A**31	CSPH*6012A**	58HDV080−−20	46,500	12.5	15.5
3916554	24ABC648A**31	CSPH*6012A**	58HDV100−−20	46,500	12.5	15.5
3897460	24ABC648A**31	CSPH*6012A**	58ME(B,C)080−16	46,000	12.5	15.5
3897461	24ABC648A**31	CSPH*6012A**	58ME(B,C)100−20	46,000	13.0	16.0
3897462	24ABC648A**31	CSPH*6012A**	58ME(B,C)120−20	46,000	13.0	16.0
3837807	24ABC648A**31	CSPH*6012A**	58MV(B,C)080−20	45,000	12.5	15.5
3837808	24ABC648A**31	CSPH*6012A**	58MV(B,C)100−20	45,500	12.5	15.5
3837809	24ABC648A**31	CSPH*6012A**	58MV(B,C)120−20	45,500	13.0	16.0
3837814	24ABC648A**31	CSPH*6012A**	58PH*090−16	46,000	13.0	16.0
3837815	24ABC648A**31	CSPH*6012A**	58PH*110−20	46,000	13.0	16.0
3837816	24ABC648A**31	CSPH*6012A**	58PH*135−20	46,000	13.0	16.0
3837835	24ABC648A**31	CSPH*6012A**	58VLR120−20	45,000	13.0	16.0
3837834	24ABC648A**31	CSPH*6012A**	58VMR120−20	45,000	13.0	16.0
4744996	24ABC648A**31	CSPH*6012A**	59*N*A100V21**20	45,000	13.0	16.0
4744997	24ABC648A**31	CSPH*6012A**	59*N*A120V24**22	45,000	13.0	16.0
4744998	24ABC648A**31	CSPH*6012A**	59*P5A080E17**16	45,000	12.7	15.5
4744999	24ABC648A**31	CSPH*6012A**	59*P5A100E21**16	45,500	12.7	15.5
4745000	24ABC648A**31	CSPH*6012A**	59*P5A120E24**22	45,500	13.0	16.0
4137786	24ABC648A**31	CSPH*6012A**	OVLAAB048112	45,500	12.5	15.2
4137787	24ABC648A**31	CSPH*6012A**	OVLAAB060154	46,000	13.0	16.0
3837806	24ABC648A**31	CSPH*6012A**+TDR		46,000	12.5	14.5
3916555	24ABC648A**31	FB4CNF048+TXV		45,500	12.5	15.0
3916556	24ABC648A**31	FB4CNF060		46,500	12.5	15.5
3837821	24ABC648A**31	FE4AN(B,F)005+UI		45,500	13.0	16.0
3837822	24ABC648A**31	FE4ANB006+UI		46,000	13.0	16.0
3919868	24ABC648A**31	FV4CN(B,F)005		45,500	13.0	16.0
3919869	24ABC648A**31	FV4CNB006		46,000	13.0	16.0
3916559	24ABC648A**31	FX4DN(B,F)049		46,500	13.0	16.0
3916560	24ABC648A**31	FX4DN(B,F)061		47,000	13.0	16.0
3916558	24ABC648A**31	FY5BNB060		46,500	12.0	14.5
3916557	24ABC648A**31	FY5BNF048+TXV		46,000	12.5	15.0
3837928	24ABC649A**30	†CAP**6024A**+TDR		48,000	11.7	14.0
3837930	24ABC649A**30	CAP**4817A**	58CV(A,X)090−16	46,500	12.0	14.0
3838026	24ABC649A**30	CAP**4817A**	58ME(B,C)080−16	47,000	12.0	14.5
3837999	24ABC649A**30	CAP**4817A**	58PH*070−16	46,000	11.2	13.5

See notes on page 52

COMBINATION RATINGS

AHRI Ref. No.	Model Number	Indoor Model	Furnace Model	Capacity	EER	SEER
3837929	24ABC649A**30	CAP**4817A**+TDR		46,500	11.7	13.5
3837934	24ABC649A**30	CAP**4821A**	58CV(A,X)110−20	46,500	12.0	14.5
3838027	24ABC649A**30	CAP**4821A**	58ME(B,C)100−20	47,000	12.0	14.5
3837932	24ABC649A**30	CAP**4821A**	58MV(B,C)080−20	46,500	11.7	14.0
3837933	24ABC649A**30	CAP**4821A**	58MV(B,C)100−20	46,500	12.0	14.0
3838000	24ABC649A**30	CAP**4821A**	58PH*090−16	47,000	12.0	14.5
3838001	24ABC649A**30	CAP**4821A**	58PH*110−20	47,000	12.2	14.5
4141778	24ABC649A**30	CAP**4821A**	58UVB080−20	46,500	11.7	14.0
4141779	24ABC649A**30	CAP**4821A**	58UVB100−20	46,500	12.0	14.0
4137789	24ABC649A**30	CAP**4821A**	58VLR120−20	46,500	12.0	14.0
4137788	24ABC649A**30	CAP**4821A**	58VMR120−20	46,500	12.0	14.0
4745029	24ABC649A**30	CAP**4821A**	59*N*A100V21**20	46,000	11.8	14.2
4745030	24ABC649A**30	CAP**4821A**	59*P5A100E21**16	46,500	11.8	14.2
3837931	24ABC649A**30	CAP**4821A**+TDR		47,500	11.5	13.5
4137806	24ABC649A**30	CAP**4823A**	58HDV080−−20	47,000	11.5	14.0
4745041	24ABC649A**30	CAP**4823A**	59*N*A100V21**20	46,000	11.8	14.2
4745042	24ABC649A**30	CAP**4823A**	59*N*A120V24**22	46,000	12.0	14.5
4745043	24ABC649A**30	CAP**4823A**	59*P5A100E21**16	46,500	11.8	14.2
4745044	24ABC649A**30	CAP**4823A**	59*P5A120E24**22	46,500	12.0	14.5
3838049	24ABC649A**30	CAP**4823A**+TDR		47,500	11.5	13.5
3837937	24ABC649A**30	CAP**4824A**	58CV(A,X)135−22	47,000	12.2	14.5
3837938	24ABC649A**30	CAP**4824A**	58CV(A,X)155−22	47,000	12.2	14.5
4137804	24ABC649A**30	CAP**4824A**	58HDV100−−20	46,500	12.0	14.0
3838028	24ABC649A**30	CAP**4824A**	58ME(B,C)120−20	47,000	12.0	14.5
3837936	24ABC649A**30	CAP**4824A**	58MV(B,C)120−20	46,500	12.0	14.0
3838002	24ABC649A**30	CAP**4824A**	58PH*135−20	47,000	12.2	14.5
4141780	24ABC649A**30	CAP**4824A**	58UVB120−20	46,500	12.0	14.0
4745031	24ABC649A**30	CAP**4824A**	59*N*A100V21**20	46,000	11.8	14.2
4745032	24ABC649A**30	CAP**4824A**	59*N*A120V24**22	46,000	12.0	14.5
4745033	24ABC649A**30	CAP**4824A**	59*P5A100E21**16	46,500	11.8	14.2
4745034	24ABC649A**30	CAP**4824A**	59*P5A120E24**22	46,500	12.0	14.5
3837935	24ABC649A**30	CAP**4824A**+TDR		47,500	11.5	13.5
3837942	24ABC649A**30	CAP**6021A**	58CV(A,X)110−20	47,500	12.5	15.2
3838029	24ABC649A**30	CAP**6021A**	58ME(B,C)100−20	48,000	12.5	15.2
3837940	24ABC649A**30	CAP**6021A**	58MV(B,C)080−20	47,500	12.2	14.5
3837941	24ABC649A**30	CAP**6021A**	58MV(B,C)100−20	47,500	12.2	14.5
3838003	24ABC649A**30	CAP**6021A**	58PH*090−16	47,500	12.2	14.5
3838004	24ABC649A**30	CAP**6021A**	58PH*110−20	47,500	12.5	15.2
4141781	24ABC649A**30	CAP**6021A**	58UVB080−20	47,500	12.2	14.5
4141782	24ABC649A**30	CAP**6021A**	58UVB100−20	47,500	12.2	14.5
4137791	24ABC649A**30	CAP**6021A**	58VLR120−20	47,500	12.0	14.5
4137790	24ABC649A**30	CAP**6021A**	58VMR120−20	47,500	12.0	14.5
4745035	24ABC649A**30	CAP**6021A**	59*N*A100V21**20	47,000	12.0	14.5
4745036	24ABC649A**30	CAP**6021A**	59*P5A100E21**16	47,500	12.0	14.5
3837939	24ABC649A**30	CAP**6021A**+TDR		48,000	11.7	14.0
3837944	24ABC649A**30	CAP**6024A**	58CV(A,X)135−22	48,000	12.5	15.2
3837945	24ABC649A**30	CAP**6024A**	58CV(A,X)155−22	48,000	12.5	15.2
4137805	24ABC649A**30	CAP**6024A**	58HDV100−−20	48,000	12.0	14.5
3838030	24ABC649A**30	CAP**6024A**	58ME(B,C)120−20	48,000	12.5	15.2
3837943	24ABC649A**30	CAP**6024A**	58MV(B,C)120−20	47,500	12.2	14.5
3838005	24ABC649A**30	CAP**6024A**	58PH*135−20	48,000	12.2	15.0
4141783	24ABC649A**30	CAP**6024A**	58UVB120−20	47,500	12.2	14.5
4745037	24ABC649A**30	CAP**6024A**	59*N*A100V21**20	47,000	12.0	14.5
4745038	24ABC649A**30	CAP**6024A**	59*N*A120V24**22	47,000	12.5	15.0
4745039	24ABC649A**30	CAP**6024A**	59*P5A100E21**16	47,500	12.0	14.5
4745040	24ABC649A**30	CAP**6024A**	59*P5A120E24**22	48,000	12.4	15.0
4137807	24ABC649A**30	CAP**6025A**	58HDV100−−20	48,000	12.0	14.5
4745045	24ABC649A**30	CAP**6025A**	59*N*A100V21**20	47,000	12.0	14.5
4745046	24ABC649A**30	CAP**6025A**	59*N*A120V24**22	47,000	12.5	15.0
4745047	24ABC649A**30	CAP**6025A**	59*P5A100E21**16	47,500	12.0	14.5
4745048	24ABC649A**30	CAP**6025A**	59*P5A120E24**22	48,000	12.4	15.0
3838050	24ABC649A**30	CAP**6025A**+TDR		48,000	11.7	14.0
3837962	24ABC649A**30	CNPH*4821A**	58CV(A,X)090−16	47,000	12.0	14.5
3837963	24ABC649A**30	CNPH*4821A**	58CV(A,X)110−20	47,000	12.2	14.5
3837964	24ABC649A**30	CNPH*4821A**	58CV(A,X)135−22	47,000	12.2	14.5
3837965	24ABC649A**30	CNPH*4821A**	58CV(A,X)155−22	47,000	12.5	15.0
4137811	24ABC649A**30	CNPH*4821A**	58HDV080−−20	47,000	11.5	14.0
4137812	24ABC649A**30	CNPH*4821A**	58HDV100−−20	47,000	12.0	14.0
3838034	24ABC649A**30	CNPH*4821A**	58ME(B,C)080−16	47,000	12.0	14.5
3838035	24ABC649A**30	CNPH*4821A**	58ME(B,C)100−20	47,000	12.0	14.5
3838036	24ABC649A**30	CNPH*4821A**	58ME(B,C)120−20	47,500	12.0	14.5
3837959	24ABC649A**30	CNPH*4821A**	58MV(B,C)080−20	46,500	12.0	14.0
3837960	24ABC649A**30	CNPH*4821A**	58MV(B,C)100−20	46,500	12.0	14.0

See notes on page 52

COMBINATION RATINGS

AHRI Ref. No.	Model Number	Indoor Model	Furnace Model	Capacity	EER	SEER
3837961	24ABC649A**30	CNPH*4821A**	58MV(B,C)120−20	46,500	12.0	14.5
3838010	24ABC649A**30	CNPH*4821A**	58PH*070−16	46,500	11.2	13.5
3838011	24ABC649A**30	CNPH*4821A**	58PH*090−16	47,000	12.0	14.5
3838012	24ABC649A**30	CNPH*4821A**	58PH*110−20	47,000	12.2	14.5
3838013	24ABC649A**30	CNPH*4821A**	58PH*135−20	47,000	12.2	14.5
4137795	24ABC649A**30	CNPH*4821A**	58VLR120−20	46,500	12.0	14.5
4137794	24ABC649A**30	CNPH*4821A**	58VMR120−20	46,500	12.0	14.0
4745064	24ABC649A**30	CNPH*4821A**	59*N*A100V21**20	46,500	12.0	14.5
4745065	24ABC649A**30	CNPH*4821A**	59*N*A120V24**22	46,500	12.0	14.5
4745066	24ABC649A**30	CNPH*4821A**	59*P5A080E17**16	46,500	11.5	14.0
4745067	24ABC649A**30	CNPH*4821A**	59*P5A100E21**16	46,500	11.8	14.2
4745068	24ABC649A**30	CNPH*4821A**	59*P5A120E24**22	47,000	12.0	14.5
4137821	24ABC649A**30	CNPH*4821A**	OVLAAB060154	47,500	11.5	14.0
3837958	24ABC649A**30	CNPH*4821A**+TDR		47,500	11.5	13.5
3837970	24ABC649A**30	CNPH*6024A**	58CV(A,X)090−16	47,500	12.2	14.5
3837971	24ABC649A**30	CNPH*6024A**	58CV(A,X)110−20	47,500	12.2	14.5
3837972	24ABC649A**30	CNPH*6024A**	58CV(A,X)135−22	48,000	12.5	15.0
3837973	24ABC649A**30	CNPH*6024A**	58CV(A,X)155−22	48,000	12.5	15.0
4137813	24ABC649A**30	CNPH*6024A**	58HDV080−−20	48,000	12.0	14.5
4137814	24ABC649A**30	CNPH*6024A**	58HDV100−−20	47,500	12.0	14.5
3838037	24ABC649A**30	CNPH*6024A**	58ME(B,C)080−16	47,500	12.0	14.5
3838038	24ABC649A**30	CNPH*6024A**	58ME(B,C)100−20	48,000	12.5	15.0
3838039	24ABC649A**30	CNPH*6024A**	58ME(B,C)120−20	48,000	12.5	14.0
3837967	24ABC649A**30	CNPH*6024A**	58MV(B,C)080−20	47,500	12.2	14.5
3837968	24ABC649A**30	CNPH*6024A**	58MV(B,C)100−20	47,500	12.2	14.5
3837969	24ABC649A**30	CNPH*6024A**	58MV(B,C)120−20	47,500	12.2	14.5
3838014	24ABC649A**30	CNPH*6024A**	58PH*070−16	47,500	11.5	13.5
3838015	24ABC649A**30	CNPH*6024A**	58PH*090−16	48,000	12.2	14.5
3838016	24ABC649A**30	CNPH*6024A**	58PH*110−20	48,000	12.5	15.0
3838017	24ABC649A**30	CNPH*6024A**	58PH*135−20	48,000	12.2	15.0
4137797	24ABC649A**30	CNPH*6024A**	58VLR120−20	47,500	12.0	14.5
4137796	24ABC649A**30	CNPH*6024A**	58VMR120−20	47,500	12.0	14.5
4745069	24ABC649A**30	CNPH*6024A**	59*N*A100V21**20	47,000	12.0	14.5
4745070	24ABC649A**30	CNPH*6024A**	59*N*A120V24**22	47,000	12.5	15.0
4745071	24ABC649A**30	CNPH*6024A**	59*P5A080E17**16	47,500	11.8	14.2
4745072	24ABC649A**30	CNPH*6024A**	59*P5A100E21**16	47,500	12.0	14.5
4745073	24ABC649A**30	CNPH*6024A**	59*P5A120E24**22	48,000	12.4	15.0
4137822	24ABC649A**30	CNPH*6024A**	OVLAAB060154	48,000	12.0	14.5
3837966	24ABC649A**30	CNPH*6024A**+TDR		48,000	11.7	14.0
4561882	24ABC649A**30	CNPH*6124A**	58CV(A,X)110−20	47,500	12.2	14.5
4561883	24ABC649A**30	CNPH*6124A**	58CV(A,X)135−22	48,000	12.2	15.0
4561884	24ABC649A**30	CNPH*6124A**	58CV(A,X)155−22	48,000	12.5	15.0
4137815	24ABC649A**30	CNPH*6124A**	58HDV080−−20	48,000	12.0	14.5
4137816	24ABC649A**30	CNPH*6124A**	58HDV100−−20	48,000	12.0	14.5
4561887	24ABC649A**30	CNPH*6124A**	58MEC100−20	48,000	12.2	15.0
4561888	24ABC649A**30	CNPH*6124A**	58MEC120−20	48,000	12.2	15.0
4561881	24ABC649A**30	CNPH*6124A**	58MV(B,C)120−20	47,500	12.2	14.5
4561885	24ABC649A**30	CNPH*6124A**	58PH*110−20	48,000	12.2	15.0
4561886	24ABC649A**30	CNPH*6124A**	58PH*135−20	48,000	12.2	14.5
4137799	24ABC649A**30	CNPH*6124A**	58VLR120−20	47,500	12.0	14.5
4137798	24ABC649A**30	CNPH*6124A**	58VMR120−20	47,500	12.0	14.5
4745074	24ABC649A**30	CNPH*6124A**	59*N*A100V21**20	47,500	12.0	14.5
4745075	24ABC649A**30	CNPH*6124A**	59*N*A120V24**22	47,500	12.5	15.0
4745076	24ABC649A**30	CNPH*6124A**	59*P5A100E21**16	47,500	12.0	14.5
4745077	24ABC649A**30	CNPH*6124A**	59*P5A120E24**22	48,000	12.4	15.0
4137823	24ABC649A**30	CNPH*6124A**	OVLAAB060154	48,000	12.0	14.5
4561880	24ABC649A**30	CNPH*6124A**+TDR		48,000	11.7	14.0
3837949	24ABC649A**30	CNPV*4821A**	58CV(A,X)110−20	47,000	12.2	14.5
3838031	24ABC649A**30	CNPV*4821A**	58ME(B,C)100−20	47,000	12.0	14.5
3837947	24ABC649A**30	CNPV*4821A**	58MV(B,C)080−20	46,500	12.0	14.0
3837948	24ABC649A**30	CNPV*4821A**	58MV(B,C)100−20	46,500	12.0	14.0
3838006	24ABC649A**30	CNPV*4821A**	58PH*090−16	47,000	12.0	14.5
3838007	24ABC649A**30	CNPV*4821A**	58PH*110−20	47,000	12.2	14.5
4141784	24ABC649A**30	CNPV*4821A**	58UVB080−20	46,500	12.0	14.0
4141785	24ABC649A**30	CNPV*4821A**	58UVB100−20	46,500	12.0	14.0
4137793	24ABC649A**30	CNPV*4821A**	58VLR120−20	46,500	12.0	14.5
4137792	24ABC649A**30	CNPV*4821A**	58VMR120−20	46,500	12.0	14.0
4745049	24ABC649A**30	CNPV*4821A**	59*N*A100V21**20	46,500	12.0	14.5
4745050	24ABC649A**30	CNPV*4821A**	59*P5A080E17**16	46,500	11.5	14.0
4745051	24ABC649A**30	CNPV*4821A**	59*P5A100E21**16	46,500	11.8	14.2
3837946	24ABC649A**30	CNPV*4821A**+TDR		47,500	11.5	13.5
3837952	24ABC649A**30	CNPV*4824A**	58CV(A,X)135−22	47,000	12.2	14.5
3837953	24ABC649A**30	CNPV*4824A**	58CV(A,X)155−22	47,000	12.5	15.0

See notes on page 52

COMBINATION RATINGS

AHRI Ref. No.	Model Number	Indoor Model	Furnace Model	Capacity	EER	SEER
4137808	24ABC649A**30	CNPV*4824A**	58HDV100−−20	47,000	12.0	14.0
3838032	24ABC649A**30	CNPV*4824A**	58ME(B,C)120−20	47,000	12.0	14.5
3837951	24ABC649A**30	CNPV*4824A**	58MV(B,C)120−20	46,500	12.0	14.5
3838008	24ABC649A**30	CNPV*4824A**	58PH*135−20	47,000	12.2	14.5
4141786	24ABC649A**30	CNPV*4824A**	58UVB120−20	46,500	12.0	14.5
4745052	24ABC649A**30	CNPV*4824A**	59*N*A100V21**20	46,500	12.0	14.5
4745053	24ABC649A**30	CNPV*4824A**	59*N*A120V24**22	46,500	12.0	14.5
4745054	24ABC649A**30	CNPV*4824A**	59*P5A100E21**16	46,500	11.8	14.2
4745055	24ABC649A**30	CNPV*4824A**	59*P5A120E24**22	47,000	12.0	14.5
3837950	24ABC649A**30	CNPV*4824A**+TDR		47,500	11.5	13.5
3838047	24ABC649A**30	CNPV*6024A**	58CV(A,X)110−20	47,500	12.5	15.0
3837956	24ABC649A**30	CNPV*6024A**	58CV(A,X)135−22	48,000	12.5	15.0
3837957	24ABC649A**30	CNPV*6024A**	58CV(A,X)155−22	48,000	12.5	15.0
4137809	24ABC649A**30	CNPV*6024A**	58HDV100−−20	47,500	12.0	14.5
3838046	24ABC649A**30	CNPV*6024A**	58ME(B,C)100−20	48,000	12.5	15.0
3838033	24ABC649A**30	CNPV*6024A**	58ME(B,C)120−20	48,000	12.5	15.0
3837955	24ABC649A**30	CNPV*6024A**	58MV(B,C)120−20	47,500	12.2	14.5
3838048	24ABC649A**30	CNPV*6024A**	58PH*110−20	48,000	12.5	15.0
3838009	24ABC649A**30	CNPV*6024A**	58PH*135−20	48,000	12.2	15.0
4141787	24ABC649A**30	CNPV*6024A**	58UVB120−20	47,500	12.2	14.5
4745056	24ABC649A**30	CNPV*6024A**	59*N*A100V21**20	47,000	12.0	14.5
4745057	24ABC649A**30	CNPV*6024A**	59*N*A120V24**22	47,000	12.5	15.0
4745058	24ABC649A**30	CNPV*6024A**	59*P5A100E21**16	47,500	12.0	14.5
4745059	24ABC649A**30	CNPV*6024A**	59*P5A120E24**22	48,000	12.4	15.0
3837954	24ABC649A**30	CNPV*6024A**+TDR		48,000	11.7	14.0
4561873	24ABC649A**30	CNPV*6124A**	58CV(A,X)110−20	48,000	12.2	15.0
4561874	24ABC649A**30	CNPV*6124A**	58CV(A,X)135−22	48,000	12.5	15.2
4561875	24ABC649A**30	CNPV*6124A**	58CV(A,X)155−22	48,000	12.7	15.0
4137810	24ABC649A**30	CNPV*6124A**	58HDV100−−20	48,000	12.0	14.5
4561878	24ABC649A**30	CNPV*6124A**	58MEC100−20	48,000	12.5	15.0
4561879	24ABC649A**30	CNPV*6124A**	58MEC120−20	48,000	12.5	15.0
4561872	24ABC649A**30	CNPV*6124A**	58MV(B,C)120−20	48,000	12.2	15.0
4561876	24ABC649A**30	CNPV*6124A**	58PH*110−20	48,000	12.5	15.0
4561877	24ABC649A**30	CNPV*6124A**	58PH*135−20	48,000	12.2	15.0
4745060	24ABC649A**30	CNPV*6124A**	59*N*A100V21**20	47,500	12.4	15.0
4745061	24ABC649A**30	CNPV*6124A**	59*N*A120V24**22	47,500	12.5	15.2
4745062	24ABC649A**30	CNPV*6124A**	59*P5A100E21**16	48,000	12.0	14.5
4745063	24ABC649A**30	CNPV*6124A**	59*P5A120E24**22	48,500	12.5	15.2
4561871	24ABC649A**30	CNPV*6124A**+TDR		48,000	11.7	14.0
3837979	24ABC649A**30	CSPH*4812A**	58CV(A,X)090−16	47,000	12.0	14.5
3837980	24ABC649A**30	CSPH*4812A**	58CV(A,X)110−20	47,000	12.2	14.5
3837981	24ABC649A**30	CSPH*4812A**	58CV(A,X)135−22	47,500	12.2	14.5
3837982	24ABC649A**30	CSPH*4812A**	58CV(A,X)155−22	47,000	12.2	14.5
4137817	24ABC649A**30	CSPH*4812A**	58HDV080−−20	47,500	11.5	14.0
4137818	24ABC649A**30	CSPH*4812A**	58HDV100−−20	47,000	12.0	14.0
3838040	24ABC649A**30	CSPH*4812A**	58ME(B,C)080−16	47,000	12.0	14.5
3838041	24ABC649A**30	CSPH*4812A**	58ME(B,C)100−20	47,000	12.0	14.5
3838042	24ABC649A**30	CSPH*4812A**	58ME(B,C)120−20	47,000	12.0	14.5
3837976	24ABC649A**30	CSPH*4812A**	58MV(B,C)080−20	46,500	11.7	14.0
3837977	24ABC649A**30	CSPH*4812A**	58MV(B,C)100−20	46,500	12.0	14.0
3837978	24ABC649A**30	CSPH*4812A**	58MV(B,C)120−20	47,000	12.0	14.5
3838018	24ABC649A**30	CSPH*4812A**	58PH*070−16	46,500	11.2	13.5
3838019	24ABC649A**30	CSPH*4812A**	58PH*090−16	47,000	12.0	14.5
3838020	24ABC649A**30	CSPH*4812A**	58PH*110−20	47,000	12.2	14.5
3838021	24ABC649A**30	CSPH*4812A**	58PH*135−20	47,000	12.2	14.5
4137801	24ABC649A**30	CSPH*4812A**	58VLR120−20	47,000	12.0	14.5
4137800	24ABC649A**30	CSPH*4812A**	58VMR120−20	47,000	12.0	14.0
4745078	24ABC649A**30	CSPH*4812A**	59*N*A100V21**20	46,500	12.0	14.5
4745079	24ABC649A**30	CSPH*4812A**	59*N*A120V24**22	46,500	12.0	14.5
4745080	24ABC649A**30	CSPH*4812A**	59*P5A100E21**16	47,000	11.8	14.2
4745081	24ABC649A**30	CSPH*4812A**	59*P5A120E24**22	47,000	12.0	14.5
4137824	24ABC649A**30	CSPH*4812A**	OVLAAB060154	48,000	11.5	14.0
3837975	24ABC649A**30	CSPH*4812A**+TDR		47,500	11.7	13.5
3837987	24ABC649A**30	CSPH*6012A**	58CV(A,X)090−16	48,000	12.2	14.5
3837988	24ABC649A**30	CSPH*6012A**	58CV(A,X)110−20	48,000	12.5	15.0
3837989	24ABC649A**30	CSPH*6012A**	58CV(A,X)135−22	48,000	12.5	15.0
3837990	24ABC649A**30	CSPH*6012A**	58CV(A,X)155−22	48,000	12.5	15.0
4137819	24ABC649A**30	CSPH*6012A**	58HDV080−−20	48,000	12.0	14.5
4137820	24ABC649A**30	CSPH*6012A**	58HDV100−−20	48,000	12.0	14.5
3838043	24ABC649A**30	CSPH*6012A**	58ME(B,C)080−16	48,000	12.0	14.5
3838044	24ABC649A**30	CSPH*6012A**	58ME(B,C)100−20	48,000	12.5	15.0
3838045	24ABC649A**30	CSPH*6012A**	58ME(B,C)120−20	48,000	12.5	15.0
3837984	24ABC649A**30	CSPH*6012A**	58MV(B,C)080−20	47,500	12.2	14.5

See notes on page 52

COMBINATION RATINGS

AHRI Ref. No.	Model Number	Indoor Model	Furnace Model	Capacity	EER	SEER
3837985	24ABC649A**30	CSPH*6012A**	58MV(B,C)100−20	48,000	12.2	14.5
3837986	24ABC649A**30	CSPH*6012A**	58MV(B,C)120−20	48,000	12.2	14.5
3838022	24ABC649A**30	CSPH*6012A**	58PH*070−16	47,500	11.5	13.5
3838023	24ABC649A**30	CSPH*6012A**	58PH*090−16	48,000	12.2	14.5
3838024	24ABC649A**30	CSPH*6012A**	58PH*110−20	48,000	12.5	15.0
3838025	24ABC649A**30	CSPH*6012A**	58PH*135−20	48,000	12.2	15.0
4137803	24ABC649A**30	CSPH*6012A**	58VLR120−20	47,500	12.5	15.0
4137802	24ABC649A**30	CSPH*6012A**	58VMR120−20	47,500	12.0	14.5
4745082	24ABC649A**30	CSPH*6012A**	59*N*A100V21**20	47,500	12.0	14.5
4745083	24ABC649A**30	CSPH*6012A**	59*N*A120V24**22	47,500	12.5	15.2
4745084	24ABC649A**30	CSPH*6012A**	59*P5A080E17**16	47,500	11.8	14.2
4745085	24ABC649A**30	CSPH*6012A**	59*P5A100E21**16	47,500	12.0	14.5
4745086	24ABC649A**30	CSPH*6012A**	59*P5A120E24**22	48,000	12.5	15.0
4137826	24ABC649A**30	CSPH*6012A**	OVLAAB048112	48,000	11.5	14.0
4137825	24ABC649A**30	CSPH*6012A**	OVLAAB060154	49,000	12.0	14.5
3837983	24ABC649A**30	CSPH*6012A**+TDR		48,000	11.7	14.0
3837995	24ABC649A**30	FE4AN(B,F)005+UI		48,000	12.5	15.0
3837996	24ABC649A**30	FE4ANB006+UI		48,000	13.0	15.5
3919870	24ABC649A**30	FV4CN(B,F)005		48,000	12.5	15.0
3919871	24ABC649A**30	FV4CNB006		48,000	13.0	15.5
3631918	24ABC660A**30	†CNPV*6124A**+TDR		56,000	12.5	15.0
3630660	24ABC660A**30	CAP**6021A**	58CV(A,X)110−20	54,000	12.5	15.2
3630711	24ABC660A**30	CAP**6021A**	58CV(A,X)135−22	54,500	12.5	15.5
3630762	24ABC660A**30	CAP**6021A**	58CV(A,X)155−22	54,500	13.0	16.0
3631103	24ABC660A**30	CAP**6021A**	58ME(B,C)100−20	54,000	12.5	15.5
3631131	24ABC660A**30	CAP**6021A**	58ME(B,C)120−20	54,000	13.0	16.0
3631607	24ABC660A**30	CAP**6021A**	58PH*090−16	54,000	12.5	15.5
3631659	24ABC660A**30	CAP**6021A**	58PH*110−20	54,000	13.0	16.0
3631687	24ABC660A**30	CAP**6021A**	58PH*135−20	54,000	12.5	15.5
3631919	24ABC660A**30	CAP**6021A**+TDR		54,000	12.5	15.0
3630661	24ABC660A**30	CAP**6024A**	58CV(A,X)110−20	54,000	12.5	15.2
3630712	24ABC660A**30	CAP**6024A**	58CV(A,X)135−22	54,000	13.0	16.0
3630763	24ABC660A**30	CAP**6024A**	58CV(A,X)155−22	54,500	13.0	16.0
3631104	24ABC660A**30	CAP**6024A**	58ME(B,C)100−20	54,000	13.0	16.0
3631132	24ABC660A**30	CAP**6024A**	58ME(B,C)120−20	54,000	13.0	16.0
3631608	24ABC660A**30	CAP**6024A**	58PH*090−16	54,000	12.5	15.5
3631660	24ABC660A**30	CAP**6024A**	58PH*110−20	54,000	13.0	16.0
3631688	24ABC660A**30	CAP**6024A**	58PH*135−20	54,000	12.5	15.5
3631694	24ABC660A**30	CAP**6024A**	58VLR120−20	54,000	13.0	15.2
4745001	24ABC660A**30	CAP**6024A**	59*N*A120V24**22	54,000	12.7	15.5
4745002	24ABC660A**30	CAP**6024A**	59*P5A120E24**22	54,000	12.7	15.5
3631920	24ABC660A**30	CAP**6024A**+TDR		55,000	12.5	15.0
4745003	24ABC660A**30	CAP**6025A**	59*N*A120V24**22	54,000	12.7	15.5
4745004	24ABC660A**30	CAP**6025A**	59*P5A120E24**22	54,000	12.7	15.5
3631925	24ABC660A**30	CAP**6025A**+TDR		55,000	12.5	15.0
3630663	24ABC660A**30	CNPH*6024A**	58CV(A,X)110−20	54,000	12.5	15.3
3630714	24ABC660A**30	CNPH*6024A**	58CV(A,X)135−22	54,000	13.0	16.0
3630765	24ABC660A**30	CNPH*6024A**	58CV(A,X)155−22	54,500	13.0	16.0
3631056	24ABC660A**30	CNPH*6024A**	58ME(B,C)080−16	54,000	12.5	15.2
3631106	24ABC660A**30	CNPH*6024A**	58ME(B,C)100−20	54,000	12.5	15.5
3631134	24ABC660A**30	CNPH*6024A**	58ME(B,C)120−20	54,500	13.0	16.0
3631610	24ABC660A**30	CNPH*6024A**	58PH*090−16	54,000	12.5	15.3
3631662	24ABC660A**30	CNPH*6024A**	58PH*110−20	54,000	12.5	15.5
3631690	24ABC660A**30	CNPH*6024A**	58PH*135−20	54,000	12.5	15.5
3631696	24ABC660A**30	CNPH*6024A**	58VLR120−20	54,000	12.5	15.2
4745009	24ABC660A**30	CNPH*6024A**	59*N*A120V24**22	54,000	12.7	15.5
4745010	24ABC660A**30	CNPH*6024A**	59*P5A120E24**22	54,000	12.7	15.5
3631922	24ABC660A**30	CNPH*6024A**+TDR		55,000	12.5	14.5
3630665	24ABC660A**30	CNPH*6124A**	58CV(A,X)110−20	54,000	12.5	15.2
3630716	24ABC660A**30	CNPH*6124A**	58CV(A,X)135−22	54,500	13.0	16.0
3630767	24ABC660A**30	CNPH*6124A**	58CV(A,X)155−22	54,500	13.0	16.0
3631108	24ABC660A**30	CNPH*6124A**	58ME(B,C)100−20	54,000	13.0	16.0
3631612	24ABC660A**30	CNPH*6124A**	58PH*090−16	54,000	12.5	15.5
3631664	24ABC660A**30	CNPH*6124A**	58PH*110−20	55,000	13.0	16.0
3631692	24ABC660A**30	CNPH*6124A**	58PH*135−20	54,000	13.0	16.0
4745011	24ABC660A**30	CNPH*6124A**	59*N*A120V24**22	54,000	12.7	15.5
4745012	24ABC660A**30	CNPH*6124A**	59*P5A120E24**22	54,000	12.7	15.5
3631924	24ABC660A**30	CNPH*6124A**+TDR		55,000	12.5	15.0
3630662	24ABC660A**30	CNPV*6024A**	58CV(A,X)110−20	54,000	12.5	15.2
3630713	24ABC660A**30	CNPV*6024A**	58CV(A,X)135−22	54,000	13.0	16.0
3630764	24ABC660A**30	CNPV*6024A**	58CV(A,X)155−22	54,500	13.0	16.0
3631105	24ABC660A**30	CNPV*6024A**	58ME(B,C)100−20	54,000	12.5	15.5

See notes on page 52

COMBINATION RATINGS

AHRI Ref. No.	Model Number	Indoor Model	Furnace Model	Capacity	EER	SEER
3631133	24ABC660A**30	CNPV*6024A**	58ME(B,C)120−20	54,000	13.0	16.0
3631609	24ABC660A**30	CNPV*6024A**	58PH*090−16	54,000	12.5	15.3
3631661	24ABC660A**30	CNPV*6024A**	58PH*110−20	54,000	13.0	15.5
3631689	24ABC660A**30	CNPV*6024A**	58PH*135−20	54,000	12.5	15.5
3631695	24ABC660A**30	CNPV*6024A**	58VLR120−20	54,000	12.5	15.2
4745005	24ABC660A**30	CNPV*6024A**	59*N*A120V24**22	54,000	12.7	15.5
4745006	24ABC660A**30	CNPV*6024A**	59*P5A120E24**22	54,000	12.7	15.5
3631921	24ABC660A**30	CNPV*6024A**+TDR		55,000	12.5	14.5
3630659	24ABC660A**30	CNPV*6124A**	58CV(A,X)110−20	55,000	13.0	16.0
3630710	24ABC660A**30	CNPV*6124A**	58CV(A,X)135−22	55,000	13.0	16.0
3630761	24ABC660A**30	CNPV*6124A**	58CV(A,X)155−22	55,500	13.0	16.0
3631102	24ABC660A**30	CNPV*6124A**	58ME(B,C)100−20	55,000	13.0	16.0
3631130	24ABC660A**30	CNPV*6124A**	58ME(B,C)120−20	55,000	13.0	16.0
3631427	24ABC660A**30	CNPV*6124A**	58MV(B,C)120−20	55,000	12.5	15.5
3631606	24ABC660A**30	CNPV*6124A**	58PH*090−16	55,000	13.0	16.0
3631658	24ABC660A**30	CNPV*6124A**	58PH*110−20	55,000	13.0	16.0
3631686	24ABC660A**30	CNPV*6124A**	58PH*135−20	55,000	13.0	16.0
3632218	24ABC660A**30	CNPV*6124A**	58UVB120−20	55,000	12.5	15.5
3631693	24ABC660A**30	CNPV*6124A**	58VLR120−20	55,000	12.5	15.2
3631698	24ABC660A**30	CNPV*6124A**	58VMR120−20	55,000	12.5	15.0
4745007	24ABC660A**30	CNPV*6124A**	59*N*A120V24**22	54,500	13.0	16.0
4745008	24ABC660A**30	CNPV*6124A**	59*P5A120E24**22	54,500	13.0	16.0
3630664	24ABC660A**30	CSPH*6012A**	58CV(A,X)110−20	54,000	12.5	15.5
3630715	24ABC660A**30	CSPH*6012A**	58CV(A,X)135−22	54,500	13.0	16.0
3630766	24ABC660A**30	CSPH*6012A**	58CV(A,X)155−22	55,000	13.0	16.0
3631057	24ABC660A**30	CSPH*6012A**	58ME(B,C)080−16	54,000	12.5	15.2
3631107	24ABC660A**30	CSPH*6012A**	58ME(B,C)100−20	54,000	13.0	16.0
3631135	24ABC660A**30	CSPH*6012A**	58ME(B,C)120−20	54,500	13.0	16.0
3631428	24ABC660A**30	CSPH*6012A**	58MV(B,C)120−20	54,000	12.5	15.2
3631611	24ABC660A**30	CSPH*6012A**	58PH*090−16	54,000	12.5	15.5
3631663	24ABC660A**30	CSPH*6012A**	58PH*110−20	55,000	13.0	16.0
3631691	24ABC660A**30	CSPH*6012A**	58PH*135−20	54,500	13.0	16.0
3631697	24ABC660A**30	CSPH*6012A**	58VLR120−20	54,000	12.5	15.2
4745013	24ABC660A**30	CSPH*6012A**	59*N*A120V24**22	54,000	13.0	16.0
4745014	24ABC660A**30	CSPH*6012A**	59*P5A120E24**22	54,500	13.0	16.0
3631923	24ABC660A**30	CSPH*6012A**+TDR		55,000	12.5	14.5
3804415	24ABC660A**30	FB4CNF060		54,000	13.0	15.0
3631719	24ABC660A**30	FE4ANB006+UI		55,000	13.0	16.0
3631815	24ABC660A**30	FV4CNB006		55,000	13.0	16.0
3632308	24ABC660A**30	FX4DN(B,F)061		55,500	13.5	16.0
3632315	24ABC660A**30	FY5BNB060		54,500	12.0	14.0
3838051	24ABC661A**30	†CNPV*6124A**+TDR		59,500	12.0	14.5
3838053	24ABC661A**30	CAP**6021A**	58CV(A,X)110−20	58,000	12.0	14.5
3838055	24ABC661A**30	CAP**6021A**	58ME(B,C)100−20	57,500	12.5	14.5
3838054	24ABC661A**30	CAP**6021A**	58PH*110−20	58,000	12.5	14.5
3838052	24ABC661A**30	CAP**6021A**+TDR		58,000	12.0	14.0
3838111	24ABC661A**30	CAP**6024A**	58CV(A,X)110−20	58,000	12.5	14.5
3838057	24ABC661A**30	CAP**6024A**	58CV(A,X)135−22	58,000	12.5	14.5
3838058	24ABC661A**30	CAP**6024A**	58CV(A,X)155−22	58,000	12.5	14.5
3838113	24ABC661A**30	CAP**6024A**	58ME(B,C)100−20	58,000	12.5	14.5
3838060	24ABC661A**30	CAP**6024A**	58ME(B,C)120−20	58,000	12.5	14.5
3838112	24ABC661A**30	CAP**6024A**	58PH*110−20	58,000	12.5	14.5
3838059	24ABC661A**30	CAP**6024A**	58PH*135−20	58,000	12.5	14.5
3838114	24ABC661A**30	CAP**6024A**	58VLR120−20	58,000	12.0	14.0
4745015	24ABC661A**30	CAP**6024A**	59*N*A120V24**22	58,000	12.0	14.5
4745016	24ABC661A**30	CAP**6024A**	59*P5A120E24**22	58,000	12.0	14.5
3838056	24ABC661A**30	CAP**6024A**+TDR		59,000	12.0	14.0
3838062	24ABC661A**30	CAP**6025A**	58CV(A,X)135−22	58,000	12.5	14.5
3838063	24ABC661A**30	CAP**6025A**	58CV(A,X)155−22	58,000	12.5	14.5
3838065	24ABC661A**30	CAP**6025A**	58ME(B,C)120−20	58,000	12.5	14.5
3838064	24ABC661A**30	CAP**6025A**	58PH*135−20	58,000	12.5	14.5
4745017	24ABC661A**30	CAP**6025A**	59*N*A120V24**22	58,000	12.0	14.5
4745018	24ABC661A**30	CAP**6025A**	59*P5A120E24**22	58,000	12.0	14.5
3838061	24ABC661A**30	CAP**6025A**+TDR		59,000	12.0	14.0
3838077	24ABC661A**30	CNPH*6024A**	58CV(A,X)110−20	58,000	12.5	14.5
3838078	24ABC661A**30	CNPH*6024A**	58CV(A,X)135−22	58,000	12.5	14.5
3838079	24ABC661A**30	CNPH*6024A**	58CV(A,X)155−22	58,000	13.0	15.2
3838082	24ABC661A**30	CNPH*6024A**	58ME(B,C)080−16	57,500	12.0	14.0
3838083	24ABC661A**30	CNPH*6024A**	58ME(B,C)100−20	58,000	12.5	14.5
3838084	24ABC661A**30	CNPH*6024A**	58ME(B,C)120−20	58,000	12.5	14.5
3838080	24ABC661A**30	CNPH*6024A**	58PH*110−20	58,000	12.5	14.5
3838081	24ABC661A**30	CNPH*6024A**	58PH*135−20	58,000	12.5	14.5

See notes on page 52

COMBINATION RATINGS

AHRI Ref. No.	Model Number	Indoor Model	Furnace Model	Capacity	EER	SEER
3838124	24ABC661A**30	CNPH*6024A**	58VLR120−20	58,000	12.0	14.0
4745023	24ABC661A**30	CNPH*6024A**	59*N*A120V24**22	58,000	12.0	14.5
4745024	24ABC661A**30	CNPH*6024A**	59*P5A120E24**22	58,000	12.0	14.5
3838076	24ABC661A**30	CNPH*6024A**+TDR		59,000	12.0	14.0
3838086	24ABC661A**30	CNPH*6124A**	58CV(A,X)110−20	58,000	12.5	14.5
3838087	24ABC661A**30	CNPH*6124A**	58CV(A,X)135−22	58,500	12.5	14.5
3838088	24ABC661A**30	CNPH*6124A**	58CV(A,X)155−22	58,500	13.0	15.2
3838091	24ABC661A**30	CNPH*6124A**	58ME(B,C)100−20	58,000	12.5	14.5
3838092	24ABC661A**30	CNPH*6124A**	58ME(B,C)120−20	58,000	12.5	14.5
3838089	24ABC661A**30	CNPH*6124A**	58PH*110−20	58,000	12.5	14.5
3838090	24ABC661A**30	CNPH*6124A**	58PH*135−20	58,000	12.5	14.5
4745025	24ABC661A**30	CNPH*6124A**	59*N*A120V24**22	58,500	12.0	14.5
4745026	24ABC661A**30	CNPH*6124A**	59*P5A120E24**22	58,000	12.0	14.5
3838085	24ABC661A**30	CNPH*6124A**+TDR		58,500	12.0	14.0
3838115	24ABC661A**30	CNPV*6024A**	58CV(A,X)110−20	58,000	12.0	14.5
3838067	24ABC661A**30	CNPV*6024A**	58CV(A,X)135−22	58,000	12.5	14.5
3838068	24ABC661A**30	CNPV*6024A**	58CV(A,X)155−22	58,000	13.0	15.2
3838117	24ABC661A**30	CNPV*6024A**	58ME(B,C)100−20	58,000	12.5	14.5
3838070	24ABC661A**30	CNPV*6024A**	58ME(B,C)120−20	58,000	12.5	14.5
3838116	24ABC661A**30	CNPV*6024A**	58PH*110−20	58,000	12.5	14.5
3838069	24ABC661A**30	CNPV*6024A**	58PH*135−20	58,000	12.5	14.5
3838122	24ABC661A**30	CNPV*6024A**	58VLR120−20	58,000	12.0	14.0
4745019	24ABC661A**30	CNPV*6024A**	59*N*A120V24**22	58,000	12.0	14.5
4745020	24ABC661A**30	CNPV*6024A**	59*P5A120E24**22	58,000	12.0	14.5
3838066	24ABC661A**30	CNPV*6024A**+TDR		59,000	12.0	14.0
3838118	24ABC661A**30	CNPV*6124A**	58CV(A,X)110−20	58,500	12.5	14.5
3838072	24ABC661A**30	CNPV*6124A**	58CV(A,X)135−22	59,000	13.0	15.2
3838073	24ABC661A**30	CNPV*6124A**	58CV(A,X)155−22	59,000	13.0	15.2
3838119	24ABC661A**30	CNPV*6124A**	58ME(B,C)100−20	58,500	12.5	14.5
3838075	24ABC661A**30	CNPV*6124A**	58ME(B,C)120−20	58,500	13.0	15.2
3838071	24ABC661A**30	CNPV*6124A**	58MV(B,C)120−20	58,500	12.5	14.5
3838123	24ABC661A**30	CNPV*6124A**	58PH*110−20	59,000	13.0	15.2
3838074	24ABC661A**30	CNPV*6124A**	58PH*135−20	58,500	12.5	14.5
3838120	24ABC661A**30	CNPV*6124A**	58VLR120−20	59,000	12.5	14.5
4745021	24ABC661A**30	CNPV*6124A**	59*N*A120V24**22	59,000	12.5	15.0
4745022	24ABC661A**30	CNPV*6124A**	59*P5A120E24**22	59,000	12.5	15.0
3838095	24ABC661A**30	CSPH*6012A**	58CV(A,X)110−20	58,500	12.5	14.5
3838096	24ABC661A**30	CSPH*6012A**	58CV(A,X)135−22	58,500	12.5	14.5
3838097	24ABC661A**30	CSPH*6012A**	58CV(A,X)155−22	58,500	13.0	15.2
3838100	24ABC661A**30	CSPH*6012A**	58ME(B,C)080−16	57,500	12.5	14.5
3838101	24ABC661A**30	CSPH*6012A**	58ME(B,C)100−20	58,000	12.5	14.5
3838102	24ABC661A**30	CSPH*6012A**	58ME(B,C)120−20	58,500	13.0	15.2
3838094	24ABC661A**30	CSPH*6012A**	58MV(B,C)120−20	58,000	12.5	14.0
3838098	24ABC661A**30	CSPH*6012A**	58PH*110−20	58,500	12.5	14.5
3838099	24ABC661A**30	CSPH*6012A**	58PH*135−20	58,500	12.5	14.5
3838121	24ABC661A**30	CSPH*6012A**	58VLR120−20	58,500	12.5	14.5
4745027	24ABC661A**30	CSPH*6012A**	59*N*A120V24**22	58,500	12.5	15.0
4745028	24ABC661A**30	CSPH*6012A**	59*P5A120E24**22	58,500	12.0	14.5
3838093	24ABC661A**30	CSPH*6012A**+TDR		59,000	12.0	14.0
3888362	24ABC661A**30	FB4CNF060		58,000	12.0	14.0
3838106	24ABC661A**30	FE4ANB006+UI		59,000	13.0	15.0
3838108	24ABC661A**30	FV4CNB006		59,000	13.0	15.0
3838105	24ABC661A**30	FX4DN(B,F)061		59,500	12.5	15.0
3838104	24ABC661A**30	FY5BNB060		59,000	12.0	13.5

† Tested combination
EER — Energy Efficiency Ratio
SEER — Seasonal Energy Efficiency Ratio
TDR — Time−Delay Relay. In most cases, only 1 method should be used to achieve TDR function. Using more than 1 method in a system may cause degradation in performance. Use either the accessory Time−Delay Relay KAATD0101TDR or a furnace equipped with TDR. Most Carrier furnaces are equipped with TDR.
TXV — Thermostatic Expansion Valve
UI — User Interface
NOTES:
1. Ratings are net values reflecting the effects of circulating fan motor heat. Supplemental electric heat is not included.
2. Tested outdoor/indoor combinations have been tested in accordance with DOE test procedures for central air conditioners. Ratings for other combinations are determined under DOE computer simulation procedures.
3. Determine actual CFM values obtainable for your system by referring to fan performance data in fan coil or furnace coil literature.
4. Do not apply with capillary tube coils as performance and reliability are affected.

DETAILED COOLING CAPACITIES#

EVAPORATOR AIR		CONDENSER ENTERING AIR TEMPERATURES °F (°C)																	
		75 (23.9)			85 (29.4)			95 (35)			105 (40.6)			115 (46.1)			125 (51.7)		
CFM	EWB °F (°C)	Capacity MBtuh†		Total System KW**	Capacity MBtuh†		Total System KW**	Capacity MBtuh†		Total System KW**	Capacity MBtuh†		Total System KW**	Capacity MBtuh†		Total System KW**	Capacity MBtuh†		Total System KW**
		Total	Sens‡		Total	Sens‡		Total	Sens‡		Total	Sens‡		Total	Sens‡		Total	Sens‡	
24ABC618A**31 Outdoor Section With CNPV*1917A** Indoor Section																			
525	72 (22.2)	21.52	10.39	1.18	20.55	10.05	1.32	19.48	9.68	1.48	18.35	9.29	1.65	17.15	8.88	1.84	15.88	8.46	2.06
	67 (19.4)	19.59	12.69	1.18	18.66	12.32	1.32	17.68	11.95	1.47	16.64	11.56	1.64	15.54	11.14	1.83	14.37	10.72	2.05
	63 (17.2)††	18.14	12.20	1.18	17.28	11.84	1.32	16.37	11.47	1.47	15.40	11.07	1.63	14.37	10.66	1.82	13.27	10.22	2.04
	62 (16.7)	17.80	14.92	1.18	16.97	14.56	1.31	16.08	14.18	1.47	15.17	13.78	1.63	14.30	14.30	1.82	13.42	13.42	2.04
	57 (13.9)	17.19	17.19	1.18	16.54	16.54	1.31	15.84	15.84	1.46	15.09	15.09	1.63	14.27	14.27	1.82	13.40	13.40	2.04
600	72 (22.2)	21.94	10.93	1.21	20.92	10.58	1.35	19.82	10.21	1.51	18.63	9.81	1.68	17.39	9.40	1.87	16.07	8.97	2.09
	67 (19.4)	19.99	13.55	1.20	19.03	13.19	1.35	18.00	12.80	1.50	16.92	12.40	1.67	15.78	11.98	1.86	14.57	11.54	2.08
	63 (17.2)††	18.55	13.02	1.20	17.64	12.65	1.34	16.68	12.26	1.49	15.68	11.86	1.66	14.60	11.44	1.85	13.47	10.99	2.07
	62 (16.7)	18.25	16.11	1.20	17.39	15.72	1.34	16.55	16.55	1.49	15.74	15.74	1.66	14.87	14.87	1.85	13.93	13.93	2.07
	57 (13.9)	17.99	17.99	1.20	17.28	17.28	1.34	16.53	16.53	1.49	15.72	15.72	1.66	14.85	14.85	1.85	13.91	13.91	2.07
675	72 (22.2)	22.24	11.45	1.23	21.19	11.09	1.38	20.06	10.72	1.54	18.83	10.32	1.71	17.55	9.90	1.90	16.20	9.47	2.12
	67 (19.4)	20.29	14.38	1.23	19.30	14.01	1.37	18.24	13.62	1.53	17.13	13.22	1.70	15.95	12.79	1.89	14.72	12.34	2.10
	63 (17.2)††	18.85	13.79	1.23	17.91	13.42	1.37	16.92	13.03	1.52	15.88	12.61	1.69	14.78	12.18	1.88	13.63	11.73	2.10
	62 (16.7)	18.68	18.68	1.23	17.93	17.93	1.37	17.12	17.12	1.52	16.26	16.26	1.69	15.33	15.33	1.88	14.35	14.35	2.10
	57 (13.9)	18.66	18.66	1.23	17.90	17.90	1.37	17.09	17.09	1.52	16.24	16.24	1.69	15.31	15.31	1.88	14.33	14.33	2.10

COOLING INDOOR MODEL	CAPACITY	POWER	FURNACE MODEL
*CNPV*1917A**	1.00	1.00	
CAP**1814A**	1.00	1.04	
CAP**2414A**	1.00	1.04	
CAP**2417A**	1.00	1.04	
CAP**3014A**	1.00	1.00	
CAP**3017A**	1.00	1.00	
CAP**3614A**	1.00	1.00	
CAP**3617A**	1.00	1.00	
CAP**3619A**	1.00	1.00	
CAP**3621A**	1.00	1.00	
CNPF*2418A**	1.00	1.04	
CNPH*2417A**	1.00	1.00	
CNPV*1814A**	1.00	1.04	
CNPV*2414A**	1.00	1.04	
CNPV*2417A**	1.00	1.04	
CSPH*2412A**	1.00	1.00	
FB4CNF018	1.00	0.92	
FB4CNF018	1.00	0.96	
FB4CNF024	1.00	0.92	
FB4CNF024	1.00	0.96	
FE4ANF002	1.00	0.92	
FF1ENP018	1.00	1.04	
FF1ENP019	1.00	0.96	
FF1ENP024	1.00	1.04	
FF1ENP025	1.00	0.92	
FV4BNF002	1.06	0.96	
FV4CNF002	1.00	0.92	
FX4CNF018	1.05	0.99	
FX4CNF024	1.06	0.98	
FX4DNF019	1.00	0.92	
FX4DNF025	1.00	0.92	
FY4ANF018	1.03	1.08	
FY4ANF024	1.04	1.08	
FY5BNF018	1.00	1.00	
FY5BNF018	1.00	1.00	
FY5BNF024	1.00	1.00	
FY5BNF024	1.00	1.00	

COOLING INDOOR MODEL	CAPACITY	POWER	FURNACE MODEL
CAP**1814A**	1.00	0.96	58CV(A,X)070–12
CAP**2414A**	1.00	0.92	58CV(A,X)070–12
CAP**2417A**	1.00	0.92	58CV(A,X)070–12
CAP**3014A**	1.00	0.92	58CV(A,X)070–12
CAP**3614A**	1.00	0.92	58CV(A,X)070–12
CNPH*2417A**	1.00	0.92	58CV(A,X)070–12
CNPV*1814A**	1.00	0.92	58CV(A,X)070–12
CNPV*1917A**	1.00	0.92	58CV(A,X)070–12
CNPV*2414A**	1.00	0.92	58CV(A,X)070–12
CNPV*2417A**	1.00	0.92	58CV(A,X)070–12
CSPH*2412A**	1.00	0.92	58CV(A,X)070–12
CAP**2417A**	1.00	0.92	58CV(A,X)090–16
CAP**3017A**	1.00	0.92	58CV(A,X)090–16
CAP**3617A**	1.00	0.92	58CV(A,X)090–16
CNPH*2417A**	1.00	0.92	58CV(A,X)090–16
CNPV*1917A**	1.00	0.92	58CV(A,X)090–16
CNPV*2417A**	1.00	0.92	58CV(A,X)090–16
CSPH*2412A**	1.00	0.92	58CV(A,X)090–16
CNPH*2417A**	1.02	0.94	58HDV040––12
CNPV*1917A**	1.03	0.95	58HDV040––12
CNPV*2417A**	1.02	0.94	58HDV040––12
CSPH*2412A**	1.00	0.92	58HDV040––12
CNPH*2417A**	1.02	0.94	58HDV060––12
CNPV*2417A**	1.00	0.92	58HDV060––12
CSPH*2412A**	1.00	0.92	58HDV060––12
CAP**2417A**	1.00	0.92	58ME(B,C)060–12
CAP**3017A**	1.00	0.92	58ME(B,C)060–12
CAP**3617A**	1.00	0.92	58ME(B,C)060–12
CNPH*2417A**	1.00	0.92	58ME(B,C)060–12
CNPV*1917A**	1.00	0.92	58ME(B,C)060–12
CNPV*2417A**	1.00	0.92	58ME(B,C)060–12
CSPH*2412A**	1.00	0.92	58ME(B,C)060–12
CAP**2417A**	1.00	0.92	58MEB040–12
CAP**3017A**	1.00	0.92	58MEB040–12
CAP**3617A**	1.00	0.92	58MEB040–12
CNPH*2417A**	1.00	0.92	58MEB040–12
CNPV*1917A**	1.00	0.92	58MEB040–12

COOLING INDOOR MODEL	CAPACITY	POWER	FURNACE MODEL
CNPV*2417A**	1.00	0.92	58MEB040–12
CSPH*2412A**	1.00	0.92	58MEB040–12
CAP**2417A**	1.00	0.92	58MV(B,C)060–14
CAP**3017A**	1.00	0.92	58MV(B,C)060–14
CAP**3617A**	1.00	0.92	58MV(B,C)060–14
CNPH*2417A**	1.00	0.92	58MV(B,C)060–14
CNPV*1917A**	1.00	0.92	58MV(B,C)060–14
CNPV*2417A**	1.00	0.92	58MV(B,C)060–14
CSPH*2412A**	1.00	0.92	58MV(B,C)060–14
CAP**3621A**	1.00	0.92	58MV(B,C)080–14
CNPH*2417A**	1.00	0.92	58MV(B,C)080–14
CSPH*2412A**	1.00	0.92	58MV(B,C)080–14
CNPH*2417A**	1.00	0.92	58MVB040–14
CSPH*2412A**	1.00	0.92	58MVB040–14
CAP**1814A**	1.00	0.92	58PH*045–08
CAP**2414A**	1.00	0.92	58PH*045–08
CAP**2417A**	1.00	0.92	58PH*045–08
CAP**3014A**	1.00	0.92	58PH*045–08
CAP**3614A**	1.00	0.92	58PH*045–08
CNPH*2417A**	1.00	0.92	58PH*045–08
CNPV*1814A**	1.00	0.92	58PH*045–08
CNPV*1917A**	1.00	0.92	58PH*045–08
CNPV*2414A**	1.00	0.92	58PH*045–08
CNPV*2417A**	1.00	0.92	58PH*045–08
CSPH*2412A**	1.00	0.92	58PH*045–08
CAP**2417A**	1.00	0.92	58UVB060–14
CAP**3017A**	1.04	0.94	58UVB060–14
CAP**3617A**	1.04	0.94	58UVB060–14
CNPV*1917A**	1.00	0.92	58UVB060–14
CNPV*2417A**	1.00	0.92	58UVB060–14
CAP**3621A**	1.00	0.92	58UVB080–14
CAP**2417A**	1.00	0.92	58VLR105–12
CAP**3017A**	1.00	0.92	58VLR105–12
CAP**3617A**	1.00	0.92	58VLR105–12
CNPH*2417A**	1.00	0.92	58VLR105–12
CNPV*1917A**	1.00	0.92	58VLR105–12
CNPV*2417A**	1.00	0.92	58VLR105–12

DETAILED COOLING CAPACITIES# (CONT.)

24ABC618A31 Outdoor Section With CNPV*1917A** Indoor Section**

COOLING INDOOR MODEL	CAPACITY	POWER	FURNACE MODEL
CSPH*2412A**	1.00	0.92	58VLR105–12
CAP**2417A**	1.00	0.92	58VMR105–12
CAP**3017A**	1.00	0.92	58VMR105–12
CAP**3617A**	1.00	0.92	58VMR105–12
CNPH*2417A**	1.00	0.92	58VMR105–12
CNPV*1917A**	1.00	0.92	58VMR105–12
CNPV*2417A**	1.00	0.92	58VMR105–12
CSPH*2412A**	1.00	0.92	58VMR105–12
CAP**2417A**	1.00	0.92	59*N*A060V17**14
CNPH*2417A**	1.00	0.92	59*N*A060V17**14
CNPV*1917A**	1.00	0.92	59*N*A060V17**14
CNPV*2417A**	1.00	0.92	59*N*A060V17**14
CSPH*2412A**	1.00	0.92	59*N*A060V17**14
CAP**2417A**	1.00	0.92	59*N*A080V17**14
CNPH*2417A**	1.00	0.92	59*N*A080V17**14
CNPV*1917A**	1.00	0.92	59*N*A080V17**14
CNPV*2417A**	1.00	0.92	59*N*A080V17**14
CSPH*2412A**	1.00	0.92	59*N*A080V17**14
CAP**1814A**	1.00	0.94	59*P5A040E14**10
CAP**2414A**	1.00	0.94	59*P5A040E14**10
CAP**2417A**	1.00	0.94	59*P5A040E14**10
CNPH*2417A**	1.00	0.94	59*P5A040E14**10
CNPV*1814A**	1.00	0.94	59*P5A040E14**10
CNPV*1917A**	1.00	0.92	59*P5A040E14**10
CNPV*2414A**	1.00	0.94	59*P5A040E14**10
CNPV*2417A**	1.00	0.94	59*P5A040E14**10
CSPH*2412A**	1.00	0.94	59*P5A040E14**10
CAP**2417A**	1.00	0.92	OVLAAB036098
CNPH*2417A**	1.02	0.94	OVLAAB036098
CNPV*1917A**	1.02	0.94	OVLAAB036098
CNPV*2417A**	1.02	0.94	OVLAAB036098
CSPH*2412A**	1.02	0.94	OVLAAB036098
CAP**2417A**	1.00	0.92	OVMAAB036098
CNPH*2417A**	1.02	0.94	OVMAAB036098
CNPV*1917A**	1.02	0.94	OVMAAB036098
CNPV*2417A**	1.02	0.94	OVMAAB036098
CSPH*2412A**	1.02	0.94	OVMAAB036098

See notes on pg. 78

DETAILED COOLING CAPACITIES# (CONT.)

EVAPORATOR AIR		CONDENSER ENTERING AIR TEMPERATURES °F (°C)																	
		75 (23.9)			85 (29.4)			95 (35)			105 (40.6)			115 (46.1)			125 (51.7)		
CFM	EWB °F (°C)	Capacity MBtuh†		Total System KW**	Capacity MBtuh†		Total System KW**	Capacity MBtuh†		Total System KW**	Capacity MBtuh†		Total System KW**	Capacity MBtuh†		Total System KW**	Capacity MBtuh†		Total System KW**
		Total	Sens‡		Total	Sens‡		Total	Sens‡		Total	Sens‡		Total	Sens‡		Total	Sens‡	
24ABC624A**30 Outdoor Section With CNPV*3117A** Indoor Section																			
700	72 (22.2)	28.21	13.70	1.55	26.92	13.25	1.74	25.54	12.78	1.94	24.09	12.29	2.16	22.56	11.77	2.41	20.94	11.24	2.68
	67 (19.4)	25.63	16.78	1.55	24.44	16.32	1.73	23.19	15.85	1.93	21.87	15.36	2.15	20.47	14.84	2.39	18.98	14.29	2.67
	63 (17.2)††	23.72	16.13	1.55	22.62	15.67	1.73	21.46	15.20	1.92	20.22	14.70	2.14	18.91	14.18	2.38	17.52	13.62	2.67
	62 (16.7)	23.32	19.80	1.55	22.25	19.34	1.73	21.14	18.86	1.92	20.00	19.96	2.14	18.95	18.95	2.38	17.82	17.82	2.67
	57 (13.9)	22.68	22.68	1.55	21.84	21.84	1.73	20.93	20.93	1.92	19.96	19.96	2.14	18.92	18.92	2.38	17.79	17.79	2.67
800	72 (22.2)	28.72	14.43	1.58	27.38	13.97	1.77	25.95	13.49	1.98	24.44	12.99	2.20	22.85	12.47	2.44	21.17	11.93	2.72
	67 (19.4)	26.16	17.95	1.58	24.91	17.49	1.77	23.60	17.00	1.97	22.22	16.49	2.19	20.76	15.96	2.43	19.23	15.41	2.71
	63 (17.2)††	24.23	17.22	1.58	23.08	16.75	1.77	21.86	16.27	1.96	20.58	15.76	2.18	19.21	15.22	2.42	17.78	14.66	2.70
	62 (16.7)	23.91	21.38	1.58	22.85	22.74	1.77	21.85	21.85	1.96	20.81	20.81	2.18	19.69	19.69	2.42	18.49	18.49	2.71
	57 (13.9)	23.70	23.70	1.58	22.79	22.79	1.76	21.82	21.82	1.96	20.78	20.78	2.18	19.66	19.66	2.43	18.46	18.46	2.71
900	72 (22.2)	29.09	15.12	1.62	27.72	14.67	1.81	26.23	14.18	2.02	24.68	13.67	2.24	23.05	13.15	2.48	21.32	12.60	2.76
	67 (19.4)	26.54	19.08	1.62	25.25	18.60	1.81	23.90	18.11	2.01	22.48	17.59	2.22	20.98	17.05	2.47	19.42	16.48	2.75
	63 (17.2)††	24.61	18.27	1.62	23.42	17.79	1.80	22.16	17.30	2.00	20.84	16.78	2.22	19.45	16.23	2.46	17.98	15.65	2.74
	62 (16.7)	24.60	24.60	1.62	23.62	23.62	1.80	22.58	22.58	2.00	21.48	21.48	2.22	20.29	20.29	2.47	19.02	19.02	2.75
	57 (13.9)	24.56	24.56	1.62	23.59	23.59	1.80	22.55	22.55	2.00	21.45	21.45	2.22	20.27	20.27	2.47	18.99	18.99	2.75

COOLING INDOOR MODEL	CAPACITY	POWER	FURNACE MODEL
*CNPV*3117A**	1.00	1.00	
CAP**2414A**	0.97	1.02	
CAP**2417A**	0.97	1.02	
CAP**3014A**	0.98	1.03	
CAP**3017A**	0.98	1.03	
CAP**3614A**	0.98	1.03	
CAP**3617A**	0.98	1.03	
CAP**3619A**	0.98	1.03	
CAP**3621A**	0.98	1.03	
CAP**4221A**	1.02	1.02	
CAP**4224A**	1.02	1.02	
CNPF*2418A**	0.97	1.02	
CNPF*3618A**	0.98	1.03	
CNPH*2417A**	0.97	1.02	
CNPH*3017A**	0.98	1.03	
CNPH*3117A**	1.00	1.00	
CNPH*3617A**	0.98	1.03	
CNPV*1917A**	0.98	1.03	
CNPV*2414A**	0.97	1.02	
CNPV*2417A**	0.97	1.02	
CNPV*3014A**	0.98	1.03	
CNPV*3017A**	0.98	1.03	
CNPV*3617A**	0.98	1.03	
CNPV*3621A**	0.98	1.03	
CSPH*2412A**	0.98	1.03	
CSPH*3012A**	0.98	1.03	
CSPH*3612A**	1.00	1.00	
FB4CNF024	0.97	0.97	
FB4CNF024	0.97	0.97	
FB4CNF030	0.99	0.92	
FB4CNF030	0.99	0.95	
FE4AN(B,F)003	0.98	0.91	
FE4ANF002	0.98	0.91	
FF1ENP024	0.97	1.01	
FF1ENP025	0.98	0.94	
FF1ENP030	0.97	1.01	
FF1ENP031	0.98	0.94	

COOLING INDOOR MODEL	CAPACITY	POWER	FURNACE MODEL
FF1ENP036	0.97	1.06	
FF1ENP037	0.99	0.95	
FV4BN(B,F)003	1.03	0.91	
FV4BNF002	1.03	0.92	
FV4CN(B,F)003	0.98	0.91	
FV4CNF002	0.98	0.91	
FX4CN(B,F)036	1.03	1.02	
FX4CNF024	1.03	0.95	
FX4CNF030	1.04	0.95	
FX4DN(B,F)031	1.00	0.96	
FX4DNF025	0.99	0.92	
FY4ANF024	1.02	1.02	
FY4ANF030	1.03	1.01	
FY4ANF036	1.03	1.05	
FY5BNF024	0.98	0.98	
FY5BNF024	0.98	0.98	
FY5BNF030	0.99	0.99	
FY5BNF030	0.99	0.99	
CAP**2414A**	0.97	0.93	58CV(A,X)070–12
CAP**2417A**	0.97	0.93	58CV(A,X)070–12
CAP**3014A**	0.97	0.89	58CV(A,X)070–12
CAP**3017A**	0.97	0.90	58CV(A,X)070–12
CAP**3614A**	0.97	0.90	58CV(A,X)070–12
CAP**3617A**	0.97	0.90	58CV(A,X)070–12
CNPH*2417A**	0.97	0.93	58CV(A,X)070–12
CNPH*3017A**	0.97	0.90	58CV(A,X)070–12
CNPH*3117A**	0.99	0.92	58CV(A,X)070–12
CNPH*3617A**	0.97	0.90	58CV(A,X)070–12
CNPV*1917A**	0.97	0.90	58CV(A,X)070–12
CNPV*2414A**	0.97	0.93	58CV(A,X)070–12
CNPV*2417A**	0.97	0.93	58CV(A,X)070–12
CNPV*3014A**	0.97	0.90	58CV(A,X)070–12
CNPV*3017A**	0.97	0.90	58CV(A,X)070–12
CNPV*3117A**	0.99	0.92	58CV(A,X)070–12
CNPV*3617A**	0.97	0.90	58CV(A,X)070–12
CSPH*3012A**	0.97	0.90	58CV(A,X)070–12
CSPH*3612A**	0.99	0.92	58CV(A,X)070–12

COOLING INDOOR MODEL	CAPACITY	POWER	FURNACE MODEL
CAP**2417A**	0.97	0.89	58CV(A,X)090–16
CAP**3017A**	0.97	0.90	58CV(A,X)090–16
CAP**3617A**	0.97	0.90	58CV(A,X)090–16
CAP**3621A**	0.97	0.90	58CV(A,X)090–16
CNPH*2417A**	0.97	0.89	58CV(A,X)090–16
CNPH*3017A**	0.97	0.90	58CV(A,X)090–16
CNPH*3117A**	0.99	0.92	58CV(A,X)090–16
CNPH*3617A**	0.97	0.90	58CV(A,X)090–16
CNPV*1917A**	0.97	0.90	58CV(A,X)090–16
CNPV*2417A**	0.97	0.89	58CV(A,X)090–16
CNPV*3017A**	0.97	0.90	58CV(A,X)090–16
CNPV*3117A**	0.99	0.92	58CV(A,X)090–16
CNPV*3617A**	0.97	0.90	58CV(A,X)090–16
CNPV*3621A**	0.97	0.90	58CV(A,X)090–16
CSPH*3012A**	0.98	0.91	58CV(A,X)090–16
CSPH*3612A**	0.99	0.92	58CV(A,X)090–16
CAP**3621A**	0.98	0.91	58CV(A,X)110–20
CAP**4221A**	1.02	0.94	58CV(A,X)110–20
CNPH*2417A**	0.97	0.93	58CV(A,X)110–20
CNPH*3017A**	0.97	0.90	58CV(A,X)110–20
CNPH*3117A**	0.99	0.92	58CV(A,X)110–20
CNPH*3617A**	0.97	0.90	58CV(A,X)110–20
CNPV*3621A**	0.97	0.90	58CV(A,X)110–20
CSPH*3012A**	0.98	0.91	58CV(A,X)110–20
CSPH*3612A**	0.99	0.92	58CV(A,X)110–20
CAP**4224A**	1.02	0.94	58CV(A,X)135–22
CNPH*2417A**	0.97	0.93	58CV(A,X)135–22
CNPH*3017A**	0.97	0.90	58CV(A,X)135–22
CNPH*3117A**	0.99	0.92	58CV(A,X)135–22
CNPH*3617A**	0.97	0.90	58CV(A,X)135–22
CSPH*3012A**	0.98	0.91	58CV(A,X)135–22
CSPH*3612A**	0.99	0.92	58CV(A,X)135–22
CAP**4224A**	1.02	0.94	58CV(A,X)155–22
CNPH*2417A**	0.97	0.93	58CV(A,X)155–22
CNPH*3017A**	0.97	0.90	58CV(A,X)155–22
CNPH*3117A**	0.99	0.92	58CV(A,X)155–22
CNPH*3617A**	0.97	0.90	58CV(A,X)155–22

DETAILED COOLING CAPACITIES# (CONT.)

24ABC624A30 Outdoor Section With CNPV*3117A** Indoor Section**

COOLING INDOOR MODEL	CAPACITY	POWER	FURNACE MODEL
CSPH*3012A**	0.98	0.91	58CV(A,X)155–22
CSPH*3612A**	0.99	0.92	58CV(A,X)155–22
CAP**3619A**	0.99	0.95	58HDV040––12
CNPH*2417A**	0.99	0.95	58HDV040––12
CNPH*3017A**	1.00	0.96	58HDV040––12
CNPH*3117A**	1.00	0.92	58HDV040––12
CNPV*2417A**	0.99	0.95	58HDV040––12
CNPV*3017A**	1.00	0.96	58HDV040––12
CNPV*3117A**	1.02	0.94	58HDV040––12
CSPH*2412A**	0.98	0.92	58HDV040––12
CAP**3619A**	1.00	0.96	58HDV060––12
CNPH*2417A**	0.99	0.95	58HDV060––12
CNPH*3017A**	1.00	0.96	58HDV060––12
CNPH*3117A**	1.00	0.92	58HDV060––12
CNPV*3017A**	1.02	0.98	58HDV060––12
CNPV*3117A**	1.02	0.94	58HDV060––12
CSPH*2412A**	0.98	0.92	58HDV060––12
CNPH*2417A**	0.99	0.95	58HDV080––20
CNPH*3017A**	1.00	0.92	58HDV080––20
CNPH*3117A**	1.00	0.92	58HDV080––20
CNPH*2417A**	0.99	0.95	58HDV100––20
CNPH*3017A**	1.00	0.92	58HDV100––20
CNPH*3117A**	1.00	0.92	58HDV100––20
CAP**2417A**	0.99	0.92	58ME(B,C)060–12
CAP**3017A**	1.00	0.92	58ME(B,C)060–12
CAP**3617A**	1.01	0.93	58ME(B,C)060–12
CAP**3621A**	1.01	0.93	58ME(B,C)060–12
CNPH*2417A**	0.98	0.91	58ME(B,C)060–12
CNPH*3017A**	1.00	0.92	58ME(B,C)060–12
CNPH*3117A**	1.02	0.94	58ME(B,C)060–12
CNPH*3617A**	1.00	0.92	58ME(B,C)060–12
CNPV*1917A**	1.00	0.92	58ME(B,C)060–12
CNPV*2417A**	0.98	0.91	58ME(B,C)060–12
CNPV*3017A**	1.00	0.92	58ME(B,C)060–12
CNPV*3117A**	1.02	0.94	58ME(B,C)060–12
CNPV*3617A**	1.00	0.92	58ME(B,C)060–12
CNPV*3621A**	1.00	0.92	58ME(B,C)060–12
CSPH*3012A**	1.00	0.92	58ME(B,C)060–12
CSPH*3612A**	1.02	0.94	58ME(B,C)060–12
CAP**2417A**	0.98	0.91	58ME(B,C)080–12
CAP**3017A**	0.99	0.92	58ME(B,C)080–12
CAP**3617A**	1.00	0.92	58ME(B,C)080–12
CAP**3621A**	1.00	0.92	58ME(B,C)080–12
CNPH*2417A**	0.97	0.90	58ME(B,C)080–12
CNPH*3017A**	0.99	0.92	58ME(B,C)080–12
CNPH*3117A**	1.02	0.94	58ME(B,C)080–12
CNPH*3617A**	0.99	0.92	58ME(B,C)080–12
CNPV*2417A**	0.97	0.90	58ME(B,C)080–12
CNPV*3017A**	0.99	0.92	58ME(B,C)080–12
CNPV*3117A**	1.02	0.94	58ME(B,C)080–12
CNPV*3617A**	0.99	0.92	58ME(B,C)080–12
CNPV*3621A**	0.99	0.92	58ME(B,C)080–12
CSPH*3012A**	0.99	0.92	58ME(B,C)080–12
CSPH*3612A**	1.01	0.93	58ME(B,C)080–12
CAP**2417A**	0.99	0.92	58MEB040–12
CAP**3017A**	1.00	0.92	58MEB040–12
CAP**3617A**	1.00	0.92	58MEB040–12
CAP**3621A**	1.01	0.93	58MEB040–12

COOLING INDOOR MODEL	CAPACITY	POWER	FURNACE MODEL
CNPH*2417A**	0.98	0.91	58MEB040–12
CNPH*3017A**	1.00	0.92	58MEB040–12
CNPH*3117A**	1.02	0.94	58MEB040–12
CNPH*3617A**	1.00	0.92	58MEB040–12
CNPV*1917A**	1.00	0.92	58MEB040–12
CNPV*2417A**	0.98	0.91	58MEB040–12
CNPV*3017A**	1.00	0.92	58MEB040–12
CNPV*3117A**	1.02	0.94	58MEB040–12
CNPV*3617A**	1.00	0.92	58MEB040–12
CNPV*3621A**	1.00	0.92	58MEB040–12
CSPH*3012A**	1.00	0.92	58MEB040–12
CSPH*3612A**	1.02	0.94	58MEB040–12
CAP**2417A**	0.98	0.91	58MV(B,C)060–14
CAP**3017A**	0.98	0.91	58MV(B,C)060–14
CAP**3617A**	0.99	0.92	58MV(B,C)060–14
CAP**3621A**	0.99	0.92	58MV(B,C)060–14
CNPH*2417A**	0.97	0.94	58MV(B,C)060–14
CNPH*3017A**	0.98	0.91	58MV(B,C)060–14
CNPH*3117A**	1.01	0.93	58MV(B,C)060–14
CNPH*3617A**	0.98	0.91	58MV(B,C)060–14
CNPV*1917A**	0.99	0.92	58MV(B,C)060–14
CNPV*2417A**	0.97	0.94	58MV(B,C)060–14
CNPV*3017A**	0.98	0.91	58MV(B,C)060–14
CNPV*3117A**	1.01	0.93	58MV(B,C)060–14
CNPV*3617A**	0.98	0.91	58MV(B,C)060–14
CNPV*3621A**	0.98	0.91	58MV(B,C)060–14
CSPH*3012A**	0.99	0.92	58MV(B,C)060–14
CSPH*3612A**	1.01	0.93	58MV(B,C)060–14
CAP**3621A**	0.97	0.90	58MV(B,C)080–14
CAP**4221A**	1.02	0.94	58MV(B,C)080–14
CNPH*2417A**	0.97	0.93	58MV(B,C)080–14
CNPH*3017A**	0.97	0.90	58MV(B,C)080–14
CNPH*3117A**	0.99	0.92	58MV(B,C)080–14
CNPH*3617A**	0.97	0.90	58MV(B,C)080–14
CNPV*3621A**	0.97	0.90	58MV(B,C)080–14
CSPH*3012A**	0.97	0.90	58MV(B,C)080–14
CSPH*3612A**	0.99	0.92	58MV(B,C)080–14
CAP**3621A**	0.97	0.89	58MV(B,C)080–20
CAP**4221A**	1.02	0.94	58MV(B,C)080–20
CNPH*2417A**	0.96	0.92	58MV(B,C)080–20
CNPH*3017A**	0.97	0.89	58MV(B,C)080–20
CNPH*3117A**	0.98	0.91	58MV(B,C)080–20
CNPH*3617A**	0.97	0.89	58MV(B,C)080–20
CNPV*3621A**	0.97	0.89	58MV(B,C)080–20
CSPH*3012A**	0.97	0.89	58MV(B,C)080–20
CSPH*3612A**	0.98	0.91	58MV(B,C)080–20
CAP**3621A**	0.97	0.90	58MV(B,C)100–20
CAP**4221A**	1.02	0.94	58MV(B,C)100–20
CNPH*2417A**	0.97	0.93	58MV(B,C)100–20
CNPH*3017A**	0.97	0.90	58MV(B,C)100–20
CNPH*3117A**	0.99	0.92	58MV(B,C)100–20
CNPH*3617A**	0.97	0.90	58MV(B,C)100–20
CNPV*3621A**	0.97	0.90	58MV(B,C)100–20
CSPH*3012A**	0.97	0.90	58MV(B,C)100–20
CSPH*3612A**	0.99	0.92	58MV(B,C)100–20
CAP**4224A**	1.02	0.94	58MV(B,C)120–20
CNPH*2417A**	0.97	0.90	58MV(B,C)120–20
CNPH*3017A**	0.98	0.91	58MV(B,C)120–20

COOLING INDOOR MODEL	CAPACITY	POWER	FURNACE MODEL
CNPH*3117A**	1.00	0.92	58MV(B,C)120–20
CNPH*3617A**	0.98	0.91	58MV(B,C)120–20
CSPH*3012A**	0.98	0.91	58MV(B,C)120–20
CSPH*3612A**	1.00	0.92	58MV(B,C)120–20
CAP**4224A**	1.02	0.94	58MVB040–14
CNPH*2417A**	0.97	0.93	58MVB040–14
CNPH*3017A**	0.97	0.90	58MVB040–14
CNPH*3117A**	0.99	0.92	58MVB040–14
CNPH*3617A**	0.97	0.90	58MVB040–14
CSPH*3012A**	0.97	0.90	58MVB040–14
CSPH*3612A**	0.99	0.92	58MVB040–14
CAP**2414A**	0.97	0.94	58PH*045–08
CAP**2417A**	0.97	0.94	58PH*045–08
CAP**3014A**	0.98	0.94	58PH*045–08
CAP**3017A**	0.98	0.91	58PH*045–08
CAP**3614A**	0.98	0.91	58PH*045–08
CAP**3617A**	0.99	0.92	58PH*045–08
CNPH*2417A**	0.97	0.94	58PH*045–08
CNPH*3017A**	0.98	0.91	58PH*045–08
CNPH*3117A**	1.01	0.93	58PH*045–08
CNPH*3617A**	0.98	0.91	58PH*045–08
CNPV*1917A**	0.98	0.91	58PH*045–08
CNPV*2414A**	0.97	0.94	58PH*045–08
CNPV*2417A**	0.97	0.94	58PH*045–08
CNPV*3014A**	0.98	0.94	58PH*045–08
CNPV*3017A**	0.98	0.91	58PH*045–08
CNPV*3117A**	1.01	0.93	58PH*045–08
CNPV*3617A**	0.98	0.91	58PH*045–08
CSPH*3012A**	0.98	0.91	58PH*045–08
CSPH*3612A**	1.00	0.92	58PH*045–08
CAP**2417A**	0.98	0.91	58UVB060–14
CAP**2417A**	0.98	0.91	58UVB060–14
CAP**3017A**	0.98	0.91	58UVB060–14
CAP**3017A**	0.98	0.91	58UVB060–14
CAP**3617A**	0.99	0.92	58UVB060–14
CAP**3617A**	0.99	0.92	58UVB060–14
CAP**3621A**	0.99	0.92	58UVB060–14
CAP**3621A**	0.99	0.92	58UVB060–14
CNPV*1917A**	0.99	0.92	58UVB060–14
CNPV*1917A**	0.99	0.92	58UVB060–14
CNPV*2417A**	0.97	0.94	58UVB060–14
CNPV*2417A**	0.97	0.94	58UVB060–14
CNPV*3017A**	0.98	0.91	58UVB060–14
CNPV*3017A**	0.98	0.91	58UVB060–14
CNPV*3117A**	1.01	0.93	58UVB060–14
CNPV*3117A**	1.01	0.93	58UVB060–14
CNPV*3617A**	0.98	0.91	58UVB060–14
CNPV*3617A**	0.98	0.91	58UVB060–14
CNPV*3621A**	0.98	0.91	58UVB060–14
CNPV*3621A**	0.98	0.91	58UVB060–14
CAP**3621A**	0.97	0.90	58UVB080–14
CAP**3621A**	0.97	0.90	58UVB080–14
CAP**4221A**	1.02	0.94	58UVB080–14
CAP**4221A**	1.02	0.94	58UVB080–14
CNPV*3621A**	0.97	0.90	58UVB080–14
CNPV*3621A**	0.97	0.90	58UVB080–14
CAP**3621A**	0.97	0.89	58UVB080–20
CAP**3621A**	0.97	0.89	58UVB080–20

DETAILED COOLING CAPACITIES# (CONT.)

24ABC624A30 Outdoor Section With CNPV*3117A** Indoor Section**

COOLING INDOOR MODEL	CAPACITY	POWER	FURNACE MODEL
CAP**4221A**	1.02	0.94	58UVB080–20
CAP**4221A**	1.02	0.94	58UVB080–20
CNPV*3621A**	0.97	0.89	58UVB080–20
CNPV*3621A**	0.97	0.89	58UVB080–20
CAP**3621A**	0.97	0.90	58UVB100–20
CAP**3621A**	0.97	0.90	58UVB100–20
CAP**4221A**	1.02	0.94	58UVB100–20
CAP**4221A**	1.02	0.94	58UVB100–20
CNPV*3621A**	0.97	0.90	58UVB100–20
CNPV*3621A**	0.97	0.90	58UVB100–20
CAP**4224A**	1.02	0.94	58UVB120–20
CAP**4224A**	1.02	0.94	58UVB120–20
CAP**2417A**	1.02	0.94	58VLR105–12
CAP**3017A**	1.02	0.94	58VLR105–12
CAP**3617A**	1.02	0.94	58VLR105–12
CAP**3621A**	1.02	0.94	58VLR105–12
CNPH*2417A**	1.02	0.94	58VLR105–12
CNPH*3017A**	1.02	0.94	58VLR105–12
CNPH*3117A**	1.02	0.94	58VLR105–12
CNPH*3617A**	1.02	0.94	58VLR105–12
CNPV*2417A**	1.02	0.94	58VLR105–12
CNPV*3017A**	1.02	0.94	58VLR105–12
CNPV*3117A**	1.02	0.94	58VLR105–12
CNPV*3617A**	1.02	0.94	58VLR105–12
CNPV*3621A**	1.02	0.94	58VLR105–12
CSPH*2412A**	1.02	0.94	58VLR105–12
CSPH*3012A**	1.02	0.94	58VLR105–12
CSPH*3612A**	1.02	0.94	58VLR105–12
CAP**2417A**	1.01	0.93	58VMR105–12
CAP**3017A**	1.01	0.93	58VMR105–12
CAP**3617A**	1.02	0.94	58VMR105–12
CAP**3621A**	1.02	0.94	58VMR105–12
CNPH*2417A**	1.01	0.93	58VMR105–12
CNPH*3017A**	1.02	0.94	58VMR105–12
CNPH*3117A**	1.02	0.94	58VMR105–12
CNPH*3617A**	1.02	0.94	58VMR105–12
CNPV*2417A**	1.02	0.94	58VMR105–12
CNPV*3017A**	1.02	0.94	58VMR105–12
CNPV*3117A**	1.02	0.94	58VMR105–12
CNPV*3617A**	1.02	0.94	58VMR105–12
CNPV*3621A**	1.02	0.94	58VMR105–12
CSPH*2412A**	1.02	0.94	58VMR105–12
CSPH*3012A**	1.02	0.94	58VMR105–12
CSPH*3612A**	1.02	0.94	58VMR105–12
CAP**2417A**	1.02	0.96	59*N*A060V17**14
CAP**3017A**	1.02	0.94	59*N*A060V17**14
CNPH*2417A**	1.02	0.96	59*N*A060V17**14
CNPH*3017A**	1.02	0.94	59*N*A060V17**14
CNPH*3117A**	1.02	0.94	59*N*A060V17**14
CNPV*2417A**	1.02	0.96	59*N*A060V17**14
CNPV*3017A**	1.02	0.94	59*N*A060V17**14
CNPV*3117A**	1.02	0.94	59*N*A060V17**14
CSPH*2412A**	1.02	0.96	59*N*A060V17**14
CSPH*3012A**	1.02	0.94	59*N*A060V17**14
CAP**2417A**	1.01	0.93	59*N*A080V17**14
CAP**3017A**	1.02	0.94	59*N*A080V17**14
CNPH*2417A**	1.01	0.95	59*N*A080V17**14
CNPH*3017A**	1.02	0.94	59*N*A080V17**14
CNPH*3117A**	1.02	0.92	59*N*A080V17**14

COOLING INDOOR MODEL	CAPACITY	POWER	FURNACE MODEL
CNPV*2417A**	1.01	0.95	59*N*A080V17**14
CNPV*3017A**	1.02	0.94	59*N*A080V17**14
CNPV*3117A**	1.02	0.92	59*N*A080V17**14
CSPH*2412A**	1.02	0.94	59*N*A080V17**14
CSPH*3012A**	1.02	0.94	59*N*A080V17**14
CNPH*2417A**	1.02	0.94	59*N*A100V21**20
CNPH*3017A**	1.02	0.94	59*N*A100V21**20
CNPH*3117A**	1.02	0.92	59*N*A100V21**20
CSPH*2412A**	1.02	0.94	59*N*A100V21**20
CSPH*3012A**	1.02	0.94	59*N*A100V21**20
CNPH*2417A**	1.02	0.94	59*N*A120V24**22
CNPH*3017A**	1.02	0.94	59*N*A120V24**22
CNPH*3117A**	1.02	0.92	59*N*A120V24**22
CSPH*2412A**	1.02	0.94	59*N*A120V24**22
CSPH*3012A**	1.02	0.94	59*N*A120V24**22
CAP**2414A**	1.02	1.02	59*P5A040E14**10
CAP**2417A**	1.02	1.02	59*P5A040E14**10
CAP**3014A**	1.02	1.02	59*P5A040E14**10
CAP**3017A**	1.02	1.02	59*P5A040E14**10
CNPH*2417A**	1.02	1.02	59*P5A040E14**10
CNPH*3017A**	1.02	1.02	59*P5A040E14**10
CNPH*3117A**	1.02	0.98	59*P5A040E14**10
CNPV*2414A**	1.02	1.02	59*P5A040E14**10
CNPV*2417A**	1.02	1.02	59*P5A040E14**10
CNPV*3014A**	1.02	1.02	59*P5A040E14**10
CNPV*3017A**	1.02	1.02	59*P5A040E14**10
CNPV*3117A**	1.02	0.98	59*P5A040E14**10
CSPH*2412A**	1.02	1.02	59*P5A040E14**10
CSPH*3012A**	1.02	0.98	59*P5A040E14**10
CAP**2417A**	1.02	0.94	59*P5A060E17**14
CAP**3017A**	1.02	0.94	59*P5A060E17**14
CNPH*2417A**	1.02	0.96	59*P5A060E17**14
CNPH*3017A**	1.02	0.94	59*P5A060E17**14
CNPH*3117A**	1.02	0.92	59*P5A060E17**14
CNPV*2417A**	1.02	0.96	59*P5A060E17**14
CNPV*3017A**	1.02	0.94	59*P5A060E17**14
CNPV*3117A**	1.02	0.92	59*P5A060E17**14
CSPH*2412A**	1.02	0.94	59*P5A060E17**14
CSPH*3012A**	1.02	0.94	59*P5A060E17**14
CAP**2417A**	1.02	0.94	OVLAAB036098
CAP**3017A**	1.02	0.94	OVLAAB036098
CNPH*2417A**	0.99	0.95	OVLAAB036098
CNPH*3017A**	1.00	0.92	OVLAAB036098
CNPH*3117A**	1.02	0.94	OVLAAB036098
CNPV*2417A**	0.99	0.95	OVLAAB036098
CNPV*3017A**	1.00	0.92	OVLAAB036098
CNPV*3117A**	1.02	0.94	OVLAAB036098
CSPH*2412A**	1.00	0.92	OVLAAB036098
CSPH*3012A**	1.00	0.92	OVLAAB036098
CAP**2417A**	1.02	0.94	OVMAAB036098
CAP**3017A**	1.02	0.94	OVMAAB036098
CNPH*2417A**	0.99	0.95	OVMAAB036098
CNPH*3017A**	1.00	0.92	OVMAAB036098
CNPH*3117A**	1.02	0.94	OVMAAB036098
CNPV*2417A**	0.99	0.95	OVMAAB036098
CNPV*3017A**	1.00	0.92	OVMAAB036098
CNPV*3117A**	1.02	0.94	OVMAAB036098
CSPH*2412A**	1.00	0.96	OVMAAB036098
CSPH*3012A**	1.00	0.92	OVMAAB036098

COOLING INDOOR MODEL	CAPACITY	POWER	FURNACE MODEL
CNPH*2417A**	0.99	0.92	OVMAAB042112
CNPH*3017A**	1.00	0.92	OVMAAB042112
CNPH*3117A**	1.02	0.94	OVMAAB042112
CNPV*2417A**	0.99	0.92	OVMAAB042112
CNPV*3017A**	1.00	0.92	OVMAAB042112
CNPV*3117A**	1.02	0.94	OVMAAB042112
CSPH*2412A**	1.00	0.92	OVMAAB042112
CSPH*3012A**	1.00	0.92	OVMAAB042112

See notes on pg. 78

DETAILED COOLING CAPACITIES# (CONT.)

EVAPORATOR AIR		CONDENSER ENTERING AIR TEMPERATURES °F (°C)																	
		75 (23.9)			85 (29.4)			95 (35)			105 (40.6)			115 (46.1)			125 (51.7)		
CFM	EWB °F (°C)	Capacity MBtuh†		Total System KW**	Capacity MBtuh†		Total System KW**	Capacity MBtuh†		Total System KW**	Capacity MBtuh†		Total System KW**	Capacity MBtuh†		Total System KW**	Capacity MBtuh†		Total System KW**
		Total	Sens‡		Total	Sens‡		Total	Sens‡		Total	Sens‡		Total	Sens‡		Total	Sens‡	
24ABC630A**30 Outdoor Section With CNPV*3117A** Indoor Section																			
875	72 (22.2)	34.09	16.61	1.91	32.58	16.09	2.11	31.00	15.56	2.33	29.32	15.00	2.59	27.51	14.40	2.88	25.53	13.76	3.22
	67 (19.4)	30.99	20.47	1.92	29.61	19.95	2.12	28.16	19.41	2.34	26.61	18.84	2.59	24.93	18.23	2.88	23.10	17.56	3.22
	63 (17.2)††	28.76	19.68	1.93	27.47	19.16	2.12	26.11	18.61	2.34	24.65	18.03	2.59	23.07	17.41	2.88	21.33	16.73	3.22
	62 (16.7)	28.31	24.28	1.93	27.08	23.74	2.12	25.80	23.16	2.34	24.56	24.56	2.59	23.28	23.28	2.88	21.87	21.87	3.21
	57 (13.9)	27.76	27.76	1.93	26.76	26.76	2.12	25.69	25.69	2.34	24.52	24.52	2.59	23.25	23.25	2.88	21.83	21.83	3.21
1000	72 (22.2)	34.67	17.49	1.96	33.09	16.96	2.15	31.45	16.42	2.38	29.71	15.86	2.63	27.83	15.25	2.93	25.79	14.60	3.26
	67 (19.4)	31.55	21.88	1.97	30.10	21.35	2.16	28.60	20.80	2.38	27.00	20.22	2.64	25.27	19.60	2.93	23.39	18.92	3.26
	63 (17.2)††	29.30	20.99	1.97	27.95	20.46	2.17	26.55	19.90	2.39	25.04	19.31	2.64	23.40	18.68	2.93	21.63	17.98	3.26
	62 (16.7)	29.03	28.77	1.97	27.89	27.89	2.16	26.74	26.74	2.39	25.50	25.50	2.64	24.14	24.14	2.93	22.64	22.64	3.26
	57 (13.9)	28.93	28.93	1.97	27.84	27.84	2.16	26.70	26.70	2.39	25.46	25.46	2.64	24.11	24.11	2.93	22.61	22.61	3.26
1125	72 (22.2)	35.09	18.33	2.00	33.45	17.80	2.20	31.76	17.25	2.42	29.97	16.67	2.68	28.04	16.06	2.97	25.96	15.41	3.31
	67 (19.4)	31.96	23.24	2.01	30.47	22.70	2.21	28.93	22.14	2.43	27.29	21.54	2.68	25.52	20.90	2.97	23.62	20.20	3.31
	63 (17.2)††	29.70	22.25	2.02	28.32	21.71	2.21	26.87	21.14	2.43	25.32	20.53	2.69	23.66	19.88	2.98	21.87	19.15	3.31
	62 (16.7)	29.93	29.93	2.02	28.78	28.78	2.21	27.57	27.57	2.43	26.26	26.26	2.68	24.83	24.83	2.97	23.26	23.26	3.31
	57 (13.9)	29.89	29.89	2.02	28.74	28.74	2.21	27.53	27.53	2.43	26.22	26.22	2.68	24.80	24.80	2.97	23.23	23.23	3.31

COOLING INDOOR MODEL	CAPACITY	POWER	FURNACE MODEL
*CNPV*3117A**	1.00	1.00	
CAP**3014A**	0.98	0.98	
CAP**3017A**	0.98	0.98	
CAP**3614A**	0.98	0.98	
CAP**3617A**	0.98	0.98	
CAP**3619A**	0.98	1.02	
CAP**3621A**	0.98	0.98	
CAP**4221A**	0.99	1.03	
CAP**4224A**	0.99	1.03	
CAP**4817A**	1.01	1.01	
CAP**4821A**	1.01	1.01	
CAP**4823A**	1.01	1.01	
CAP**4824A**	1.01	1.01	
CNPF*3618A**	0.98	1.02	
CNPH*3017A**	0.98	0.98	
CNPH*3117A**	1.00	1.00	
CNPH*3617A**	0.98	0.98	
CNPH*4221A**	0.99	1.03	
CNPV*3014A**	0.98	0.98	
CNPV*3017A**	0.98	0.98	
CNPV*3617A**	0.98	0.98	
CNPV*3621A**	0.98	0.98	
CNPV*4217A**	0.99	1.04	
CNPV*4221A**	0.99	1.03	
CSPH*3012A**	0.99	1.03	
CSPH*3612A**	1.00	1.00	
CSPH*4212A**	1.00	1.00	
FB4CNF030	0.98	0.94	
FB4CNF030	0.98	0.94	
FB4CNF036	0.98	0.94	
FB4CNF036	0.98	0.94	
FE4AN(B,F)003	0.99	0.91	
FE4AN(B,F)005	1.01	0.93	
FE4ANF002	0.98	0.90	
FE5ANB004	1.01	0.94	
FF1ENP030	0.97	0.97	
FF1ENP031	0.99	0.95	

COOLING INDOOR MODEL	CAPACITY	POWER	FURNACE MODEL
FF1ENP036	0.98	0.98	
FF1ENP037	0.99	0.95	
FV4BN(B,F)003	1.00	0.91	
FV4BN(B,F)005	1.03	0.90	
FV4BNF002	1.00	0.92	
FV4CN(B,F)003	0.99	0.91	
FV4CN(B,F)005	1.01	0.93	
FV4CNF002	0.98	0.90	
FX4CN(B,F)036	1.01	0.95	
FX4CN(B,F)042	1.01	1.00	
FX4CNF030	1.01	0.95	
FX4DN(B,F)031	0.99	0.92	
FX4DN(B,F)037	1.01	0.93	
FY4ANF030	0.99	1.02	
FY4ANF036	1.00	1.03	
FY4ANF042	1.01	1.03	
FY5BNF030	0.99	0.95	
FY5BNF030	0.98	0.94	
FY5BNF036	0.99	0.99	
FY5BNF036	0.98	0.98	
CAP**3014A**	0.97	0.89	58CV(A,X)070–12
CAP**3017A**	0.97	0.93	58CV(A,X)070–12
CAP**3614A**	0.97	0.93	58CV(A,X)070–12
CAP**3617A**	0.97	0.93	58CV(A,X)070–12
CNPH*3017A**	0.97	0.93	58CV(A,X)070–12
CNPH*3117A**	0.99	0.92	58CV(A,X)070–12
CNPH*3617A**	0.97	0.93	58CV(A,X)070–12
CNPH*4221A**	0.98	0.90	58CV(A,X)070–12
CNPV*3014A**	0.97	0.93	58CV(A,X)070–12
CNPV*3017A**	0.97	0.93	58CV(A,X)070–12
CNPV*3117A**	0.99	0.92	58CV(A,X)070–12
CNPV*3617A**	0.97	0.93	58CV(A,X)070–12
CNPV*4217A**	0.99	0.91	58CV(A,X)070–12
CSPH*3012A**	0.97	0.93	58CV(A,X)070–12
CSPH*3612A**	0.99	0.91	58CV(A,X)070–12
CSPH*4212A**	0.99	0.92	58CV(A,X)070–12
CAP**3017A**	0.97	0.90	58CV(A,X)090–16

COOLING INDOOR MODEL	CAPACITY	POWER	FURNACE MODEL
CAP**3617A**	0.97	0.90	58CV(A,X)090–16
CAP**3621A**	0.97	0.90	58CV(A,X)090–16
CAP**4221A**	0.98	0.90	58CV(A,X)090–16
CAP**4817A**	1.01	0.94	58CV(A,X)090–16
CNPH*3017A**	0.97	0.90	58CV(A,X)090–16
CNPH*3117A**	0.99	0.92	58CV(A,X)090–16
CNPH*3617A**	0.97	0.90	58CV(A,X)090–16
CNPH*4221A**	0.98	0.90	58CV(A,X)090–16
CNPV*3017A**	0.97	0.90	58CV(A,X)090–16
CNPV*3117A**	0.99	0.92	58CV(A,X)090–16
CNPV*3617A**	0.97	0.90	58CV(A,X)090–16
CNPV*3621A**	0.97	0.90	58CV(A,X)090–16
CNPV*4217A**	0.99	0.91	58CV(A,X)090–16
CNPV*4221A**	0.98	0.90	58CV(A,X)090–16
CSPH*3012A**	0.98	0.90	58CV(A,X)090–16
CSPH*3612A**	0.99	0.92	58CV(A,X)090–16
CSPH*4212A**	0.99	0.92	58CV(A,X)090–16
CAP**3621A**	0.97	0.90	58CV(A,X)110–20
CAP**4221A**	0.98	0.90	58CV(A,X)110–20
CAP**4224A**	0.99	0.91	58CV(A,X)110–20
CAP**4821A**	1.01	0.94	58CV(A,X)110–20
CNPH*3017A**	0.97	0.90	58CV(A,X)110–20
CNPH*3117A**	0.99	0.92	58CV(A,X)110–20
CNPH*3617A**	0.97	0.90	58CV(A,X)110–20
CNPH*4221A**	0.99	0.91	58CV(A,X)110–20
CNPV*3621A**	0.97	0.90	58CV(A,X)110–20
CNPV*4221A**	0.99	0.91	58CV(A,X)110–20
CSPH*3012A**	0.98	0.90	58CV(A,X)110–20
CSPH*3612A**	0.99	0.92	58CV(A,X)110–20
CSPH*4212A**	1.00	0.92	58CV(A,X)110–20
CAP**4224A**	0.99	0.91	58CV(A,X)135–22
CAP**4824A**	1.01	0.94	58CV(A,X)135–22
CNPH*3017A**	0.97	0.90	58CV(A,X)135–22
CNPH*3117A**	0.99	0.92	58CV(A,X)135–22
CNPH*3617A**	0.97	0.90	58CV(A,X)135–22
CNPH*4221A**	0.99	0.91	58CV(A,X)135–22
CSPH*3012A**	0.98	0.90	58CV(A,X)135–22

DETAILED COOLING CAPACITIES# (CONT.)

24ABC630A30 Outdoor Section With CNPV*3117A** Indoor Section**

COOLING INDOOR MODEL	CAPACITY	POWER	FURNACE MODEL
CSPH*3612A**	0.99	0.92	58CV(A,X)135–22
CSPH*4212A**	1.00	0.92	58CV(A,X)135–22
CAP**4224A**	0.99	0.91	58CV(A,X)155–22
CAP**4824A**	1.01	0.94	58CV(A,X)155–22
CNPH*3017A**	0.97	0.90	58CV(A,X)155–22
CNPH*3117A**	0.99	0.92	58CV(A,X)155–22
CNPH*3617A**	0.97	0.90	58CV(A,X)155–22
CNPH*4221A**	0.99	0.91	58CV(A,X)155–22
CSPH*3012A**	0.98	0.90	58CV(A,X)155–22
CSPH*3612A**	0.99	0.92	58CV(A,X)155–22
CSPH*4212A**	1.00	0.92	58CV(A,X)155–22
CAP**3619A**	0.98	0.94	58HDV040––12
CNPH*3017A**	0.99	0.95	58HDV040––12
CNPH*3117A**	0.99	0.95	58HDV040––12
CNPH*3617A**	0.99	0.95	58HDV040––12
CNPV*3017A**	0.99	0.95	58HDV040––12
CNPV*3117A**	1.01	0.97	58HDV040––12
CNPV*3617A**	0.99	0.95	58HDV040––12
CNPV*3621A**	0.99	0.95	58HDV040––12
CNPV*3717A**	1.01	0.97	58HDV040––12
CSPH*3012A**	0.97	0.93	58HDV040––12
CSPH*3612A**	0.99	0.95	58HDV040––12
CAP**3619A**	0.99	0.95	58HDV060––12
CNPH*3017A**	0.99	0.95	58HDV060––12
CNPH*3117A**	0.99	0.95	58HDV060––12
CNPH*3617A**	1.00	0.96	58HDV060––12
CNPV*3017A**	1.00	0.96	58HDV060––12
CNPV*3117A**	1.01	0.97	58HDV060––12
CNPV*3617A**	1.00	0.96	58HDV060––12
CNPV*3621A**	1.00	0.96	58HDV060––12
CNPV*3717A**	1.01	0.97	58HDV060––12
CSPH*3012A**	0.98	0.94	58HDV060––12
CSPH*3612A**	1.00	0.96	58HDV060––12
CAP**4823A**	1.03	0.96	58HDV080––20
CNPH*3017A**	0.99	0.95	58HDV080––20
CNPH*3117A**	0.99	0.92	58HDV080––20
CNPH*3617A**	1.00	0.96	58HDV080––20
CNPV*3621A**	1.01	0.97	58HDV080––20
CAP**4823A**	1.01	0.94	58HDV100––20
CAP**4824A**	1.01	0.94	58HDV100––20
CNPH*3017A**	0.99	0.95	58HDV100––20
CNPH*3117A**	0.99	0.92	58HDV100––20
CNPH*3617A**	1.00	0.96	58HDV100––20
CAP**3017A**	0.99	0.91	58ME(B,C)060–12
CAP**3617A**	0.99	0.91	58ME(B,C)060–12
CAP**3621A**	0.99	0.91	58ME(B,C)060–12
CAP**4221A**	1.00	0.92	58ME(B,C)060–12
CAP**4817A**	1.01	0.94	58ME(B,C)060–12
CNPH*3017A**	0.99	0.91	58ME(B,C)060–12
CNPH*3117A**	1.01	0.93	58ME(B,C)060–12
CNPH*3617A**	0.99	0.91	58ME(B,C)060–12
CNPH*4221A**	0.99	0.92	58ME(B,C)060–12
CNPV*3017A**	0.99	0.91	58ME(B,C)060–12
CNPV*3117A**	1.01	0.93	58ME(B,C)060–12
CNPV*3617A**	0.99	0.91	58ME(B,C)060–12
CNPV*3621A**	0.99	0.91	58ME(B,C)060–12
CNPV*4217A**	1.00	0.92	58ME(B,C)060–12
CNPV*4221A**	0.99	0.92	58ME(B,C)060–12

COOLING INDOOR MODEL	CAPACITY	POWER	FURNACE MODEL
CSPH*3012A**	0.99	0.91	58ME(B,C)060–12
CSPH*3612A**	1.01	0.93	58ME(B,C)060–12
CSPH*4212A**	1.01	0.94	58ME(B,C)060–12
CAP**3017A**	0.98	0.90	58ME(B,C)080–12
CAP**3617A**	0.99	0.91	58ME(B,C)080–12
CAP**3621A**	0.99	0.91	58ME(B,C)080–12
CAP**4221A**	0.99	0.92	58ME(B,C)080–12
CAP**4817A**	1.01	0.94	58ME(B,C)080–12
CNPH*3017A**	0.98	0.90	58ME(B,C)080–12
CNPH*3117A**	1.01	0.93	58ME(B,C)080–12
CNPH*3617A**	0.98	0.90	58ME(B,C)080–12
CNPH*4221A**	0.99	0.92	58ME(B,C)080–12
CNPV*3017A**	0.98	0.90	58ME(B,C)080–12
CNPV*3117A**	1.01	0.93	58ME(B,C)080–12
CNPV*3617A**	0.98	0.90	58ME(B,C)080–12
CNPV*3621A**	0.98	0.90	58ME(B,C)080–12
CNPV*4217A**	1.00	0.92	58ME(B,C)080–12
CNPV*4221A**	0.99	0.92	58ME(B,C)080–12
CSPH*3012A**	0.99	0.91	58ME(B,C)080–12
CSPH*3612A**	1.00	0.92	58ME(B,C)080–12
CSPH*4212A**	1.01	0.93	58ME(B,C)080–12
CAP**3017A**	0.99	0.91	58ME(B,C)080–16
CAP**3617A**	0.99	0.92	58ME(B,C)080–16
CAP**3621A**	0.99	0.92	58ME(B,C)080–16
CAP**4221A**	1.00	0.92	58ME(B,C)080–16
CAP**4817A**	1.01	0.94	58ME(B,C)080–16
CNPH*3017A**	0.99	0.91	58ME(B,C)080–16
CNPH*3117A**	1.01	0.94	58ME(B,C)080–16
CNPH*3617A**	0.99	0.91	58ME(B,C)080–16
CNPH*4221A**	1.00	0.92	58ME(B,C)080–16
CNPV*3017A**	0.99	0.91	58ME(B,C)080–16
CNPV*3117A**	1.01	0.94	58ME(B,C)080–16
CNPV*3617A**	0.99	0.91	58ME(B,C)080–16
CNPV*3621A**	0.99	0.91	58ME(B,C)080–16
CNPV*4217A**	1.01	0.93	58ME(B,C)080–16
CNPV*4221A**	1.00	0.92	58ME(B,C)080–16
CSPH*3012A**	0.99	0.91	58ME(B,C)080–16
CSPH*3612A**	1.01	0.93	58ME(B,C)080–16
CSPH*4212A**	1.01	0.94	58ME(B,C)080–16
CAP**3017A**	0.99	0.91	58MEB040–12
CAP**3617A**	0.99	0.91	58MEB040–12
CAP**3621A**	0.99	0.91	58MEB040–12
CAP**4221A**	0.99	0.92	58MEB040–12
CAP**4817A**	1.01	0.94	58MEB040–12
CNPH*3017A**	0.99	0.91	58MEB040–12
CNPH*3117A**	1.01	0.93	58MEB040–12
CNPH*3617A**	0.99	0.91	58MEB040–12
CNPH*4221A**	0.99	0.92	58MEB040–12
CNPV*3017A**	0.99	0.91	58MEB040–12
CNPV*3117A**	1.01	0.93	58MEB040–12
CNPV*3617A**	0.99	0.91	58MEB040–12
CNPV*3621A**	0.99	0.91	58MEB040–12
CNPV*4217A**	1.00	0.92	58MEB040–12
CNPV*4221A**	0.99	0.92	58MEB040–12
CSPH*3012A**	0.99	0.91	58MEB040–12
CSPH*3612A**	1.01	0.93	58MEB040–12
CSPH*4212A**	1.01	0.94	58MEB040–12
CNPV*3117A**	1.01	0.94	58MEC080–16

COOLING INDOOR MODEL	CAPACITY	POWER	FURNACE MODEL
CNPV*3717A**	1.01	0.94	58MEC080–16
CAP**3017A**	0.98	0.90	58MV(B,C)060–14
CAP**3617A**	0.98	0.90	58MV(B,C)060–14
CAP**3621A**	0.99	0.91	58MV(B,C)060–14
CAP**4221A**	0.99	0.91	58MV(B,C)060–14
CAP**4817A**	1.01	0.94	58MV(B,C)060–14
CNPH*3017A**	0.98	0.90	58MV(B,C)060–14
CNPH*3117A**	1.00	0.92	58MV(B,C)060–14
CNPH*3617A**	0.98	0.90	58MV(B,C)060–14
CNPH*4221A**	0.99	0.91	58MV(B,C)060–14
CNPV*3017A**	0.98	0.90	58MV(B,C)060–14
CNPV*3117A**	1.00	0.92	58MV(B,C)060–14
CNPV*3617A**	0.98	0.90	58MV(B,C)060–14
CNPV*3621A**	0.98	0.90	58MV(B,C)060–14
CNPV*4217A**	0.99	0.92	58MV(B,C)060–14
CNPV*4221A**	0.99	0.91	58MV(B,C)060–14
CSPH*3012A**	0.98	0.90	58MV(B,C)060–14
CSPH*3612A**	0.99	0.92	58MV(B,C)060–14
CSPH*4212A**	1.00	0.92	58MV(B,C)060–14
CAP**3621A**	0.97	0.89	58MV(B,C)080–14
CAP**4221A**	0.98	0.90	58MV(B,C)080–14
CAP**4224A**	0.98	0.90	58MV(B,C)080–14
CAP**4821A**	1.01	0.93	58MV(B,C)080–14
CNPH*3017A**	0.97	0.93	58MV(B,C)080–14
CNPH*3117A**	0.99	0.91	58MV(B,C)080–14
CNPH*3617A**	0.97	0.93	58MV(B,C)080–14
CNPH*4221A**	0.98	0.90	58MV(B,C)080–14
CNPV*3621A**	0.97	0.93	58MV(B,C)080–14
CNPV*4221A**	0.98	0.90	58MV(B,C)080–14
CNPV*4821A**	1.01	0.94	58MV(B,C)080–14
CSPH*3012A**	0.97	0.93	58MV(B,C)080–14
CSPH*3612A**	0.99	0.91	58MV(B,C)080–14
CSPH*4212A**	0.99	0.92	58MV(B,C)080–14
CAP**3621A**	0.97	0.90	58MV(B,C)080–20
CAP**4221A**	0.98	0.90	58MV(B,C)080–20
CAP**4224A**	0.98	0.90	58MV(B,C)080–20
CAP**4821A**	1.01	0.93	58MV(B,C)080–20
CNPH*3017A**	0.97	0.93	58MV(B,C)080–20
CNPH*3117A**	0.99	0.92	58MV(B,C)080–20
CNPH*3617A**	0.97	0.93	58MV(B,C)080–20
CNPH*4221A**	0.98	0.90	58MV(B,C)080–20
CNPV*3621A**	0.97	0.93	58MV(B,C)080–20
CNPV*4221A**	0.98	0.90	58MV(B,C)080–20
CNPV*4821A**	1.01	0.94	58MV(B,C)080–20
CSPH*3012A**	0.98	0.94	58MV(B,C)080–20
CSPH*3612A**	0.99	0.92	58MV(B,C)080–20
CSPH*4212A**	0.99	0.92	58MV(B,C)080–20
CAP**3621A**	0.97	0.89	58MV(B,C)100–20
CAP**4221A**	0.97	0.90	58MV(B,C)100–20
CAP**4224A**	0.97	0.90	58MV(B,C)100–20
CAP**4821A**	1.00	0.92	58MV(B,C)100–20
CNPH*3017A**	0.97	0.93	58MV(B,C)100–20
CNPH*3117A**	0.99	0.91	58MV(B,C)100–20
CNPH*3617A**	0.97	0.93	58MV(B,C)100–20
CNPH*4221A**	0.97	0.90	58MV(B,C)100–20
CNPV*3621A**	0.97	0.93	58MV(B,C)100–20
CNPV*4221A**	0.97	0.90	58MV(B,C)100–20
CNPV*4821A**	1.01	0.94	58MV(B,C)100–20

DETAILED COOLING CAPACITIES# (CONT.)

24ABC630A30 Outdoor Section With CNPV*3117A** Indoor Section**

COOLING INDOOR MODEL	CAPACITY	POWER	FURNACE MODEL
CSPH*3012A**	0.97	0.93	58MV(B,C)100–20
CSPH*3612A**	0.99	0.91	58MV(B,C)100–20
CSPH*4212A**	0.99	0.91	58MV(B,C)100–20
CAP**4224A**	0.98	0.90	58MV(B,C)120–20
CAP**4824A**	1.01	0.94	58MV(B,C)120–20
CNPH*3017A**	0.97	0.90	58MV(B,C)120–20
CNPH*3117A**	0.99	0.92	58MV(B,C)120–20
CNPH*3617A**	0.97	0.90	58MV(B,C)120–20
CNPH*4221A**	0.99	0.91	58MV(B,C)120–20
CSPH*3012A**	0.98	0.90	58MV(B,C)120–20
CSPH*3612A**	0.99	0.92	58MV(B,C)120–20
CSPH*4212A**	1.00	0.92	58MV(B,C)120–20
CAP**4224A**	0.98	0.90	58MVB040–14
CAP**4824A**	1.01	0.93	58MVB040–14
CNPH*3017A**	0.97	0.93	58MVB040–14
CNPH*3117A**	0.99	0.92	58MVB040–14
CNPH*3617A**	0.97	0.93	58MVB040–14
CNPH*4221A**	0.98	0.90	58MVB040–14
CSPH*3012A**	0.97	0.93	58MVB040–14
CSPH*3612A**	0.99	0.91	58MVB040–14
CSPH*4212A**	0.99	0.92	58MVB040–14
CAP**3017A**	0.98	0.94	58PH*070–16
CAP**3617A**	0.98	0.94	58PH*070–16
CAP**3621A**	0.98	0.90	58PH*070–16
CAP**4221A**	0.99	0.95	58PH*070–16
CAP**4817A**	1.01	0.94	58PH*070–16
CNPH*3017A**	0.98	0.94	58PH*070–16
CNPH*3117A**	1.00	0.92	58PH*070–16
CNPH*3617A**	0.98	0.94	58PH*070–16
CNPH*4221A**	0.99	0.95	58PH*070–16
CNPV*3017A**	0.98	0.94	58PH*070–16
CNPV*3117A**	1.00	0.92	58PH*070–16
CNPV*3617A**	0.98	0.94	58PH*070–16
CNPV*3621A**	0.98	0.94	58PH*070–16
CNPV*4217A**	0.99	0.92	58PH*070–16
CNPV*4221A**	0.99	0.95	58PH*070–16
CSPH*3012A**	0.98	0.94	58PH*070–16
CSPH*3612A**	1.00	0.92	58PH*070–16
CSPH*4212A**	1.00	0.92	58PH*070–16
CAP**3621A**	0.99	0.91	58PH*090–16
CAP**4221A**	0.99	0.92	58PH*090–16
CAP**4224A**	0.99	0.92	58PH*090–16
CAP**4821A**	1.01	0.94	58PH*090–16
CNPH*3017A**	0.98	0.94	58PH*090–16
CNPH*3117A**	1.00	0.92	58PH*090–16
CNPH*3617A**	0.98	0.94	58PH*090–16
CNPH*4221A**	0.99	0.92	58PH*090–16
CNPV*3621A**	0.98	0.94	58PH*090–16
CNPV*4221A**	0.99	0.92	58PH*090–16
CSPH*3012A**	0.98	0.94	58PH*090–16
CSPH*3612A**	1.00	0.92	58PH*090–16
CSPH*4212A**	1.01	0.93	58PH*090–16
CAP**3017A**	0.98	0.90	58UVB060–14
CAP**3017A**	0.98	0.90	58UVB060–14
CAP**3617A**	0.98	0.90	58UVB060–14
CAP**3617A**	0.98	0.90	58UVB060–14
CAP**3621A**	0.99	0.91	58UVB060–14
CAP**3621A**	0.99	0.91	58UVB060–14

COOLING INDOOR MODEL	CAPACITY	POWER	FURNACE MODEL
CAP**4221A**	0.99	0.91	58UVB060–14
CAP**4221A**	0.99	0.91	58UVB060–14
CAP**4817A**	1.01	0.94	58UVB060–14
CAP**4817A**	1.01	0.94	58UVB060–14
CNPV*3017A**	0.98	0.90	58UVB060–14
CNPV*3017A**	0.98	0.90	58UVB060–14
CNPV*3117A**	1.00	0.92	58UVB060–14
CNPV*3117A**	1.00	0.92	58UVB060–14
CNPV*3617A**	0.98	0.90	58UVB060–14
CNPV*3617A**	0.98	0.90	58UVB060–14
CNPV*3621A**	0.98	0.90	58UVB060–14
CNPV*3621A**	0.98	0.90	58UVB060–14
CNPV*4217A**	0.99	0.92	58UVB060–14
CNPV*4217A**	0.99	0.92	58UVB060–14
CNPV*4221A**	0.99	0.91	58UVB060–14
CNPV*4221A**	0.99	0.91	58UVB060–14
CAP**3621A**	0.97	0.89	58UVB080–14
CAP**3621A**	0.97	0.89	58UVB080–14
CAP**4221A**	0.98	0.90	58UVB080–14
CAP**4221A**	0.98	0.90	58UVB080–14
CAP**4224A**	0.98	0.90	58UVB080–14
CAP**4224A**	0.98	0.90	58UVB080–14
CAP**4821A**	1.01	0.93	58UVB080–14
CAP**4821A**	1.01	0.93	58UVB080–14
CNPV*3621A**	0.97	0.93	58UVB080–14
CNPV*3621A**	0.97	0.93	58UVB080–14
CNPV*4221A**	0.98	0.90	58UVB080–14
CNPV*4221A**	0.98	0.90	58UVB080–14
CNPV*4821A**	1.01	0.94	58UVB080–14
CAP**3621A**	0.97	0.90	58UVB080–20
CAP**3621A**	0.97	0.90	58UVB080–20
CAP**4221A**	0.98	0.90	58UVB080–20
CAP**4221A**	0.98	0.90	58UVB080–20
CAP**4224A**	0.98	0.90	58UVB080–20
CAP**4224A**	0.98	0.90	58UVB080–20
CAP**4821A**	1.01	0.93	58UVB080–20
CAP**4821A**	1.01	0.93	58UVB080–20
CNPV*3621A**	0.97	0.93	58UVB080–20
CNPV*3621A**	0.97	0.93	58UVB080–20
CNPV*4221A**	0.98	0.90	58UVB080–20
CNPV*4221A**	0.98	0.90	58UVB080–20
CNPV*4821A**	1.01	0.94	58UVB080–20
CAP**3621A**	0.97	0.89	58UVB100–20
CAP**3621A**	0.97	0.89	58UVB100–20
CAP**4221A**	0.97	0.90	58UVB100–20
CAP**4221A**	0.97	0.90	58UVB100–20
CAP**4224A**	0.97	0.90	58UVB100–20
CAP**4224A**	0.97	0.90	58UVB100–20
CAP**4821A**	1.00	0.92	58UVB100–20
CAP**4821A**	1.00	0.92	58UVB100–20
CNPV*3621A**	0.97	0.93	58UVB100–20
CNPV*3621A**	0.97	0.93	58UVB100–20
CNPV*4221A**	0.97	0.90	58UVB100–20
CNPV*4221A**	0.97	0.90	58UVB100–20
CNPV*4821A**	1.01	0.94	58UVB100–20
CAP**4224A**	0.98	0.90	58UVB120–20
CAP**4224A**	0.98	0.90	58UVB120–20
CAP**4824A**	1.01	0.94	58UVB120–20

COOLING INDOOR MODEL	CAPACITY	POWER	FURNACE MODEL
CAP**4824A**	1.01	0.94	58UVB120–20
CAP**3017A**	0.97	0.90	58VLR105–12
CAP**3617A**	0.98	0.90	58VLR105–12
CAP**3621A**	0.98	0.90	58VLR105–12
CAP**4221A**	0.99	0.91	58VLR105–12
CAP**4817A**	1.01	0.94	58VLR105–12
CNPH*3017A**	0.98	0.90	58VLR105–12
CNPH*3617A**	0.98	0.90	58VLR105–12
CNPH*4221A**	0.99	0.91	58VLR105–12
CNPV*3017A**	0.98	0.90	58VLR105–12
CNPV*3117A**	1.00	0.92	58VLR105–12
CNPV*3617A**	0.98	0.90	58VLR105–12
CNPV*3621A**	0.98	0.90	58VLR105–12
CNPV*4217A**	0.99	0.92	58VLR105–12
CNPV*4221A**	0.99	0.91	58VLR105–12
CSPH*3012A**	0.98	0.90	58VLR105–12
CSPH*3612A**	0.99	0.92	58VLR105–12
CSPH*4212A**	1.00	0.92	58VLR105–12
CAP**3017A**	0.97	0.89	58VMR105–12
CAP**3617A**	0.97	0.89	58VMR105–12
CAP**3621A**	0.97	0.89	58VMR105–12
CAP**4221A**	0.97	0.90	58VMR105–12
CAP**4817A**	1.01	0.93	58VMR105–12
CNPH*3017A**	0.97	0.89	58VMR105–12
CNPH*3617A**	0.97	0.89	58VMR105–12
CNPH*4221A**	0.97	0.90	58VMR105–12
CNPV*3017A**	0.97	0.89	58VMR105–12
CNPV*3117A**	0.99	0.91	58VMR105–12
CNPV*3617A**	0.97	0.89	58VMR105–12
CNPV*3621A**	0.97	0.89	58VMR105–12
CNPV*4217A**	0.98	0.90	58VMR105–12
CNPV*4221A**	0.97	0.90	58VMR105–12
CSPH*3012A**	0.97	0.89	58VMR105–12
CSPH*3612A**	0.98	0.90	58VMR105–12
CSPH*4212A**	0.99	0.91	58VMR105–12
CAP**3017A**	0.99	0.93	59*N*A060V17**14
CAP**3617A**	0.99	0.94	59*N*A060V17**14
CAP**3619A**	0.99	0.94	59*N*A060V17**14
CAP**3621A**	0.99	0.94	59*N*A060V17**14
CNPH*3017A**	0.99	0.93	59*N*A060V17**14
CNPH*3117A**	1.01	0.94	59*N*A060V17**14
CNPH*3617A**	0.99	0.93	59*N*A060V17**14
CNPV*3017A**	0.99	0.93	59*N*A060V17**14
CNPV*3117A**	1.01	0.94	59*N*A060V17**14
CNPV*3617A**	0.99	0.93	59*N*A060V17**14
CNPV*3621A**	0.99	0.94	59*N*A060V17**14
CNPV*3717A**	1.02	0.94	59*N*A060V17**14
CSPH*3012A**	0.99	0.94	59*N*A060V17**14
CSPH*3612A**	1.01	0.93	59*N*A060V17**14
CAP**3017A**	0.99	0.94	59*N*A080V17**14
CAP**3617A**	1.00	0.92	59*N*A080V17**14
CAP**3619A**	1.00	0.92	59*N*A080V17**14
CAP**3621A**	1.00	0.92	59*N*A080V17**14
CNPH*3017A**	0.99	0.94	59*N*A080V17**14
CNPH*3117A**	1.01	0.94	59*N*A080V17**14
CNPH*3617A**	0.99	0.94	59*N*A080V17**14
CNPV*3017A**	0.99	0.94	59*N*A080V17**14
CNPV*3117A**	1.01	0.94	59*N*A080V17**14

DETAILED COOLING CAPACITIES# (CONT.)

24ABC630A30 Outdoor Section With CNPV*3117A** Indoor Section**

COOLING INDOOR MODEL	CAPACITY	POWER	FURNACE MODEL
CNPV*3617A**	0.99	0.94	59*N*A080V17**14
CNPV*3621A**	0.99	0.94	59*N*A080V17**14
CNPV*3717A**	1.03	0.93	59*N*A080V17**14
CSPH*3012A**	1.00	0.94	59*N*A080V17**14
CSPH*3612A**	1.01	0.94	59*N*A080V17**14
CAP**3619A**	1.00	0.92	59*N*A100V21**20
CAP**3621A**	1.00	0.92	59*N*A100V21**20
CNPH*3017A**	1.00	0.94	59*N*A100V21**20
CNPH*3117A**	1.02	0.94	59*N*A100V21**20
CNPH*3617A**	1.00	0.94	59*N*A100V21**20
CNPV*3621A**	1.00	0.94	59*N*A100V21**20
CSPH*3012A**	1.01	0.95	59*N*A100V21**20
CSPH*3612A**	1.02	0.94	59*N*A100V21**20
CNPH*3017A**	1.00	0.92	59*N*A120V24**22
CNPH*3117A**	1.02	0.93	59*N*A120V24**22
CNPH*3617A**	1.00	0.92	59*N*A120V24**22
CSPH*3012A**	1.00	0.92	59*N*A120V24**22
CSPH*3612A**	1.01	0.92	59*N*A120V24**22
CAP**3017A**	0.99	0.94	59*P5A060E17**14
CAP**3617A**	1.00	0.94	59*P5A060E17**14
CAP**3619A**	1.00	0.94	59*P5A060E17**14
CAP**3621A**	1.01	0.95	59*P5A060E17**14
CNPH*3017A**	1.00	0.94	59*P5A060E17**14
CNPH*3117A**	1.02	0.94	59*P5A060E17**14
CNPH*3617A**	1.00	0.94	59*P5A060E17**14
CNPV*3017A**	1.00	0.94	59*P5A060E17**14
CNPV*3117A**	1.02	0.94	59*P5A060E17**14
CNPV*3617A**	1.00	0.94	59*P5A060E17**14
CNPV*3621A**	1.00	0.94	59*P5A060E17**14
CNPV*3717A**	1.03	0.96	59*P5A060E17**14
CSPH*3012A**	1.00	0.94	59*P5A060E17**14
CSPH*3612A**	1.02	0.94	59*P5A060E17**14
CAP**3017A**	1.01	0.95	59*P5A080E17**16
CAP**3617A**	1.01	0.95	59*P5A080E17**16
CAP**3619A**	1.01	0.95	59*P5A080E17**16
CAP**3621A**	1.01	0.96	59*P5A080E17**16
CNPH*3017A**	1.01	0.95	59*P5A080E17**16
CNPH*3117A**	1.03	0.95	59*P5A080E17**16
CNPH*3617A**	1.01	0.95	59*P5A080E17**16
CNPV*3017A**	1.01	0.95	59*P5A080E17**16
CNPV*3117A**	1.03	0.95	59*P5A080E17**16
CNPV*3617A**	1.01	0.95	59*P5A080E17**16
CNPV*3621A**	1.01	0.95	59*P5A080E17**16
CNPV*3717A**	1.04	0.96	59*P5A080E17**16
CSPH*3012A**	1.01	0.95	59*P5A080E17**16
CSPH*3612A**	1.03	0.95	59*P5A080E17**16
CAP**3017A**	0.99	0.92	OVLAAB036098
CAP**3617A**	0.99	0.92	OVLAAB036098
CNPH*3017A**	0.99	0.95	OVLAAB036098
CNPH*3117A**	1.01	0.97	OVLAAB036098
CNPH*3617A**	0.99	0.95	OVLAAB036098
CNPV*3017A**	0.99	0.95	OVLAAB036098
CNPV*3117A**	1.01	0.97	OVLAAB036098
CNPV*3617A**	0.99	0.95	OVLAAB036098
CNPV*3621A**	0.99	0.95	OVLAAB036098
CNPV*3717A**	1.01	0.94	OVLAAB036098
CSPH*3012A**	0.99	0.95	OVLAAB036098
CSPH*3612A**	1.01	0.97	OVLAAB036098
CNPH*3017A**	1.00	0.96	OVLAAB048112

COOLING INDOOR MODEL	CAPACITY	POWER	FURNACE MODEL
CNPH*3117A**	1.01	0.97	OVLAAB048112
CNPH*3617A**	1.00	0.96	OVLAAB048112
CNPV*3621A**	1.00	0.96	OVLAAB048112
CSPH*3012A**	1.01	0.97	OVLAAB048112
CSPH*3612A**	0.87	0.84	OVLAAB048112
CAP**3017A**	0.99	0.92	OVMAAB036098
CAP**3617A**	0.99	0.92	OVMAAB036098
CNPH*3017A**	0.99	0.95	OVMAAB036098
CNPH*3117A**	1.01	0.97	OVMAAB036098
CNPH*3617A**	0.99	0.95	OVMAAB036098
CNPV*3017A**	0.99	0.95	OVMAAB036098
CNPV*3117A**	1.01	0.97	OVMAAB036098
CNPV*3617A**	0.99	0.95	OVMAAB036098
CNPV*3621A**	0.99	0.95	OVMAAB036098
CNPV*3717A**	1.01	0.97	OVMAAB036098
CSPH*3012A**	1.00	0.96	OVMAAB036098
CSPH*3612A**	1.01	0.97	OVMAAB036098
CNPH*3017A**	1.00	0.96	OVMAAB042112
CNPH*3117A**	1.01	0.94	OVMAAB042112
CNPH*3617A**	1.00	0.96	OVMAAB042112
CNPV*3017A**	1.00	0.96	OVMAAB042112
CNPV*3117A**	1.01	0.97	OVMAAB042112
CNPV*3617A**	1.00	0.96	OVMAAB042112
CNPV*3621A**	1.00	0.96	OVMAAB042112
CNPV*3717A**	1.01	0.94	OVMAAB042112
CSPH*3012A**	1.00	0.96	OVMAAB042112
CSPH*3612A**	1.01	0.94	OVMAAB042112

See notes on pg. 78

DETAILED COOLING CAPACITIES# (CONT.)

EVAPORATOR AIR		CONDENSER ENTERING AIR TEMPERATURES °F (°C)																	
		75 (23.9)			85 (29.4)			95 (35)			105 (40.6)			115 (46.1)			125 (51.7)		
CFM	EWB °F (°C)	Capacity MBtuh†		Total System KW**	Capacity MBtuh†		Total System KW**	Capacity MBtuh†		Total System KW**	Capacity MBtuh†		Total System KW**	Capacity MBtuh†		Total System KW**	Capacity MBtuh†		Total System KW**
		Total	Sens‡		Total	Sens‡		Total	Sens‡		Total	Sens‡		Total	Sens‡		Total	Sens‡	
24ABC636A**30 Outdoor Section With CNPV*3717A** Indoor Section																			
1050	72 (22.2)	41.06	20.24	2.39	39.22	19.60	2.65	37.27	18.94	2.95	35.20	18.24	3.28	33.01	17.50	3.66	30.65	16.73	4.11
	67 (19.4)	37.33	24.93	2.37	35.65	24.28	2.63	33.87	23.61	2.93	31.96	22.90	3.26	29.95	22.15	3.65	27.79	21.36	4.09
	63 (17.2)††	34.65	23.97	2.36	33.08	23.32	2.62	31.40	22.64	2.92	29.62	21.92	3.25	27.73	21.17	3.64	25.71	20.37	4.09
	62 (16.7)	34.09	29.55	2.36	32.58	28.89	2.62	31.00	28.17	2.91	29.47	29.47	3.25	27.95	27.95	3.64	26.29	26.29	4.09
	57 (13.9)	33.38	33.38	2.35	32.16	32.16	2.62	30.85	30.85	2.91	29.43	29.43	3.25	27.91	27.91	3.64	26.25	26.25	4.09
1200	72 (22.2)	41.77	21.32	2.45	39.84	20.66	2.72	37.82	19.99	3.01	35.67	19.28	3.35	33.39	18.53	3.73	30.96	17.75	4.17
	67 (19.4)	38.02	26.65	2.43	36.25	25.99	2.70	34.40	25.30	2.99	32.44	24.58	3.32	30.35	23.82	3.71	28.13	23.01	4.15
	63 (17.2)††	35.31	25.57	2.42	33.66	24.91	2.69	31.93	24.22	2.98	30.09	23.48	3.31	28.13	22.71	3.70	26.05	21.89	4.15
	62 (16.7)	34.94	31.83	2.42	33.53	33.53	2.69	32.12	32.12	2.98	30.60	30.60	3.32	28.97	28.97	3.70	27.21	27.21	4.15
	57 (13.9)	34.80	34.80	2.42	33.47	33.47	2.68	32.07	32.07	2.98	30.55	30.55	3.32	28.93	28.93	3.70	27.17	27.17	4.15
1350	72 (22.2)	42.28	22.34	2.52	40.29	21.68	2.78	38.19	20.99	3.08	35.98	20.27	3.41	33.65	19.52	3.79	31.16	18.72	4.23
	67 (19.4)	38.51	28.29	2.50	36.70	27.62	2.76	34.80	26.93	3.05	32.78	26.19	3.39	30.65	25.41	3.77	28.39	24.57	4.22
	63 (17.2)††	35.80	27.10	2.48	34.11	26.43	2.75	32.32	25.72	3.04	30.43	24.97	3.38	28.44	24.18	3.76	26.32	23.32	4.21
	62 (16.7)	36.01	36.01	2.48	34.61	34.61	2.75	33.12	33.12	3.05	31.51	31.51	3.38	29.80	29.80	3.77	27.94	27.94	4.21
	57 (13.9)	35.96	35.96	2.48	34.56	34.56	2.75	33.08	33.08	3.04	31.47	31.47	3.38	29.76	29.76	3.77	27.91	27.91	4.21

COOLING INDOOR MODEL	CAPACITY	POWER	FURNACE MODEL
*CNPV*3717A**	1.00	1.00	
CAP**3614A**	0.95	0.99	
CAP**3617A**	0.96	1.00	
CAP**3619A**	0.96	1.00	
CAP**3621A**	0.96	1.00	
CAP**4221A**	0.97	1.01	
CAP**4224A**	0.97	1.01	
CAP**4817A**	0.99	1.03	
CAP**4821A**	0.98	1.03	
CAP**4823A**	0.98	1.03	
CAP**4824A**	0.98	1.03	
CAP**6021A**	0.99	0.99	
CAP**6024A**	0.99	0.99	
CAP**6025A**	1.01	1.01	
CNPF*3618A**	0.96	1.05	
CNPF*4818A**	0.98	1.03	
CNPH*3617A**	0.96	1.00	
CNPH*4221A**	0.97	1.01	
CNPH*4321A**	1.01	1.01	
CNPH*4821A**	0.99	0.99	
CNPV*3617A**	0.96	1.00	
CNPV*3621A**	0.96	1.00	
CNPV*4217A**	0.98	1.03	
CNPV*4221A**	0.97	1.01	
CNPV*4324A**	1.00	1.00	
CNPV*4821A**	0.99	1.03	
CNPV*4824A**	0.99	1.03	
CSPH*3612A**	0.98	1.03	
CSPH*4212A**	0.99	1.03	
CSPH*4812A**	0.99	1.04	
FB4CNF036	0.96	0.96	
FB4CNF036	0.96	1.00	
FB4CNF042	0.99	0.95	
FB4CNF042	0.99	0.99	
FE4AN(B,F)003	0.97	0.89	
FE4AN(B,F)005	0.99	0.92	
FE4ANB006	1.01	0.89	

COOLING INDOOR MODEL	CAPACITY	POWER	FURNACE MODEL
FE4ANF002	0.96	0.96	
FE5ANB004	1.01	0.89	
FF1ENP036	0.96	1.05	
FF1ENP037	0.97	1.01	
FV4BN(B,F)003	0.98	0.90	
FV4BN(B,F)005	1.01	0.89	
FV4BNB006	1.02	0.89	
FV4BNF002	0.97	0.93	
FV4CN(B,F)003	0.97	0.89	
FV4CN(B,F)005	0.99	0.92	
FV4CNB006	1.01	0.89	
FV4CNF002	0.96	0.96	
FX4CN(B,F)036	0.99	0.95	
FX4CN(B,F)042	1.00	0.96	
FX4CN(B,F)048	1.01	1.00	
FX4DN(B,F)037	0.99	0.92	
FX4DN(B,F)043	0.99	0.92	
FX4DN(B,F)049	1.01	0.93	
FY4ANF036	0.97	1.01	
FY4ANF042	0.99	1.01	
FY4ANF048	1.01	1.03	
FY5BNF036	0.97	1.01	
FY5BNF036	0.97	1.01	
FY5BNF042	0.98	0.98	
FY5BNF042	0.98	1.03	
CAP**3614A**	0.95	0.95	58CV(A,X)070–12
CAP**3617A**	0.95	0.95	58CV(A,X)070–12
CAP**4817A**	0.98	0.94	58CV(A,X)070–12
CNPH*3617A**	0.95	0.95	58CV(A,X)070–12
CNPH*4221A**	0.96	0.96	58CV(A,X)070–12
CNPH*4321A**	1.00	0.92	58CV(A,X)070–12
CNPH*4821A**	0.98	0.94	58CV(A,X)070–12
CNPV*3617A**	0.95	0.95	58CV(A,X)070–12
CNPV*3717A**	0.99	0.95	58CV(A,X)070–12
CNPV*4217A**	0.97	0.93	58CV(A,X)070–12
CSPH*3612A**	0.97	0.93	58CV(A,X)070–12
CSPH*4212A**	0.98	0.94	58CV(A,X)070–12

COOLING INDOOR MODEL	CAPACITY	POWER	FURNACE MODEL
CSPH*4812A**	0.98	0.94	58CV(A,X)070–12
CAP**3617A**	0.96	0.92	58CV(A,X)090–16
CAP**3621A**	0.96	0.92	58CV(A,X)090–16
CAP**4221A**	0.97	0.93	58CV(A,X)090–16
CAP**4817A**	0.98	0.91	58CV(A,X)090–16
CAP**4821A**	0.98	0.90	58CV(A,X)090–16
CNPH*3617A**	0.95	0.92	58CV(A,X)090–16
CNPH*4221A**	0.97	0.93	58CV(A,X)090–16
CNPH*4321A**	1.00	0.91	58CV(A,X)090–16
CNPH*4821A**	0.98	0.90	58CV(A,X)090–16
CNPV*3617A**	0.95	0.95	58CV(A,X)090–16
CNPV*3621A**	0.95	0.92	58CV(A,X)090–16
CNPV*3717A**	0.99	0.91	58CV(A,X)090–16
CNPV*4217A**	0.97	0.93	58CV(A,X)090–16
CNPV*4221A**	0.97	0.93	58CV(A,X)090–16
CNPV*4821A**	0.98	0.90	58CV(A,X)090–16
CSPH*3612A**	0.98	0.90	58CV(A,X)090–16
CSPH*4212A**	0.98	0.91	58CV(A,X)090–16
CSPH*4812A**	0.98	0.91	58CV(A,X)090–16
CAP**3621A**	0.96	0.92	58CV(A,X)110–20
CAP**4221A**	0.97	0.93	58CV(A,X)110–20
CAP**4224A**	0.97	0.89	58CV(A,X)110–20
CAP**4821A**	0.98	0.90	58CV(A,X)110–20
CAP**4824A**	0.98	0.90	58CV(A,X)110–20
CAP**6021A**	0.99	0.91	58CV(A,X)110–20
CNPH*3617A**	0.95	0.92	58CV(A,X)110–20
CNPH*4221A**	0.97	0.93	58CV(A,X)110–20
CNPH*4321A**	1.01	0.91	58CV(A,X)110–20
CNPH*4821A**	0.98	0.91	58CV(A,X)110–20
CNPV*3621A**	0.96	0.92	58CV(A,X)110–20
CNPV*4221A**	0.97	0.93	58CV(A,X)110–20
CNPV*4821A**	0.98	0.91	58CV(A,X)110–20
CNPV*4824A**	0.98	0.91	58CV(A,X)110–20
CSPH*3612A**	0.98	0.90	58CV(A,X)110–20
CSPH*4212A**	0.98	0.91	58CV(A,X)110–20
CSPH*4812A**	0.99	0.91	58CV(A,X)110–20
CAP**4224A**	0.97	0.89	58CV(A,X)135–22

DETAILED COOLING CAPACITIES# (CONT.)

24ABC636A30 Outdoor Section With CNPV*3717A** Indoor Section**

COOLING INDOOR MODEL	CAPACITY	POWER	FURNACE MODEL
CAP**4824A**	0.98	0.90	58CV(A,X)135–22
CAP**6024A**	0.99	0.91	58CV(A,X)135–22
CAP**6025A**	0.99	0.91	58CV(A,X)135–22
CNPH*3617A**	0.95	0.92	58CV(A,X)135–22
CNPH*4221A**	0.97	0.93	58CV(A,X)135–22
CNPH*4321A**	1.01	0.91	58CV(A,X)135–22
CNPH*4821A**	0.98	0.91	58CV(A,X)135–22
CNPV*4324A**	1.01	0.89	58CV(A,X)135–22
CNPV*4824A**	0.98	0.91	58CV(A,X)135–22
CSPH*3612A**	0.98	0.90	58CV(A,X)135–22
CSPH*4212A**	0.98	0.91	58CV(A,X)135–22
CSPH*4812A**	0.99	0.91	58CV(A,X)135–22
CAP**4224A**	0.97	0.90	58CV(A,X)155–22
CAP**4824A**	0.98	0.91	58CV(A,X)155–22
CAP**6024A**	0.99	0.91	58CV(A,X)155–22
CAP**6025A**	0.99	0.91	58CV(A,X)155–22
CNPH*3617A**	0.96	0.92	58CV(A,X)155–22
CNPH*4221A**	0.97	0.90	58CV(A,X)155–22
CNPH*4321A**	1.01	0.89	58CV(A,X)155–22
CNPH*4821A**	0.98	0.91	58CV(A,X)155–22
CNPV*4324A**	1.01	0.89	58CV(A,X)155–22
CNPV*4824A**	0.98	0.91	58CV(A,X)155–22
CSPH*3612A**	0.98	0.91	58CV(A,X)155–22
CSPH*4212A**	0.99	0.91	58CV(A,X)155–22
CSPH*4812A**	0.99	0.91	58CV(A,X)155–22
CAP**3619A**	0.95	0.99	58HDV040––12
CNPH*3617A**	0.97	0.97	58HDV040––12
CNPH*4221A**	0.98	0.98	58HDV040––12
CNPH*4321A**	0.98	0.94	58HDV040––12
CNPV*3617A**	0.96	0.96	58HDV040––12
CNPV*3621A**	0.97	0.97	58HDV040––12
CNPV*3717A**	1.00	1.00	58HDV040––12
CNPV*4217A**	0.98	0.98	58HDV040––12
CNPV*4221A**	0.98	0.98	58HDV040––12
CSPH*3612A**	0.97	0.97	58HDV040––12
CSPH*4212A**	0.98	0.98	58HDV040––12
CAP**3619A**	0.96	0.96	58HDV060––12
CAP**4823A**	0.98	0.98	58HDV060––12
CNPH*3617A**	0.97	0.97	58HDV060––12
CNPH*4221A**	0.98	0.98	58HDV060––12
CNPH*4321A**	0.98	0.94	58HDV060––12
CNPV*3617A**	0.97	0.97	58HDV060––12
CNPV*3621A**	0.97	0.97	58HDV060––12
CNPV*3717A**	1.01	0.97	58HDV060––12
CNPV*4217A**	0.99	0.99	58HDV060––12
CNPV*4221A**	0.98	0.98	58HDV060––12
CSPH*3612A**	0.98	0.98	58HDV060––12
CSPH*4212A**	0.99	0.99	58HDV060––12
CAP**4823A**	0.99	0.95	58HDV080––20
CNPH*3617A**	0.97	0.93	58HDV080––20
CNPH*4221A**	0.98	0.94	58HDV080––20
CNPH*4321A**	0.98	0.90	58HDV080––20
CNPV*3621A**	0.98	0.94	58HDV080––20
CNPV*4221A**	0.99	0.95	58HDV080––20
CNPV*4324A**	1.01	0.93	58HDV080––20
CSPH*3612A**	0.99	0.95	58HDV080––20
CSPH*4212A**	1.00	0.96	58HDV080––20
CAP**6024A**	0.99	0.91	58HDV100––20

COOLING INDOOR MODEL	CAPACITY	POWER	FURNACE MODEL
CAP**6025A**	0.99	0.91	58HDV100––20
CNPH*3617A**	0.97	0.93	58HDV100––20
CNPH*4221A**	0.98	0.94	58HDV100––20
CNPH*4321A**	0.98	0.90	58HDV100––20
CNPV*4324A**	1.01	0.93	58HDV100––20
CSPH*3612A**	0.99	0.95	58HDV100––20
CSPH*4212A**	0.99	0.92	58HDV100––20
CAP**3617A**	0.97	0.93	58ME(B,C)060–12
CAP**3621A**	0.97	0.93	58ME(B,C)060–12
CAP**4221A**	0.98	0.94	58ME(B,C)060–12
CAP**4817A**	0.99	0.92	58ME(B,C)060–12
CAP**4821A**	0.99	0.91	58ME(B,C)060–12
CNPH*3617A**	0.96	0.96	58ME(B,C)060–12
CNPH*4221A**	0.97	0.93	58ME(B,C)060–12
CNPH*4321A**	1.02	0.92	58ME(B,C)060–12
CNPH*4821A**	0.99	0.92	58ME(B,C)060–12
CNPV*3617A**	0.96	0.96	58ME(B,C)060–12
CNPV*3621A**	0.96	0.96	58ME(B,C)060–12
CNPV*3717A**	1.00	0.92	58ME(B,C)060–12
CNPV*4217A**	0.98	0.94	58ME(B,C)060–12
CNPV*4221A**	0.97	0.93	58ME(B,C)060–12
CNPV*4821A**	0.99	0.92	58ME(B,C)060–12
CSPH*3612A**	0.98	0.94	58ME(B,C)060–12
CSPH*4212A**	0.99	0.92	58ME(B,C)060–12
CSPH*4812A**	0.99	0.92	58ME(B,C)060–12
CAP**3617A**	0.96	0.92	58ME(B,C)080–12
CAP**3621A**	0.97	0.93	58ME(B,C)080–12
CAP**4221A**	0.97	0.93	58ME(B,C)080–12
CAP**4817A**	0.99	0.91	58ME(B,C)080–12
CAP**4821A**	0.98	0.91	58ME(B,C)080–12
CNPH*3617A**	0.96	0.92	58ME(B,C)080–12
CNPH*4221A**	0.97	0.93	58ME(B,C)080–12
CNPH*4321A**	1.01	0.92	58ME(B,C)080–12
CNPH*4821A**	0.99	0.91	58ME(B,C)080–12
CNPV*3617A**	0.96	0.96	58ME(B,C)080–12
CNPV*3621A**	0.96	0.92	58ME(B,C)080–12
CNPV*3717A**	0.99	0.92	58ME(B,C)080–12
CNPV*4217A**	0.98	0.94	58ME(B,C)080–12
CNPV*4221A**	0.97	0.93	58ME(B,C)080–12
CNPV*4821A**	0.99	0.91	58ME(B,C)080–12
CSPH*3612A**	0.98	0.91	58ME(B,C)080–12
CSPH*4212A**	0.99	0.91	58ME(B,C)080–12
CSPH*4812A**	0.99	0.92	58ME(B,C)080–12
CAP**3617A**	0.97	0.93	58ME(B,C)080–16
CAP**3621A**	0.97	0.93	58ME(B,C)080–16
CAP**4221A**	0.97	0.93	58ME(B,C)080–16
CAP**4817A**	0.99	0.92	58ME(B,C)080–16
CAP**4821A**	0.99	0.91	58ME(B,C)080–16
CNPH*3617A**	0.96	0.96	58ME(B,C)080–16
CNPH*4221A**	0.97	0.93	58ME(B,C)080–16
CNPH*4321A**	1.01	0.92	58ME(B,C)080–16
CNPH*4821A**	0.99	0.92	58ME(B,C)080–16
CNPV*3617A**	0.96	0.96	58ME(B,C)080–16
CNPV*3621A**	0.96	0.96	58ME(B,C)080–16
CNPV*3717A**	1.00	0.92	58ME(B,C)080–16
CNPV*4217A**	0.98	0.94	58ME(B,C)080–16
CNPV*4221A**	0.97	0.93	58ME(B,C)080–16
CNPV*4821A**	0.99	0.92	58ME(B,C)080–16

COOLING INDOOR MODEL	CAPACITY	POWER	FURNACE MODEL
CSPH*3612A**	0.98	0.94	58ME(B,C)080–16
CSPH*4212A**	0.99	0.92	58ME(B,C)080–16
CSPH*4812A**	0.99	0.92	58ME(B,C)080–16
CAP**3621A**	0.97	0.89	58ME(B,C)100–20
CAP**4221A**	0.97	0.90	58ME(B,C)100–20
CAP**4224A**	0.97	0.90	58ME(B,C)100–20
CAP**4821A**	0.98	0.91	58ME(B,C)100–20
CAP**4824A**	0.98	0.91	58ME(B,C)100–20
CAP**6021A**	0.99	0.91	58ME(B,C)100–20
CNPH*3617A**	0.95	0.92	58ME(B,C)100–20
CNPH*4221A**	0.97	0.89	58ME(B,C)100–20
CNPH*4321A**	1.01	0.90	58ME(B,C)100–20
CNPH*4821A**	0.99	0.91	58ME(B,C)100–20
CNPV*3621A**	0.95	0.92	58ME(B,C)100–20
CNPV*4221A**	0.97	0.89	58ME(B,C)100–20
CNPV*4821A**	0.99	0.91	58ME(B,C)100–20
CNPV*4824A**	0.99	0.91	58ME(B,C)100–20
CSPH*3612A**	0.98	0.91	58ME(B,C)100–20
CSPH*4212A**	0.99	0.91	58ME(B,C)100–20
CSPH*4812A**	0.99	0.91	58ME(B,C)100–20
CAP**3617A**	0.97	0.93	58MEB040–12
CAP**3621A**	0.97	0.93	58MEB040–12
CAP**4221A**	0.97	0.93	58MEB040–12
CAP**4817A**	0.99	0.91	58MEB040–12
CAP**4821A**	0.98	0.91	58MEB040–12
CNPH*3617A**	0.96	0.92	58MEB040–12
CNPH*4221A**	0.97	0.93	58MEB040–12
CNPH*4321A**	1.01	0.92	58MEB040–12
CNPH*4821A**	0.99	0.91	58MEB040–12
CNPV*3617A**	0.96	0.96	58MEB040–12
CNPV*3621A**	0.96	0.92	58MEB040–12
CNPV*3717A**	1.00	0.92	58MEB040–12
CNPV*4217A**	0.98	0.94	58MEB040–12
CNPV*4221A**	0.97	0.93	58MEB040–12
CNPV*4821A**	0.99	0.91	58MEB040–12
CSPH*3612A**	0.98	0.91	58MEB040–12
CSPH*4212A**	0.99	0.91	58MEB040–12
CSPH*4812A**	0.99	0.92	58MEB040–12
CAP**3617A**	0.96	0.92	58MV(B,C)060–14
CAP**3621A**	0.96	0.92	58MV(B,C)060–14
CAP**4221A**	0.97	0.93	58MV(B,C)060–14
CAP**4817A**	0.99	0.91	58MV(B,C)060–14
CAP**4821A**	0.98	0.91	58MV(B,C)060–14
CNPH*3617A**	0.96	0.96	58MV(B,C)060–14
CNPH*4221A**	0.97	0.93	58MV(B,C)060–14
CNPH*4321A**	1.01	0.91	58MV(B,C)060–14
CNPH*4821A**	0.98	0.91	58MV(B,C)060–14
CNPV*3617A**	0.96	0.96	58MV(B,C)060–14
CNPV*3621A**	0.96	0.96	58MV(B,C)060–14
CNPV*3717A**	0.99	0.92	58MV(B,C)060–14
CNPV*4217A**	0.98	0.94	58MV(B,C)060–14
CNPV*4221A**	0.97	0.93	58MV(B,C)060–14
CNPV*4821A**	0.98	0.91	58MV(B,C)060–14
CSPH*3612A**	0.98	0.94	58MV(B,C)060–14
CSPH*4212A**	0.99	0.91	58MV(B,C)060–14
CSPH*4812A**	0.99	0.91	58MV(B,C)060–14
CAP**3621A**	0.96	0.96	58MV(B,C)080–14
CAP**4221A**	0.97	0.93	58MV(B,C)080–14

DETAILED COOLING CAPACITIES# (CONT.)

24ABC636A30 Outdoor Section With CNPV*3717A** Indoor Section**

COOLING INDOOR MODEL	CAPACITY	POWER	FURNACE MODEL
CAP**4224A**	0.97	0.93	58MV(B,C)080–14
CAP**4821A**	0.98	0.94	58MV(B,C)080–14
CAP**4824A**	0.98	0.94	58MV(B,C)080–14
CAP**6021A**	0.99	0.91	58MV(B,C)080–14
CNPH*3617A**	0.95	0.95	58MV(B,C)080–14
CNPH*4221A**	0.97	0.93	58MV(B,C)080–14
CNPH*4321A**	1.00	0.92	58MV(B,C)080–14
CNPH*4821A**	0.98	0.94	58MV(B,C)080–14
CNPV*3621A**	0.95	0.95	58MV(B,C)080–14
CNPV*4221A**	0.97	0.97	58MV(B,C)080–14
CNPV*4821A**	0.98	0.94	58MV(B,C)080–14
CNPV*4824A**	0.98	0.94	58MV(B,C)080–14
CSPH*3612A**	0.98	0.94	58MV(B,C)080–14
CSPH*4212A**	0.98	0.94	58MV(B,C)080–14
CSPH*4812A**	0.99	0.95	58MV(B,C)080–14
CAP**3621A**	0.95	0.92	58MV(B,C)080–20
CAP**4221A**	0.97	0.93	58MV(B,C)080–20
CAP**4224A**	0.97	0.93	58MV(B,C)080–20
CAP**4821A**	0.98	0.94	58MV(B,C)080–20
CAP**4824A**	0.98	0.90	58MV(B,C)080–20
CAP**6021A**	0.99	0.91	58MV(B,C)080–20
CNPH*3617A**	0.95	0.95	58MV(B,C)080–20
CNPH*4221A**	0.97	0.93	58MV(B,C)080–20
CNPH*4321A**	1.00	0.91	58MV(B,C)080–20
CNPH*4821A**	0.98	0.90	58MV(B,C)080–20
CNPV*3621A**	0.95	0.95	58MV(B,C)080–20
CNPV*4221A**	0.97	0.93	58MV(B,C)080–20
CNPV*4821A**	0.98	0.90	58MV(B,C)080–20
CNPV*4824A**	0.98	0.90	58MV(B,C)080–20
CSPH*3612A**	0.98	0.94	58MV(B,C)080–20
CSPH*4212A**	0.98	0.91	58MV(B,C)080–20
CSPH*4812A**	0.98	0.91	58MV(B,C)080–20
CAP**3621A**	0.96	0.92	58MV(B,C)100–20
CAP**4221A**	0.97	0.93	58MV(B,C)100–20
CAP**4224A**	0.97	0.93	58MV(B,C)100–20
CAP**4821A**	0.98	0.90	58MV(B,C)100–20
CAP**4824A**	0.98	0.91	58MV(B,C)100–20
CAP**6021A**	0.99	0.91	58MV(B,C)100–20
CNPH*3617A**	0.96	0.96	58MV(B,C)100–20
CNPH*4221A**	0.97	0.93	58MV(B,C)100–20
CNPH*4321A**	1.01	0.91	58MV(B,C)100–20
CNPH*4821A**	0.98	0.91	58MV(B,C)100–20
CNPV*3621A**	0.96	0.96	58MV(B,C)100–20
CNPV*4221A**	0.97	0.93	58MV(B,C)100–20
CNPV*4821A**	0.98	0.91	58MV(B,C)100–20
CNPV*4824A**	0.98	0.91	58MV(B,C)100–20
CSPH*3612A**	0.98	0.94	58MV(B,C)100–20
CSPH*4212A**	0.98	0.91	58MV(B,C)100–20
CSPH*4812A**	0.99	0.91	58MV(B,C)100–20
CAP**4224A**	0.97	0.89	58MV(B,C)120–20
CAP**4824A**	0.98	0.90	58MV(B,C)120–20
CAP**6024A**	0.99	0.91	58MV(B,C)120–20
CAP**6025A**	0.99	0.91	58MV(B,C)120–20
CNPH*3617A**	0.95	0.92	58MV(B,C)120–20
CNPH*4221A**	0.97	0.93	58MV(B,C)120–20
CNPH*4321A**	1.00	0.91	58MV(B,C)120–20
CNPH*4821A**	0.98	0.91	58MV(B,C)120–20
CNPV*4324A**	1.01	0.91	58MV(B,C)120–20

COOLING INDOOR MODEL	CAPACITY	POWER	FURNACE MODEL
CNPV*4824A**	0.98	0.91	58MV(B,C)120–20
CSPH*3612A**	0.98	0.90	58MV(B,C)120–20
CSPH*4212A**	0.98	0.91	58MV(B,C)120–20
CSPH*4812A**	0.99	0.91	58MV(B,C)120–20
CAP**4224A**	0.96	0.92	58MVB040–14
CAP**4824A**	0.97	0.93	58MVB040–14
CAP**6024A**	0.99	0.91	58MVB040–14
CAP**6025A**	0.99	0.91	58MVB040–14
CNPH*3617A**	0.95	0.95	58MVB040–14
CNPH*4221A**	0.96	0.96	58MVB040–14
CNPH*4321A**	1.00	0.92	58MVB040–14
CNPH*4821A**	0.98	0.94	58MVB040–14
CNPV*4324A**	1.00	0.92	58MVB040–14
CNPV*4824A**	0.98	0.94	58MVB040–14
CSPH*3612A**	0.97	0.93	58MVB040–14
CSPH*4212A**	0.98	0.94	58MVB040–14
CSPH*4812A**	0.98	0.94	58MVB040–14
CAP**3614A**	0.95	0.99	58PH*045–08
CAP**3617A**	0.95	0.95	58PH*045–08
CAP**4817A**	0.98	0.98	58PH*045–08
CNPH*3617A**	0.95	0.95	58PH*045–08
CNPH*4221A**	0.97	0.97	58PH*045–08
CNPH*4321A**	1.01	0.97	58PH*045–08
CNPH*4821A**	0.98	0.98	58PH*045–08
CNPV*3617A**	0.95	0.99	58PH*045–08
CNPV*3717A**	0.99	0.99	58PH*045–08
CNPV*4217A**	0.97	1.01	58PH*045–08
CSPH*3612A**	0.98	0.98	58PH*045–08
CSPH*4212A**	0.98	0.98	58PH*045–08
CSPH*4812A**	0.99	0.99	58PH*045–08
CAP**3617A**	0.96	0.96	58PH*070–16
CAP**3621A**	0.96	0.96	58PH*070–16
CAP**4221A**	0.97	0.97	58PH*070–16
CAP**4817A**	0.98	0.98	58PH*070–16
CAP**4821A**	0.98	0.98	58PH*070–16
CNPH*3617A**	0.95	0.95	58PH*070–16
CNPH*4221A**	0.97	0.97	58PH*070–16
CNPH*4321A**	1.01	0.95	58PH*070–16
CNPH*4821A**	0.98	0.94	58PH*070–16
CNPV*3617A**	0.95	0.95	58PH*070–16
CNPV*3621A**	0.95	0.95	58PH*070–16
CNPV*3717A**	0.99	0.95	58PH*070–16
CNPV*4217A**	0.97	0.97	58PH*070–16
CNPV*4221A**	0.97	0.97	58PH*070–16
CNPV*4821A**	0.98	0.94	58PH*070–16
CSPH*3612A**	0.98	0.98	58PH*070–16
CSPH*4212A**	0.98	0.94	58PH*070–16
CSPH*4812A**	0.99	0.95	58PH*070–16
CAP**3621A**	0.97	0.93	58PH*090–16
CAP**4221A**	0.97	0.90	58PH*090–16
CAP**4224A**	0.98	0.90	58PH*090–16
CAP**4821A**	0.99	0.91	58PH*090–16
CAP**4824A**	0.99	0.91	58PH*090–16
CAP**6021A**	0.99	0.91	58PH*090–16
CNPH*3617A**	0.96	0.92	58PH*090–16
CNPH*4221A**	0.97	0.93	58PH*090–16
CNPH*4321A**	1.01	0.92	58PH*090–16
CNPH*4821A**	0.99	0.91	58PH*090–16

COOLING INDOOR MODEL	CAPACITY	POWER	FURNACE MODEL
CNPV*3621A**	0.96	0.92	58PH*090–16
CNPV*4221A**	0.97	0.93	58PH*090–16
CNPV*4821A**	0.99	0.91	58PH*090–16
CNPV*4824A**	0.99	0.91	58PH*090–16
CSPH*3612A**	0.98	0.91	58PH*090–16
CSPH*4212A**	0.99	0.91	58PH*090–16
CSPH*4812A**	0.99	0.92	58PH*090–16
CAP**3621A**	0.97	0.93	58PH*110–20
CAP**4221A**	0.98	0.90	58PH*110–20
CAP**4224A**	0.98	0.90	58PH*110–20
CAP**4821A**	0.99	0.91	58PH*110–20
CAP**4824A**	0.99	0.92	58PH*110–20
CAP**6021A**	0.99	0.91	58PH*110–20
CNPH*3617A**	0.96	0.92	58PH*110–20
CNPH*4221A**	0.98	0.90	58PH*110–20
CNPH*4321A**	1.02	0.92	58PH*110–20
CNPH*4821A**	0.99	0.92	58PH*110–20
CNPV*3621A**	0.97	0.93	58PH*110–20
CNPV*4221A**	0.98	0.90	58PH*110–20
CNPV*4821A**	0.99	0.92	58PH*110–20
CNPV*4824A**	0.99	0.92	58PH*110–20
CSPH*3612A**	0.99	0.91	58PH*110–20
CSPH*4212A**	0.99	0.92	58PH*110–20
CSPH*4812A**	1.00	0.92	58PH*110–20
CAP**3617A**	0.96	0.92	58UVB060–14
CAP**3617A**	0.96	0.92	58UVB060–14
CAP**3621A**	0.96	0.92	58UVB060–14
CAP**3621A**	0.96	0.92	58UVB060–14
CAP**4221A**	0.97	0.93	58UVB060–14
CAP**4221A**	0.97	0.93	58UVB060–14
CAP**4817A**	0.99	0.91	58UVB060–14
CAP**4817A**	0.99	0.91	58UVB060–14
CAP**4821A**	0.98	0.91	58UVB060–14
CAP**4821A**	0.98	0.91	58UVB060–14
CNPV*3617A**	0.96	0.96	58UVB060–14
CNPV*3617A**	0.96	0.96	58UVB060–14
CNPV*3621A**	0.96	0.96	58UVB060–14
CNPV*3621A**	0.96	0.96	58UVB060–14
CNPV*3717A**	0.99	0.92	58UVB060–14
CNPV*3717A**	0.99	0.92	58UVB060–14
CNPV*4217A**	0.98	0.94	58UVB060–14
CNPV*4217A**	0.98	0.94	58UVB060–14
CNPV*4221A**	0.97	0.93	58UVB060–14
CNPV*4221A**	0.97	0.93	58UVB060–14
CNPV*4821A**	0.98	0.91	58UVB060–14
CNPV*4821A**	0.98	0.91	58UVB060–14
CAP**3621A**	0.96	0.96	58UVB080–14
CAP**3621A**	0.96	0.96	58UVB080–14
CAP**4221A**	0.97	0.93	58UVB080–14
CAP**4221A**	0.97	0.93	58UVB080–14
CAP**4224A**	0.97	0.93	58UVB080–14
CAP**4224A**	0.97	0.93	58UVB080–14
CAP**4821A**	0.98	0.94	58UVB080–14
CAP**4821A**	0.98	0.94	58UVB080–14
CAP**4824A**	0.98	0.94	58UVB080–14
CAP**4824A**	0.98	0.94	58UVB080–14
CAP**6021A**	0.99	0.91	58UVB080–14
CAP**6021A**	0.99	0.91	58UVB080–14

DETAILED COOLING CAPACITIES# (CONT.)

24ABC636A30 Outdoor Section With CNPV*3717A** Indoor Section**

COOLING INDOOR MODEL	CAPACITY	POWER	FURNACE MODEL
CNPV*3621A**	0.95	0.95	58UVB080–14
CNPV*3621A**	0.95	0.95	58UVB080–14
CNPV*4221A**	0.97	0.97	58UVB080–14
CNPV*4221A**	0.97	0.97	58UVB080–14
CNPV*4821A**	0.98	0.94	58UVB080–14
CNPV*4821A**	0.98	0.94	58UVB080–14
CNPV*4824A**	0.98	0.94	58UVB080–14
CNPV*4824A**	0.98	0.94	58UVB080–14
CAP**3621A**	0.95	0.92	58UVB080–20
CAP**3621A**	0.95	0.92	58UVB080–20
CAP**4221A**	0.97	0.93	58UVB080–20
CAP**4221A**	0.97	0.93	58UVB080–20
CAP**4224A**	0.97	0.93	58UVB080–20
CAP**4224A**	0.97	0.93	58UVB080–20
CAP**4821A**	0.98	0.94	58UVB080–20
CAP**4821A**	0.98	0.94	58UVB080–20
CAP**4824A**	0.98	0.90	58UVB080–20
CAP**4824A**	0.98	0.90	58UVB080–20
CAP**6021A**	0.99	0.91	58UVB080–20
CAP**6021A**	0.99	0.91	58UVB080–20
CNPV*3621A**	0.95	0.95	58UVB080–20
CNPV*3621A**	0.95	0.95	58UVB080–20
CNPV*4221A**	0.97	0.93	58UVB080–20
CNPV*4221A**	0.97	0.93	58UVB080–20
CNPV*4821A**	0.98	0.90	58UVB080–20
CNPV*4821A**	0.98	0.90	58UVB080–20
CNPV*4824A**	0.98	0.90	58UVB080–20
CNPV*4824A**	0.98	0.90	58UVB080–20
CAP**3621A**	0.96	0.92	58UVB100–20
CAP**3621A**	0.96	0.92	58UVB100–20
CAP**4221A**	0.97	0.93	58UVB100–20
CAP**4221A**	0.97	0.93	58UVB100–20
CAP**4224A**	0.97	0.93	58UVB100–20
CAP**4224A**	0.97	0.93	58UVB100–20
CAP**4821A**	0.98	0.90	58UVB100–20
CAP**4821A**	0.98	0.90	58UVB100–20
CAP**4824A**	0.98	0.91	58UVB100–20
CAP**4824A**	0.98	0.91	58UVB100–20
CAP**6021A**	0.99	0.91	58UVB100–20
CAP**6021A**	0.99	0.91	58UVB100–20
CNPV*3621A**	0.96	0.96	58UVB100–20
CNPV*3621A**	0.96	0.96	58UVB100–20
CNPV*4221A**	0.97	0.93	58UVB100–20
CNPV*4221A**	0.97	0.93	58UVB100–20
CNPV*4821A**	0.98	0.91	58UVB100–20
CNPV*4821A**	0.98	0.91	58UVB100–20
CNPV*4824A**	0.98	0.91	58UVB100–20
CNPV*4824A**	0.98	0.91	58UVB100–20
CAP**4224A**	0.97	0.89	58UVB120–20
CAP**4224A**	0.97	0.89	58UVB120–20
CAP**4824A**	0.98	0.90	58UVB120–20
CAP**4824A**	0.98	0.90	58UVB120–20
CAP**6024A**	0.99	0.91	58UVB120–20
CAP**6024A**	0.99	0.91	58UVB120–20
CAP**6025A**	0.99	0.91	58UVB120–20
CAP**6025A**	0.99	0.91	58UVB120–20
CNPV*4324A**	1.01	0.91	58UVB120–20
CNPV*4324A**	1.01	0.91	58UVB120–20

COOLING INDOOR MODEL	CAPACITY	POWER	FURNACE MODEL
CNPV*4324A**	1.01	0.91	58UVB120–20
CNPV*4824A**	0.98	0.91	58UVB120–20
CNPV*4824A**	0.98	0.91	58UVB120–20
CAP**3617A**	0.96	0.92	58VLR105–12
CAP**3621A**	0.96	0.92	58VLR105–12
CAP**4221A**	0.97	0.93	58VLR105–12
CAP**4817A**	0.99	0.95	58VLR105–12
CAP**4821A**	0.98	0.94	58VLR105–12
CNPH*3617A**	0.96	0.92	58VLR105–12
CNPH*4221A**	0.97	0.93	58VLR105–12
CNPH*4821A**	0.98	0.91	58VLR105–12
CNPV*3617A**	0.96	0.96	58VLR105–12
CNPV*3621A**	0.96	0.92	58VLR105–12
CNPV*3717A**	0.99	0.92	58VLR105–12
CNPV*4217A**	0.98	0.94	58VLR105–12
CNPV*4221A**	0.97	0.93	58VLR105–12
CNPV*4821A**	0.98	0.91	58VLR105–12
CSPH*3612A**	0.98	0.94	58VLR105–12
CSPH*4212A**	0.99	0.91	58VLR105–12
CSPH*4812A**	0.99	0.91	58VLR105–12
CAP**3621A**	0.96	0.89	58VLR120–20
CAP**4221A**	0.97	0.89	58VLR120–20
CAP**4224A**	0.97	0.89	58VLR120–20
CAP**4821A**	0.98	0.90	58VLR120–20
CAP**4824A**	0.98	0.90	58VLR120–20
CAP**6021A**	0.99	0.91	58VLR120–20
CNPH*3617A**	0.95	0.92	58VLR120–20
CNPH*4221A**	0.97	0.89	58VLR120–20
CNPH*4821A**	0.98	0.91	58VLR120–20
CNPV*3621A**	0.95	0.92	58VLR120–20
CNPV*4221A**	0.97	0.89	58VLR120–20
CNPV*4821A**	0.98	0.91	58VLR120–20
CNPV*4824A**	0.98	0.91	58VLR120–20
CSPH*3612A**	0.98	0.90	58VLR120–20
CSPH*4212A**	0.98	0.91	58VLR120–20
CSPH*4812A**	0.99	0.91	58VLR120–20
CAP**3617A**	0.95	0.91	58VMR105–12
CAP**3621A**	0.95	0.92	58VMR105–12
CAP**4221A**	0.96	0.92	58VMR105–12
CAP**4817A**	0.98	0.90	58VMR105–12
CAP**4821A**	0.97	0.90	58VMR105–12
CNPH*3617A**	0.95	0.91	58VMR105–12
CNPH*4221A**	0.96	0.92	58VMR105–12
CNPH*4821A**	0.97	0.90	58VMR105–12
CNPV*3617A**	0.95	0.91	58VMR105–12
CNPV*3621A**	0.95	0.91	58VMR105–12
CNPV*3717A**	0.98	0.91	58VMR105–12
CNPV*4217A**	0.97	0.93	58VMR105–12
CNPV*4221A**	0.96	0.92	58VMR105–12
CNPV*4821A**	0.97	0.90	58VMR105–12
CSPH*3612A**	0.97	0.93	58VMR105–12
CSPH*4212A**	0.98	0.90	58VMR105–12
CSPH*4812A**	0.98	0.90	58VMR105–12
CAP**3621A**	0.95	0.92	58VMR120–20
CAP**4221A**	0.96	0.89	58VMR120–20
CAP**4224A**	0.96	0.89	58VMR120–20
CAP**4821A**	0.97	0.90	58VMR120–20
CAP**4824A**	0.98	0.90	58VMR120–20

COOLING INDOOR MODEL	CAPACITY	POWER	FURNACE MODEL
CAP**6021A**	0.99	0.91	58VMR120–20
CNPH*3617A**	0.95	0.92	58VMR120–20
CNPH*4221A**	0.96	0.92	58VMR120–20
CNPH*4821A**	0.98	0.90	58VMR120–20
CNPV*3621A**	0.95	0.92	58VMR120–20
CNPV*4221A**	0.96	0.92	58VMR120–20
CNPV*4821A**	0.98	0.90	58VMR120–20
CNPV*4824A**	0.98	0.90	58VMR120–20
CSPH*3612A**	0.98	0.90	58VMR120–20
CSPH*4212A**	0.98	0.90	58VMR120–20
CSPH*4812A**	0.98	0.91	58VMR120–20
CAP**3617A**	0.95	0.92	59*N*A060V17**14
CAP**3619A**	0.95	0.92	59*N*A060V17**14
CAP**3621A**	0.96	0.92	59*N*A060V17**14
CAP**4221A**	0.97	0.93	59*N*A060V17**14
CNPH*3617A**	0.95	0.92	59*N*A060V17**14
CNPH*4221A**	0.97	0.93	59*N*A060V17**14
CNPH*4321A**	0.99	0.93	59*N*A060V17**14
CNPV*3617A**	0.95	0.92	59*N*A060V17**14
CNPV*3621A**	0.95	0.92	59*N*A060V17**14
CNPV*3717A**	0.99	0.93	59*N*A060V17**14
CNPV*4217A**	0.97	0.93	59*N*A060V17**14
CNPV*4221A**	0.97	0.93	59*N*A060V17**14
CSPH*3612A**	0.98	0.92	59*N*A060V17**14
CSPH*4212A**	0.98	0.93	59*N*A060V17**14
CAP**3617A**	0.96	0.91	59*N*A080V17**14
CAP**3619A**	0.96	0.91	59*N*A080V17**14
CAP**3621A**	0.96	0.91	59*N*A080V17**14
CAP**4221A**	0.97	0.91	59*N*A080V17**14
CNPH*3617A**	0.96	0.92	59*N*A080V17**14
CNPH*4221A**	0.97	0.91	59*N*A080V17**14
CNPH*4321A**	0.99	0.92	59*N*A080V17**14
CNPV*3617A**	0.96	0.92	59*N*A080V17**14
CNPV*3621A**	0.96	0.92	59*N*A080V17**14
CNPV*3717A**	0.99	0.92	59*N*A080V17**14
CNPV*4217A**	0.98	0.92	59*N*A080V17**14
CNPV*4221A**	0.97	0.91	59*N*A080V17**14
CSPH*3612A**	0.98	0.92	59*N*A080V17**14
CSPH*4212A**	0.98	0.93	59*N*A080V17**14
CAP**3619A**	0.97	0.91	59*N*A100V21**20
CAP**3621A**	0.97	0.91	59*N*A100V21**20
CAP**4221A**	0.97	0.92	59*N*A100V21**20
CAP**4224A**	0.97	0.92	59*N*A100V21**20
CNPH*3617A**	0.96	0.92	59*N*A100V21**20
CNPH*4221A**	0.97	0.92	59*N*A100V21**20
CNPH*4321A**	1.00	0.92	59*N*A100V21**20
CNPV*3621A**	0.96	0.92	59*N*A100V21**20
CNPV*4221A**	0.97	0.92	59*N*A100V21**20
CNPV*4324A**	1.00	0.92	59*N*A100V21**20
CSPH*3612A**	0.98	0.93	59*N*A100V21**20
CSPH*4212A**	0.99	0.91	59*N*A100V21**20
CAP**4224A**	0.97	0.90	59*N*A120V24**22
CNPH*3617A**	0.96	0.91	59*N*A120V24**22
CNPH*4221A**	0.97	0.92	59*N*A120V24**22
CNPH*4321A**	1.00	0.92	59*N*A120V24**22
CNPV*4324A**	1.00	0.91	59*N*A120V24**22
CSPH*3612A**	0.98	0.91	59*N*A120V24**22
CSPH*4212A**	0.99	0.91	59*N*A120V24**22

DETAILED COOLING CAPACITIES# (CONT.)

24ABC636A30 Outdoor Section With CNPV*3717A** Indoor Section**

COOLING INDOOR MODEL	CAPACITY	POWER	FURNACE MODEL
CAP**3617A**	0.97	0.93	59*P5A060E17**14
CAP**3619A**	0.97	0.93	59*P5A060E17**14
CAP**3621A**	0.97	0.93	59*P5A060E17**14
CAP**4221A**	0.98	0.94	59*P5A060E17**14
CNPH*3617A**	0.97	0.93	59*P5A060E17**14
CNPH*4221A**	0.98	0.94	59*P5A060E17**14
CNPH*4321A**	1.01	0.95	59*P5A060E17**14
CNPV*3617A**	0.97	0.93	59*P5A060E17**14
CNPV*3621A**	0.97	0.93	59*P5A060E17**14
CNPV*3717A**	1.00	0.94	59*P5A060E17**14
CNPV*4217A**	0.98	0.94	59*P5A060E17**14
CNPV*4221A**	0.98	0.94	59*P5A060E17**14
CSPH*3612A**	0.99	0.93	59*P5A060E17**14
CSPH*4212A**	0.99	0.94	59*P5A060E17**14
CAP**3617A**	0.97	0.91	59*P5A080E17**16
CAP**3619A**	0.97	0.91	59*P5A080E17**16
CAP**3621A**	0.97	0.91	59*P5A080E17**16
CAP**4221A**	0.97	0.92	59*P5A080E17**16
CNPH*3617A**	0.96	0.92	59*P5A080E17**16
CNPH*4221A**	0.97	0.92	59*P5A080E17**16
CNPH*4321A**	1.00	0.92	59*P5A080E17**16
CNPV*3617A**	0.96	0.92	59*P5A080E17**16
CNPV*3621A**	0.96	0.92	59*P5A080E17**16
CNPV*3717A**	1.00	0.92	59*P5A080E17**16
CNPV*4217A**	0.98	0.92	59*P5A080E17**16
CNPV*4221A**	0.97	0.92	59*P5A080E17**16
CSPH*3612A**	0.98	0.93	59*P5A080E17**16
CSPH*4212A**	0.99	0.93	59*P5A080E17**16
CAP**3617A**	0.96	0.92	OVLAAB036098
CNPH*3617A**	0.96	0.96	OVLAAB036098
CNPH*4221A**	0.97	0.97	OVLAAB036098
CNPH*4321A**	0.99	0.95	OVLAAB036098
CNPH*4321A**	0.99	0.95	OVLAAB036098
CNPV*3617A**	0.96	0.96	OVLAAB036098
CNPV*3621A**	0.96	0.96	OVLAAB036098
CNPV*3717A**	0.99	0.95	OVLAAB036098
CNPV*4217A**	0.98	0.94	OVLAAB036098
CNPV*4221A**	0.97	0.97	OVLAAB036098
CSPH*3612A**	0.98	0.94	OVLAAB036098
CSPH*4212A**	0.99	0.95	OVLAAB036098
CAP**3621A**	0.97	0.93	OVLAAB048112
CAP**4221A**	0.98	0.94	OVLAAB048112
CNPH*3617A**	0.97	0.97	OVLAAB048112
CNPH*4221A**	0.98	0.94	OVLAAB048112
CNPH*4321A**	1.01	0.97	OVLAAB048112
CNPH*4321A**	1.01	0.97	OVLAAB048112
CNPV*3621A**	0.97	0.97	OVLAAB048112
CNPV*4221A**	0.98	0.94	OVLAAB048112
CNPV*4324A**	1.01	0.93	OVLAAB048112
CSPH*3612A**	0.99	0.95	OVLAAB048112
CSPH*4212A**	1.00	0.96	OVLAAB048112
CNPH*3617A**	0.99	0.95	OVLAAB060154
CNPH*4221A**	1.00	0.96	OVLAAB060154
CNPH*4321A**	1.03	0.95	OVLAAB060154
CNPH*4321A**	1.03	0.95	OVLAAB060154
CNPV*4324A**	1.01	0.93	OVLAAB060154
CSPH*3612A**	1.01	0.97	OVLAAB060154
CSPH*4212A**	1.01	0.93	OVLAAB060154
CAP**3617A**	0.97	0.93	OVMAAB036098
CNPH*3617A**	0.96	0.96	OVMAAB036098
CNPH*4221A**	0.97	0.97	OVMAAB036098
CNPH*4321A**	1.00	0.96	OVMAAB036098
CNPH*4321A**	1.00	0.96	OVMAAB036098
CNPV*3617A**	0.96	0.96	OVMAAB036098
CNPV*3621A**	0.97	0.97	OVMAAB036098
CNPV*3717A**	1.00	0.96	OVMAAB036098
CNPV*4217A**	0.98	0.94	OVMAAB036098
CNPV*4221A**	0.97	0.97	OVMAAB036098
CSPH*3612A**	0.98	0.94	OVMAAB036098
CSPH*4212A**	0.99	0.95	OVMAAB036098
CAP**3617A**	0.97	0.93	OVMAAB042112
CNPH*3617A**	0.97	0.93	OVMAAB042112
CNPH*4221A**	0.98	0.94	OVMAAB042112
CNPH*4321A**	1.00	0.92	OVMAAB042112
CNPH*4321A**	1.00	0.92	OVMAAB042112
CNPV*3617A**	0.97	0.93	OVMAAB042112
CNPV*3621A**	0.97	0.93	OVMAAB042112
CNPV*3717A**	1.00	0.92	OVMAAB042112
CNPV*4217A**	0.98	0.94	OVMAAB042112
CNPV*4221A**	0.98	0.94	OVMAAB042112
CSPH*3612A**	0.99	0.95	OVMAAB042112
CSPH*4212A**	0.99	0.95	OVMAAB042112

See notes on pg. 78

DETAILED COOLING CAPACITIES# (CONT.)

EVAPORATOR AIR		CONDENSER ENTERING AIR TEMPERATURES °F (°C)																	
		75 (23.9)			85 (29.4)			95 (35)			105 (40.6)			115 (46.1)			125 (51.7)		
CFM	EWB °F (°C)	Capacity MBtuh†		Total System KW**	Capacity MBtuh†		Total System KW**	Capacity MBtuh†		Total System KW**	Capacity MBtuh†		Total System KW**	Capacity MBtuh†		Total System KW**	Capacity MBtuh†		Total System KW**
		Total	Sens‡		Total	Sens‡		Total	Sens‡		Total	Sens‡		Total	Sens‡		Total	Sens‡	
24ABC642A**30 Outdoor Section With CNPV*4324A** Indoor Section																			
1225	72 (22.2)	49.58	24.05	2.77	47.31	23.28	3.07	44.88	22.46	3.42	42.30	21.59	3.80	39.58	20.70	4.23	36.71	19.77	4.70
	67 (19.4)	45.17	29.64	2.75	43.10	28.86	3.05	40.90	28.04	3.38	38.55	27.18	3.76	36.07	26.27	4.19	33.47	25.33	4.66
	63 (17.2)††	41.97	28.52	2.74	40.06	27.75	3.03	38.02	26.93	3.36	35.83	26.06	3.74	33.53	25.16	4.17	31.10	24.21	4.64
	62 (16.7)	41.32	35.16	2.74	39.49	34.36	3.03	37.56	33.49	3.36	35.65	35.65	3.74	33.78	33.78	4.17	31.76	31.76	4.64
	57 (13.9)	40.45	40.45	2.73	38.96	38.96	3.03	37.34	37.34	3.36	35.60	35.60	3.74	33.73	33.73	4.17	31.72	31.72	4.64
1400	72 (22.2)	50.40	25.29	2.85	48.02	24.50	3.15	45.48	23.66	3.49	42.82	22.79	3.87	39.99	21.88	4.30	37.02	20.94	4.77
	67 (19.4)	45.95	31.63	2.82	43.80	30.84	3.12	41.50	30.00	3.46	39.07	29.12	3.84	36.51	28.20	4.26	33.83	27.23	4.74
	63 (17.2)††	42.74	30.38	2.81	40.75	29.59	3.10	38.61	28.75	3.44	36.36	27.87	3.82	33.97	26.94	4.24	31.47	25.96	4.71
	62 (16.7)	42.31	37.80	2.81	40.55	40.55	3.10	38.82	38.82	3.44	36.94	36.94	3.82	34.93	34.93	4.25	32.78	32.78	4.72
	57 (13.9)	42.10	42.10	2.81	40.50	40.50	3.10	38.76	38.76	3.44	36.89	36.89	3.82	34.89	34.89	4.25	32.74	32.74	4.72
1575	72 (22.2)	50.98	26.46	2.92	48.52	25.66	3.22	45.91	24.82	3.56	43.16	23.93	3.95	40.25	23.01	4.37	37.22	22.06	4.85
	67 (19.4)	46.53	33.54	2.90	44.31	32.73	3.19	41.95	31.88	3.53	39.45	30.98	3.91	36.83	30.02	4.34	34.11	29.02	4.81
	63 (17.2)††	43.31	32.15	2.88	41.25	31.35	3.17	39.06	30.49	3.51	36.74	29.58	3.89	34.30	28.62	4.31	31.77	27.60	4.78
	62 (16.7)	43.52	43.52	2.88	41.82	41.82	3.18	39.96	39.96	3.52	37.98	37.98	3.90	35.86	35.86	4.33	33.58	33.58	4.80
	57 (13.9)	43.46	43.46	2.88	41.76	41.76	3.18	39.91	39.91	3.52	37.93	37.93	3.90	35.81	35.81	4.33	33.55	33.55	4.80

COOLING INDOOR MODEL	CAPACITY	POWER	FURNACE MODEL
*CNPV*4324A**	1.00	1.00	
CAP**4221A**	0.96	1.01	
CAP**4224A**	0.96	1.01	
CAP**4817A**	0.99	0.99	
CAP**4821A**	0.98	0.98	
CAP**4823A**	0.98	0.98	
CAP**4824A**	0.98	0.98	
CAP**6021A**	1.00	1.00	
CAP**6024A**	1.00	1.00	
CAP**6025A**	1.00	1.00	
CNPF*4818A**	0.98	0.98	
CNPH*4221A**	0.96	0.96	
CNPH*4321A**	1.00	1.00	
CNPH*4821A**	0.99	0.99	
CNPH*6024A**	1.00	1.00	
CNPV*4217A**	0.98	0.98	
CNPV*4221A**	0.96	0.96	
CNPV*4821A**	0.99	0.99	
CNPV*4824A**	0.99	0.99	
CNPV*6024A**	1.00	1.00	
CSPH*4212A**	0.99	0.99	
CSPH*4812A**	0.99	0.99	
CSPH*6012A**	1.00	1.00	
FB4CNF042	0.99	0.95	
FB4CNF042	0.99	0.95	
FB4CNF048	0.99	0.91	
FB4CNF048	1.00	0.96	
FE4AN(B,F)003	0.96	0.89	
FE4AN(B,F)005	0.99	0.91	
FE4ANB006	1.00	0.92	
FE5ANB004	1.00	0.92	
FV4BN(B,F)003	0.96	0.91	
FV4BN(B,F)005	0.99	0.90	
FV4BNB006	1.00	0.88	
FV4CN(B,F)003	0.96	0.89	
FV4CN(B,F)005	0.99	0.91	
FV4CNB006	1.00	0.92	

COOLING INDOOR MODEL	CAPACITY	POWER	FURNACE MODEL
FX4CN(B,F)042	0.99	0.95	
FX4CN(B,F)048	1.00	0.92	
FX4CN(B,F)060	1.00	0.98	
FX4DN(B,F)043	0.99	0.95	
FX4DN(B,F)049	1.01	0.93	
FY4ANB060	1.00	1.00	
FY4ANF042	0.98	1.00	
FY4ANF048	0.99	0.99	
FY5BNF042	0.98	0.94	
FY5BNF042	0.99	0.99	
FY5BNF048	1.00	0.96	
FY5BNF048	1.00	1.00	
CAP**4817A**	0.98	0.94	58CV(A,X)070–12
CNPH*4221A**	0.95	0.91	58CV(A,X)070–12
CNPH*4321A**	0.98	0.94	58CV(A,X)070–12
CNPH*4821A**	0.98	0.94	58CV(A,X)070–12
CNPH*6024A**	1.00	1.00	58CV(A,X)070–12
CNPV*4217A**	0.96	0.93	58CV(A,X)070–12
CSPH*4212A**	0.98	0.94	58CV(A,X)070–12
CSPH*4812A**	0.98	0.94	58CV(A,X)070–12
CSPH*6012A**	0.99	0.91	58CV(A,X)070–12
CAP**4221A**	0.95	0.88	58CV(A,X)090–16
CAP**4817A**	0.98	0.90	58CV(A,X)090–16
CAP**4821A**	0.98	0.90	58CV(A,X)090–16
CAP**6021A**	0.99	0.91	58CV(A,X)090–16
CNPH*4221A**	0.96	0.93	58CV(A,X)090–16
CNPH*4321A**	0.99	0.91	58CV(A,X)090–16
CNPH*4821A**	0.98	0.90	58CV(A,X)090–16
CNPH*6024A**	1.00	1.00	58CV(A,X)090–16
CNPV*4217A**	0.96	0.93	58CV(A,X)090–16
CNPV*4221A**	0.96	0.93	58CV(A,X)090–16
CNPV*4821A**	0.98	0.90	58CV(A,X)090–16
CSPH*4212A**	0.98	0.90	58CV(A,X)090–16
CSPH*4812A**	0.98	0.90	58CV(A,X)090–16
CSPH*6012A**	0.99	0.91	58CV(A,X)090–16
CAP**4221A**	0.96	0.89	58CV(A,X)110–20
CAP**4224A**	0.96	0.89	58CV(A,X)110–20

COOLING INDOOR MODEL	CAPACITY	POWER	FURNACE MODEL
CAP**4821A**	0.98	0.90	58CV(A,X)110–20
CAP**4824A**	0.98	0.90	58CV(A,X)110–20
CAP**6021A**	0.99	0.91	58CV(A,X)110–20
CAP**6024A**	0.99	0.91	58CV(A,X)110–20
CNPH*4221A**	0.96	0.93	58CV(A,X)110–20
CNPH*4321A**	0.99	0.91	58CV(A,X)110–20
CNPH*4821A**	0.98	0.90	58CV(A,X)110–20
CNPH*6024A**	1.00	1.00	58CV(A,X)110–20
CNPV*4221A**	0.96	0.93	58CV(A,X)110–20
CNPV*4324A**	0.99	0.91	58CV(A,X)110–20
CNPV*4821A**	0.98	0.90	58CV(A,X)110–20
CNPV*4824A**	0.98	0.90	58CV(A,X)110–20
CNPV*6024A**	0.99	0.91	58CV(A,X)110–20
CSPH*4212A**	0.98	0.90	58CV(A,X)110–20
CSPH*4812A**	0.99	0.91	58CV(A,X)110–20
CSPH*6012A**	1.00	0.92	58CV(A,X)110–20
CAP**4224A**	0.96	0.89	58CV(A,X)135–22
CAP**4824A**	0.98	0.90	58CV(A,X)135–22
CAP**6024A**	0.99	0.91	58CV(A,X)135–22
CNPH*4221A**	0.96	0.89	58CV(A,X)135–22
CNPH*4321A**	0.99	0.91	58CV(A,X)135–22
CNPH*4821A**	0.98	0.90	58CV(A,X)135–22
CNPH*6024A**	1.00	1.00	58CV(A,X)135–22
CNPV*4324A**	0.99	0.91	58CV(A,X)135–22
CNPV*4824A**	0.98	0.90	58CV(A,X)135–22
CNPV*6024A**	0.99	0.91	58CV(A,X)135–22
CSPH*4212A**	0.98	0.90	58CV(A,X)135–22
CSPH*4812A**	0.99	0.91	58CV(A,X)135–22
CSPH*6012A**	1.00	0.92	58CV(A,X)135–22
CAP**4224A**	0.96	0.89	58CV(A,X)155–22
CAP**4824A**	0.98	0.90	58CV(A,X)155–22
CAP**6024A**	0.99	0.91	58CV(A,X)155–22
CNPH*4221A**	0.96	0.89	58CV(A,X)155–22
CNPH*4321A**	0.99	0.91	58CV(A,X)155–22
CNPH*4821A**	0.98	0.90	58CV(A,X)155–22
CNPH*6024A**	1.00	1.00	58CV(A,X)155–22
CNPV*4324A**	0.99	0.91	58CV(A,X)155–22

DETAILED COOLING CAPACITIES# (CONT.)

24ABC642A30 Outdoor Section With CNPV*4324A** Indoor Section**

COOLING INDOOR MODEL	CAPACITY	POWER	FURNACE MODEL
CNPV*4824A**	0.98	0.90	58CV(A,X)155–22
CNPV*6024A**	0.99	0.91	58CV(A,X)155–22
CSPH*4212A**	0.98	0.90	58CV(A,X)155–22
CSPH*4812A**	0.99	0.91	58CV(A,X)155–22
CSPH*6012A**	1.00	0.92	58CV(A,X)155–22
CNPH*4221A**	0.96	0.96	58HDV060––12
CNPH*4321A**	1.00	0.96	58HDV060––12
CNPH*4821A**	0.99	0.99	58HDV060––12
CNPV*4217A**	0.96	0.96	58HDV060––12
CNPV*4221A**	0.96	0.96	58HDV060––12
CNPV*4821A**	0.99	0.99	58HDV060––12
CAP**4823A**	0.98	0.94	58HDV080––20
CAP**6025A**	1.00	0.92	58HDV080––20
CNPH*4221A**	0.96	0.96	58HDV080––20
CNPH*4321A**	1.00	0.96	58HDV080––20
CNPH*4821A**	0.99	0.95	58HDV080––20
CNPV*4221A**	0.96	0.96	58HDV080––20
CNPV*4324A**	1.00	0.96	58HDV080––20
CNPV*4821A**	0.99	0.95	58HDV080––20
CNPV*4824A**	0.99	0.95	58HDV080––20
CSPH*4212A**	0.99	0.95	58HDV080––20
CSPH*4812A**	0.99	0.95	58HDV080––20
CAP**6025A**	1.00	0.92	58HDV100––20
CNPH*4221A**	0.96	0.93	58HDV100––20
CNPH*4321A**	1.00	0.96	58HDV100––20
CNPH*4821A**	0.99	0.95	58HDV100––20
CNPV*4324A**	1.00	0.92	58HDV100––20
CNPV*4824A**	0.99	0.95	58HDV100––20
CSPH*4212A**	0.99	0.91	58HDV100––20
CSPH*4812A**	0.99	0.91	58HDV100––20
CAP**4221A**	0.96	0.93	58ME(B,C)060–12
CAP**4817A**	0.99	0.91	58ME(B,C)060–12
CAP**4821A**	0.98	0.94	58ME(B,C)060–12
CAP**6021A**	1.00	0.92	58ME(B,C)060–12
CNPH*4221A**	0.96	0.93	58ME(B,C)060–12
CNPH*4321A**	1.00	0.92	58ME(B,C)060–12
CNPH*4821A**	0.99	0.95	58ME(B,C)060–12
CNPH*6024A**	1.00	1.00	58ME(B,C)060–12
CNPV*4217A**	0.98	0.94	58ME(B,C)060–12
CNPV*4221A**	0.96	0.93	58ME(B,C)060–12
CNPV*4821A**	0.99	0.91	58ME(B,C)060–12
CSPH*4212A**	0.99	0.95	58ME(B,C)060–12
CSPH*4812A**	0.99	0.91	58ME(B,C)060–12
CSPH*6012A**	1.00	0.92	58ME(B,C)060–12
CAP**4221A**	0.96	0.93	58ME(B,C)080–12
CAP**4817A**	0.99	0.91	58ME(B,C)080–12
CAP**4821A**	0.98	0.94	58ME(B,C)080–12
CAP**6021A**	1.00	0.92	58ME(B,C)080–12
CNPH*4221A**	0.96	0.93	58ME(B,C)080–12
CNPH*4321A**	1.00	0.92	58ME(B,C)080–12
CNPH*4821A**	0.99	0.91	58ME(B,C)080–12
CNPH*6024A**	1.00	1.00	58ME(B,C)080–12
CNPV*4217A**	0.98	0.94	58ME(B,C)080–12
CNPV*4221A**	0.96	0.93	58ME(B,C)080–12
CNPV*4821A**	0.99	0.91	58ME(B,C)080–12
CSPH*4212A**	0.99	0.91	58ME(B,C)080–12
CSPH*4812A**	0.99	0.91	58ME(B,C)080–12
CSPH*6012A**	1.00	0.92	58ME(B,C)080–12

COOLING INDOOR MODEL	CAPACITY	POWER	FURNACE MODEL
CAP**4221A**	0.96	0.93	58ME(B,C)080–16
CAP**4817A**	0.98	0.90	58ME(B,C)080–16
CAP**4821A**	0.98	0.94	58ME(B,C)080–16
CAP**6021A**	0.99	0.91	58ME(B,C)080–16
CNPH*4221A**	0.96	0.93	58ME(B,C)080–16
CNPH*4321A**	0.99	0.91	58ME(B,C)080–16
CNPH*4821A**	0.98	0.90	58ME(B,C)080–16
CNPH*6024A**	1.00	1.00	58ME(B,C)080–16
CNPV*4217A**	0.96	0.93	58ME(B,C)080–16
CNPV*4221A**	0.96	0.93	58ME(B,C)080–16
CNPV*4821A**	0.98	0.90	58ME(B,C)080–16
CSPH*4212A**	0.98	0.90	58ME(B,C)080–16
CSPH*4812A**	0.99	0.91	58ME(B,C)080–16
CSPH*6012A**	1.00	0.92	58ME(B,C)080–16
CAP**4221A**	0.96	0.89	58ME(B,C)100–20
CAP**4224A**	0.96	0.89	58ME(B,C)100–20
CAP**4821A**	0.98	0.90	58ME(B,C)100–20
CAP**4824A**	0.98	0.90	58ME(B,C)100–20
CAP**6021A**	1.00	0.92	58ME(B,C)100–20
CAP**6024A**	1.00	0.92	58ME(B,C)100–20
CNPH*4221A**	0.96	0.89	58ME(B,C)100–20
CNPH*4321A**	1.00	0.92	58ME(B,C)100–20
CNPH*4821A**	0.99	0.91	58ME(B,C)100–20
CNPH*6024A**	1.00	1.00	58ME(B,C)100–20
CNPV*4221A**	0.96	0.89	58ME(B,C)100–20
CNPV*4324A**	1.00	0.92	58ME(B,C)100–20
CNPV*4821A**	0.99	0.91	58ME(B,C)100–20
CNPV*4824A**	0.99	0.91	58ME(B,C)100–20
CNPV*6024A**	1.00	0.92	58ME(B,C)100–20
CSPH*4212A**	0.99	0.91	58ME(B,C)100–20
CSPH*4812A**	0.99	0.91	58ME(B,C)100–20
CSPH*6012A**	1.00	0.92	58ME(B,C)100–20
CAP**4224A**	0.96	0.89	58ME(B,C)120–20
CAP**4824A**	0.99	0.91	58ME(B,C)120–20
CAP**6024A**	1.00	0.92	58ME(B,C)120–20
CNPH*4221A**	0.96	0.89	58ME(B,C)120–20
CNPH*4321A**	1.00	0.92	58ME(B,C)120–20
CNPH*4821A**	0.99	0.91	58ME(B,C)120–20
CNPH*6024A**	1.00	1.00	58ME(B,C)120–20
CNPV*4324A**	1.00	0.92	58ME(B,C)120–20
CNPV*4824A**	0.99	0.91	58ME(B,C)120–20
CNPV*6024A**	1.00	0.92	58ME(B,C)120–20
CSPH*4212A**	0.99	0.91	58ME(B,C)120–20
CSPH*4812A**	0.99	0.91	58ME(B,C)120–20
CSPH*6012A**	1.00	0.92	58ME(B,C)120–20
CAP**4221A**	0.96	0.93	58MEB040–12
CAP**4817A**	0.99	0.91	58MEB040–12
CAP**4821A**	0.98	0.94	58MEB040–12
CAP**6021A**	1.00	0.92	58MEB040–12
CNPH*4221A**	0.96	0.93	58MEB040–12
CNPH*4321A**	1.00	0.92	58MEB040–12
CNPH*4821A**	0.99	0.91	58MEB040–12
CNPH*6024A**	1.00	1.00	58MEB040–12
CNPV*4217A**	0.98	0.94	58MEB040–12
CNPV*4221A**	0.96	0.93	58MEB040–12
CNPV*4821A**	0.99	0.91	58MEB040–12
CSPH*4212A**	0.99	0.91	58MEB040–12
CSPH*4812A**	0.99	0.91	58MEB040–12

COOLING INDOOR MODEL	CAPACITY	POWER	FURNACE MODEL
CSPH*6012A**	1.00	0.92	58MEB040–12
CAP**4221A**	0.96	0.93	58MV(B,C)060–14
CAP**4817A**	0.99	0.91	58MV(B,C)060–14
CAP**4821A**	0.98	0.94	58MV(B,C)060–14
CAP**6021A**	0.99	0.91	58MV(B,C)060–14
CNPH*4221A**	0.96	0.93	58MV(B,C)060–14
CNPH*4321A**	0.99	0.91	58MV(B,C)060–14
CNPH*4821A**	0.98	0.90	58MV(B,C)060–14
CNPH*6024A**	1.00	1.00	58MV(B,C)060–14
CNPV*4217A**	0.98	0.94	58MV(B,C)060–14
CNPV*4221A**	0.96	0.93	58MV(B,C)060–14
CNPV*4821A**	0.98	0.90	58MV(B,C)060–14
CSPH*4212A**	0.99	0.91	58MV(B,C)060–14
CSPH*4812A**	0.99	0.91	58MV(B,C)060–14
CSPH*6012A**	1.00	0.92	58MV(B,C)060–14
CAP**4221A**	0.95	0.91	58MV(B,C)080–14
CAP**4224A**	0.95	0.91	58MV(B,C)080–14
CAP**4821A**	0.96	0.93	58MV(B,C)080–14
CAP**4824A**	0.96	0.93	58MV(B,C)080–14
CAP**6021A**	0.99	0.95	58MV(B,C)080–14
CAP**6024A**	0.99	0.91	58MV(B,C)080–14
CNPH*4221A**	0.95	0.95	58MV(B,C)080–14
CNPH*4321A**	0.99	0.95	58MV(B,C)080–14
CNPH*4821A**	0.98	0.94	58MV(B,C)080–14
CNPH*6024A**	1.00	1.00	58MV(B,C)080–14
CNPV*4221A**	0.95	0.95	58MV(B,C)080–14
CNPV*4324A**	0.99	0.91	58MV(B,C)080–14
CNPV*4821A**	0.98	0.94	58MV(B,C)080–14
CNPV*4824A**	0.98	0.94	58MV(B,C)080–14
CNPV*6024A**	0.99	0.91	58MV(B,C)080–14
CSPH*4212A**	0.98	0.94	58MV(B,C)080–14
CSPH*4812A**	0.98	0.94	58MV(B,C)080–14
CSPH*6012A**	0.99	0.91	58MV(B,C)080–14
CAP**4221A**	0.95	0.91	58MV(B,C)080–20
CAP**4224A**	0.95	0.91	58MV(B,C)080–20
CAP**4821A**	0.98	0.94	58MV(B,C)080–20
CAP**4824A**	0.98	0.94	58MV(B,C)080–20
CAP**6021A**	0.99	0.91	58MV(B,C)080–20
CAP**6024A**	0.99	0.91	58MV(B,C)080–20
CNPH*4221A**	0.95	0.91	58MV(B,C)080–20
CNPH*4321A**	0.99	0.91	58MV(B,C)080–20
CNPH*4821A**	0.98	0.94	58MV(B,C)080–20
CNPH*6024A**	1.00	1.00	58MV(B,C)080–20
CNPV*4221A**	0.95	0.91	58MV(B,C)080–20
CNPV*4324A**	0.99	0.91	58MV(B,C)080–20
CNPV*4821A**	0.98	0.90	58MV(B,C)080–20
CNPV*4824A**	0.98	0.90	58MV(B,C)080–20
CNPV*6024A**	0.99	0.91	58MV(B,C)080–20
CSPH*4212A**	0.98	0.94	58MV(B,C)080–20
CSPH*4812A**	0.98	0.94	58MV(B,C)080–20
CSPH*6012A**	0.99	0.91	58MV(B,C)080–20
CAP**4221A**	0.95	0.91	58MV(B,C)100–20
CAP**4224A**	0.95	0.91	58MV(B,C)100–20
CAP**4821A**	0.96	0.93	58MV(B,C)100–20
CAP**4824A**	0.96	0.89	58MV(B,C)100–20
CAP**6021A**	0.98	0.90	58MV(B,C)100–20
CAP**6024A**	0.98	0.90	58MV(B,C)100–20
CNPH*4221A**	0.95	0.91	58MV(B,C)100–20

DETAILED COOLING CAPACITIES# (CONT.)

24ABC642A30 Outdoor Section With CNPV*4324A** Indoor Section**

COOLING INDOOR MODEL	CAPACITY	POWER	FURNACE MODEL
CNPH*4321A**	0.98	0.90	58MV(B,C)100–20
CNPH*4821A**	0.96	0.89	58MV(B,C)100–20
CNPH*6024A**	0.99	0.99	58MV(B,C)100–20
CNPV*4221A**	0.95	0.91	58MV(B,C)100–20
CNPV*4324A**	0.98	0.90	58MV(B,C)100–20
CNPV*4821A**	0.96	0.89	58MV(B,C)100–20
CNPV*4824A**	0.96	0.89	58MV(B,C)100–20
CNPV*6024A**	0.98	0.90	58MV(B,C)100–20
CSPH*4212A**	0.98	0.90	58MV(B,C)100–20
CSPH*4812A**	0.98	0.90	58MV(B,C)100–20
CSPH*6012A**	0.99	0.91	58MV(B,C)100–20
CAP**4224A**	0.95	0.88	58MV(B,C)120–20
CAP**4824A**	0.98	0.90	58MV(B,C)120–20
CAP**6024A**	0.99	0.91	58MV(B,C)120–20
CNPH*4221A**	0.96	0.93	58MV(B,C)120–20
CNPH*4321A**	0.99	0.91	58MV(B,C)120–20
CNPH*4821A**	0.98	0.90	58MV(B,C)120–20
CNPH*6024A**	1.00	1.00	58MV(B,C)120–20
CNPV*4324A**	0.99	0.91	58MV(B,C)120–20
CNPV*4824A**	0.98	0.90	58MV(B,C)120–20
CNPV*6024A**	0.99	0.91	58MV(B,C)120–20
CSPH*4212A**	0.98	0.90	58MV(B,C)120–20
CSPH*4812A**	0.98	0.90	58MV(B,C)120–20
CSPH*6012A**	0.99	0.91	58MV(B,C)120–20
CAP**4224A**	0.95	0.91	58MVB040–14
CAP**4824A**	0.96	0.93	58MVB040–14
CAP**6024A**	0.98	0.90	58MVB040–14
CNPH*4221A**	0.95	0.91	58MVB040–14
CNPH*4321A**	0.98	0.94	58MVB040–14
CNPH*4821A**	0.96	0.93	58MVB040–14
CNPH*6024A**	0.99	0.99	58MVB040–14
CNPV*4324A**	0.98	0.90	58MVB040–14
CNPV*4824A**	0.96	0.93	58MVB040–14
CNPV*6024A**	0.98	0.90	58MVB040–14
CSPH*4212A**	0.98	0.94	58MVB040–14
CSPH*4812A**	0.98	0.94	58MVB040–14
CSPH*6012A**	0.99	0.91	58MVB040–14
CAP**4221A**	0.95	0.95	58PH*070–16
CAP**4817A**	0.98	0.98	58PH*070–16
CAP**4821A**	0.98	0.98	58PH*070–16
CAP**6021A**	0.99	0.95	58PH*070–16
CNPH*4221A**	0.95	0.95	58PH*070–16
CNPH*4321A**	0.99	0.95	58PH*070–16
CNPH*4821A**	0.98	0.98	58PH*070–16
CNPH*6024A**	1.00	1.00	58PH*070–16
CNPV*4217A**	0.96	0.96	58PH*070–16
CNPV*4221A**	0.95	0.95	58PH*070–16
CNPV*4821A**	0.98	0.98	58PH*070–16
CSPH*4212A**	0.98	0.98	58PH*070–16
CSPH*4812A**	0.98	0.94	58PH*070–16
CSPH*6012A**	1.00	0.96	58PH*070–16
CAP**4221A**	0.96	0.89	58PH*090–16
CAP**4224A**	0.96	0.89	58PH*090–16
CAP**4821A**	0.98	0.90	58PH*090–16
CAP**4824A**	0.98	0.90	58PH*090–16
CAP**6021A**	0.99	0.91	58PH*090–16
CAP**6024A**	0.99	0.91	58PH*090–16
CNPH*4221A**	0.96	0.93	58PH*090–16

COOLING INDOOR MODEL	CAPACITY	POWER	FURNACE MODEL
CNPH*4321A**	0.99	0.91	58PH*090–16
CNPH*4821A**	0.98	0.90	58PH*090–16
CNPH*6024A**	1.00	1.00	58PH*090–16
CNPV*4221A**	0.96	0.93	58PH*090–16
CNPV*4324A**	1.00	0.92	58PH*090–16
CNPV*4821A**	0.98	0.90	58PH*090–16
CNPV*4824A**	0.98	0.90	58PH*090–16
CNPV*6024A**	1.00	0.92	58PH*090–16
CSPH*4212A**	0.98	0.90	58PH*090–16
CSPH*4812A**	0.99	0.91	58PH*090–16
CSPH*6012A**	1.00	0.92	58PH*090–16
CAP**4221A**	0.96	0.89	58PH*110–20
CAP**4224A**	0.96	0.89	58PH*110–20
CAP**4821A**	0.98	0.90	58PH*110–20
CAP**4824A**	0.98	0.90	58PH*110–20
CAP**6021A**	1.00	0.92	58PH*110–20
CAP**6024A**	1.00	0.92	58PH*110–20
CNPH*4221A**	0.96	0.89	58PH*110–20
CNPH*4321A**	1.00	0.92	58PH*110–20
CNPH*4821A**	0.99	0.91	58PH*110–20
CNPH*6024A**	1.00	1.00	58PH*110–20
CNPV*4221A**	0.96	0.89	58PH*110–20
CNPV*4324A**	1.00	0.92	58PH*110–20
CNPV*4821A**	0.99	0.91	58PH*110–20
CNPV*4824A**	0.99	0.91	58PH*110–20
CNPV*6024A**	1.00	0.92	58PH*110–20
CSPH*4212A**	0.99	0.91	58PH*110–20
CSPH*4812A**	0.99	0.91	58PH*110–20
CSPH*6012A**	1.00	0.92	58PH*110–20
CAP**4224A**	0.96	0.89	58PH*135–20
CAP**4824A**	0.98	0.90	58PH*135–20
CAP**6024A**	1.00	0.92	58PH*135–20
CNPH*4221A**	0.96	0.93	58PH*135–20
CNPH*4321A**	0.99	0.91	58PH*135–20
CNPH*4821A**	0.99	0.91	58PH*135–20
CNPH*6024A**	1.00	1.00	58PH*135–20
CNPV*4324A**	1.00	0.92	58PH*135–20
CNPV*4824A**	0.99	0.91	58PH*135–20
CNPV*6024A**	1.00	0.92	58PH*135–20
CSPH*4212A**	0.98	0.90	58PH*135–20
CSPH*4812A**	0.99	0.91	58PH*135–20
CSPH*6012A**	1.00	0.92	58PH*135–20
CAP**4221A**	0.96	0.93	58UVB060–14
CAP**4221A**	0.96	0.93	58UVB060–14
CAP**4817A**	0.99	0.91	58UVB060–14
CAP**4817A**	0.99	0.91	58UVB060–14
CAP**4821A**	0.98	0.94	58UVB060–14
CAP**4821A**	0.98	0.94	58UVB060–14
CAP**6021A**	0.99	0.91	58UVB060–14
CAP**6021A**	0.99	0.91	58UVB060–14
CNPV*4217A**	0.98	0.94	58UVB060–14
CNPV*4217A**	0.98	0.94	58UVB060–14
CNPV*4221A**	0.96	0.93	58UVB060–14
CNPV*4221A**	0.96	0.93	58UVB060–14
CNPV*4821A**	0.98	0.90	58UVB060–14
CNPV*4821A**	0.98	0.90	58UVB060–14
CAP**4221A**	0.95	0.91	58UVB080–14
CAP**4221A**	0.95	0.91	58UVB080–14

COOLING INDOOR MODEL	CAPACITY	POWER	FURNACE MODEL
CAP**4224A**	0.95	0.91	58UVB080–14
CAP**4224A**	0.95	0.91	58UVB080–14
CAP**4821A**	0.96	0.93	58UVB080–14
CAP**4821A**	0.96	0.93	58UVB080–14
CAP**4824A**	0.96	0.93	58UVB080–14
CAP**4824A**	0.96	0.93	58UVB080–14
CAP**6021A**	0.99	0.95	58UVB080–14
CAP**6021A**	0.99	0.95	58UVB080–14
CAP**6024A**	0.99	0.91	58UVB080–14
CAP**6024A**	0.99	0.91	58UVB080–14
CNPV*4221A**	0.95	0.95	58UVB080–14
CNPV*4221A**	0.95	0.95	58UVB080–14
CNPV*4324A**	0.99	0.91	58UVB080–14
CNPV*4324A**	0.99	0.91	58UVB080–14
CNPV*4821A**	0.98	0.94	58UVB080–14
CNPV*4821A**	0.98	0.94	58UVB080–14
CNPV*4824A**	0.98	0.94	58UVB080–14
CNPV*4824A**	0.98	0.94	58UVB080–14
CNPV*6024A**	0.99	0.91	58UVB080–14
CNPV*6024A**	0.99	0.91	58UVB080–14
CAP**4221A**	0.95	0.91	58UVB080–20
CAP**4221A**	0.95	0.91	58UVB080–20
CAP**4224A**	0.95	0.91	58UVB080–20
CAP**4224A**	0.95	0.91	58UVB080–20
CAP**4821A**	0.98	0.94	58UVB080–20
CAP**4821A**	0.98	0.94	58UVB080–20
CAP**4824A**	0.98	0.94	58UVB080–20
CAP**4824A**	0.98	0.94	58UVB080–20
CAP**6021A**	0.99	0.91	58UVB080–20
CAP**6021A**	0.99	0.91	58UVB080–20
CAP**6024A**	0.99	0.91	58UVB080–20
CAP**6024A**	0.99	0.91	58UVB080–20
CNPV*4221A**	0.95	0.91	58UVB080–20
CNPV*4221A**	0.95	0.91	58UVB080–20
CNPV*4324A**	0.99	0.91	58UVB080–20
CNPV*4324A**	0.99	0.91	58UVB080–20
CNPV*4821A**	0.98	0.90	58UVB080–20
CNPV*4821A**	0.98	0.90	58UVB080–20
CNPV*4824A**	0.98	0.90	58UVB080–20
CNPV*4824A**	0.98	0.90	58UVB080–20
CNPV*6024A**	0.99	0.91	58UVB080–20
CNPV*6024A**	0.99	0.91	58UVB080–20
CAP**4221A**	0.95	0.91	58UVB100–20
CAP**4221A**	0.95	0.91	58UVB100–20
CAP**4224A**	0.95	0.91	58UVB100–20
CAP**4224A**	0.95	0.91	58UVB100–20
CAP**4821A**	0.96	0.93	58UVB100–20
CAP**4821A**	0.96	0.93	58UVB100–20
CAP**4824A**	0.96	0.89	58UVB100–20
CAP**4824A**	0.96	0.89	58UVB100–20
CAP**6021A**	0.98	0.90	58UVB100–20
CAP**6021A**	0.98	0.90	58UVB100–20
CAP**6024A**	0.98	0.90	58UVB100–20
CAP**6024A**	0.98	0.90	58UVB100–20
CNPV*4221A**	0.95	0.91	58UVB100–20
CNPV*4221A**	0.95	0.91	58UVB100–20
CNPV*4324A**	0.98	0.90	58UVB100–20
CNPV*4324A**	0.98	0.90	58UVB100–20

DETAILED COOLING CAPACITIES# (CONT.)

24ABC642A30 Outdoor Section With CNPV*4324A** Indoor Section**

COOLING INDOOR MODEL	CAPACITY	POWER	FURNACE MODEL
CNPV*4821A**	0.96	0.89	58UVB100–20
CNPV*4821A**	0.96	0.89	58UVB100–20
CNPV*4824A**	0.96	0.89	58UVB100–20
CNPV*4824A**	0.96	0.89	58UVB100–20
CNPV*6024A**	0.98	0.90	58UVB100–20
CNPV*6024A**	0.98	0.90	58UVB100–20
CAP**4224A**	0.95	0.88	58UVB120–20
CAP**4224A**	0.95	0.88	58UVB120–20
CAP**4824A**	0.98	0.90	58UVB120–20
CAP**4824A**	0.98	0.90	58UVB120–20
CAP**6024A**	0.99	0.91	58UVB120–20
CAP**6024A**	0.99	0.91	58UVB120–20
CNPV*4324A**	0.99	0.91	58UVB120–20
CNPV*4324A**	0.99	0.91	58UVB120–20
CNPV*4824A**	0.98	0.90	58UVB120–20
CNPV*4824A**	0.98	0.90	58UVB120–20
CNPV*6024A**	0.99	0.91	58UVB120–20
CNPV*6024A**	0.99	0.91	58UVB120–20
CAP**4221A**	0.95	0.88	58VLR120–20
CAP**4224A**	0.95	0.88	58VLR120–20
CAP**4821A**	0.98	0.90	58VLR120–20
CAP**4824A**	0.98	0.90	58VLR120–20
CAP**6021A**	0.99	0.91	58VLR120–20
CAP**6024A**	0.99	0.91	58VLR120–20
CNPH*4221A**	0.96	0.93	58VLR120–20
CNPH*4321A**	0.99	0.91	58VLR120–20
CNPH*4821A**	0.98	0.90	58VLR120–20
CNPH*6024A**	1.00	1.00	58VLR120–20
CNPV*4221A**	0.96	0.93	58VLR120–20
CNPV*4324A**	0.99	0.91	58VLR120–20
CNPV*4821A**	0.98	0.90	58VLR120–20
CNPV*4824A**	0.98	0.90	58VLR120–20
CNPV*6024A**	0.99	0.91	58VLR120–20
CSPH*4212A**	0.98	0.90	58VLR120–20
CSPH*4812A**	0.98	0.90	58VLR120–20
CSPH*6012A**	0.99	0.91	58VLR120–20
CAP**4221A**	0.95	0.91	58VMR120–20
CAP**4224A**	0.95	0.91	58VMR120–20
CAP**4821A**	0.96	0.89	58VMR120–20
CAP**4824A**	0.96	0.89	58VMR120–20
CAP**6021A**	0.99	0.91	58VMR120–20
CAP**6024A**	0.99	0.91	58VMR120–20
CNPH*4221A**	0.95	0.91	58VMR120–20
CNPH*4321A**	0.99	0.91	58VMR120–20
CNPH*4821A**	0.98	0.90	58VMR120–20
CNPH*6024A**	1.00	1.00	58VMR120–20
CNPV*4221A**	0.95	0.91	58VMR120–20
CNPV*4324A**	0.99	0.91	58VMR120–20
CNPV*4821A**	0.98	0.90	58VMR120–20
CNPV*4824A**	0.98	0.90	58VMR120–20
CNPV*6024A**	0.99	0.91	58VMR120–20
CSPH*4212A**	0.98	0.90	58VMR120–20
CSPH*4812A**	0.98	0.90	58VMR120–20
CSPH*6012A**	0.99	0.91	58VMR120–20
CAP**4221A**	0.94	0.90	59*N*A060V17**14
CAP**4817A**	0.96	0.93	59*N*A060V17**14
CAP**4821A**	0.96	0.93	59*N*A060V17**14
CNPH*4221A**	0.95	0.95	59*N*A060V17**14
CNPH*4321A**	0.98	0.94	59*N*A060V17**14

COOLING INDOOR MODEL	CAPACITY	POWER	FURNACE MODEL
CNPH*4821A**	0.96	0.93	59*N*A060V17**14
CNPV*4217A**	0.95	0.91	59*N*A060V17**14
CNPV*4221A**	0.95	0.95	59*N*A060V17**14
CNPV*4821A**	0.96	0.93	59*N*A060V17**14
CSPH*4212A**	0.96	0.93	59*N*A060V17**14
CSPH*4812A**	0.96	0.93	59*N*A060V17**14
CAP**4221A**	0.95	0.91	59*N*A080V17**14
CAP**4817A**	0.96	0.91	59*N*A080V17**14
CAP**4821A**	0.96	0.93	59*N*A080V17**14
CNPH*4221A**	0.95	0.91	59*N*A080V17**14
CNPH*4321A**	0.98	0.92	59*N*A080V17**14
CNPH*4821A**	0.96	0.91	59*N*A080V17**14
CNPV*4217A**	0.95	0.91	59*N*A080V17**14
CNPV*4221A**	0.95	0.91	59*N*A080V17**14
CNPV*4821A**	0.96	0.91	59*N*A080V17**14
CSPH*4212A**	0.96	0.91	59*N*A080V17**14
CSPH*4812A**	0.98	0.92	59*N*A080V17**14
CAP**4221A**	0.95	0.90	59*N*A100V21**20
CAP**4224A**	0.95	0.90	59*N*A100V21**20
CAP**4821A**	0.96	0.91	59*N*A100V21**20
CAP**4823A**	0.96	0.91	59*N*A100V21**20
CAP**4824A**	0.96	0.91	59*N*A100V21**20
CNPH*4221A**	0.95	0.91	59*N*A100V21**20
CNPH*4321A**	0.98	0.92	59*N*A100V21**20
CNPH*4821A**	0.96	0.91	59*N*A100V21**20
CNPV*4221A**	0.95	0.91	59*N*A100V21**20
CNPV*4324A**	0.98	0.90	59*N*A100V21**20
CNPV*4821A**	0.96	0.91	59*N*A100V21**20
CNPV*4824A**	0.96	0.91	59*N*A100V21**20
CSPH*4212A**	0.98	0.92	59*N*A100V21**20
CSPH*4812A**	0.98	0.92	59*N*A100V21**20
CAP**4224A**	0.95	0.90	59*N*A120V24**22
CAP**4823A**	0.96	0.91	59*N*A120V24**22
CAP**4824A**	0.96	0.89	59*N*A120V24**22
CNPH*4221A**	0.95	0.90	59*N*A120V24**22
CNPH*4321A**	0.98	0.90	59*N*A120V24**22
CNPH*4821A**	0.96	0.89	59*N*A120V24**22
CNPV*4324A**	0.99	0.91	59*N*A120V24**22
CNPV*4824A**	0.96	0.89	59*N*A120V24**22
CSPH*4212A**	0.98	0.90	59*N*A120V24**22
CSPH*4812A**	0.98	0.90	59*N*A120V24**22
CAP**4221A**	0.95	0.95	59*P5A060E17**14
CAP**4817A**	0.98	0.94	59*P5A060E17**14
CAP**4821A**	0.96	0.93	59*P5A060E17**14
CNPH*4221A**	0.95	0.95	59*P5A060E17**14
CNPH*4321A**	0.99	0.95	59*P5A060E17**14
CNPH*4821A**	0.98	0.94	59*P5A060E17**14
CNPV*4217A**	0.96	0.93	59*P5A060E17**14
CNPV*4221A**	0.95	0.95	59*P5A060E17**14
CNPV*4821A**	0.98	0.94	59*P5A060E17**14
CSPH*4212A**	0.98	0.94	59*P5A060E17**14
CSPH*4812A**	0.98	0.94	59*P5A060E17**14
CAP**4221A**	0.96	0.93	59*P5A080E17**16
CAP**4817A**	0.98	0.94	59*P5A080E17**16
CAP**4821A**	0.98	0.94	59*P5A080E17**16
CNPH*4221A**	0.96	0.93	59*P5A080E17**16
CNPH*4321A**	0.99	0.93	59*P5A080E17**16
CNPH*4821A**	0.98	0.94	59*P5A080E17**16
CNPV*4217A**	0.96	0.93	59*P5A080E17**16

COOLING INDOOR MODEL	CAPACITY	POWER	FURNACE MODEL
CNPV*4221A**	0.96	0.93	59*P5A080E17**16
CNPV*4821A**	0.98	0.94	59*P5A080E17**16
CSPH*4212A**	0.98	0.94	59*P5A080E17**16
CSPH*4812A**	0.99	0.95	59*P5A080E17**16
CAP**4221A**	0.95	0.91	59*P5A100E21**16
CAP**4224A**	0.95	0.91	59*P5A100E21**16
CAP**4821A**	0.96	0.91	59*P5A100E21**16
CAP**4823A**	0.96	0.91	59*P5A100E21**16
CAP**4824A**	0.98	0.92	59*P5A100E21**16
CNPH*4221A**	0.95	0.91	59*P5A100E21**16
CNPH*4321A**	0.99	0.93	59*P5A100E21**16
CNPH*4821A**	0.98	0.92	59*P5A100E21**16
CNPV*4221A**	0.95	0.91	59*P5A100E21**16
CNPV*4324A**	0.99	0.93	59*P5A100E21**16
CNPV*4821A**	0.98	0.92	59*P5A100E21**16
CNPV*4824A**	0.98	0.92	59*P5A100E21**16
CSPH*4212A**	0.98	0.92	59*P5A100E21**16
CSPH*4812A**	0.98	0.92	59*P5A100E21**16
CAP**4224A**	0.96	0.91	59*P5A120E24**22
CAP**4823A**	0.98	0.92	59*P5A120E24**22
CAP**4824A**	0.99	0.93	59*P5A120E24**22
CNPH*4221A**	0.96	0.91	59*P5A120E24**22
CNPH*4321A**	1.00	0.92	59*P5A120E24**22
CNPH*4821A**	0.99	0.93	59*P5A120E24**22
CNPV*4324A**	1.00	0.92	59*P5A120E24**22
CNPV*4824A**	0.99	0.93	59*P5A120E24**22
CSPH*4212A**	0.99	0.93	59*P5A120E24**22
CSPH*4812A**	0.99	0.93	59*P5A120E24**22
CAP**4221A**	0.96	0.96	OVLAAB048112
CAP**4821A**	0.98	0.94	OVLAAB048112
CNPH*4221A**	0.96	0.96	OVLAAB048112
CNPH*4321A**	0.99	0.95	OVLAAB048112
CNPH*4821A**	0.98	0.98	OVLAAB048112
CNPV*4221A**	0.96	0.96	OVLAAB048112
CNPV*4324A**	0.99	0.95	OVLAAB048112
CNPV*4821A**	0.98	0.98	OVLAAB048112
CNPV*4824A**	0.98	0.98	OVLAAB048112
CSPH*4212A**	0.98	0.98	OVLAAB048112
CSPH*4812A**	0.99	0.99	OVLAAB048112
CNPH*4221A**	0.98	0.98	OVLAAB060154
CNPH*4321A**	1.01	0.97	OVLAAB060154
CNPH*4821A**	1.00	0.96	OVLAAB060154
CNPV*4324A**	1.01	0.97	OVLAAB060154
CNPV*4824A**	1.00	0.96	OVLAAB060154
CSPH*4212A**	1.00	0.96	OVLAAB060154
CSPH*4812A**	1.00	0.96	OVLAAB060154
CAP**4817A**	0.98	0.94	OVMAAB042112
CNPH*4221A**	0.95	0.95	OVMAAB042112
CNPH*4321A**	0.99	0.95	OVMAAB042112
CNPH*4821A**	0.98	0.94	OVMAAB042112
CNPV*4217A**	0.96	0.96	OVMAAB042112
CNPV*4221A**	0.95	0.95	OVMAAB042112
CNPV*4821A**	0.98	0.94	OVMAAB042112
CSPH*4212A**	0.98	0.94	OVMAAB042112
CSPH*4812A**	0.98	0.94	OVMAAB042112

See notes on pg. 78

DETAILED COOLING CAPACITIES# (CONT.)

EVAPORATOR AIR		CONDENSER ENTERING AIR TEMPERATURES °F (°C)																	
		75 (23.9)			85 (29.4)			95 (35)			105 (40.6)			115 (46.1)			125 (51.7)		
CFM	EWB °F (°C)	Capacity MBtuh†		Total System KW**	Capacity MBtuh†		Total System KW**	Capacity MBtuh†		Total System KW**	Capacity MBtuh†		Total System KW**	Capacity MBtuh†		Total System KW**	Capacity MBtuh†		Total System KW**
		Total	Sens‡		Total	Sens‡		Total	Sens‡		Total	Sens‡		Total	Sens‡		Total	Sens‡	
24ABC648A**31 Outdoor Section With CAP**6024* Indoor Section																			
1400	72 (22.2)	55.71	27.90	2.67	52.91	26.91	3.09	50.01	25.90	3.52	47.00	24.87	3.95	43.85	23.81	4.41	40.51	22.69	4.89
	67 (19.4)	50.48	34.32	2.83	47.96	33.34	3.22	45.37	32.35	3.61	42.67	31.33	4.01	39.85	30.28	4.44	36.84	29.16	4.91
	63 (17.2)††	46.73	32.94	2.93	44.44	31.98	3.29	42.06	31.01	3.66	39.59	30.00	4.05	36.99	28.96	4.46	34.22	27.85	4.92
	62 (16.7)	45.93	40.65	2.94	43.75	39.65	3.30	41.55	41.29	3.66	39.51	39.51	4.04	37.39	37.39	4.46	35.08	35.08	4.91
	57 (13.9)	45.05	45.05	2.96	43.28	43.28	3.31	41.43	41.43	3.66	39.45	39.45	4.04	37.34	37.34	4.46	35.03	35.03	4.91
1600	72 (22.2)	56.66	29.33	2.72	53.70	28.32	3.15	50.67	27.29	3.59	47.54	26.24	4.03	44.26	25.15	4.49	40.81	24.02	4.98
	67 (19.4)	51.35	36.61	2.88	48.71	35.62	3.28	46.00	34.60	3.68	43.20	33.56	4.09	40.27	32.47	4.53	37.17	31.32	5.00
	63 (17.2)††	47.56	35.07	2.99	45.15	34.09	3.36	42.68	33.09	3.74	40.11	32.06	4.13	37.41	30.98	4.55	34.56	29.83	5.01
	62 (16.7)	47.06	46.71	3.00	45.06	45.06	3.36	43.04	43.04	3.73	40.91	40.91	4.12	38.62	38.62	4.54	36.15	36.15	5.00
	57 (13.9)	46.92	46.92	3.00	44.99	44.99	3.36	42.98	42.98	3.73	40.85	40.85	4.12	38.57	38.57	4.54	36.11	36.11	5.00
1800	72 (22.2)	57.33	30.68	2.77	54.27	29.65	3.22	51.13	28.60	3.66	47.88	27.53	4.11	44.52	26.43	4.57	40.96	25.28	5.07
	67 (19.4)	51.99	38.81	2.94	49.25	37.79	3.35	46.46	36.75	3.76	43.57	35.67	4.17	40.57	34.55	4.62	37.43	33.33	5.09
	63 (17.2)††	48.17	37.10	3.06	45.68	36.10	3.44	43.11	35.07	3.82	40.47	34.01	4.21	37.72	32.88	4.64	34.82	31.65	5.10
	62 (16.7)	48.51	48.51	3.04	46.44	46.44	3.41	44.29	44.29	3.79	42.02	42.02	4.19	39.60	39.60	4.62	36.98	36.98	5.09
	57 (13.9)	48.45	48.45	3.04	46.38	46.38	3.42	44.24	44.24	3.79	41.97	41.97	4.19	39.55	39.55	4.62	36.94	36.94	5.09

COOLING INDOOR MODEL	CAPACITY	POWER	FURNACE MODEL
*CAP**6024A**	1.00	1.00	
CAP**4817A**	0.96	0.96	
CAP**4821A**	0.98	1.02	
CAP**4823A**	0.98	1.02	
CAP**4824A**	0.98	1.02	
CAP**6021A**	0.99	0.99	
CAP**6025A**	1.00	1.04	
CNPF*4818A**	0.96	1.00	
CNPH*4821A**	0.98	1.02	
CNPH*6024A**	1.00	1.00	
CNPH*6124A**	1.01	1.01	
CNPV*4821A**	0.98	1.02	
CNPV*4824A**	0.98	1.02	
CNPV*6024A**	1.00	1.00	
CNPV*6124A**	1.01	1.01	
CSPH*4812A**	0.98	0.98	
CSPH*6012A**	1.00	1.00	
FB4CNF048	0.98	0.98	
FB4CNF060	1.00	1.00	
FE4AN(B,F)005	0.99	0.95	
FE4ANB006	1.00	0.96	
FV4BN(B,F)005	0.99	0.92	
FV4BNB006	1.00	0.89	
FV4CN(B,F)005	0.99	0.95	
FV4CNB006	1.00	0.96	
FX4CN(B,F)048	0.99	0.95	
FX4CN(B,F)060	1.01	0.94	
FX4DN(B,F)049	1.01	0.97	
FX4DN(B,F)061	1.02	0.98	
FY4ANB060	1.00	1.00	
FY4ANF048	0.98	1.00	
FY5BNB060	1.00	1.04	
FY5BNF048	1.00	1.00	
CAP**4817A**	0.96	0.96	58CV(A,X)090–16
CAP**4821A**	0.97	0.97	58CV(A,X)090–16
CAP**6021A**	0.98	0.94	58CV(A,X)090–16
CNPH*4821A**	0.97	0.97	58CV(A,X)090–16

COOLING INDOOR MODEL	CAPACITY	POWER	FURNACE MODEL
CNPH*6024A**	0.98	0.98	58CV(A,X)090–16
CNPH*6124A**	0.99	0.99	58CV(A,X)090–16
CNPV*4821A**	0.97	0.97	58CV(A,X)090–16
CSPH*4812A**	0.98	0.98	58CV(A,X)090–16
CSPH*6012A**	0.99	0.95	58CV(A,X)090–16
CAP**4817A**	0.96	0.96	58CV(A,X)110–20
CAP**4821A**	0.97	0.97	58CV(A,X)110–20
CAP**4824A**	0.97	0.97	58CV(A,X)110–20
CAP**6021A**	0.98	0.94	58CV(A,X)110–20
CAP**6024A**	0.99	0.95	58CV(A,X)110–20
CNPH*4821A**	0.97	0.97	58CV(A,X)110–20
CNPH*6024A**	0.99	0.95	58CV(A,X)110–20
CNPH*6124A**	0.99	0.99	58CV(A,X)110–20
CNPV*4821A**	0.97	0.97	58CV(A,X)110–20
CNPV*4824A**	0.97	0.97	58CV(A,X)110–20
CNPV*6024A**	0.99	0.95	58CV(A,X)110–20
CNPV*6124A**	1.00	0.96	58CV(A,X)110–20
CSPH*4812A**	0.98	0.98	58CV(A,X)110–20
CSPH*6012A**	0.99	0.95	58CV(A,X)110–20
CAP**4821A**	0.97	0.97	58CV(A,X)135–22
CAP**4824A**	0.97	0.97	58CV(A,X)135–22
CAP**6021A**	0.98	0.94	58CV(A,X)135–22
CAP**6024A**	0.99	0.95	58CV(A,X)135–22
CNPH*4821A**	0.97	0.93	58CV(A,X)135–22
CNPH*6024A**	0.99	0.95	58CV(A,X)135–22
CNPH*6124A**	1.00	0.96	58CV(A,X)135–22
CNPV*4821A**	0.97	0.97	58CV(A,X)135–22
CNPV*4824A**	0.97	0.93	58CV(A,X)135–22
CNPV*6024A**	0.99	0.95	58CV(A,X)135–22
CNPV*6124A**	1.00	0.96	58CV(A,X)135–22
CSPH*4812A**	0.98	0.98	58CV(A,X)135–22
CSPH*6012A**	0.99	0.95	58CV(A,X)135–22
CAP**4821A**	0.97	0.93	58CV(A,X)155–22
CAP**4824A**	0.97	0.93	58CV(A,X)155–22
CAP**6021A**	0.99	0.95	58CV(A,X)155–22
CAP**6024A**	0.99	0.95	58CV(A,X)155–22
CNPH*4821A**	0.98	0.94	58CV(A,X)155–22

COOLING INDOOR MODEL	CAPACITY	POWER	FURNACE MODEL
CNPH*6024A**	0.99	0.95	58CV(A,X)155–22
CNPH*6124A**	1.00	0.96	58CV(A,X)155–22
CNPV*4821A**	0.98	0.94	58CV(A,X)155–22
CNPV*4824A**	0.98	0.94	58CV(A,X)155–22
CNPV*6024A**	0.99	0.95	58CV(A,X)155–22
CNPV*6124A**	1.01	0.97	58CV(A,X)155–22
CSPH*4812A**	0.98	0.94	58CV(A,X)155–22
CSPH*6012A**	1.00	0.96	58CV(A,X)155–22
CAP**4823A**	0.97	0.97	58HDV080––20
CAP**6025A**	0.99	0.99	58HDV080––20
CNPH*4821A**	0.98	0.98	58HDV080––20
CNPH*6024A**	0.99	0.99	58HDV080––20
CNPH*6124A**	0.99	0.99	58HDV080––20
CNPV*4821A**	0.97	0.98	58HDV080––20
CNPV*4824A**	0.97	0.97	58HDV080––20
CNPV*6024A**	0.99	0.99	58HDV080––20
CNPV*6124A**	1.00	0.96	58HDV080––20
CSPH*4812A**	0.99	0.99	58HDV080––20
CSPH*6012A**	1.00	1.00	58HDV080––20
CAP**4823A**	0.97	0.97	58HDV100––20
CAP**6025A**	0.99	0.95	58HDV100––20
CNPH*4821A**	0.98	0.98	58HDV100––20
CNPH*6024A**	0.99	0.99	58HDV100––20
CNPH*6124A**	0.99	0.99	58HDV100––20
CNPV*4824A**	0.97	0.97	58HDV100––20
CNPV*6024A**	0.99	0.99	58HDV100––20
CNPV*6124A**	1.00	0.96	58HDV100––20
CSPH*4812A**	0.99	0.99	58HDV100––20
CSPH*6012A**	1.00	1.00	58HDV100––20
CAP**4817A**	0.96	0.96	58ME(B,C)080–16
CAP**4821A**	0.97	0.97	58ME(B,C)080–16
CAP**6021A**	0.99	0.99	58ME(B,C)080–16
CNPH*4821A**	0.98	0.98	58ME(B,C)080–16
CNPH*6024A**	0.99	0.99	58ME(B,C)080–16
CNPV*4821A**	0.98	0.98	58ME(B,C)080–16
CSPH*4812A**	0.98	0.98	58ME(B,C)080–16
CSPH*6012A**	1.00	1.00	58ME(B,C)080–16

DETAILED COOLING CAPACITIES# (CONT.)

24ABC648A31 Outdoor Section With CAP**6024* Indoor Section**

COOLING INDOOR MODEL	CAPACITY	POWER	FURNACE MODEL
CAP**4817A**	0.96	0.92	58ME(B,C)100−20
CAP**4821A**	0.97	0.97	58ME(B,C)100−20
CAP**4824A**	0.97	0.97	58ME(B,C)100−20
CAP**6021A**	0.99	0.95	58ME(B,C)100−20
CAP**6024A**	0.99	0.95	58ME(B,C)100−20
CNPH*4821A**	0.98	0.98	58ME(B,C)100−20
CNPH*6024A**	0.99	0.95	58ME(B,C)100−20
CNPV*4821A**	0.98	0.98	58ME(B,C)100−20
CNPV*4824A**	0.98	0.98	58ME(B,C)100−20
CNPV*6024A**	0.99	0.95	58ME(B,C)100−20
CSPH*4812A**	0.98	0.94	58ME(B,C)100−20
CSPH*6012A**	1.00	0.96	58ME(B,C)100−20
CAP**4821A**	0.98	0.94	58ME(B,C)120−20
CAP**4824A**	0.98	0.94	58ME(B,C)120−20
CAP**6021A**	0.99	0.95	58ME(B,C)120−20
CAP**6024A**	0.99	0.95	58ME(B,C)120−20
CNPH*4821A**	0.98	0.94	58ME(B,C)120−20
CNPH*6024A**	1.00	0.96	58ME(B,C)120−20
CNPV*4821A**	0.98	0.94	58ME(B,C)120−20
CNPV*4824A**	0.98	0.94	58ME(B,C)120−20
CNPV*6024A**	1.00	0.96	58ME(B,C)120−20
CSPH*4812A**	0.98	0.94	58ME(B,C)120−20
CSPH*6012A**	1.00	0.96	58ME(B,C)120−20
CNPH*6124A**	1.00	1.00	58MEC080−16
CNPH*6124A**	1.00	0.96	58MEC100−20
CNPV*6124A**	1.01	0.97	58MEC100−20
CNPH*6124A**	1.00	0.96	58MEC120−20
CNPV*6124A**	1.01	0.97	58MEC120−20
CAP**4817A**	0.96	0.96	58MV(B,C)080−20
CAP**4821A**	0.96	0.96	58MV(B,C)080−20
CAP**4824A**	0.96	0.96	58MV(B,C)080−20
CAP**6021A**	0.98	0.94	58MV(B,C)080−20
CAP**6024A**	0.98	0.98	58MV(B,C)080−20
CNPH*4821A**	0.97	0.97	58MV(B,C)080−20
CNPH*6024A**	0.98	0.98	58MV(B,C)080−20
CNPH*6124A**	0.99	0.99	58MV(B,C)080−20
CNPV*4821A**	0.97	0.97	58MV(B,C)080−20
CNPV*4824A**	0.97	0.97	58MV(B,C)080−20
CNPV*6024A**	0.98	0.98	58MV(B,C)080−20
CNPV*6124A**	1.00	1.00	58MV(B,C)080−20
CSPH*4812A**	0.97	0.97	58MV(B,C)080−20
CSPH*6012A**	0.98	0.98	58MV(B,C)080−20
CAP**4817A**	0.96	0.96	58MV(B,C)100−20
CAP**4821A**	0.97	0.97	58MV(B,C)100−20
CAP**4824A**	0.97	0.97	58MV(B,C)100−20
CAP**6021A**	0.98	0.94	58MV(B,C)100−20
CAP**6024A**	0.99	0.99	58MV(B,C)100−20
CNPH*4821A**	0.97	0.97	58MV(B,C)100−20
CNPH*6024A**	0.99	0.99	58MV(B,C)100−20
CNPH*6124A**	0.99	0.99	58MV(B,C)100−20
CNPV*4821A**	0.97	0.97	58MV(B,C)100−20
CNPV*4824A**	0.97	0.97	58MV(B,C)100−20
CNPV*6024A**	0.98	0.98	58MV(B,C)100−20
CNPV*6124A**	1.00	1.00	58MV(B,C)100−20
CSPH*4812A**	0.98	0.98	58MV(B,C)100−20
CSPH*6012A**	0.99	0.99	58MV(B,C)100−20
CAP**4821A**	0.97	0.97	58MV(B,C)120−20
CAP**4824A**	0.97	0.97	58MV(B,C)120−20

COOLING INDOOR MODEL	CAPACITY	POWER	FURNACE MODEL
CAP**6021A**	0.98	0.94	58MV(B,C)120−20
CAP**6024A**	0.99	0.99	58MV(B,C)120−20
CNPH*4821A**	0.97	0.97	58MV(B,C)120−20
CNPH*6024A**	0.99	0.99	58MV(B,C)120−20
CNPH*6124A**	0.99	0.99	58MV(B,C)120−20
CNPV*4821A**	0.97	0.97	58MV(B,C)120−20
CNPV*4824A**	0.97	0.97	58MV(B,C)120−20
CNPV*6024A**	0.99	0.99	58MV(B,C)120−20
CNPV*6124A**	1.00	0.96	58MV(B,C)120−20
CSPH*4812A**	0.98	0.98	58MV(B,C)120−20
CSPH*6012A**	0.99	0.95	58MV(B,C)120−20
CAP**4817A**	0.96	0.96	58PH*090−16
CAP**4821A**	0.97	0.97	58PH*090−16
CAP**4824A**	0.97	0.97	58PH*090−16
CAP**6021A**	0.99	0.95	58PH*090−16
CAP**6024A**	0.99	0.95	58PH*090−16
CNPH*4821A**	0.98	0.98	58PH*090−16
CNPH*6024A**	0.99	0.95	58PH*090−16
CNPH*6124A**	1.00	1.00	58PH*090−16
CNPV*4821A**	0.98	0.98	58PH*090−16
CNPV*4824A**	0.98	0.98	58PH*090−16
CNPV*6024A**	0.99	0.95	58PH*090−16
CNPV*6124A**	1.01	0.97	58PH*090−16
CSPH*4812A**	0.98	0.98	58PH*090−16
CSPH*6012A**	1.00	0.96	58PH*090−16
CAP**4817A**	0.96	0.92	58PH*110−20
CAP**4821A**	0.97	0.93	58PH*110−20
CAP**4824A**	0.97	0.97	58PH*110−20
CAP**6021A**	0.99	0.95	58PH*110−20
CAP**6024A**	0.99	0.95	58PH*110−20
CNPH*4821A**	0.98	0.94	58PH*110−20
CNPH*6024A**	0.99	0.95	58PH*110−20
CNPH*6124A**	1.00	0.96	58PH*110−20
CNPV*4821A**	0.98	0.94	58PH*110−20
CNPV*4824A**	0.98	0.94	58PH*110−20
CNPV*6024A**	0.99	0.95	58PH*110−20
CNPV*6124A**	1.01	0.97	58PH*110−20
CSPH*4812A**	0.98	0.94	58PH*110−20
CSPH*6012A**	1.00	0.96	58PH*110−20
CAP**4821A**	0.97	0.97	58PH*135−20
CAP**4824A**	0.97	0.97	58PH*135−20
CAP**6021A**	0.99	0.95	58PH*135−20
CAP**6024A**	0.99	0.95	58PH*135−20
CNPH*4821A**	0.98	0.98	58PH*135−20
CNPH*6024A**	0.99	0.95	58PH*135−20
CNPH*6124A**	1.00	0.96	58PH*135−20
CNPV*4821A**	0.98	0.98	58PH*135−20
CNPV*4824A**	0.98	0.98	58PH*135−20
CNPV*6024A**	0.99	0.95	58PH*135−20
CNPV*6124A**	1.01	0.97	58PH*135−20
CSPH*4812A**	0.98	0.98	58PH*135−20
CSPH*6012A**	1.00	0.96	58PH*135−20
CAP**4817A**	0.96	0.96	58UVB080−20
CAP**4817A**	0.96	0.96	58UVB080−20
CAP**4821A**	0.96	0.96	58UVB080−20
CAP**4821A**	0.96	0.96	58UVB080−20
CAP**4824A**	0.96	0.96	58UVB080−20
CAP**4824A**	0.96	0.96	58UVB080−20

COOLING INDOOR MODEL	CAPACITY	POWER	FURNACE MODEL
CAP**6021A**	0.98	0.94	58UVB080−20
CAP**6021A**	0.98	0.94	58UVB080−20
CAP**6024A**	0.98	0.98	58UVB080−20
CAP**6024A**	0.98	0.98	58UVB080−20
CNPV*4821A**	0.97	0.97	58UVB080−20
CNPV*4821A**	0.97	0.97	58UVB080−20
CNPV*4824A**	0.97	0.97	58UVB080−20
CNPV*4824A**	0.97	0.97	58UVB080−20
CNPV*6024A**	0.98	0.98	58UVB080−20
CNPV*6024A**	0.98	0.98	58UVB080−20
CNPV*6124A**	1.00	1.00	58UVB080−20
CAP**4817A**	0.96	0.96	58UVB100−20
CAP**4817A**	0.96	0.96	58UVB100−20
CAP**4821A**	0.97	0.97	58UVB100−20
CAP**4821A**	0.97	0.97	58UVB100−20
CAP**4824A**	0.97	0.97	58UVB100−20
CAP**4824A**	0.97	0.97	58UVB100−20
CAP**6021A**	0.98	0.94	58UVB100−20
CAP**6021A**	0.98	0.94	58UVB100−20
CAP**6024A**	0.99	0.99	58UVB100−20
CAP**6024A**	0.99	0.99	58UVB100−20
CNPV*4821A**	0.97	0.97	58UVB100−20
CNPV*4821A**	0.97	0.97	58UVB100−20
CNPV*4824A**	0.97	0.97	58UVB100−20
CNPV*4824A**	0.97	0.97	58UVB100−20
CNPV*6024A**	0.98	0.98	58UVB100−20
CNPV*6024A**	0.98	0.98	58UVB100−20
CNPV*6124A**	1.00	1.00	58UVB100−20
CAP**4821A**	0.97	0.97	58UVB120−20
CAP**4821A**	0.97	0.97	58UVB120−20
CAP**4824A**	0.97	0.97	58UVB120−20
CAP**4824A**	0.97	0.97	58UVB120−20
CAP**6021A**	0.98	0.94	58UVB120−20
CAP**6021A**	0.98	0.94	58UVB120−20
CAP**6024A**	0.99	0.99	58UVB120−20
CAP**6024A**	0.99	0.99	58UVB120−20
CNPV*4821A**	0.97	0.97	58UVB120−20
CNPV*4821A**	0.97	0.97	58UVB120−20
CNPV*4824A**	0.97	0.97	58UVB120−20
CNPV*4824A**	0.97	0.97	58UVB120−20
CNPV*6024A**	0.99	0.99	58UVB120−20
CNPV*6024A**	0.99	0.99	58UVB120−20
CNPV*6124A**	1.00	0.96	58UVB120−20
CAP**4817A**	0.97	0.95	58VLR120−20
CAP**4821A**	0.97	0.97	58VLR120−20
CAP**4824A**	0.97	0.97	58VLR120−20
CAP**6021A**	0.98	0.94	58VLR120−20
CAP**6024A**	0.98	0.94	58VLR120−20
CNPH*4821A**	0.98	0.98	58VLR120−20
CNPH*6024A**	0.98	0.94	58VLR120−20
CNPH*6124A**	0.99	0.99	58VLR120−20
CNPV*4821A**	0.98	0.98	58VLR120−20
CNPV*4824A**	0.98	0.98	58VLR120−20
CNPV*6024A**	0.98	0.94	58VLR120−20
CNPV*6124A**	1.00	0.96	58VLR120−20
CSPH*4812A**	0.98	0.98	58VLR120−20
CSPH*6012A**	0.98	0.94	58VLR120−20
CAP**4817A**	0.97	0.95	58VMR120−20

DETAILED COOLING CAPACITIES# (CONT.)

24ABC648A31 Outdoor Section With CAP**6024* Indoor Section**

COOLING INDOOR MODEL	CAPACITY	POWER	FURNACE MODEL
CAP**4821A**	0.97	0.97	58VMR120–20
CAP**4824A**	0.97	0.97	58VMR120–20
CAP**6021A**	0.99	0.99	58VMR120–20
CAP**6024A**	0.99	0.99	58VMR120–20
CNPH*4821A**	0.98	0.98	58VMR120–20
CNPH*6024A**	0.99	0.99	58VMR120–20
CNPH*6124A**	0.99	0.99	58VMR120–20
CNPV*4821A**	0.98	0.98	58VMR120–20
CNPV*4824A**	0.98	0.98	58VMR120–20
CNPV*6024A**	0.98	0.94	58VMR120–20
CNPV*6124A**	1.00	0.96	58VMR120–20
CSPH*4812A**	0.98	0.98	58VMR120–20
CSPH*6012A**	0.98	0.94	58VMR120–20
CAP**4821A**	0.91	0.91	59*N*A100V21**20
CAP**4823A**	0.91	0.91	59*N*A100V21**20
CAP**4824A**	0.91	0.91	59*N*A100V21**20
CAP**6021A**	0.97	0.95	59*N*A100V21**20
CAP**6024A**	0.97	0.95	59*N*A100V21**20
CAP**6025A**	0.97	0.95	59*N*A100V21**20
CNPH*4821A**	0.91	0.90	59*N*A100V21**20
CNPH*6024A**	0.97	0.95	59*N*A100V21**20
CNPH*6124A**	0.98	0.96	59*N*A100V21**20
CNPV*4821A**	0.91	0.90	59*N*A100V21**20
CNPV*4824A**	0.91	0.90	59*N*A100V21**20
CNPV*6024A**	0.97	0.95	59*N*A100V21**20
CNPV*6124A**	0.99	0.95	59*N*A100V21**20
CSPH*4812A**	0.97	0.95	59*N*A100V21**20
CSPH*6012A**	0.98	0.94	59*N*A100V21**20
CAP**4823A**	0.91	0.90	59*N*A120V24**22
CAP**4824A**	0.91	0.90	59*N*A120V24**22
CAP**6024A**	0.98	0.94	59*N*A120V24**22
CAP**6025A**	0.98	0.94	59*N*A120V24**22
CNPH*4821A**	0.91	0.90	59*N*A120V24**22
CNPH*6024A**	0.97	0.93	59*N*A120V24**22
CNPH*6124A**	0.98	0.94	59*N*A120V24**22
CNPV*4824A**	0.91	0.90	59*N*A120V24**22
CNPV*6024A**	0.97	0.93	59*N*A120V24**22
CNPV*6124A**	0.99	0.94	59*N*A120V24**22
CSPH*4812A**	0.97	0.95	59*N*A120V24**22
CSPH*6012A**	0.98	0.94	59*N*A120V24**22
CNPH*4821A**	0.91	0.91	59*P5A080E17**16
CNPH*6024A**	0.98	0.98	59*P5A080E17**16
CNPV*4821A**	0.91	0.91	59*P5A080E17**16
CSPH*6012A**	0.98	0.96	59*P5A080E17**16
CAP**4821A**	0.91	0.91	59*P5A100E21**16
CAP**4823A**	0.91	0.91	59*P5A100E21**16
CAP**4824A**	0.91	0.91	59*P5A100E21**16
CAP**6021A**	0.98	0.96	59*P5A100E21**16
CAP**6024A**	0.98	0.96	59*P5A100E21**16
CAP**6025A**	0.98	0.96	59*P5A100E21**16
CNPH*4821A**	0.97	0.97	59*P5A100E21**16
CNPH*6024A**	0.98	0.96	59*P5A100E21**16
CNPH*6124A**	0.98	0.96	59*P5A100E21**16
CNPV*4821A**	0.97	0.97	59*P5A100E21**16
CNPV*4824A**	0.97	0.97	59*P5A100E21**16
CNPV*6024A**	0.98	0.96	59*P5A100E21**16
CNPV*6124A**	0.99	0.95	59*P5A100E21**16
CSPH*4812A**	0.97	0.97	59*P5A100E21**16
CSPH*6012A**	0.99	0.97	59*P5A100E21**16

COOLING INDOOR MODEL	CAPACITY	POWER	FURNACE MODEL
CAP**4823A**	0.97	0.95	59*P5A120E24**22
CAP**4824A**	0.97	0.95	59*P5A120E24**22
CAP**6024A**	0.99	0.95	59*P5A120E24**22
CAP**6025A**	0.99	0.95	59*P5A120E24**22
CNPH*4821A**	0.97	0.95	59*P5A120E24**22
CNPH*6024A**	0.99	0.95	59*P5A120E24**22
CNPH*6124A**	0.99	0.95	59*P5A120E24**22
CNPV*4824A**	0.97	0.95	59*P5A120E24**22
CNPV*6024A**	0.99	0.95	59*P5A120E24**22
CNPV*6124A**	1.00	0.95	59*P5A120E24**22
CSPH*4812A**	0.98	0.96	59*P5A120E24**22
CSPH*6012A**	0.99	0.95	59*P5A120E24**22
CNPH*4821A**	0.97	1.01	OVLAAB048112
CNPH*6024A**	0.98	0.98	OVLAAB048112
CNPH*6124A**	0.98	1.02	OVLAAB048112
CNPV*4821A**	0.97	1.01	OVLAAB048112
CNPV*4824A**	0.97	1.01	OVLAAB048112
CNPV*6024A**	0.98	1.02	OVLAAB048112
CNPV*6124A**	0.99	0.99	OVLAAB048112
CSPH*4812A**	0.97	1.01	OVLAAB048112
CSPH*6012A**	0.99	0.99	OVLAAB048112
CNPH*4821A**	0.98	0.98	OVLAAB060154
CNPH*6024A**	1.00	1.00	OVLAAB060154
CNPH*6124A**	1.00	1.00	OVLAAB060154
CNPV*4824A**	0.98	1.02	OVLAAB060154
CNPV*6024A**	1.00	1.00	OVLAAB060154
CNPV*6124A**	1.01	0.97	OVLAAB060154
CSPH*4812A**	0.99	0.99	OVLAAB060154
CSPH*6012A**	1.00	0.96	OVLAAB060154

See notes on pg. 78

DETAILED COOLING CAPACITIES# (CONT.)

EVAPORATOR AIR		CONDENSER ENTERING AIR TEMPERATURES °F (°C)																	
		75 (23.9)			85 (29.4)			95 (35)			105 (40.6)			115 (46.1)			125 (51.7)		
CFM	EWB °F (°C)	Capacity MBtuh†		Total System KW**	Capacity MBtuh†		Total System KW**	Capacity MBtuh†		Total System KW**	Capacity MBtuh†		Total System KW**	Capacity MBtuh†		Total System KW**	Capacity MBtuh†		Total System KW**
		Total	Sens‡		Total	Sens‡		Total	Sens‡		Total	Sens‡		Total	Sens‡		Total	Sens‡	
24ABC649A**30 Outdoor Section With CAP**6024A* Indoor Section																			
1400	72 (22.2)	57.54	29.08	3.21	54.91	28.10	3.66	52.22	27.11	4.12	49.43	26.10	4.59	46.46	25.03	5.09	43.18	23.88	5.66
	67 (19.4)	52.60	35.60	3.24	50.19	34.61	3.67	47.73	33.62	4.10	45.16	32.59	4.55	42.41	31.50	5.06	39.40	30.33	5.62
	63 (17.2)††	49.11	34.57	3.26	46.86	33.58	3.67	44.56	32.57	4.08	42.14	31.53	4.53	39.56	30.44	5.03	36.72	29.25	5.60
	62 (16.7)	48.14	42.09	3.26	45.97	41.09	3.66	43.75	40.07	4.08	41.45	38.99	4.52	39.06	39.06	5.02	36.78	36.78	5.60
	57 (13.9)	46.53	46.53	3.26	44.81	44.81	3.66	43.02	43.02	4.07	41.13	41.13	4.52	39.07	39.07	5.02	36.78	36.78	5.60
1600	72 (22.2)	58.62	30.51	3.27	55.85	29.51	3.73	53.04	28.50	4.19	50.14	27.47	4.66	47.06	26.39	5.17	43.67	25.22	5.74
	67 (19.4)	53.60	37.89	3.30	51.08	36.88	3.74	48.50	35.86	4.17	45.83	34.82	4.63	42.99	33.72	5.13	39.88	32.52	5.70
	63 (17.2)††	50.08	36.71	3.32	47.72	35.70	3.74	45.31	34.68	4.16	42.81	33.63	4.61	40.14	32.51	5.11	37.20	31.30	5.68
	62 (16.7)	49.23	45.22	3.32	46.99	44.16	3.74	44.76	44.49	4.16	42.69	42.69	4.61	40.49	40.49	5.11	38.05	38.05	5.68
	57 (13.9)	48.50	48.50	3.33	46.64	46.64	3.74	44.72	44.72	4.16	42.69	42.69	4.61	40.50	40.50	5.11	38.05	38.05	5.68
1800	72 (22.2)	59.40	31.86	3.33	56.54	30.84	3.80	53.64	29.82	4.26	50.65	28.78	4.74	47.47	27.68	5.25	43.99	26.50	5.81
	67 (19.4)	54.34	40.07	3.36	51.73	39.04	3.81	49.07	38.01	4.25	46.33	36.96	4.71	43.41	35.84	5.21	40.23	34.61	5.78
	63 (17.2)††	50.79	38.76	3.39	48.35	37.73	3.81	45.87	36.70	4.23	43.30	35.63	4.69	40.56	34.49	5.19	37.56	33.24	5.76
	62 (16.7)	50.22	49.72	3.39	48.15	48.15	3.81	46.11	46.11	4.24	43.96	43.96	4.69	41.64	41.64	5.19	39.07	39.07	5.77
	57 (13.9)	50.13	50.13	3.39	48.15	48.15	3.81	46.11	46.11	4.24	43.96	43.96	4.69	41.64	41.64	5.19	39.07	39.07	5.77

COOLING INDOOR MODEL	CAPACITY	POWER	FURNACE MODEL
*CAP**6024A**	1.00	1.00	
CAP**4817A**	0.97	0.97	
CAP**4821A**	0.99	1.01	
CAP**4823A**	0.99	1.01	
CAP**4824A**	0.99	1.01	
CAP**6021A**	1.00	1.00	
CAP**6025A**	1.00	1.00	
CNPF*4818A**	0.97	0.99	
CNPH*4821A**	0.99	1.01	
CNPH*6024A**	1.00	1.00	
CNPH*6124A**	1.00	1.00	
CNPV*4821A**	0.99	1.01	
CNPV*4824A**	0.99	1.01	
CNPV*6024A**	1.00	1.00	
CNPV*6124A**	1.00	1.00	
CSPH*4812A**	0.99	0.99	
CSPH*6012A**	1.00	1.00	
FE4AN(B,F)005	1.00	0.94	
FE4ANB006	1.00	0.90	
FV4BN(B,F)005	1.00	0.94	
FV4BNB006	1.01	0.93	
FV4CN(B,F)005	1.00	0.94	
FV4CNB006	1.00	0.90	
FX4CN(B,F)048	1.01	0.99	
FX4CN(B,F)060	1.02	0.98	
FY4ANB060	1.01	1.03	
FY4ANF048	1.00	1.04	
CAP**4817A**	0.97	0.94	58CV(A,X)090–16
CNPH*4821A**	0.98	0.95	58CV(A,X)090–16
CNPH*6024A**	0.99	0.95	58CV(A,X)090–16
CNPH*6124A**	0.99	0.96	58CV(A,X)090–16
CSPH*4812A**	0.98	0.95	58CV(A,X)090–16
CSPH*6012A**	1.00	0.96	58CV(A,X)090–16

COOLING INDOOR MODEL	CAPACITY	POWER	FURNACE MODEL
CAP**4821A**	0.97	0.94	58CV(A,X)110–20
CAP**6021A**	0.99	0.93	58CV(A,X)110–20
CNPH*4821A**	0.98	0.94	58CV(A,X)110–20
CNPH*6024A**	0.99	0.95	58CV(A,X)110–20
CNPH*6124A**	0.99	0.95	58CV(A,X)110–20
CNPV*4821A**	0.98	0.94	58CV(A,X)110–20
CNPV*6024A**	0.99	0.93	58CV(A,X)110–20
CNPV*6124A**	1.00	0.96	58CV(A,X)110–20
CSPH*4812A**	0.98	0.94	58CV(A,X)110–20
CSPH*6012A**	1.00	0.94	58CV(A,X)110–20
CAP**4824A**	0.98	0.94	58CV(A,X)135–22
CAP**6024A**	1.00	0.94	58CV(A,X)135–22
CNPH*4821A**	0.98	0.94	58CV(A,X)135–22
CNPH*6024A**	1.00	0.94	58CV(A,X)135–22
CNPH*6124A**	1.00	0.96	58CV(A,X)135–22
CNPV*4824A**	0.98	0.94	58CV(A,X)135–22
CNPV*6024A**	1.00	0.94	58CV(A,X)135–22
CNPV*6124A**	1.00	0.94	58CV(A,X)135–22
CSPH*4812A**	0.99	0.95	58CV(A,X)135–22
CSPH*6012A**	1.00	0.94	58CV(A,X)135–22
CAP**4824A**	0.98	0.94	58CV(A,X)155–22
CAP**6024A**	1.00	0.94	58CV(A,X)155–22
CNPH*4821A**	0.98	0.92	58CV(A,X)155–22
CNPH*6024A**	1.00	0.94	58CV(A,X)155–22
CNPH*6124A**	1.00	0.94	58CV(A,X)155–22
CNPV*4824A**	0.98	0.92	58CV(A,X)155–22
CNPV*6024A**	1.00	0.94	58CV(A,X)155–22
CNPV*6124A**	1.00	0.92	58CV(A,X)155–22
CSPH*4812A**	0.98	0.94	58CV(A,X)155–22
CSPH*6012A**	1.00	0.94	58CV(A,X)155–22
CAP**4823A**	0.98	1.00	58HDV080––20
CNPH*4821A**	0.98	1.00	58HDV080––20
CNPH*6024A**	1.00	0.98	58HDV080––20

COOLING INDOOR MODEL	CAPACITY	POWER	FURNACE MODEL
CNPH*6124A**	1.00	0.98	58HDV080––20
CSPH*4812A**	0.99	1.01	58HDV080––20
CSPH*6012A**	1.00	0.98	58HDV080––20
CAP**4824A**	0.97	0.94	58HDV100––20
CAP**6024A**	1.00	0.98	58HDV100––20
CAP**6025A**	1.00	0.98	58HDV100––20
CNPH*4821A**	0.98	0.95	58HDV100––20
CNPH*6024A**	0.99	0.96	58HDV100––20
CNPH*6124A**	1.00	0.98	58HDV100––20
CNPV*4824A**	0.98	0.95	58HDV100––20
CNPV*6024A**	0.99	0.96	58HDV100––20
CNPV*6124A**	1.00	0.98	58HDV100––20
CSPH*4812A**	0.98	0.95	58HDV100––20
CSPH*6012A**	1.00	0.98	58HDV100––20
CAP**4817A**	0.98	0.95	58ME(B,C)080–16
CNPH*4821A**	0.98	0.95	58ME(B,C)080–16
CNPH*6024A**	0.99	0.96	58ME(B,C)080–16
CNPH*6124A**	1.00	0.98	58ME(B,C)080–16
CSPH*4812A**	0.98	0.95	58ME(B,C)080–16
CSPH*6012A**	1.00	0.98	58ME(B,C)080–16
CAP**4821A**	0.98	0.95	58ME(B,C)100–20
CAP**6021A**	1.00	0.94	58ME(B,C)100–20
CNPH*4821A**	0.98	0.95	58ME(B,C)100–20
CNPH*6024A**	1.00	0.94	58ME(B,C)100–20
CNPH*6024A**	1.00	0.94	58ME(B,C)100–20
CNPH*6124A**	1.00	0.96	58ME(B,C)100–20
CNPV*4821A**	0.98	0.95	58ME(B,C)100–20
CNPV*6024A**	1.00	0.94	58ME(B,C)100–20
CNPV*6024A**	1.00	0.94	58ME(B,C)100–20
CNPV*6124A**	1.00	0.94	58ME(B,C)100–20
CSPH*4812A**	0.98	0.95	58ME(B,C)100–20
CSPH*6012A**	1.00	0.94	58ME(B,C)100–20
CAP**4824A**	0.98	0.95	58ME(B,C)120–20

DETAILED COOLING CAPACITIES# (CONT.)

24ABC649A30 Outdoor Section With CAP**6024A* Indoor Section**

COOLING INDOOR MODEL	CAPACITY	POWER	FURNACE MODEL
CAP**6024A**	1.00	0.94	58ME(B,C)120–20
CNPH*4821A**	0.99	0.96	58ME(B,C)120–20
CNPH*6024A**	1.00	0.94	58ME(B,C)120–20
CNPH*6024A**	1.00	0.94	58ME(B,C)120–20
CNPH*6124A**	1.00	0.96	58ME(B,C)120–20
CNPV*4824A**	0.98	0.95	58ME(B,C)120–20
CNPV*6024A**	1.00	0.94	58ME(B,C)120–20
CNPV*6124A**	1.00	0.94	58ME(B,C)120–20
CSPH*4812A**	0.98	0.95	58ME(B,C)120–20
CSPH*6012A**	1.00	0.94	58ME(B,C)120–20
CAP**4821A**	0.97	0.97	58MV(B,C)080–20
CAP**6021A**	0.99	0.95	58MV(B,C)080–20
CNPH*4821A**	0.97	0.94	58MV(B,C)080–20
CNPH*6024A**	0.99	0.95	58MV(B,C)080–20
CNPH*6124A**	0.99	0.96	58MV(B,C)080–20
CNPV*4821A**	0.97	0.94	58MV(B,C)080–20
CNPV*6124A**	0.99	0.95	58MV(B,C)080–20
CSPH*4812A**	0.97	0.97	58MV(B,C)080–20
CSPH*6012A**	0.99	0.95	58MV(B,C)080–20
CAP**4821A**	0.97	0.94	58MV(B,C)100–20
CAP**6021A**	0.99	0.95	58MV(B,C)100–20
CNPH*4821A**	0.97	0.94	58MV(B,C)100–20
CNPH*6024A**	0.99	0.95	58MV(B,C)100–20
CNPH*6124A**	1.00	0.98	58MV(B,C)100–20
CNPV*4821A**	0.97	0.94	58MV(B,C)100–20
CNPV*6124A**	1.00	0.98	58MV(B,C)100–20
CSPH*4812A**	0.97	0.94	58MV(B,C)100–20
CSPH*6012A**	1.00	0.96	58MV(B,C)100–20
CAP**4824A**	0.97	0.94	58MV(B,C)120–20
CAP**6024A**	0.99	0.95	58MV(B,C)120–20
CNPH*4821A**	0.97	0.94	58MV(B,C)120–20
CNPH*6024A**	0.99	0.95	58MV(B,C)120–20
CNPH*6124A**	0.99	0.95	58MV(B,C)120–20
CNPV*4824A**	0.97	0.94	58MV(B,C)120–20
CNPV*6024A**	0.99	0.95	58MV(B,C)120–20
CNPV*6124A**	1.00	0.96	58MV(B,C)120–20
CSPH*4812A**	0.98	0.95	58MV(B,C)120–20
CSPH*6012A**	1.00	0.96	58MV(B,C)120–20
CAP**4817A**	0.96	1.00	58PH*070–16
CNPH*4821A**	0.97	1.01	58PH*070–16
CNPH*6024A**	0.99	1.01	58PH*070–16
CNPH*6124A**	0.99	1.02	58PH*070–16
CSPH*4812A**	0.97	1.01	58PH*070–16
CSPH*6012A**	0.99	1.01	58PH*070–16
CAP**4821A**	0.98	0.95	58PH*090–16
CAP**6021A**	0.99	0.95	58PH*090–16
CNPH*4821A**	0.98	0.95	58PH*090–16
CNPH*6024A**	1.00	0.96	58PH*090–16
CNPH*6124A**	1.00	0.96	58PH*090–16
CNPV*4821A**	0.98	0.95	58PH*090–16
CNPV*6124A**	1.01	0.97	58PH*090–16
CSPH*4812A**	0.98	0.95	58PH*090–16

COOLING INDOOR MODEL	CAPACITY	POWER	FURNACE MODEL
CSPH*6012A**	1.00	0.96	58PH*090–16
CAP**4821A**	0.98	0.94	58PH*110–20
CAP**6021A**	0.99	0.93	58PH*110–20
CNPH*4821A**	0.98	0.94	58PH*110–20
CNPH*6024A**	1.00	0.94	58PH*110–20
CNPH*6124A**	1.00	0.96	58PH*110–20
CNPV*4821A**	0.98	0.94	58PH*110–20
CNPV*6024A**	1.00	0.94	58PH*110–20
CNPV*6124A**	1.00	0.94	58PH*110–20
CSPH*4812A**	0.98	0.94	58PH*110–20
CSPH*6012A**	1.00	0.94	58PH*110–20
CAP**4824A**	0.98	0.94	58PH*135–20
CAP**6024A**	1.00	0.96	58PH*135–20
CNPH*4821A**	0.98	0.94	58PH*135–20
CNPH*6024A**	1.00	0.96	58PH*135–20
CNPH*6124A**	1.00	0.96	58PH*135–20
CNPV*4824A**	0.98	0.94	58PH*135–20
CNPV*6024A**	1.00	0.96	58PH*135–20
CNPV*6124A**	1.00	0.96	58PH*135–20
CSPH*4812A**	0.98	0.94	58PH*135–20
CSPH*6012A**	1.00	0.96	58PH*135–20
CAP**4821A**	0.97	0.97	58UVB080–20
CAP**4821A**	0.97	0.97	58UVB080–20
CAP**6021A**	0.99	0.95	58UVB080–20
CAP**6021A**	0.99	0.95	58UVB080–20
CNPV*4821A**	0.97	0.94	58UVB080–20
CNPV*4821A**	0.97	0.94	58UVB080–20
CNPV*6124A**	0.99	0.95	58UVB080–20
CNPV*6124A**	0.99	0.95	58UVB080–20
CAP**4821A**	0.97	0.94	58UVB100–20
CAP**4821A**	0.97	0.94	58UVB100–20
CAP**6021A**	0.99	0.95	58UVB100–20
CAP**6021A**	0.99	0.95	58UVB100–20
CNPV*4821A**	0.97	0.94	58UVB100–20
CNPV*4821A**	0.97	0.94	58UVB100–20
CNPV*6124A**	1.00	0.98	58UVB100–20
CNPV*6124A**	1.00	0.98	58UVB100–20
CAP**4824A**	0.97	0.94	58UVB120–20
CAP**4824A**	0.97	0.94	58UVB120–20
CAP**6024A**	0.99	0.95	58UVB120–20
CAP**6024A**	0.99	0.95	58UVB120–20
CNPV*4824A**	0.97	0.94	58UVB120–20
CNPV*4824A**	0.97	0.94	58UVB120–20
CNPV*6024A**	0.99	0.95	58UVB120–20
CNPV*6024A**	0.99	0.95	58UVB120–20
CNPV*6124A**	1.00	0.96	58UVB120–20
CNPV*6124A**	1.00	0.96	58UVB120–20
CAP**4821A**	0.97	0.94	58VLR120–20
CAP**6021A**	0.99	0.96	58VLR120–20
CNPH*4821A**	0.97	0.94	58VLR120–20
CNPH*6024A**	0.99	0.96	58VLR120–20
CNPH*6124A**	0.99	0.96	58VLR120–20

COOLING INDOOR MODEL	CAPACITY	POWER	FURNACE MODEL
CNPV*4821A**	0.97	0.94	58VLR120–20
CSPH*4812A**	0.98	0.95	58VLR120–20
CSPH*6012A**	0.99	0.93	58VLR120–20
CAP**4821A**	0.97	0.95	58VMR120–20
CAP**6021A**	0.99	0.96	58VMR120–20
CNPH*4821A**	0.97	0.94	58VMR120–20
CNPH*6024A**	0.99	0.96	58VMR120–20
CNPH*6124A**	0.99	0.96	58VMR120–20
CNPV*4821A**	0.97	0.94	58VMR120–20
CSPH*4812A**	0.98	0.95	58VMR120–20
CSPH*6012A**	0.99	0.96	58VMR120–20
CAP**4821A**	0.96	0.95	59*N*A100V21**20
CAP**4823A**	0.96	0.95	59*N*A100V21**20
CAP**4824A**	0.96	0.95	59*N*A100V21**20
CAP**6021A**	0.98	0.95	59*N*A100V21**20
CAP**6024A**	0.98	0.95	59*N*A100V21**20
CAP**6025A**	0.98	0.95	59*N*A100V21**20
CNPH*4821A**	0.97	0.94	59*N*A100V21**20
CNPH*6024A**	0.98	0.95	59*N*A100V21**20
CNPH*6124A**	0.99	0.96	59*N*A100V21**20
CNPV*4821A**	0.97	0.94	59*N*A100V21**20
CNPV*4824A**	0.97	0.94	59*N*A100V21**20
CNPV*6024A**	0.98	0.95	59*N*A100V21**20
CNPV*6124A**	0.99	0.93	59*N*A100V21**20
CSPH*4812A**	0.97	0.94	59*N*A100V21**20
CSPH*6012A**	0.99	0.96	59*N*A100V21**20
CAP**4823A**	0.96	0.93	59*N*A120V24**22
CAP**4824A**	0.96	0.93	59*N*A120V24**22
CAP**6024A**	0.98	0.92	59*N*A120V24**22
CAP**6025A**	0.98	0.92	59*N*A120V24**22
CNPH*4821A**	0.97	0.94	59*N*A120V24**22
CNPH*6024A**	0.98	0.92	59*N*A120V24**22
CNPH*6124A**	0.99	0.93	59*N*A120V24**22
CNPV*4824A**	0.97	0.94	59*N*A120V24**22
CNPV*6024A**	0.98	0.92	59*N*A120V24**22
CNPV*6124A**	0.99	0.93	59*N*A120V24**22
CSPH*4812A**	0.97	0.94	59*N*A120V24**22
CSPH*6012A**	0.99	0.93	59*N*A120V24**22
CNPH*4821A**	0.97	0.99	59*P5A080E17**16
CNPH*6024A**	0.99	0.98	59*P5A080E17**16
CNPV*4821A**	0.97	0.99	59*P5A080E17**16
CSPH*6012A**	0.99	0.98	59*P5A080E17**16
CAP**4821A**	0.97	0.96	59*P5A100E21**16
CAP**4823A**	0.97	0.96	59*P5A100E21**16
CAP**4824A**	0.97	0.96	59*P5A100E21**16
CAP**6021A**	0.99	0.96	59*P5A100E21**16
CAP**6024A**	0.99	0.96	59*P5A100E21**16
CAP**6025A**	0.99	0.96	59*P5A100E21**16
CNPH*4821A**	0.97	0.96	59*P5A100E21**16
CNPH*6024A**	0.99	0.96	59*P5A100E21**16
CNPH*6124A**	0.99	0.96	59*P5A100E21**16
CNPV*4821A**	0.97	0.96	59*P5A100E21**16

DETAILED COOLING CAPACITIES# (CONT.)

24ABC649A30 Outdoor Section With CAP**6024A* Indoor Section**

COOLING INDOOR MODEL	CAPACITY	POWER	FURNACE MODEL
CNPV*4824A**	0.97	0.96	59*P5A100E21**16
CNPV*6024A**	0.99	0.96	59*P5A100E21**16
CNPV*6124A**	1.00	0.98	59*P5A100E21**16
CSPH*4812A**	0.98	0.97	59*P5A100E21**16
CSPH*6012A**	0.99	0.96	59*P5A100E21**16
CAP**4823A**	0.97	0.94	59*P5A120E24**22
CAP**4824A**	0.97	0.94	59*P5A120E24**22
CAP**6024A**	1.00	0.94	59*P5A120E24**22
CAP**6025A**	1.00	0.94	59*P5A120E24**22
CNPH*4821A**	0.98	0.95	59*P5A120E24**22
CNPH*6024A**	1.00	0.94	59*P5A120E24**22
CNPH*6124A**	1.00	0.94	59*P5A120E24**22
CNPV*4824A**	0.98	0.95	59*P5A120E24**22
CNPV*6024A**	1.00	0.94	59*P5A120E24**22
CNPV*6124A**	1.01	0.95	59*P5A120E24**22
CSPH*4812A**	0.98	0.95	59*P5A120E24**22
CSPH*6012A**	1.00	0.94	59*P5A120E24**22
CSPH*6012A**	1.00	1.02	OVLAAB048112
CNPH*4821A**	0.99	1.01	OVLAAB060154
CNPH*6024A**	1.00	0.98	OVLAAB060154
CNPH*6124A**	1.00	0.98	OVLAAB060154
CSPH*4812A**	1.00	1.02	OVLAAB060154
CSPH*6012A**	1.02	1.00	OVLAAB060154

See notes on pg. 78

DETAILED COOLING CAPACITIES# (CONT.)

EVAPORATOR AIR		CONDENSER ENTERING AIR TEMPERATURES °F (°C)																	
		75 (23.9)			85 (29.4)			95 (35)			105 (40.6)			115 (46.1)			125 (51.7)		
CFM	EWB °F (°C)	Capacity MBtuh†		Total System KW**	Capacity MBtuh†		Total System KW**	Capacity MBtuh†		Total System KW**	Capacity MBtuh†		Total System KW**	Capacity MBtuh†		Total System KW**	Capacity MBtuh†		Total System KW**
		Total	Sens‡		Total	Sens‡		Total	Sens‡		Total	Sens‡		Total	Sens‡		Total	Sens‡	
24ABC660A**30 Outdoor Section With CNPV*6124A** Indoor Section																			
1750	72 (22.2)	67.62	33.62	3.61	64.17	32.46	4.00	60.58	31.27	4.41	56.79	30.03	4.86	52.77	28.73	5.37	48.49	27.36	5.94
	67 (19.4)	61.61	41.91	3.60	58.55	40.77	3.97	55.32	39.59	4.38	51.90	38.34	4.83	48.28	37.03	5.33	44.39	35.62	5.90
	63 (17.2)††	57.26	40.25	3.60	54.46	39.14	3.96	51.50	37.96	4.36	48.36	36.73	4.80	45.00	35.42	5.31	41.41	34.01	5.88
	62 (16.7)	56.64	50.02	3.59	54.07	53.77	3.96	51.61	51.61	4.36	48.99	48.99	4.81	46.15	46.15	5.32	43.04	43.04	5.90
	57 (13.9)	56.19	56.19	3.59	53.95	53.95	3.96	51.53	51.53	4.36	48.93	48.93	4.81	46.09	46.09	5.32	42.99	42.99	5.90
2000	72 (22.2)	68.55	35.38	3.71	64.97	34.21	4.10	61.24	32.99	4.51	57.31	31.73	4.96	53.16	30.40	5.47	48.76	29.01	6.04
	67 (19.4)	62.54	44.78	3.70	59.34	43.61	4.07	56.00	42.40	4.48	52.47	41.12	4.93	48.74	39.76	5.43	44.80	38.28	6.01
	63 (17.2)††	58.17	42.92	3.69	55.24	41.77	4.06	52.18	40.57	4.46	48.93	39.29	4.90	45.49	37.93	5.41	41.84	36.44	5.99
	62 (16.7)	58.38	58.38	3.69	55.95	55.95	4.06	53.34	53.34	4.47	50.54	50.54	4.92	47.51	47.51	5.42	44.19	44.19	6.00
	57 (13.9)	58.30	58.30	3.69	55.88	55.88	4.06	53.28	53.28	4.46	50.48	50.48	4.92	47.45	47.45	5.42	44.14	44.14	6.00
2250	72 (22.2)	69.20	37.05	3.81	65.50	35.85	4.20	61.65	34.62	4.61	57.62	33.34	5.06	53.39	32.00	5.57	48.89	30.59	6.14
	67 (19.4)	63.21	47.52	3.80	59.93	46.32	4.17	56.49	45.07	4.58	52.89	43.73	5.03	49.12	42.29	5.53	45.19	44.77	6.11
	63 (17.2)††	58.84	45.45	3.79	55.83	44.27	4.16	52.68	43.02	4.56	49.37	41.69	5.01	45.89	40.23	5.51	42.31	42.31	6.09
	62 (16.7)	60.10	60.10	3.79	57.51	57.51	4.16	54.74	54.74	4.57	51.77	51.77	5.02	48.57	48.57	5.53	45.09	45.09	6.11
	57 (13.9)	60.03	60.03	3.79	57.44	57.44	4.16	54.68	54.68	4.57	51.71	51.71	5.02	48.52	48.52	5.53	45.04	45.04	6.11

COOLING INDOOR MODEL	CAPACITY	POWER	FURNACE MODEL
*CNPV*6124A**	1.00	1.00	
CAP**6021A**	0.96	0.96	
CAP**6024A**	0.98	0.98	
CAP**6025A**	0.98	0.98	
CNPH*6024A**	0.98	0.98	
CNPH*6124A**	0.98	0.98	
CNPV*6024A**	0.98	0.98	
CSPH*6012A**	0.98	0.98	
CSPH*6012A**	0.98	0.98	
FB4CNF060	0.96	0.93	
FE4ANB006	0.98	0.94	
FV4BNB006	0.98	0.90	
FV4CNB006	0.98	0.94	
FX4CN(B,F)060	0.99	0.92	
FX4DN(B,F)061	0.99	0.92	
FY4ANB060	0.98	1.01	
FY5BNB060	0.97	1.01	
CAP**6021A**	0.96	0.96	58CV(A,X)110–20
CAP**6024A**	0.96	0.96	58CV(A,X)110–20
CNPH*6024A**	0.96	0.96	58CV(A,X)110–20
CNPH*6124A**	0.96	0.96	58CV(A,X)110–20
CNPV*6024A**	0.96	0.96	58CV(A,X)110–20
CNPV*6124A**	0.98	0.94	58CV(A,X)110–20
CSPH*6012A**	0.96	0.96	58CV(A,X)110–20
CAP**6021A**	0.97	0.97	58CV(A,X)135–22
CAP**6024A**	0.96	0.93	58CV(A,X)135–22
CNPH*6024A**	0.96	0.93	58CV(A,X)135–22
CNPH*6124A**	0.97	0.94	58CV(A,X)135–22
CNPV*6024A**	0.96	0.93	58CV(A,X)135–22
CNPV*6124A**	0.98	0.94	58CV(A,X)135–22
CSPH*6012A**	0.97	0.94	58CV(A,X)135–22
CAP**6021A**	0.97	0.94	58CV(A,X)155–22
CAP**6024A**	0.97	0.94	58CV(A,X)155–22
CNPH*6024A**	0.97	0.94	58CV(A,X)155–22
CNPH*6124A**	0.97	0.94	58CV(A,X)155–22
CNPV*6024A**	0.97	0.94	58CV(A,X)155–22
CNPV*6124A**	0.99	0.95	58CV(A,X)155–22

COOLING INDOOR MODEL	CAPACITY	POWER	FURNACE MODEL
CSPH*6012A**	0.98	0.94	58CV(A,X)155–22
CNPV*6124A**	0.98	0.97	58HDV080– –20
CNPV*6124A**	0.98	0.94	58HDV100– –20
CNPH*6024A**	0.96	0.96	58ME(B,C)080–16
CSPH*6012A**	0.96	0.96	58ME(B,C)080–16
CAP**6021A**	0.96	0.96	58ME(B,C)100–20
CAP**6024A**	0.96	0.93	58ME(B,C)100–20
CNPH*6024A**	0.96	0.96	58ME(B,C)100–20
CNPH*6124A**	0.96	0.93	58ME(B,C)100–20
CNPV*6024A**	0.96	0.96	58ME(B,C)100–20
CNPV*6124A**	0.98	0.94	58ME(B,C)100–20
CSPH*6012A**	0.96	0.93	58ME(B,C)100–20
CAP**6021A**	0.96	0.93	58ME(B,C)120–20
CAP**6024A**	0.96	0.93	58ME(B,C)120–20
CNPH*6024A**	0.97	0.94	58ME(B,C)120–20
CNPV*6024A**	0.96	0.93	58ME(B,C)120–20
CNPV*6124A**	0.98	0.94	58ME(B,C)120–20
CSPH*6012A**	0.97	0.94	58ME(B,C)120–20
CNPV*6124A**	0.98	0.98	58MV(B,C)120–20
CSPH*6012A**	0.96	0.96	58MV(B,C)120–20
CAP**6021A**	0.96	0.96	58PH*090–16
CAP**6024A**	0.96	0.96	58PH*090–16
CNPH*6024A**	0.96	0.96	58PH*090–16
CNPH*6124A**	0.96	0.96	58PH*090–16
CNPV*6024A**	0.96	0.96	58PH*090–16
CNPV*6124A**	0.98	0.94	58PH*090–16
CSPH*6012A**	0.96	0.96	58PH*090–16
CAP**6021A**	0.96	0.93	58PH*110–20
CAP**6024A**	0.96	0.93	58PH*110–20
CNPH*6024A**	0.96	0.96	58PH*110–20
CNPH*6124A**	0.98	0.94	58PH*110–20
CNPV*6024A**	0.96	0.93	58PH*110–20
CNPV*6124A**	0.98	0.94	58PH*110–20
CSPH*6012A**	0.98	0.94	58PH*110–20
CAP**6021A**	0.96	0.96	58PH*135–20
CAP**6024A**	0.96	0.96	58PH*135–20
CNPH*6024A**	0.96	0.96	58PH*135–20

COOLING INDOOR MODEL	CAPACITY	POWER	FURNACE MODEL
CNPH*6124A**	0.96	0.93	58PH*135–20
CNPV*6024A**	0.96	0.96	58PH*135–20
CNPV*6124A**	0.98	0.94	58PH*135–20
CSPH*6012A**	0.97	0.94	58PH*135–20
CNPV*6124A**	0.98	0.98	58UVB120–20
CNPV*6124A**	0.98	0.98	58UVB120–20
CAP**6024A**	0.96	0.93	58VLR120–20
CNPH*6024A**	0.96	0.96	58VLR120–20
CNPV*6024A**	0.96	0.96	58VLR120–20
CNPV*6124A**	0.98	0.98	58VLR120–20
CSPH*6012A**	0.96	0.96	58VLR120–20
CNPV*6124A**	0.98	0.98	58VMR120–20
CAP**6024A**	0.96	0.95	59*N*A120V24**22
CAP**6025A**	0.96	0.95	59*N*A120V24**22
CNPH*6024A**	0.96	0.95	59*N*A120V24**22
CNPH*6124A**	0.96	0.95	59*N*A120V24**22
CNPV*6024A**	0.96	0.95	59*N*A120V24**22
CNPV*6124A**	0.97	0.94	59*N*A120V24**22
CSPH*6012A**	0.96	0.93	59*N*A120V24**22
CAP**6024A**	0.96	0.95	59*P5A120E24**22
CAP**6025A**	0.96	0.95	59*P5A120E24**22
CNPH*6024A**	0.96	0.95	59*P5A120E24**22
CNPH*6124A**	0.96	0.95	59*P5A120E24**22
CNPV*6024A**	0.96	0.95	59*P5A120E24**22
CNPV*6124A**	0.97	0.94	59*P5A120E24**22
CSPH*6012A**	0.97	0.94	59*P5A120E24**22

See notes on pg. 78

DETAILED COOLING CAPACITIES# (CONT.)

EVAPORATOR AIR		CONDENSER ENTERING AIR TEMPERATURES °F (°C)																	
		75 (23.9)			85 (29.4)			95 (35)			105 (40.6)			115 (46.1)			125 (51.7)		
CFM	EWB °F (°C)	Capacity MBtuh†		Total System KW**	Capacity MBtuh†		Total System KW**	Capacity MBtuh†		Total System KW**	Capacity MBtuh†		Total System KW**	Capacity MBtuh†		Total System KW**	Capacity MBtuh†		Total System KW**
		Total	Sens‡		Total	Sens‡		Total	Sens‡		Total	Sens‡		Total	Sens‡		Total	Sens‡	
24ABC661A**30 Outdoor Section With CNPV*6124A**+TDR Indoor Section																			
1750	72 (22.2)	68.26	35.40	3.65	65.62	34.24	4.19	62.70	33.02	4.80	59.44	31.72	5.50	55.84	30.35	6.31	51.84	28.89	7.25
	67 (19.4)	62.16	43.65	3.59	59.80	42.52	4.12	57.18	41.32	4.72	54.27	40.05	5.42	51.03	38.69	6.24	47.43	37.23	7.18
	62 (16.7)	56.92	51.79	3.54	54.89	50.66	4.07	52.67	49.40	4.67	50.45	50.45	5.37	48.08	48.08	6.19	45.35	45.35	7.15
	57 (13.9)	55.79	55.79	3.53	54.23	54.23	4.06	52.43	52.43	4.67	50.37	50.37	5.37	48.01	48.01	6.19	45.29	45.29	7.15
2000	72 (22.2)	69.37	37.22	3.75	66.58	36.03	4.29	63.50	34.78	4.91	60.12	33.47	5.61	56.36	32.08	6.43	52.22	30.60	7.37
	67 (19.4)	63.22	46.57	3.69	60.75	45.42	4.22	58.00	44.20	4.83	54.96	42.90	5.54	51.60	41.51	6.35	47.88	40.00	7.30
	62 (16.7)	58.30	55.64	3.64	56.40	56.40	4.18	54.43	54.43	4.79	52.18	52.18	5.50	49.62	49.62	6.32	46.69	46.69	7.28
	57 (13.9)	58.04	58.04	3.64	56.32	56.32	4.17	54.35	54.35	4.79	52.12	52.12	5.50	49.56	49.56	6.32	46.64	46.64	7.28
2250	72 (22.2)	70.16	38.93	3.85	67.25	37.73	4.39	64.06	36.47	5.01	60.55	35.14	5.72	56.68	33.73	6.54	52.43	32.24	7.48
	67 (19.4)	64.02	49.36	3.79	61.43	48.19	4.32	58.58	46.94	4.94	55.46	45.61	5.65	52.01	44.17	6.47	48.25	42.59	7.41
	62 (16.7)	59.97	59.97	3.75	58.12	58.12	4.29	55.99	55.99	4.91	53.58	53.58	5.62	50.85	50.85	6.45	47.74	47.74	7.41
	57 (13.9)	59.89	59.89	3.75	58.04	58.04	4.29	55.93	55.93	4.91	53.52	53.52	5.62	50.79	50.79	6.45	47.69	47.69	7.40

COOLING INDOOR MODEL	CAPACITY	POWER	FURNACE MODEL
*CNPV*6124A**	1.00	1.00	
CAP**6021A**	0.97	0.97	
CAP**6024A**	0.99	0.99	
CAP**6025A**	0.99	0.99	
CNPH*6024A**	0.99	0.99	
CNPH*6124A**	0.98	0.98	
CNPV*6024A**	0.99	0.99	
CSPH*6012A**	0.99	0.99	
FB4CNF060	0.97	0.97	
FE4ANB006	0.99	0.92	
FV4BNB006	0.99	0.90	
FV4CNB006	0.99	0.92	
FX4CN(B,F)060	1.01	0.95	
FX4DN(B,F)061	1.00	0.96	
FY4ANB060	0.99	1.02	
FY5BNB060	0.99	0.99	
CAP**6021A**	0.97	0.97	58CV(A,X)110–20
CAP**6024A**	0.97	0.94	58CV(A,X)110–20
CNPH*6024A**	0.97	0.94	58CV(A,X)110–20
CNPH*6124A**	0.97	0.94	58CV(A,X)110–20
CNPV*6024A**	0.97	0.97	58CV(A,X)110–20
CNPV*6124A**	0.98	0.94	58CV(A,X)110–20
CSPH*6012A**	0.98	0.94	58CV(A,X)110–20
CAP**6024A**	0.97	0.94	58CV(A,X)135–22
CAP**6025A**	0.97	0.94	58CV(A,X)135–22
CNPH*6024A**	0.97	0.94	58CV(A,X)135–22
CNPH*6124A**	0.98	0.94	58CV(A,X)135–22
CNPV*6024A**	0.97	0.94	58CV(A,X)135–22
CNPV*6124A**	0.99	0.92	58CV(A,X)135–22
CSPH*6012A**	0.98	0.94	58CV(A,X)135–22

COOLING INDOOR MODEL	CAPACITY	POWER	FURNACE MODEL
CAP**6024A**	0.97	0.94	58CV(A,X)155–22
CAP**6025A**	0.97	0.94	58CV(A,X)155–22
CNPH*6024A**	0.97	0.90	58CV(A,X)155–22
CNPH*6124A**	0.98	0.91	58CV(A,X)155–22
CNPV*6024A**	0.97	0.90	58CV(A,X)155–22
CNPV*6124A**	0.99	0.92	58CV(A,X)155–22
CSPH*6012A**	0.98	0.91	58CV(A,X)155–22
CNPH*6024A**	0.97	0.97	58ME(B,C)080–16
CSPH*6012A**	0.97	0.93	58ME(B,C)080–16
CAP**6021A**	0.97	0.93	58ME(B,C)100–20
CAP**6024A**	0.97	0.94	58ME(B,C)100–20
CNPH*6024A**	0.97	0.94	58ME(B,C)100–20
CNPH*6124A**	0.97	0.94	58ME(B,C)100–20
CNPV*6024A**	0.97	0.94	58ME(B,C)100–20
CNPV*6124A**	0.98	0.94	58ME(B,C)100–20
CSPH*6012A**	0.97	0.94	58ME(B,C)100–20
CAP**6024A**	0.97	0.94	58ME(B,C)120–20
CAP**6025A**	0.97	0.94	58ME(B,C)120–20
CNPH*6024A**	0.97	0.94	58ME(B,C)120–20
CNPH*6024A**	0.97	0.94	58ME(B,C)120–20
CNPH*6124A**	0.97	0.94	58ME(B,C)120–20
CNPV*6024A**	0.97	0.94	58ME(B,C)120–20
CNPV*6124A**	0.98	0.91	58ME(B,C)120–20
CSPH*6012A**	0.98	0.91	58ME(B,C)120–20
CNPV*6124A**	0.98	0.94	58MV(B,C)120–20
CSPH*6012A**	0.97	0.94	58MV(B,C)120–20
CAP**6021A**	0.97	0.94	58PH*110–20
CAP**6024A**	0.97	0.94	58PH*110–20
CNPH*6024A**	0.97	0.94	58PH*110–20
CNPH*6124A**	0.97	0.94	58PH*110–20

COOLING INDOOR MODEL	CAPACITY	POWER	FURNACE MODEL
CNPV*6024A**	0.97	0.94	58PH*110–20
CNPV*6124A**	0.99	0.92	58PH*110–20
CSPH*6012A**	0.98	0.94	58PH*110–20
CAP**6024A**	0.97	0.94	58PH*135–20
CAP**6025A**	0.97	0.94	58PH*135–20
CNPH*6024A**	0.97	0.94	58PH*135–20
CNPH*6124A**	0.97	0.94	58PH*135–20
CNPV*6024A**	0.97	0.94	58PH*135–20
CNPV*6124A**	0.98	0.94	58PH*135–20
CNPV*6124A**	0.98	0.94	58PH*135–20
CSPH*6012A**	0.98	0.94	58PH*135–20
CAP**6024A**	0.97	0.97	58VLR120–20
CNPH*6024A**	0.97	0.97	58VLR120–20
CNPV*6024A**	0.97	0.97	58VLR120–20
CNPV*6124A**	0.99	0.95	58VLR120–20
CSPH*6012A**	0.98	0.94	58VLR120–20
CAP**6024A**	0.97	0.97	59*N*A120V24**22
CAP**6025A**	0.97	0.97	59*N*A120V24**22
CNPH*6024A**	0.97	0.97	59*N*A120V24**22
CNPH*6124A**	0.98	0.98	59*N*A120V24**22
CNPV*6024A**	0.97	0.97	59*N*A120V24**22
CNPV*6124A**	0.99	0.95	59*N*A120V24**22
CSPH*6012A**	0.98	0.94	59*N*A120V24**22
CAP**6024A**	0.97	0.97	59*P5A120E24**22
CAP**6025A**	0.97	0.97	59*P5A120E24**22
CNPH*6024A**	0.97	0.97	59*P5A120E24**22
CNPH*6124A**	0.97	0.97	59*P5A120E24**22
CNPV*6024A**	0.97	0.97	59*P5A120E24**22
CNPV*6124A**	0.99	0.95	59*P5A120E24**22
CSPH*6012A**	0.98	0.98	59*P5A120E24**22

* Tested combination.
† Total and sensible capacities are net capacities. Blower motor heat has been subtracted.
‡ Sensible capacities shown are based on 80°F (27°C) entering air at the indoor coil. For sensible capacities at other than 80°F (27°C), deduct 835 Btuh (245 kW) per 1000 CFM (480 L/S) of indoor coil air for each degree below 80°F (27°C), or add 835 Btuh (245 kW) per 1000 CFM (480 L/S) of indoor coil air per degree above 80°F (27°C).
# Detailed cooling capacities are based on indoor and outdoor unit at the same elevation per AHRI standard 210/240–2008. If additional tubing length and/or indoor unit is located above outdoor unit, a slight variation in capacity may occur.
** System kw is total of indoor and outdoor unit kilowatts.
†† At TVA rating indoor condition (75°F edb/63°F ewb). All other indoor air temperatures are at 80°F edb.
NOTE: When the required data falls between the published data, interpolation may be performed. Extrapolation is not an acceptable practice.
EWB — Entering Wet Bulb

CONDENSER ONLY RATINGS

SST °F (°C)		CONDENSER ENTERING AIR TEMPERATURES °F (°C)							
		55 (12.78)	65 (18.33)	75 (23.89)	85 (29.44)	95 (35.0)	105 (40.56)	115 (46.11)	125 (51.67)
24ABC618A31**									
30 (–1.11)	TCG	15.70	14.90	14.10	13.20	12.30	11.30	10.20	9.20
	SDT	66.60	76.20	85.80	95.30	104.80	114.30	123.70	133.10
	KW	0.75	0.87	0.99	1.12	1.26	1.41	1.60	1.81
35 (1.67)	TCG	17.50	16.60	15.70	14.70	13.70	12.60	11.50	10.30
	SDT	67.80	77.30	86.80	96.30	105.70	115.10	124.40	133.80
	KW	0.75	0.87	0.99	1.12	1.26	1.42	1.60	1.81
40 (4.44)	TCG	19.40	18.40	17.40	16.30	15.20	14.00	12.80	11.50
	SDT	69.00	78.50	87.90	97.30	106.60	115.90	125.20	134.50
	KW	0.74	0.87	0.99	1.12	1.26	1.42	1.60	1.81
45 (7.22)	TCG	21.50	20.30	19.20	18.00	16.70	15.50	14.10	12.80
	SDT	70.40	79.70	89.00	98.30	107.60	116.90	126.10	135.30
	KW	0.74	0.86	0.99	1.13	1.27	1.43	1.61	1.82
50 (10.0)	TCG	23.60	22.40	21.10	19.70	18.40	17.00	15.60	14.10
	SDT	71.60	80.90	90.10	99.40	108.60	117.80	127.00	136.20
	KW	0.73	0.86	1.00	1.13	1.28	1.44	1.62	1.82
55 (12.78)	TCG	25.90	24.50	23.10	21.60	20.10	18.60	17.10	15.50
	SDT	73.00	82.10	91.30	100.50	109.70	118.80	128.00	137.10
	KW	0.73	0.86	1.00	1.14	1.29	1.45	1.63	1.84
24ABC624A30**									
30 (–1.11)	TCG	20.30	19.40	18.30	17.20	16.10	14.80	13.60	12.20
	SDT	66.10	75.80	85.30	94.90	104.40	114.00	123.40	132.80
	KW	1.00	1.15	1.30	1.47	1.65	1.85	2.09	2.36
35 (1.67)	TCG	22.60	21.40	20.30	19.10	17.80	16.50	15.10	13.60
	SDT	67.20	76.80	86.30	95.80	105.30	114.70	124.10	133.50
	KW	0.99	1.14	1.30	1.47	1.65	1.86	2.09	2.36
40 (4.44)	TCG	24.90	23.70	22.40	21.00	19.60	18.20	16.70	15.10
	SDT	68.40	77.90	87.30	96.70	106.10	115.50	124.80	134.10
	KW	0.98	1.14	1.30	1.47	1.66	1.86	2.09	2.36
45 (7.22)	TCG	27.40	26.00	24.60	23.10	21.60	20.10	18.40	16.70
	SDT	69.60	79.00	88.30	97.70	107.00	116.30	125.60	134.90
	KW	0.97	1.14	1.30	1.48	1.66	1.87	2.10	2.37
50 (10.0)	TCG	30.10	28.60	27.00	25.40	23.70	22.00	20.20	18.40
	SDT	70.80	80.10	89.40	98.70	107.90	117.20	126.40	135.60
	KW	0.96	1.13	1.30	1.48	1.67	1.88	2.11	2.37
55 (12.78)	TCG	33.00	31.30	29.50	27.70	25.90	24.10	22.10	20.20
	SDT	72.10	81.30	90.50	99.70	108.90	118.10	127.30	136.40
	KW	0.95	1.13	1.31	1.49	1.68	1.89	2.12	2.39
24ABC630A30**									
30 (–1.11)	TCG	24.90	23.50	22.20	20.80	19.40	17.90	16.20	14.40
	SDT	68.10	77.50	87.00	96.40	105.80	115.10	124.40	133.60
	KW	1.27	1.43	1.60	1.78	1.99	2.23	2.50	2.81
35 (1.67)	TCG	27.50	26.00	24.50	23.10	21.50	19.90	18.10	16.20
	SDT	69.40	78.70	88.10	97.40	106.70	116.00	125.30	134.40
	KW	1.28	1.44	1.61	1.79	2.00	2.24	2.51	2.82
40 (4.44)	TCG	30.30	28.60	27.10	25.50	23.80	22.00	20.10	18.10
	SDT	70.70	79.90	89.20	98.50	107.70	117.00	126.20	135.30
	KW	1.29	1.44	1.61	1.80	2.01	2.25	2.52	2.83
45 (7.22)	TCG	33.30	31.50	29.80	28.00	26.20	24.30	22.30	20.10
	SDT	72.00	81.20	90.40	99.60	108.80	118.00	127.20	136.30
	KW	1.29	1.44	1.61	1.80	2.01	2.26	2.53	2.85
50 (10.0)	TCG	36.50	34.50	32.60	30.70	28.80	26.70	24.50	22.20
	SDT	73.50	82.50	91.70	100.80	110.00	119.20	128.20	137.20
	KW	1.29	1.44	1.61	1.80	2.02	2.26	2.54	2.86
55 (12.78)	TCG	39.90	37.80	35.70	33.60	31.50	29.30	26.90	24.40
	SDT	75.00	84.00	93.00	102.10	111.20	120.30	129.30	138.20
	KW	1.29	1.44	1.61	1.80	2.02	2.27	2.54	2.86
24ABC636A30**									
30 (–1.11)	TCG	31.50	29.90	28.30	26.60	24.80	22.90	21.00	18.90
	SDT	68.90	78.20	87.50	96.80	106.20	115.50	124.90	134.20
	KW	1.50	1.73	1.96	2.21	2.50	2.82	3.21	3.66
35 (1.67)	TCG	34.80	33.00	31.20	29.40	27.40	25.40	23.30	21.10
	SDT	70.10	79.30	88.60	97.90	107.20	116.50	125.80	135.00
	KW	1.50	1.73	1.97	2.22	2.51	2.83	3.21	3.66
40 (4.44)	TCG	38.30	36.40	34.40	32.40	30.30	28.10	25.80	23.40
	SDT	71.40	80.60	89.80	99.00	108.20	117.40	126.70	135.90
	KW	1.51	1.74	1.98	2.24	2.52	2.85	3.22	3.66
45 (7.22)	TCG	42.10	40.00	37.80	35.60	33.30	30.90	28.40	25.80
	SDT	72.80	81.90	91.00	100.20	109.40	118.50	127.70	136.80
	KW	1.52	1.75	1.99	2.25	2.54	2.86	3.24	3.67
50 (10.0)	TCG	46.20	43.90	41.50	39.00	36.50	33.90	31.20	28.40
	SDT	74.40	83.30	92.40	101.50	110.50	119.60	128.70	137.70
	KW	1.53	1.77	2.01	2.27	2.56	2.88	3.25	3.68
55 (12.78)	TCG	50.50	47.90	45.30	42.70	39.90	37.10	34.20	31.10
	SDT	76.00	84.90	93.80	102.80	111.80	120.80	129.80	138.70
	KW	1.55	1.79	2.04	2.30	2.58	2.91	3.28	3.70

See notes on page 81

CONDENSER ONLY RATINGS CONTINUED

SST °F (°C)		CONDENSER ENTERING AIR TEMPERATURES °F (°C)							
		55 (12.78)	65 (18.33)	75 (23.89)	85 (29.44)	95 (35.0)	105 (40.56)	115 (46.11)	125 (51.67)
24ABC642A30**									
30 (–1.11)	TCG	37.90	36.20	34.30	32.30	30.10	27.90	25.50	23.00
	SDT	69.80	79.20	88.70	98.10	107.40	116.70	125.90	135.10
	KW	1.83	2.03	2.26	2.54	2.86	3.22	3.63	4.09
35 (1.67)	TCG	41.90	40.00	37.90	35.70	33.30	30.80	28.30	25.60
	SDT	71.20	80.60	89.90	99.20	108.40	117.70	126.80	136.00
	KW	1.84	2.04	2.28	2.56	2.88	3.24	3.65	4.10
40 (4.44)	TCG	46.10	44.00	41.70	39.20	36.70	34.00	31.20	28.30
	SDT	72.70	81.90	91.20	100.40	109.60	118.70	127.80	136.90
	KW	1.85	2.05	2.30	2.58	2.90	3.26	3.67	4.13
45 (7.22)	TCG	50.70	48.30	45.80	43.10	40.20	37.30	34.30	31.10
	SDT	74.20	83.30	92.50	101.60	110.80	119.80	128.90	137.90
	KW	1.86	2.07	2.32	2.60	2.92	3.29	3.70	4.15
50 (10.0)	TCG	55.50	52.90	50.10	47.10	44.00	40.80	37.50	34.10
	SDT	75.80	84.80	93.90	103.00	112.00	121.00	130.00	138.90
	KW	1.87	2.09	2.34	2.63	2.95	3.32	3.73	4.19
55 (12.78)	TCG	60.70	57.70	54.60	51.30	47.90	44.40	40.80	37.10
	SDT	77.40	86.40	95.40	104.40	113.40	122.30	131.20	140.00
	KW	1.89	2.11	2.36	2.66	2.99	3.36	3.77	4.22
24ABC648A31**									
30 (–1.11)	TCG	40.80	38.60	36.50	34.30	32.10	29.70	27.20	24.60
	SDT	67.20	76.60	86.10	95.50	104.90	114.30	123.60	132.90
	KW	1.98	2.28	2.56	2.85	3.16	3.50	3.88	4.33
35 (1.67)	TCG	45.10	42.70	40.30	37.90	35.40	32.80	30.10	27.30
	SDT	68.50	77.80	87.10	96.50	105.80	115.10	124.40	133.60
	KW	1.91	2.24	2.55	2.86	3.17	3.52	3.91	4.35
40 (4.44)	TCG	49.90	47.10	44.50	41.80	39.00	36.20	33.20	30.10
	SDT	69.80	79.00	88.30	97.50	106.80	116.00	125.20	134.40
	KW	1.80	2.16	2.50	2.84	3.17	3.53	3.92	4.36
45 (7.22)	TCG	55.00	52.00	49.00	46.00	42.90	39.80	36.50	33.10
	SDT	71.20	80.30	89.50	98.60	107.80	117.00	126.10	135.20
	KW	1.65	2.05	2.43	2.79	3.15	3.53	3.94	4.38
50 (10.0)	TCG	60.70	57.30	53.90	50.50	47.10	43.60	40.00	36.30
	SDT	72.60	81.70	90.70	99.80	108.90	118.00	127.10	136.10
	KW	1.46	1.90	2.32	2.72	3.11	3.51	3.94	4.39
55 (12.78)	TCG	66.80	63.00	59.20	55.40	51.60	47.70	43.70	39.60
	SDT	74.20	83.10	92.10	101.10	110.10	119.10	128.10	137.00
	KW	1.22	1.72	2.17	2.61	3.04	3.47	3.92	4.39
24ABC649A30**									
30 (–1.11)	TCG	45.00	42.40	39.90	37.40	34.90	32.30	29.50	26.40
	SDT	70.30	79.50	88.90	98.20	107.60	116.90	126.20	135.40
	KW	2.04	2.41	2.75	3.08	3.44	3.84	4.32	4.89
35 (1.67)	TCG	49.80	46.80	44.00	41.20	38.50	35.60	32.60	29.30
	SDT	71.70	80.90	90.10	99.40	108.70	118.00	127.20	136.30
	KW	1.99	2.39	2.75	3.10	3.47	3.87	4.34	4.90
40 (4.44)	TCG	54.90	51.50	48.40	45.30	42.20	39.10	35.80	32.30
	SDT	73.20	82.40	91.50	100.70	109.90	119.00	128.20	137.20
	KW	1.93	2.36	2.75	3.12	3.50	3.91	4.38	4.92
45 (7.22)	TCG	60.40	56.60	53.00	49.60	46.20	42.80	39.30	35.50
	SDT	74.80	83.90	92.90	102.00	111.10	120.20	129.20	138.10
	KW	1.86	2.33	2.75	3.14	3.53	3.95	4.41	4.94
50 (10.0)	TCG	66.20	62.00	58.00	54.20	50.50	46.70	42.90	38.70
	SDT	76.40	85.50	94.50	103.40	112.40	121.40	130.30	139.10
	KW	1.78	2.28	2.73	3.15	3.56	3.99	4.45	4.98
55 (12.78)	TCG	72.40	67.70	63.20	59.10	55.00	50.90	46.70	42.10
	SDT	78.20	87.10	96.10	104.90	113.80	122.60	131.40	140.10
	KW	1.68	2.23	2.71	3.16	3.59	4.02	4.49	5.01
24ABC660A30**									
30 (–1.11)	TCG	49.90	47.50	45.10	42.40	39.60	36.70	33.50	30.20
	SDT	70.90	80.40	89.80	99.20	108.50	117.80	127.00	136.30
	KW	2.31	2.60	2.90	3.24	3.61	4.05	4.56	5.17
35 (1.67)	TCG	55.30	52.60	49.80	46.90	43.90	40.70	37.30	33.80
	SDT	72.50	81.80	91.20	100.50	109.70	118.90	128.10	137.30
	KW	2.31	2.61	2.93	3.27	3.65	4.08	4.59	5.19
40 (4.44)	TCG	61.00	58.00	54.90	51.70	48.40	45.00	41.40	37.60
	SDT	74.10	83.40	92.60	101.80	111.00	120.10	129.20	138.30
	KW	2.31	2.63	2.95	3.29	3.68	4.12	4.63	5.22
45 (7.22)	TCG	67.20	63.80	60.30	56.90	53.30	49.60	45.70	41.70
	SDT	75.80	84.90	94.10	103.20	112.30	121.40	130.40	139.40
	KW	2.31	2.64	2.97	3.32	3.71	4.15	4.66	5.25
50 (10.0)	TCG	73.70	70.00	66.20	62.40	58.50	54.50	50.40	46.10
	SDT	77.60	86.60	95.70	104.70	113.70	122.70	131.60	140.50
	KW	2.31	2.65	2.99	3.35	3.75	4.19	4.70	5.28
55 (12.78)	TCG	80.80	76.60	72.40	68.30	64.00	59.80	55.30	50.70
	SDT	79.50	88.40	97.30	106.20	115.20	124.00	132.90	141.60
	KW	2.31	2.66	3.02	3.39	3.79	4.24	4.74	5.32

See notes on page 81

CONDENSER ONLY RATINGS CONTINUED

SST °F (°C)		CONDENSER ENTERING AIR TEMPERATURES °F (°C)							
		55 (12.78)	65 (18.33)	75 (23.89)	85 (29.44)	95 (35.0)	105 (40.56)	115 (46.11)	125 (51.67)
24ABC661A**30									
30 (–1.11)	TCG	47.40	46.30	45.00	43.40	41.50	39.30	36.80	33.80
	SDT	70.70	80.00	89.20	98.50	107.70	116.90	126.00	135.10
	KW	1.95	2.35	2.79	3.30	3.90	4.61	5.45	6.46
35 (1.67)	TCG	52.30	51.10	49.60	47.90	45.90	43.40	40.70	37.40
	SDT	72.20	81.40	90.60	99.70	108.90	118.00	127.00	136.00
	KW	1.98	2.38	2.82	3.34	3.94	4.65	5.49	6.49
40 (4.44)	TCG	57.60	56.20	54.60	52.70	50.40	47.80	44.80	41.20
	SDT	73.90	82.90	92.00	101.00	110.10	119.10	128.10	137.00
	KW	2.01	2.41	2.86	3.38	3.99	4.70	5.54	6.53
45 (7.22)	TCG	63.20	61.70	59.90	57.80	55.30	52.40	49.00	45.20
	SDT	75.60	84.50	93.50	102.50	111.40	120.40	129.20	138.10
	KW	2.05	2.45	2.91	3.43	4.04	4.75	5.59	6.58
50 (10.0)	TCG	69.20	67.50	65.50	63.20	60.40	57.20	53.50	49.40
	SDT	77.40	86.20	95.10	104.00	112.80	121.70	130.40	139.10
	KW	2.09	2.50	2.96	3.49	4.10	4.82	5.65	6.64
55 (12.78)	TCG	75.60	73.70	71.40	68.80	65.70	62.20	58.20	53.60
	SDT	79.30	88.00	96.80	105.60	114.30	123.00	131.70	140.30
	KW	2.14	2.56	3.03	3.56	4.17	4.89	5.72	6.70

* AHRI listing applies only to systems shown in Combination Ratings table.

KW – Outdoor Unit Kilowatts Only.

SDT – Saturated Temperature Leaving Compressor (°F)

SST – Saturated Temperature Entering Compressor (°F/°C)

TCG – Gross Cooling Capacity (1000 Btuh)

GUIDE SPECIFICATIONS
GENERAL

System Description

Outdoor-mounted, air-cooled, split-system air conditioner unit suitable for ground or rooftop installation. Unit consists of a hermetic compressor, an air-cooled coil, propeller-type condenser fan, and a control box. Unit will discharge supply air upward as shown on contract drawings. Unit will be used in a refrigeration circuit to match up to a packaged fan coil or coil unit.

Quality Assurance

— Unit will be rated in accordance with the latest edition of AHRI Standard 210.

— Unit will be certified for capacity and efficiency, and listed in the latest AHRI directory.

— Unit construction will comply with latest edition of ANSI/ ASHRAE and with NEC.

— Unit will be constructed in accordance with UL standards and will carry the UL label of approval. Unit will have c-UL-us approval.

— Unit cabinet will be capable of withstanding Federal Test Method Standard No. 141 (Method 6061) 500-hr salt spray test.

— Air-cooled condenser coils will be leak tested at 150 psig and pressure tested at 450 psig.

— Unit constructed in ISO9001 approved facility.

Delivery, Storage, and Handling

— Unit will be shipped as single package only and is stored and handled per unit manufacturer's recommendations.

Warranty (for inclusion by specifying engineer)

— U.S. and Canada only.

PRODUCTS

Equipment

Factory assembled, single piece, air-cooled air conditioner unit. Contained within the unit enclosure is all factory wiring, piping, controls, compressor, refrigerant charge Puron® (R-410A), and special features required prior to field start-up.

Unit Cabinet

— Unit cabinet will be constructed of galvanized steel, bonderized, and coated with a powder coat paint.

Fans

— Condenser fan will be direct-drive propeller type, discharging air upward.

— Condenser fan motors will be totally enclosed, 1-phase type with class B insulation and permanently lubricated bearings. Shafts will be corrosion resistant.

— Fan blades will be statically and dynamically balanced.

— Condenser fan openings will be equipped with coated steel wire safety guards.

Compressor

— Compressor will be hermetically sealed.

— Compressor will be mounted on rubber vibration isolators.

Condenser Coil

— Condenser coil will be air cooled.

— Coil will be constructed of aluminum fins mechanically bonded to copper tubes which are then cleaned, dehydrated, and sealed.

Refrigeration Components

— Refrigeration circuit components will include liquid-line shutoff valve with sweat connections, vapor-line shutoff valve with sweat connections, system charge of Puron® (R-410A) refrigerant, and compressor oil.

— Unit will be equipped with high-pressure switch, low pressure switch and filter drier for Puron refrigerant.

Operating Characteristics

— The capacity of the unit will meet or exceed _____ Btuh at a suction temperature of _____ °F/°C. The power consumption at full load will not exceed _____ kW.

— Combination of the unit and the evaporator or fan coil unit will have a total net cooling capacity of _____ Btuh or greater at conditions of _____ CFM entering air temperature at the evaporator at _____ °F/°C wet bulb and _____ °F/°C dry bulb, and air entering the unit at _____ °F/°C.

— The system will have a SEER of _____ Btuh/watt or greater at DOE conditions.

Electrical Requirements

— Nominal unit electrical characteristics will be _____ v, single phase, 60 hz. The unit will be capable of satisfactory operation within voltage limits of _____ v to _____ v.

— Unit electrical power will be single point connection.

— Control circuit will be 24v.

Special Features

— Refer to section of this literature identifying accessories and descriptions for specific features and available enhancements.

SYSTEM DESIGN SUMMARY

1. Intended for outdoor installation with free air inlet and outlet. Outdoor fan external static pressure available is less than 0.01-in. wc.
2. Minimum outdoor operating air temperature for cooling mode without low-ambient operation accessory is 55°F (12.8°C).
3. Maximum outdoor operating air temperature is 125°F (51.7°C).
4. For reliable operation, unit should be level in all horizontal planes.
5. For interconnecting refrigerant tube lengths greater than 80 ft (23.4 m) and/or 35 ft (10.7 m) vertical differential, consult Residential Piping and Longline Guideline and Service Manual available from equipment distributor.
6. If any refrigerant tubing is buried, provide a 6 in. (152.4 mm) vertical rise to the valve connections at the unit. Refrigerant tubing lengths up to 36 in. (914.4 mm) may be buried without further consideration. Do not bury refrigerant lines longer than 36 in. (914.4 mm).
7. Use only copper wire for electric connection at unit. Aluminum and clad aluminum are not acceptable for the type of connector provided.
8. Do not apply capillary tube indoor coils to these units.
9. Factory-supplied filter drier must be installed.

Copyright 2011 Carrier Corp. • 7310 W. Morris St. • Indianapolis, IN 46231

Printed in U.S.A. Edition Date: 08/11

Catalog No: 24ABC6−3PD

Manufacturer reserves the right to change, at any time, specifications and designs without notice and without obligations.

Replaces: 24ABC6−2PD