25HHA4
Performance™ Series Heat Pump with Puron® Refrigerant 1–1/2 to 5 Nominal Tons

Carrier
turn to the experts

Product Data

Puron

Performance SERIES

Carrier Heat Pumps with Puron® refrigerant provide a collection of features unmatched by any other family of equipment. The 25HHA4 has been designed utilizing Carrier's Puron refrigerant. This environmentally sound refrigerant allows you to make a responsible decision in the protection of the earth's ozone layer.

NOTE: Ratings contained in this document are subject to change at any time. Always refer to the AHRI directory (www.ahridirectory.org) for the most up-to-date ratings information.

INDUSTRY LEADING FEATURES / BENEFITS

Energy Efficiency

- 14 - 15 SEER/11.5 - 12.5 EER/8.2 - 8.5 HSPF (Based on tested combinations)

Sound

- Levels as low as 69 dBA

Design Features

- Small footprint
- WeatherArmor™ cabinet
  - — All steel cabinet construction
  - — Mesh coil guard

Reliability, Quality and Toughness

- Scroll compressor
- Factory-supplied filter drier
- High pressure switch
- Low pressure switch
- Accumulator
- Line lengths up to 250' (76.2 m)
- Low ambient operation (down to -20°F/-28.9°C with low ambient accessories)

MODEL NUMBER NOMENCLATURE

1	2	3	4	5	6	7	8	9	10	11	12	13
N	N	A	A	A/N	N	N	N	A/N	A/N	A/N	N	N
2	5	H	H	A	4	1	8	A	0	0	3	0
Product Series		Product Family	Product Type	Major Series	SEER	Cooling Capacity		Variations	Open	Open	Voltage	Minor Series
25=HP		H = HP	H = Horizontal Discharge		4 = 14 SEER			A=Standard	0=Not Defined	0=Not Defined	3=208/230–1 5=208/230–3 6=460/3	0, 1, 2...

Use of the AHRI Certified TM Mark indicates a manufacturer's participation in the program For verification of certification for individual products, go to www.ahridirectory.org.

PHYSICAL DATA

UNIT SIZE – SERIES	18–30	24–30	30–30	36–30, 50, 60	48–30, 50, 60	60–30, 50, 60
COMPRESSOR TYPE	Scroll					
REFRIGERANT	Puron® (R–410A)					
Control	TXV (Puron Hard Shutoff)					
Charge lb (kg)	6.72 (3.05)	7.67 (3.48)	12.07 (5.47)	12.32 (5.59)	10.95 (4.97)	11.82 (5.36)
COND FAN	Propeller Type, Direct Drive					
Air Discharge	Horizontal					
Air Qty (CFM)	1285	1285	2615	2615	2785	2785
Motor HP	1/12	1/12	1/4	1/4	1/4	1/4
Motor RPM	800	800	800	800	800	800
COND COIL						
Face Area (Sq ft)	5.8	7.3	12.1	12.1	14.1	14.1
Fins per In.	20	20	20	20	20	20
Rows	2	2	2	2	2	2
Circuits	3	3	6	5	6	6
VALVE CONNECT. (In. ID)						
Vapor	5/8	3/4	3/4	7/8	7/8	7/8
Liquid	3/8					
REFRIGERANT TUBES* (In. OD)						
Rated Vapor*	5/8	3/4	3/4	7/8	7/8	1 1/8
Max Liquid Line†	3/8					

* Units are rated with 25 ft (7.6 m) of lineset length. See Vapor Line Sizing and Cooling Capacity Loss table when using other sizes and lengths of lineset.
Note: See unit Installation Instruction for proper installation.

† See *Liquid Line Sizing For Cooling Only Systems with Puron Refrigerant* tables.

VAPOR LINE SIZING AND COOLING CAPACITY LOSS

LONG LINE APPLICATION: An application is considered ”Long line” when the total equivalent tubing length exceeds 80 ft. (24.38 m) or when there is more than 20 ft. (6.09 m) vertical separation between indoor and outdoor units. These applications require additional accessories and system modifications for reliable system operation. The maximum allowable total equivalent length is up to 250 ft. (76.2 m). The maximum vertical separation is 200 ft. (60.96 m) when outdoor unit is above indoor unit, and up to 80 ft. (24.38 m) when the outdoor unit is below the indoor unit. Refer to Accessory Usage Guideline below for required accessories. See Longline Application Guideline for required piping and system modifications. Also, refer to the table below for the vapor tube diameters based on the total length to minimize the cooling capacity loss.

Unit Nominal Size (Btuh)	Maximum Liquid Line Diameters (In.) OD	Vapor Line Diameters (In.) OD	Cooling Capacity Loss (%) Total Equivalent Line Length ft. (m)								
			Standard Application		Long Line Application Requires Accessories						
			26 – 50 (7.9 – 15.2)	51 – 80 (15.5 – 24.4)	81 – 100 (24.7 – 30.5)	101 – 125 (30.8 – 38.1)	126 – 150 (38.4 – 45.7)	151 – 175 (46.0 – 50.3)	176 – 200 (53.6 – 60.0)	201 – 225 (61.3 – 68.6)	226 – 250 (68.9 – 76.2)
18,000 1 – Stage Puron HP	3/8	1/2	1	2	3	4	6	7	8	9	10
		5/8	0	0	1	1	1	2	2	3	3
24,000 1 – Stage Puron HP		5/8	0	1	1	2	3	3	4	4	5
		3/4	0	0	0	0	1	1	1	1	1
30,000 1 – Stage Puron HP		5/8	1	2	3	3	4	5	6	7	8
		3/4	0	0	1	1	1	2	2	2	3
		7/8	0	0	0	0	1	1	1	1	1
36,000 1 – Stage Puron HP		5/8	1	2	4	5	6	7	9	10	11
		3/4	0	0	1	1	2	2	3	3	4
		7/8	0	0	0	0	1	1	1	1	2
48,000 1 – Stage Puron HP		3/4	0	1	2	3	4	5	5	6	7
		7/8	0	0	1	1	2	2	2	3	3
60,000 1 – Stage Puron HP		3/4	1	2	4	5	6	7	9	10	11
		7/8	0	1	2	2	3	4	4	5	5
		1 – 1/8	0	0	0	1	1	1	1	1	1

Applications in this area are long line. Accessories are required as shown recommended on Long Line Application Guidelines

Applications in this area may have height restrictions that limit allowable total equivalent length, when outdoor unit is below indoor unit See Long Line Application Guidelines

ACCESSORIES

KIT NUMBER	KIT NAME	Unit Size (Voltage/Series)											
		018 (30)	024 (30)	030 (30)	036 (30)	036 (50)	036 (60)	048 (30)	048 (50)	048 (60)	060 (30)	060 (50)	060 (60)
KAACH1701AAA	Crankcase Heater	X	X	S	S	S	S						
KAACH1601AAA	Crankcase Heater							X	X		X	X	
KAACH1901AAA	Crankcase Heater									X			X
KAACS0201PTC	PTC Start Assist	X	X	X	X			X			X		
KAAFT0101AAA	Evaporator Freeze Stat	X	X	X	X	X	X	X	X	X	X	X	X
KAATD0101TDR	Time Delay Relay	X	X	X	X	X	X	X	X	X	X	X	X
KHAIR0201AAA	Isolation Relay	X	X	X	X	X	X	X	X	X	X	X	X
KSALA0301410	Low Ambient Kit	X	X	X	X	X	X	X	X	X	X	X	X
KSALA0801AAA	MotorMaster® 230v	X	X	X	X	X		X		X	X		X
KSALA0901AAA	MotorMaster® 460v						X		X			X	
53DS–900–––070	Wind Baffle	X											
53DS–900–––087	Wind Baffle		X										
53DS–900–––071	Wind Baffle			X	X	X	X						
53DS–900–––088	Wind Baffle							X	X	X	X	X	X
53DS–900–––077	Wall Mounting Kit	X	X										
53DS–900–––078	Wall Mounting Kit			X	X	X	X	X	X	X	X	X	X
KSASH2301COP	Sound Blanket Kit			X	X	X	X						
KSASH2401COP	Sound Blanket Kit							X	X	X	X	X	X
KHALS0401LLS	Solenoid Valve Kit	X	X	X	X	X	X	X	X	X	X	X	X
KSAHS1501AAA	Capacitor Relay Start Assist	X	X	X	X			X			X		
KSACY0101AAA	Cycle Protector	X	X	X	X	X	X	X	X	X	X	X	X

X = Accessory

ACCESSORY THERMOSTATS

PART NUMBER	DESCRIPTION
TP-WEM01	Côr™ Thermostat
TP-PRH01-A	edge™ Programmable Relative Humidity Thermostat
TP-PHP01	edge™ Programmable Thermostat
TP-NRH01	edge™ Non-Programmable Relative Humidity Thermostat
TP-NHP01	edge™ Non-Programmable Thermostat
TC-WHS01	Wi-Fi® Thermostat
TC-PHP01	Programmable Thermostat
TC-NHP01	Non-Programmable Thermostat
TCSNHP01	Non-Programmable Standard Screen Thermostat

THERMOSTAT ACCESSORIES		
PART NUMBER	**DESCRIPTION**	**THERMOSTATS USED WITH**
TP-EXP	edge™ EXP® Card	Programmable edge™ thermostats
TSTATCCSEN01-B	Outdoor Air Temperature Sensor	TP-Pxx, TP-Nxx
TSTATXXCNV10	Thermostat Conversion Kit (4 to 5 wire) - 10 pack	All Carrier® branded thermostats
TX-MBP01	Medium Decorative Backplate	TC-Nxx
TX-LBP01	Large Decorative Backplate	TP-Pxx, TP-Nxx, TC-Pxx

ACCESSORY USAGE GUIDELINE

Accessory	REQUIRED FOR LOW–AMBIENT COOLING APPLICATIONS (Below 55°F / 12.8°C)	REQUIRED FOR LONG LINE APPLICATIONS* (Over 80 ft. / 24.38 m)	REQUIRED FOR SEA COAST APPLICATIONS (Within 2 miles / 3.22 km)
Ball Bearing Fan Motor	Standard	Standard	Standard
Compressor Start Assist Capacitor and Relay	Yes	Yes	No
Crankcase Heater	Yes	Yes	No
Evaporator Freeze Thermostat	Yes	No	No
Isolation Relay	Yes	No	No
Liquid Line Solenoid Valve	No	See Long–Line Application Guideline	No
Low Ambient Pressure Switch or MotorMaster® Controller	Yes	No	No

* For tubing line sets between 80 and 200 ft. (24.38 and 60.96 m) and/or 20 ft. (6.09 m) vertical differential, refer to Residential Split–System Longline Application Guideline.

Accessory Description and Usage (Listed Alphabetically)

1. Ball-Bearing Fan Motor

A fan motor with ball bearings which permits speed reduction while maintaining bearing lubrication.

Usage Guideline:

Required on all units when using MotorMaster®

2. Compressor Start Assist - Capacitor and Relay

Start capacitor and relay gives a ”hard” boost to compressor motor at each start up.

Usage Guideline:

Required for reciprocating compressors in the following applications:

- Long line
- Low ambient cooling
- Hard shut off expansion valve on indoor coil
- Liquid line solenoid on indoor coil

Required for single-phase scroll compressors in the following applications:

- Long line
- Low ambient cooling

Suggested for all compressors in areas with a history of low voltage problems.

3. Crankcase Heater

An electric resistance heater which mounts to the base of the compressor to keep the lubricant warm during off cycles. Improves compressor lubrication on restart and minimizes the chance of liquid slugging.

Usage Guideline:

Required in low ambient cooling applications.

Required in long line applications.

Suggested in all commercial applications.

4. Evaporator Freeze Thermostat

An SPST temperature-actuated switch that stops unit operation when evaporator reaches freeze-up conditions.

Usage Guideline:

Required when low ambient kit has been added.

5. Isolation Relay

An SPDT relay that switches the low-ambient controller out fo the outdoor fan motor circuit when the heat pump switches to heating mode.

Usage Guideline:

Required on all heat pumps where low-ambient kit has been added.

6. Liquid-Line Solenoid Valve (LLS)

An electrically operated shutoff valve which stops and starts refrigerant liquid flow in response to compressor operation. It is to be installed at the outdoor unit to control refrigerant off cycle migration in the heating mode.

Usage Guideline:

An LLS is required in all long line heat pump applications to control refrigerant off cycle migration in the heating mode. See Long Line Guideline.

7. Low-Ambient Pressure Switch Kit

A long life pressure switch which is mounted to outdoor unit service valve. It is designed to cycle the outdoor fan motor in order to maintain head pressure within normal operating limits. The control will maintain working head pressure at low-ambient temperatures down to 0°F (-18°C) when properly installed.

Usage Guideline:

A Low-Ambient Pressure Switch or MotorMaster® Low-Ambient Controller must be used when cooling operation is used at outdoor temperatures below 55°F (12.8°C).

Suggested for all commercial applications.

8. MotorMaster Low-Ambient Controller

A fan-speed control device activated by a temperature sensor, designed to control condenser fan motor speed in response to the saturated condensing temperatures down to -20°F (-28.9°C), it maintains condensing temperature at -100°F +/- 10°F (37.8°C + -6°C)

Usage Guideline:

A MotorMaster Low-Ambient Controller or Low-Ambient Pressure Switch must be used when cooling operation is used at outdoor temperatures below 55°F (12.8°C).

Suggested for all commercial applications.

ELECTRICAL DATA

UNIT SIZE – voltage,series	V/PH	OPER VOLTS*		COMPR		FAN	MCA	MAX FUSE** or CKT BRK AMPS
		MAX	MIN	LRA	RLA	FLA		
18–30	208/230/1	253	197	48.0	9.0	0.50	11.8	20
24–30				58.3	12.8	0.50	16.5	25
30–30				64.0	12.8	1.20	17.2	30
36–30				77.0	14.2	1.20	19.0	30
48–30				117.0	21.8	1.45	28.8	50
60–30				144.2	25.5	1.45	33.4	50
36–50	208/230/3	253	197	71.0	9.3	1.20	12.8	20
48–50				83.1	13.7	1.45	18.6	30
60–50				110.0	17.1	1.45	22.9	40
36–60	460/3	506	414	38.0	5.6	0.60	7.6	15
48–60				41.0	6.2	0.80	8.6	15
60–60				52.0	7.8	0.80	10.6	15

LEGEND:

FLA – Full Load Amps
HACR – Heating, Air Conditioning, Refrigeration
LRA – Locked Rotor Amps
NEC – National Electrical Code
RLA – Rated Load Amps (compressor)
* Permissible limits of the voltage range at which the unit will operate satisfactorily
** Time–Delay fuse.
Complies with 2007 requirements of ASHRAE Standards 90.1

A-WEIGHTED SOUND POWER (dBA)

Unit Size	Standard Rating (dBA)	Typical Octave Band Spectrum (dBA, without tone adjustment)						
		125	250	500	1000	2000	4000	8000
18	70	53.5	59.5	61.5	65.5	59.5	55.5	46.0
24	69	53.0	63.0	63.0	62.5	59.0	54.0	50.5
30	72	58.0	61.0	64.0	66.5	64.0	63.5	57.0
36	71	60.5	60.5	64.0	65.5	64.0	62.0	56.5
48	73	60.0	59.0	65.0	68.0	64.0	61.0	55.5
60	74	70.0	62.0	65.0	66.0	64.5	64.0	57.5

NOTE: Tested in accordance with AHRI Standard 270–08 (not listed in AHRI).

A-WEIGHTED SOUND POWER (dBA) WITH ACCESSORY SOUND SHIELD

Unit Size	Standard Rating (dBA)	Typical Octave Band Spectrum (dBA, without tone adjustment)						
		125	250	500	1000	2000	4000	8000
18	N/A	–	–	–	–	–	–	–
24	N/A	–	–	–	–	–	–	–
30	71	57.5	61.0	63.5	65.5	63.0	63.5	57.0
36	70	59.5	60.5	63.0	64.5	63.0	61.5	56.0
48	72	56.5	59.5	63.5	67.5	64.0	60.5	55.0
60	72	62.0	60.5	64.5	65.0	64.0	63.5	54.5

NOTES:
Tested in accordance with AHRI Standard 270–08 (not listed in AHRI).
Accessory sound shield will not accommodate unit sizes 18 and 24.

CHARGING SUBCOOLING (TXV-TYPE EXPANSION DEVICE)

UNIT SIZE–SERIES	REQUIRED SUBCOOLING °F (°C)
18	12 (6.7)
24	14 (7.8))
30	11 (6.1)
36	14 (7.8)
48	11 (6.1)
60	12 (6.7)

DIMENSIONS - ENGLISH

UNIT	SERIES	ELECTRICAL CHARACTERISTICS				A	B	C	D	E	F	G	H	J	K	L	M	N	P	OPERATING WEIGHT(lbs)	SHIPPING WEIGHT(lbs)	SHIPPING DIMENSIONS (L x W x H)
25HHA418	0	X	O	O	O	25 1/8"	36 15/16"	14 9/16"	16"	23 7/16"	17 3/16"	17 1/8"	22 1/16"	13"	6 5/8"	11 1/4"	5/8"	2 7/8"	4 15/16"	150	170	42 15/16" X 18" X 28 1/8"
25HHA424	0	X	O	O	O	31 1/8"	36 15/16"	14 9/16"	16"	23 7/16"	17 3/16"	23 1/8"	28 1/16"	14"	6 3/4"	11 5/8"	3/4"	2 7/8"	4 15/16"	161	181	42 15/16" X 18" X 34 1/8"
25HHA430	0	X	O	O	O	37 1/8"	44 1/2"	17 1/16"	18 7/16"	30 1/2"	19 5/8"	29 1/8"	34 1/16"	13 11/16"	8 1/8"	15 7/8"	3/4"	3 3/8"	5 1/2"	196	226	50 1/2" X 20 1/2" X 40 1/8"
25HHA436	0	X	O	X	X	37 1/8"	44 1/2"	17 1/16"	18 7/16"	30 1/2"	19 5/8"	29 1/8"	34 1/16"	13 11/16"	8 1/8"	15 7/8"	7/8"	3 3/8"	5 1/2"	197	227	50 1/2" X 20 1/2" X 40 1/8"
25HHA448	0	X	O	X	X	43 1/8"	44 1/2"	17 1/16"	18 7/16"	30 1/2"	19 5/8"	35 1/8"	40 1/16"	14 1/2"	8 1/2"	18 7/8"	7/8"	3 3/8"	5 1/2"	246	276	50 1/2" X 20 1/2" X 46 1/8"
25HHA460	0	X	O	X	X	43 1/8"	44 1/2"	17 1/16"	18 7/16"	30 1/2"	19 5/8"	35 1/8"	40 1/16"	14 1/2"	8 1/2"	18 7/8"	7/8"	3 3/8"	5 1/2"	258	288	50 1/2" X 20 1/2" X 46 1/8"
		208-230-1-60	230-1-60	208/230-3-60	460-3-60																	

X = YES
O = NO

1. REQUIRED CLEARANCES: WITH COIL FACING WALL: ALLOW 6" MINIMUM CLEARANCE ON COIL SIDE AND COIL END AND 20" MINIMUM CLEARANCE ON FAN SIDE. ALLOW 18" MINIMUM CLEARANCE ON COMPRESSOR END FOR SERVICE. WITH FAN FACING WALL: ALLOW 8" MINIMUM CLEARANCE ON COIL SIDE AND COIL END AND 20" MINIMUM CLEARANCE ON FAN SIDE. ALLOW 18" MINIMUM CLEARANCE ON COMPRESSOR END FOR SERVICE. WITH MULTI-UNIT APPLICATION: ALLOW 24" MINIMUM CLEARANCE BETWEEN MULTIPLE UNITS. ARRANGE UNITS SO DISCHARGE OF ONE DOES NOT ENTER INLET OF ANOTHER. WHEN INSTALLING MULTIPLE UNITS, ENSURE THE DISCHARGE AIR FROM ONE UNIT IS NOT DRAWN INTO ANOTHER UNIT. WHEN INSTALLING SINGLE OR MULTIPLE UNITS IN AN ALCOVE, ROOF WELL, OR PARTIALLY ENCLOSED AREA, ENSURE THERE IS ADEQUATE VENTILATION TO PREVENT RECIRCULATION OF DISCHARGE AIR.
2. MINIMUM OUTDOOR OPERATING AMBIENT IN COOLING MODE IS 55°F, MAX. 125°F.
3. SERIES DESIGNATION IS THE 13TH POSITION OF THE UNIT MODEL NUMBER.
4. CENTER OF GRAVITY
5. ALL DIMENSIONS ARE IN "INCHES" UNLESS NOTED.

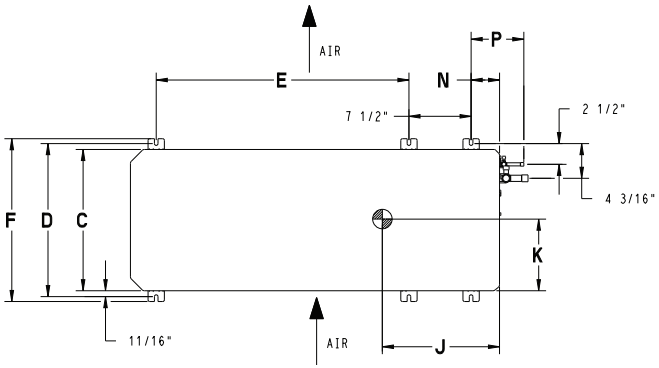

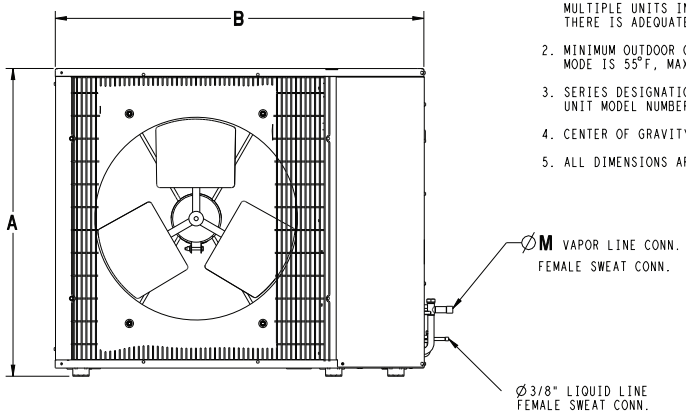

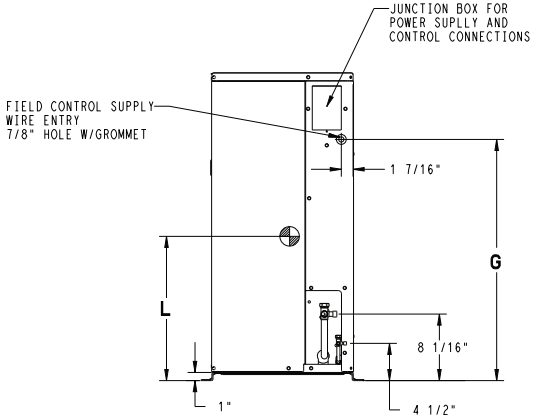

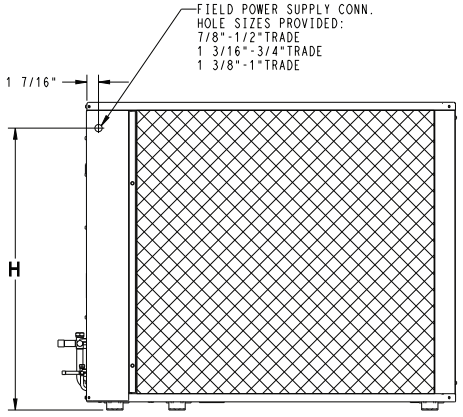

UNIT SIZE	MINIMUM MOUNTING PAD DIMENSIONS
18,24	23" X 42"
30,36,48,60	24" X 50"

DIMENSIONS - SI

UNIT	SERIES	ELECTRICAL CHARACTERISTICS				A	B	C	D	E	F	G	H	J	K	L	M	N	P	OPERATING WEIGHT(KG)	SHIPPING WEIGHT(KG)	SHIPPING DIMENSIONS (L x W x H)
25HHA418	0	X	O	O	O	638.0	938.0	370.0	406.0	595.5	436.0	435.2	559.8	330.2	168.3	285.8	15.9	73.0	126.2	68.0	77.1	1090.2 X 457.7 X 714.3
25HHA424	0	X	O	O	O	790.4	938.0	370.0	406.0	595.5	436.0	587.6	712.2	355.6	171.5	295.3	19.1	73.0	126.2	73.0	82.1	1090.2 X 457.7 X 866.7
25HHA430	0	X	O	O	O	942.8	1130.0	433.0	469.0	774.5	499.0	740.0	864.6	347.7	206.4	403.2	19.1	86.0	139.2	88.9	102.5	1282.7 X 520.7 X 1019.1
25HHA436	0	X	O	X	X	942.8	1130.0	433.0	469.0	774.5	499.0	740.0	864.6	347.7	206.4	403.2	22.2	86.0	139.2	89.4	103.0	1282.7 X 520.7 X 1019.1
25HHA448	0	X	O	X	X	1095.2	1130.0	433.0	469.0	774.5	499.0	892.4	1017.0	368.3	215.9	479.4	22.2	86.0	139.2	111.6	125.2	1282.7 X 520.7 X 1171.5
25HHA460	0	X	O	X	X	1095.2	1130.0	433.0	469.0	774.5	499.0	892.4	1017.0	368.3	215.9	479.4	22.2	86.0	139.2	117.0	130.6	1282.7 X 520.7 X 1171.5
		208-230-1-60	230-1-60	208/230-3-60	460-3-60																	

X = YES
O = NO

1. REQUIRED CLEARANCES: WITH COIL FACING WALL: ALLOW 152.4 MINIMUM CLEARANCE ON COIL SIDE AND COIL END AND 504.0 MINIMUM CLEARANCE ON FAN SIDE. ALLOW 457.2 MINIMUM CLEARANCE ON COMPRESSOR END FOR SERVICE. WITH FAN FACING WALL: ALLOW 203.2 MINIMUM CLEARANCE ON COIL SIDE AND COIL END AND 504.0 MINIMUM CLEARANCE ON FAN SIDE. ALLOW 457.2 MINIMUM CLEARANCE ON COMPRESSOR END FOR SERVICE. WITH MULTI-UNIT APPLICATION: ALLOW 609.6 MINIMUM CLEARANCE BETWEEN MULTIPLE UNITS. ARRANGE UNITS SO DISCHARGE OF ONE DOES NOT ENTER INLET OF ANOTHER. WHEN INSTALLING MULTIPLE UNITS, ENSURE THE DISCHARGE AIR FROM ONE UNIT IS NOT DRAWN INTO ANOTHER UNIT. WHEN INSTALLING SINGLE OR MULTIPLE UNITS IN AN ALCOVE, ROOF WELL, OR PARTIALLY ENCLOSED AREA, ENSURE THERE IS ADEQUATE VENTILATION TO PREVENT RECIRCULATION OF DISCHARGE AIR.
2. MINIMUM OUTDOOR OPERATING AMBIENT IN COOLING MODE IS 12.8°C, MAX. 51.7°C.
3. SERIES DESIGNATION IS THE 13TH POSITION OF THE UNIT MODEL NUMBER.
4. CENTER OF GRAVITY
5. ALL DIMENSIONS ARE IN "MM" UNLESS NOTED.

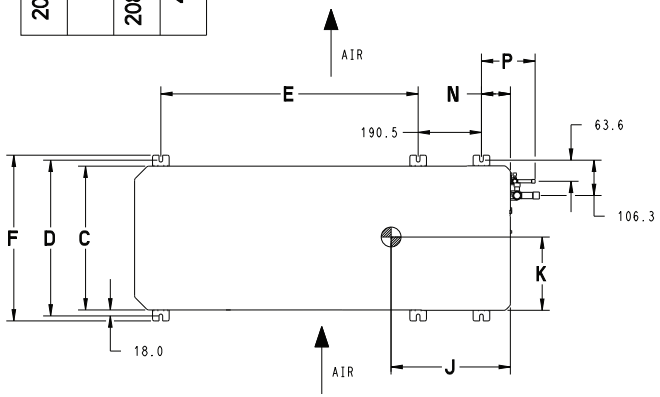

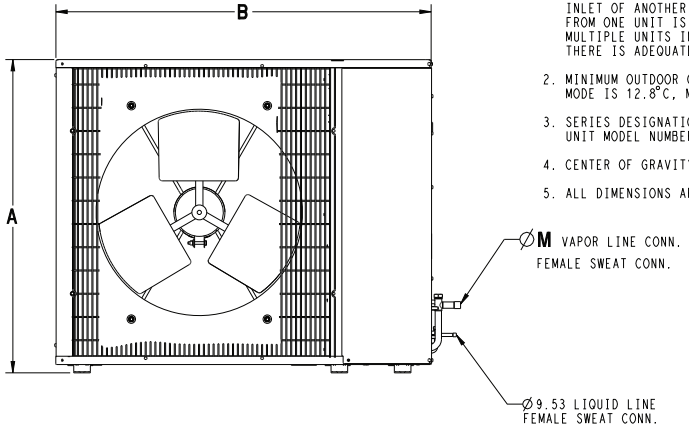

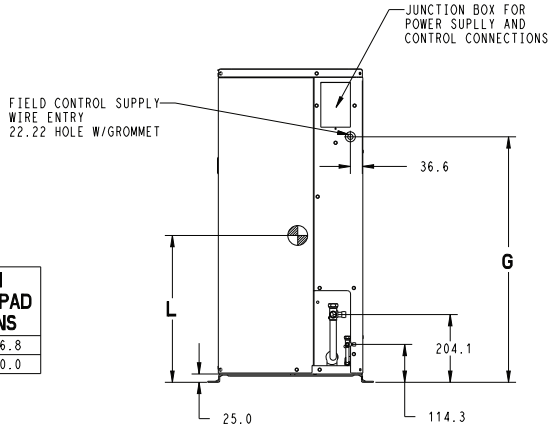

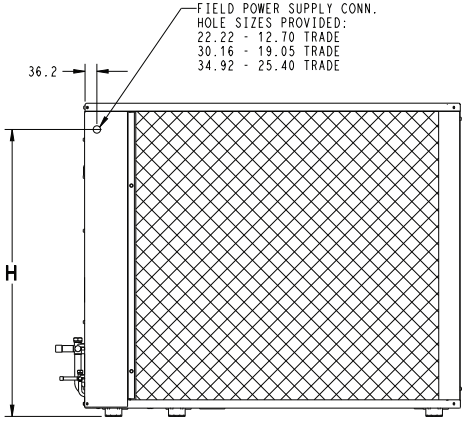

UNIT SIZE	MINIMUM MOUNTING PAD DIMENSIONS
18,24	584.2 X 1066.8
30,36,48,60	609.6 X 1270.0

BALANCE POINT WORKSHEET

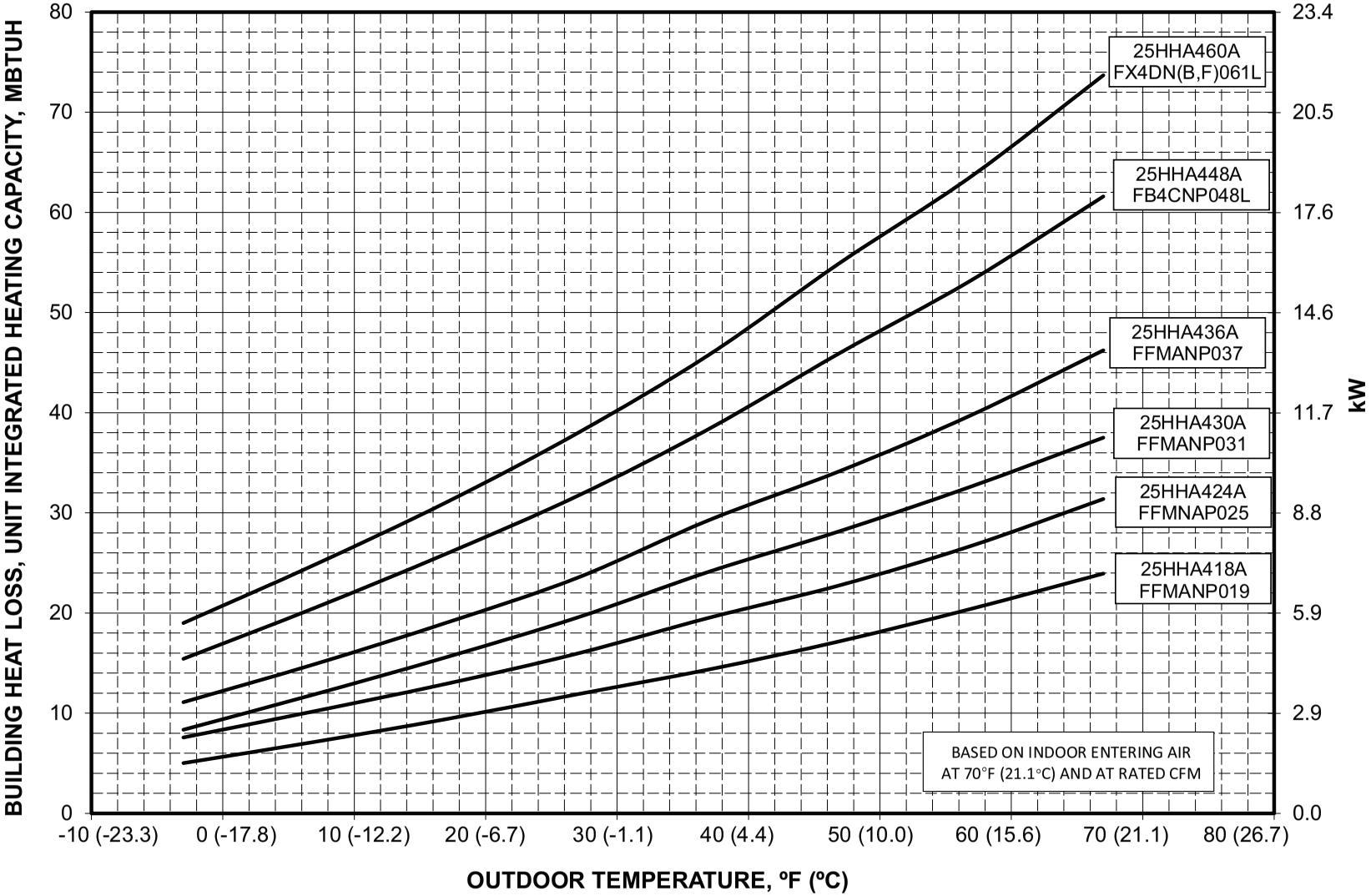

TESTED AHRI COMBINATION RATINGS*

NOTE: Ratings contained in this document are subject to change at any time.

For AHRI ratings certificates, please refer to the AHRI directory www.ahridirectory.org

Additional ratings and system combinations can be accessed via the Carrier database at: www.MyCarrierRatings.com

For performance data at specific application &/or design conditions with various indoor unit combinations, the equipment performance calculator can be accessed at : http://rpmob.wrightsoft.com/

Model Number	Indoor Coil Model Number	Furnace Model Number	Cooling Capacity	EER	SEER	High Temp		HSPF	Low Temp	
						Capacity 47˚F (8˚C)	COP		Capacity 17˚F (–8˚C)	COP
25HHA418A**30	FFMANP019		18,000	11.5	14	17,200	3.80	8.2	10,400	2.48
25HHA424A**30	FFMANP025		23,400	11.5	14	22,800	3.74	8.2	13,800	2.50
25HHA430A**30	FFMANP031		28,800	12.5	15	28,200	4.02	8.5	17,500	2.62
25HHA436A**30	FFMANP037		34,200	12.0	14	34,200	3.94	8.5	21,000	2.60
25HHA436A**50	FFMANP037		34,200	12.0	14	34,200	3.94	8.5	21,000	2.60
25HHA436A**60	FFMANP037		34,200	12.0	14	34,200	3.94	8.5	21,000	2.60
25HHA448A**30	FB4CNP048L		45,500	11.5	14	46,000	3.66	8.2	29,000	2.56
25HHA448A**50	FB4CNP048L		45,500	11.5	14	46,000	3.66	8.2	29,000	2.56
25HHA448A**60	FB4CNP048L		45,500	11.5	14	46,000	3.66	8.2	29,000	2.56
25HHA460A**30	FX4DN(B,F)061L		55,000	11.5	14	55,000	3.78	8.2	33,600	2.62
25HHA460A**50	FX4DN(B,F)061L		55,000	11.5	14	55,000	3.78	8.2	33,600	2.62
25HHA460A**60	FX4DN(B,F)061L		55,000	11.5	14	55,000	3.78	8.2	33,600	2.62

EER — Energy Efficiency Ratio
SEER — Seasonal Energy Efficiency Ratio
TXV — Thermostatic Expansion Valve

NOTES:

1. Ratings are net values reflecting the effects of circulating fan motor heat. Supplemental electric heat is not included.
2. Tested outdoor/indoor combinations have been tested in accordance with DOE test procedures for central air conditioners. Ratings for other combinations are determined under DOE computer simulation procedures.
3. Determine actual CFM values obtainable for your system by referring to fan performance data in fan coil or furnace coil literature.
4. Do not apply with capillary tube coils as performance and reliability are significantly affected.

DETAILED COOLING CAPACITIES

Evaporator Air		CONDENSER ENTERING AIR TEMPERATURES °F (°C)																	
		75 (23.9)			85 (29.4)			95 (35)			105 (40.6)			115 (46.1)			125 (51.7)		
CFM	EWB °F (°C)	Capacity MBtuh†		Total System KW**	Capacity MBtuh†		Total System KW**	Capacity MBtuh†		Total System KW**	Capacity MBtuh†		Total System KW**	Capacity MBtuh†		Total System KW**	Capacity MBtuh†		Total System KW**
		Total	Sens‡		Total	Sens‡		Total	Sens‡		Total	Sens‡		Total	Sens‡		Total	Sens‡	
25HHA418A30 Outdoor Section With FFMANP019 Indoor Section**																			
525	72 (22.2)	21.77	11.33	1.24	20.66	10.90	1.40	19.51	10.46	1.57	18.30	10.01	1.75	17.02	9.54	1.96	15.68	9.06	2.19
	67 (19.4)	19.71	13.86	1.23	18.70	13.43	1.38	17.64	12.99	1.55	16.54	12.54	1.73	15.37	12.07	1.94	14.15	11.58	2.17
	63 (17.2)	18.24	13.32	1.22	17.30	12.89	1.37	16.31	12.45	1.53	15.28	11.99	1.72	14.19	11.52	1.92	13.05	11.04	2.15
	62 (16.7)	17.90	16.38	1.22	17.00	15.96	1.37	16.05	15.52	1.53	15.09	15.01	1.72	14.22	14.22	1.92	13.29	13.29	2.16
	57 (13.9)	17.35	17.35	1.21	16.63	16.63	1.37	15.87	15.87	1.53	15.06	15.06	1.72	14.20	14.20	1.92	13.27	13.27	2.16
600	72 (22.2)	22.25	11.92	1.26	21.10	11.49	1.41	19.88	11.04	1.58	18.62	10.59	1.77	17.29	10.11	1.98	15.91	9.62	2.21
	67 (19.4)	20.16	14.81	1.24	19.11	14.37	1.40	18.00	13.92	1.57	16.85	13.47	1.75	15.64	12.99	1.96	14.38	12.49	2.19
	63 (17.2)	18.67	14.21	1.24	17.69	13.77	1.39	16.66	13.32	1.55	15.58	12.86	1.74	14.46	12.38	1.94	13.28	11.88	2.17
	62 (16.7)	18.38	17.69	1.23	17.47	17.25	1.39	16.60	16.60	1.55	15.73	15.73	1.74	14.80	14.80	1.94	13.81	13.81	2.18
	57 (13.9)	18.16	18.16	1.23	17.39	17.39	1.39	16.57	16.57	1.55	15.71	15.71	1.74	14.78	14.78	1.94	13.79	13.79	2.18
675	72 (22.2)	22.63	12.49	1.27	21.42	12.05	1.43	20.17	11.60	1.60	18.87	11.13	1.79	17.50	10.65	2.00	16.07	10.16	2.23
	67 (19.4)	20.52	15.72	1.26	19.42	15.28	1.41	18.28	14.83	1.58	17.10	14.36	1.77	15.85	13.88	1.97	14.56	13.37	2.20
	63 (17.2)	19.01	15.06	1.25	17.99	14.62	1.40	16.93	14.16	1.57	15.82	13.69	1.75	14.66	13.20	1.96	13.46	12.69	2.19
	62 (16.7)	18.87	18.87	1.25	18.06	18.06	1.40	17.19	17.19	1.57	16.27	16.27	1.76	15.28	15.28	1.97	14.24	14.24	2.20
	57 (13.9)	18.85	18.85	1.25	18.03	18.03	1.40	17.16	17.16	1.57	16.24	16.24	1.76	15.26	15.26	1.96	14.22	14.22	2.20

Evaporator Air		CONDENSER ENTERING AIR TEMPERATURES °F (°C)																	
		75 (23.9)			85 (29.4)			95 (35)			105 (40.6)			115 (46.1)			125 (51.7)		
CFM	EWB °F (°C)	Capacity MBtuh†		Total System KW**	Capacity MBtuh†		Total System KW**	Capacity MBtuh†		Total System KW**	Capacity MBtuh†		Total System KW**	Capacity MBtuh†		Total System KW**	Capacity MBtuh†		Total System KW**
		Total	Sens‡		Total	Sens‡		Total	Sens‡		Total	Sens‡		Total	Sens‡		Total	Sens‡	
25HHA424A30 Outdoor Section With FFMANP025 Indoor Section**																			
700	72 (22.2)	28.58	14.75	1.68	27.22	14.23	1.87	25.78	13.70	2.09	24.23	13.12	2.32	22.56	12.51	2.58	20.77	11.87	2.87
	67 (19.4)	25.98	18.17	1.63	24.74	17.65	1.82	23.40	17.10	2.03	21.96	16.51	2.27	20.41	15.89	2.53	18.76	15.23	2.82
	63 (17.2)	24.11	17.49	1.60	22.95	16.97	1.79	21.70	16.41	2.00	20.34	15.81	2.24	18.88	15.19	2.50	17.32	14.52	2.80
	62 (16.7)	23.68	21.57	1.60	22.57	21.05	1.79	21.38	20.49	2.00	20.13	19.94	2.24	18.94	18.94	2.51	17.66	17.66	2.80
	57 (13.9)	23.03	23.03	1.59	22.13	22.13	1.78	21.15	21.15	2.00	20.08	20.08	2.24	18.91	18.91	2.51	17.63	17.63	2.80
800	72 (22.2)	29.13	15.49	1.72	27.73	14.97	1.91	26.22	14.42	2.13	24.61	13.83	2.36	22.88	13.21	2.62	21.03	12.56	2.90
	67 (19.4)	26.50	19.36	1.66	25.20	18.83	1.86	23.81	18.27	2.07	22.32	17.68	2.31	20.73	17.05	2.57	19.02	16.39	2.85
	63 (17.2)	24.61	18.60	1.63	23.40	18.06	1.83	22.09	17.50	2.04	20.69	16.90	2.27	19.19	16.27	2.54	17.58	15.59	2.83
	62 (16.7)	24.27	23.23	1.63	23.14	22.67	1.82	22.03	22.03	2.04	20.89	20.89	2.28	19.64	19.64	2.55	18.29	18.29	2.84
	57 (13.9)	24.01	24.01	1.63	23.05	23.05	1.82	22.00	22.00	2.04	20.86	20.86	2.28	19.61	19.61	2.55	18.26	18.26	2.84
900	72 (22.2)	29.55	16.19	1.76	28.10	15.66	1.95	26.55	15.10	2.16	24.89	14.51	2.40	23.11	13.89	2.65	21.21	13.23	2.94
	67 (19.4)	26.89	20.50	1.70	25.55	19.97	1.89	24.12	19.40	2.11	22.60	18.81	2.34	20.97	18.17	2.60	19.23	17.49	2.89
	63 (17.2)	24.99	19.66	1.67	23.74	19.12	1.86	22.40	18.55	2.07	20.97	17.95	2.31	19.43	17.30	2.57	17.79	16.60	2.86
	62 (16.7)	24.83	24.83	1.66	23.84	23.84	1.86	22.73	22.73	2.08	21.53	21.53	2.32	20.22	20.22	2.58	18.80	18.80	2.88
	57 (13.9)	24.83	24.83	1.66	23.81	23.81	1.86	22.70	22.70	2.08	21.50	21.50	2.32	20.19	20.19	2.58	18.78	18.78	2.88

See notes on pg. 13

DETAILED COOLING CAPACITIES(CONT.)

Evaporator Air		CONDENSER ENTERING AIR TEMPERATURES °F (°C)																	
		75 (23.9)			85 (29.4)			95 (35)			105 (40.6)			115 (46.1)			125 (51.7)		
CFM	EWB °F (°C)	Capacity MBtuh†		Total System KW**	Capacity MBtuh†		Total System KW**	Capacity MBtuh†		Total System KW**	Capacity MBtuh†		Total System KW**	Capacity MBtuh†		Total System KW**	Capacity MBtuh†		Total System KW**
		Total	Sens‡		Total	Sens‡		Total	Sens‡		Total	Sens‡		Total	Sens‡		Total	Sens‡	
25HHA430A30 Outdoor Section With FFMANP031 Indoor Section**																			
875	72 (22.2)	35.68	17.88	1.86	33.43	17.10	2.05	31.12	16.32	2.26	28.69	15.50	2.51	26.11	14.65	2.78	23.35	13.76	3.09
	67 (19.4)	32.54	22.42	1.87	30.52	21.65	2.06	28.40	20.86	2.28	26.19	20.04	2.52	23.85	19.19	2.80	21.34	18.27	3.11
	63 (17.2)	30.26	21.54	1.88	28.41	20.79	2.07	26.46	20.00	2.29	24.39	19.18	2.53	22.20	18.31	2.81	19.89	17.39	3.12
	62 (16.7)	29.91	26.93	1.88	28.23	28.08	2.07	26.61	26.61	2.29	24.86	24.86	2.53	22.99	22.99	2.80	20.94	20.94	3.11
	57 (13.9)	29.67	29.67	1.88	28.17	28.17	2.07	26.57	26.57	2.29	24.82	24.82	2.53	22.96	22.96	2.80	20.91	20.91	3.11
1000	72 (22.2)	36.23	18.82	1.88	33.89	18.03	2.07	31.51	17.24	2.29	29.00	16.41	2.53	26.34	15.55	2.80	23.51	14.63	3.11
	67 (19.4)	33.09	23.97	1.90	30.99	23.19	2.09	28.80	22.39	2.30	26.52	21.55	2.55	24.12	20.67	2.82	21.59	19.69	3.13
	63 (17.2)	30.81	23.00	1.90	28.88	22.23	2.10	26.86	21.42	2.31	24.72	20.57	2.56	22.50	19.68	2.83	20.18	20.07	3.14
	62 (16.7)	30.86	30.86	1.90	29.25	29.25	2.10	27.52	27.52	2.31	25.67	25.67	2.55	23.69	23.69	2.82	21.51	21.51	3.13
	57 (13.9)	30.82	30.82	1.90	29.21	29.21	2.10	27.48	27.48	2.31	25.63	25.63	2.55	23.66	23.66	2.82	21.49	21.49	3.13
1125	72 (22.2)	36.64	19.72	1.91	34.23	18.92	2.10	31.79	18.11	2.31	29.23	17.28	2.55	26.50	16.40	2.83	23.60	15.48	3.14
	67 (19.4)	33.51	25.48	1.92	31.35	24.68	2.11	29.09	23.85	2.33	26.78	22.99	2.57	24.36	22.04	2.85	21.98	21.98	3.15
	63 (17.2)	31.23	24.39	1.93	29.25	23.60	2.12	27.17	22.77	2.34	25.00	21.89	2.58	22.78	20.92	2.86	20.60	20.60	3.17
	62 (16.7)	31.80	31.80	1.93	30.09	30.09	2.12	28.26	28.26	2.33	26.32	26.32	2.57	24.24	24.24	2.85	21.96	21.96	3.15
	57 (13.9)	31.76	31.76	1.93	30.05	30.05	2.12	28.22	28.22	2.33	26.29	26.29	2.57	24.21	24.21	2.85	21.94	21.94	3.15

Evaporator Air		CONDENSER ENTERING AIR TEMPERATURES °F (°C)																	
		75 (23.9)			85 (29.4)			95 (35)			105 (40.6)			115 (46.1)			125 (51.7)		
CFM	EWB °F (°C)	Capacity MBtuh†		Total System KW**	Capacity MBtuh†		Total System KW**	Capacity MBtuh†		Total System KW**	Capacity MBtuh†		Total System KW**	Capacity MBtuh†		Total System KW**	Capacity MBtuh†		Total System KW**
		Total	Sens‡		Total	Sens‡		Total	Sens‡		Total	Sens‡		Total	Sens‡		Total	Sens‡	
25HHA436A30 Outdoor Section With FFMANP037 Indoor Section**																			
1050	72 (22.2)	41.22	20.81	2.31	39.23	20.08	2.55	37.15	19.33	2.83	34.92	18.53	3.13	32.56	17.71	3.48	30.04	16.84	3.88
	67 (19.4)	37.36	25.73	2.29	35.55	25.00	2.53	33.64	24.24	2.80	31.63	23.45	3.11	29.48	22.63	3.46	27.20	21.76	3.86
	63 (17.2)	34.58	24.71	2.27	32.91	23.98	2.52	31.14	23.22	2.79	29.27	22.44	3.09	27.28	21.61	3.44	25.15	20.73	3.84
	62 (16.7)	34.03	30.64	2.27	32.44	29.92	2.52	30.80	29.14	2.79	29.18	29.18	3.09	27.56	27.56	3.44	25.80	25.80	3.85
	57 (13.9)	33.32	33.32	2.27	32.02	32.02	2.51	30.63	30.63	2.79	29.14	29.14	3.09	27.52	27.52	3.44	25.76	25.76	3.85
1200	72 (22.2)	41.98	21.85	2.35	39.91	21.11	2.60	37.72	20.34	2.88	35.42	19.54	3.18	32.97	18.70	3.53	30.36	17.81	3.93
	67 (19.4)	38.06	27.42	2.33	36.17	26.68	2.58	34.20	25.92	2.85	32.11	25.12	3.16	29.90	24.28	3.51	27.54	23.38	3.90
	63 (17.2)	35.26	26.28	2.32	33.52	25.55	2.56	31.68	24.78	2.83	29.74	23.98	3.14	27.69	23.14	3.49	25.49	22.23	3.89
	62 (16.7)	34.91	32.97	2.32	33.32	33.32	2.56	31.87	31.87	2.84	30.26	30.26	3.14	28.54	28.54	3.50	26.65	26.65	3.90
	57 (13.9)	34.72	34.72	2.32	33.32	33.32	2.56	31.82	31.82	2.84	30.22	30.22	3.14	28.50	28.50	3.50	26.62	26.62	3.90
1315	72 (22.2)	42.44	22.61	2.39	40.30	21.87	2.64	38.06	21.09	2.91	35.70	20.28	3.22	33.20	19.42	3.57	30.54	18.53	3.96
	67 (19.4)	38.48	28.68	2.37	36.56	27.94	2.62	34.53	27.16	2.89	32.40	26.35	3.19	30.15	25.49	3.54	27.76	24.57	3.94
	63 (17.2)	35.68	27.45	2.36	33.88	26.71	2.60	32.01	25.93	2.87	30.03	25.12	3.17	27.93	24.25	3.52	25.72	23.32	3.93
	62 (16.7)	35.66	35.66	2.36	34.19	34.19	2.60	32.63	32.63	2.87	30.96	30.96	3.18	29.15	29.15	3.53	27.19	27.19	3.94
	57 (13.9)	35.62	35.62	2.36	34.15	34.15	2.60	32.59	32.59	2.87	30.92	30.92	3.18	29.11	29.11	3.53	27.16	27.16	3.94

See notes on pg. 13

DETAILED COOLING CAPACITIES (CONT.)

Evaporator Air		CONDENSER ENTERING AIR TEMPERATURES °F (°C)																	
		75 (23.9)			85 (29.4)			95 (35)			105 (40.6)			115 (46.1)			125 (51.7)		
CFM	EWB °F (°C)	Capacity MBtuh†		Total System KW**	Capacity MBtuh†		Total System KW**	Capacity MBtuh†		Total System KW**	Capacity MBtuh†		Total System KW**	Capacity MBtuh†		Total System KW**	Capacity MBtuh†		Total System KW**
		Total	Sens‡		Total	Sens‡		Total	Sens‡		Total	Sens‡		Total	Sens‡		Total	Sens‡	
25HHA448A30 Outdoor Section With FB4CNP048L Indoor Section**																			
1400	72 (22.2)	55.58	28.52	3.24	52.71	27.44	3.60	49.67	26.31	3.99	46.46	25.13	4.42	43.04	23.90	4.91	39.43	22.61	5.45
	67 (19.4)	50.82	35.33	3.22	48.24	34.27	3.57	45.50	33.14	3.96	42.57	31.95	4.39	39.46	30.71	4.87	36.16	29.39	5.42
	63 (17.2)	47.29	34.06	3.21	44.94	33.00	3.55	42.44	31.89	3.93	39.73	30.71	4.36	36.85	29.47	4.85	33.78	28.14	5.40
	62 (16.7)	46.47	41.90	3.20	44.21	40.79	3.55	41.81	39.57	3.92	39.28	38.16	4.36	36.75	36.75	4.85	34.20	34.20	5.41
	57 (13.9)	44.97	44.97	3.20	43.16	43.16	3.54	41.20	41.20	3.92	39.05	39.05	4.35	36.71	36.71	4.85	34.16	34.16	5.40
1600	72 (22.2)	56.50	29.84	3.29	53.50	28.73	3.65	50.34	27.58	4.04	47.02	26.39	4.48	43.48	25.13	4.96	39.77	23.83	5.50
	67 (19.4)	51.70	37.50	3.27	49.01	36.42	3.62	46.14	35.26	4.01	43.11	34.04	4.44	39.90	32.75	4.93	36.51	31.38	5.47
	63 (17.2)	48.16	36.09	3.26	45.70	35.00	3.60	43.07	33.86	3.98	40.27	32.65	4.41	37.29	31.36	4.90	34.15	29.97	5.45
	62 (16.7)	47.45	44.71	3.26	45.13	43.45	3.60	42.70	42.70	3.98	40.37	40.37	4.42	37.87	37.87	4.91	35.16	35.16	5.46
	57 (13.9)	46.68	46.68	3.25	44.73	44.73	3.60	42.62	42.62	3.98	40.32	40.32	4.41	37.83	37.83	4.91	35.13	35.13	5.46
1800	72 (22.2)	57.23	31.12	3.34	54.12	29.99	3.71	50.87	28.83	4.10	47.43	27.61	4.53	43.81	26.34	5.01	40.00	25.01	5.55
	67 (19.4)	52.40	39.64	3.32	49.60	38.51	3.68	46.64	37.31	4.06	43.52	36.05	4.49	40.23	34.70	4.98	36.78	33.24	5.52
	63 (17.2)	48.85	38.06	3.31	46.28	36.94	3.65	43.57	35.76	4.04	40.68	34.50	4.47	37.63	33.15	4.95	34.43	31.67	5.50
	62 (16.7)	48.35	47.90	3.31	46.06	46.06	3.65	43.82	43.82	4.04	41.39	41.39	4.47	38.75	38.75	4.96	35.91	35.91	5.52
	57 (13.9)	48.09	48.09	3.31	46.02	46.02	3.65	43.78	43.78	4.04	41.35	41.35	4.47	38.72	38.72	4.96	35.88	35.88	5.52

Evaporator Air		CONDENSER ENTERING AIR TEMPERATURES °F (°C)																	
		75 (23.9)			85 (29.4)			95 (35)			105 (40.6)			115 (46.1)			125 (51.7)		
CFM	EWB °F (°C)	Capacity MBtuh†		Total System KW**	Capacity MBtuh†		Total System KW**	Capacity MBtuh†		Total System KW**	Capacity MBtuh†		Total System KW**	Capacity MBtuh†		Total System KW**	Capacity MBtuh†		Total System KW**
		Total	Sens‡		Total	Sens‡		Total	Sens‡		Total	Sens‡		Total	Sens‡		Total	Sens‡	
25HHA460A30 Outdoor Section With FX4DN(B,F)061L Indoor Section**																			
1750	72 (22.2)	71.53	37.82	3.89	68.08	36.52	4.29	64.42	35.16	4.76	60.48	33.71	5.29	56.24	32.16	5.90	51.76	30.56	6.59
	67 (19.4)	65.68	47.25	3.85	62.56	45.95	4.25	59.23	44.58	4.71	55.66	43.13	5.25	51.76	41.55	5.86	47.62	39.88	6.55
	63 (17.2)	61.40	45.63	3.82	58.54	44.34	4.22	55.47	42.98	4.68	52.16	41.52	5.21	48.55	39.94	5.82	44.67	38.26	6.52
	62 (16.7)	60.35	56.38	3.81	57.59	55.02	4.21	54.66	53.49	4.68	51.60	51.60	5.21	48.60	48.60	5.82	45.33	45.33	6.52
	57 (13.9)	58.88	58.88	3.80	56.63	56.63	4.21	54.21	54.21	4.67	51.52	51.52	5.21	48.54	48.54	5.82	45.28	45.28	6.52
2000	72 (22.2)	72.60	39.66	3.96	69.02	38.35	4.36	65.21	36.95	4.82	61.14	35.48	5.35	56.77	33.92	5.96	52.16	32.28	6.65
	67 (19.4)	66.73	50.32	3.91	63.47	48.98	4.32	60.02	47.58	4.78	56.30	46.08	5.31	52.30	44.46	5.92	48.05	42.73	6.61
	63 (17.2)	62.44	48.48	3.88	59.46	47.16	4.29	56.27	45.76	4.75	52.83	44.26	5.28	49.11	42.64	5.89	45.13	40.88	6.58
	62 (16.7)	61.58	60.29	3.88	58.75	58.75	4.28	56.09	56.09	4.75	53.22	53.22	5.28	50.04	50.04	5.90	46.58	46.58	6.59
	57 (13.9)	61.06	61.06	3.87	58.64	58.64	4.28	56.03	56.03	4.75	53.16	53.16	5.28	49.99	49.99	5.89	46.53	46.53	6.59
2250	72 (22.2)	73.40	41.42	4.02	69.69	40.08	4.42	65.78	38.67	4.88	61.60	37.18	5.41	57.12	35.59	6.02	52.43	33.95	6.71
	67 (19.4)	67.50	53.24	3.98	64.14	51.88	4.38	60.57	50.43	4.84	56.77	48.88	5.37	52.69	47.20	5.98	48.38	45.35	6.67
	63 (17.2)	63.23	51.19	3.95	60.13	49.83	4.35	56.84	48.39	4.81	53.33	46.85	5.34	49.52	45.15	5.95	45.49	43.27	6.64
	62 (16.7)	62.93	62.93	3.95	60.36	60.36	4.35	57.57	57.57	4.82	54.54	54.54	5.35	51.19	51.19	5.97	47.57	47.57	6.66
	57 (13.9)	62.86	62.86	3.94	60.29	60.29	4.35	57.51	57.51	4.82	54.48	54.48	5.35	51.14	51.14	5.96	47.53	47.53	6.66

† Total and sensible capacities are net capacities. Blower motor heat has been subtracted.

‡ Sensible capacities shown are based on 80°F (27°C) entering air at the indoor coil. For sensible capacities at other than 80°F (27°C), deduct 835 Btuh (245 kW) per 1000 CFM (480 L/S) of indoor coil air for each degree below 80°F (27°C), or add 835 Btuh (245 kW) per 1000 CFM (480 L/S) of indoor coil air per degree above 80°F (27°C).

** System kw is total of indoor and outdoor unit kilowatts.

EWB — Entering Wet Bulb

NOTES:

1. Detailed cooling capacities are based on indoor and outdoor unit at the same elevation per AHRI standard 210/240−2008. If additional tubing length and/or indoor unit is located above outdoor unit, a slight variation in capacity may occur.
2. When the required data falls between the published data, interpolation may be performed. Extrapolation is not an acceptable practice.

HEAT PUMP HEATING PERFORMANCE

INDOOR AIR		OUTDOOR COIL ENTERING AIR TEMPERATURES °F (°C)																							
		–3 (–19.4)			7 (–13.9)			17 (–8.3)			27 (–2.8)			37 (2.8)			47 (8.3)			57 (13.9)			67 (19.4)		
EDB °F (°C)	CFM	Capacity MBtuh		Total Sys. KW†	Capacity MBtuh		Total Sys. KW†	Capacity MBtuh		Total Sys. KW†	Capacity MBtuh		Total Sys. KW†	Capacity MBtuh		Total Sys. KW†	Capacity MBtuh		Total Sys. KW†	Capacity MBtuh		Total Sys. KW†	Capacity MBtuh		Total Sys. KW†
		Total	Integ*		Total	Integ*		Total	Integ*		Total	Integ*		Total	Integ*		Total	Integ*		Total	Integ*		Total	Integ*	
25HHA418A30 Outdoor Section With FFMANP019 Indoor Section**																									
65 (18.3)	525	5.18	4.77	1.03	7.27	6.68	1.08	9.73	8.87	1.13	11.98	10.64	1.18	14.44	13.14	1.23	17.27	17.27	1.29	20.50	20.50	1.38	24.08	24.08	1.47
	600	5.26	4.84	1.04	7.38	6.78	1.08	9.87	9.00	1.13	12.12	10.76	1.16	14.64	13.32	1.21	17.54	17.54	1.26	20.83	20.83	1.34	24.29	24.29	1.42
	675	5.34	4.91	1.05	7.47	6.86	1.08	9.97	9.09	1.12	12.24	10.87	1.16	14.81	13.47	1.19	17.75	17.75	1.25	21.03	21.03	1.31	24.26	24.26	1.38
70 (21.1)	525	4.94	4.54	1.08	7.03	6.46	1.13	9.27	8.45	1.18	11.76	10.45	1.24	14.17	12.90	1.29	16.94	16.94	1.35	20.10	20.10	1.44	23.70	23.70	1.55
	600	5.02	4.62	1.09	7.14	6.56	1.13	9.41	8.58	1.18	11.90	10.57	1.22	14.37	13.07	1.27	17.20	17.20	1.33	20.44	20.44	1.41	23.94	23.94	1.49
	675	5.10	4.69	1.09	7.23	6.65	1.14	9.56	8.72	1.18	12.03	10.68	1.21	14.53	13.22	1.25	17.41	17.41	1.31	20.69	20.69	1.38	23.99	23.99	1.45
75 (23.9)	525	4.66	4.29	1.13	6.76	6.21	1.19	8.98	8.19	1.24	11.55	10.25	1.30	13.90	12.65	1.35	16.61	16.61	1.42	19.71	19.71	1.51	23.29	23.29	1.63
	600	4.75	4.37	1.14	6.87	6.31	1.19	9.12	8.32	1.23	11.68	10.37	1.28	14.09	12.82	1.33	16.86	16.86	1.39	20.04	20.04	1.47	23.56	23.56	1.56
	675	4.83	4.45	1.14	6.96	6.40	1.19	9.24	8.43	1.23	11.80	10.48	1.27	14.25	12.97	1.32	17.07	17.07	1.37	20.30	20.30	1.45	23.68	23.68	1.52

INDOOR AIR		OUTDOOR COIL ENTERING AIR TEMPERATURES °F (°C)																							
		–3 (–19.4)			7 (–13.9)			17 (–8.3)			27 (–2.8)			37 (2.8)			47 (8.3)			57 (13.9)			67 (19.4)		
EDB °F (°C)	CFM	Capacity MBtuh		Total Sys. KW†	Capacity MBtuh		Total Sys. KW†	Capacity MBtuh		Total Sys. KW†	Capacity MBtuh		Total Sys. KW†	Capacity MBtuh		Total Sys. KW†	Capacity MBtuh		Total Sys. KW†	Capacity MBtuh		Total Sys. KW†	Capacity MBtuh		Total Sys. KW†
		Total	Integ*		Total	Integ*		Total	Integ*		Total	Integ*		Total	Integ*		Total	Integ*		Total	Integ*		Total	Integ*	
25HHA424A30 Outdoor Section With FFMANP025 Indoor Section**																									
65 (18.3)	700	8.00	7.36	1.42	10.61	9.75	1.49	13.33	12.15	1.54	16.75	14.88	1.60	19.86	18.07	1.64	23.17	23.17	1.70	27.16	27.16	1.79	31.89	31.89	1.92
	800	8.15	7.50	1.43	10.79	9.91	1.50	13.54	12.35	1.54	16.99	15.09	1.59	20.12	18.31	1.62	23.49	23.49	1.67	27.57	27.57	1.75	32.41	32.41	1.87
	900	8.30	7.63	1.44	10.95	10.07	1.51	13.73	12.52	1.55	17.19	15.27	1.59	20.35	18.51	1.61	23.76	23.76	1.65	27.90	27.90	1.73	32.81	32.81	1.84
70 (21.1)	700	7.58	6.97	1.48	10.21	9.39	1.56	12.94	11.80	1.62	15.97	14.19	1.67	19.54	17.79	1.73	22.80	22.80	1.79	26.74	26.74	1.87	31.40	31.40	2.01
	800	7.74	7.12	1.50	10.40	9.56	1.57	13.17	12.00	1.62	16.29	14.47	1.66	19.79	18.01	1.71	23.12	23.12	1.76	27.14	27.14	1.83	31.91	31.91	1.96
	900	7.89	7.26	1.51	10.57	9.71	1.58	13.35	12.17	1.62	16.85	14.96	1.67	20.02	18.22	1.70	23.38	23.38	1.74	27.47	27.47	1.81	32.32	32.32	1.93
75 (23.9)	700	7.14	6.57	1.55	9.78	8.99	1.63	12.54	11.44	1.69	15.52	13.78	1.75	19.22	17.49	1.82	22.44	22.44	1.88	26.31	26.31	1.97	30.89	30.89	2.10
	800	7.30	6.72	1.57	9.98	9.17	1.64	12.76	11.64	1.69	15.79	14.02	1.74	19.46	17.71	1.80	22.74	22.74	1.85	26.70	26.70	1.92	31.40	31.40	2.05
	900	7.44	6.85	1.58	10.14	9.32	1.65	12.96	11.81	1.70	16.03	14.23	1.74	19.68	17.91	1.79	23.00	23.00	1.83	27.03	27.03	1.90	31.81	31.81	2.02

See notes on pg. 16

HEAT PUMP HEATING PERFORMANCE (CONT.)

INDOOR AIR		OUTDOOR COIL ENTERING AIR TEMPERATURES °F (°C)																							
		−3 (−19.4)			7 (−13.9)			17 (−8.3)			27 (−2.8)			37 (2.8)			47 (8.3)			57 (13.9)			67 (19.4)		
EDB °F (°C)	CFM	Capacity MBtuh		Total Sys. KW†	Capacity MBtuh		Total Sys. KW†	Capacity MBtuh		Total Sys. KW†	Capacity MBtuh		Total Sys. KW†	Capacity MBtuh		Total Sys. KW†	Capacity MBtuh		Total Sys. KW†	Capacity MBtuh		Total Sys. KW†	Capacity MBtuh		Total Sys. KW†
		Total	Integ*		Total	Integ*		Total	Integ*		Total	Integ*		Total	Integ*		Total	Integ*		Total	Integ*		Total	Integ*	
25HHA430A30 Outdoor Section With FFMANP031 Indoor Section**																									
65 (18.3)	875	8.71	8.01	1.63	12.19	11.20	1.70	15.84	14.45	1.77	19.79	17.58	1.84	24.22	22.04	1.93	28.29	28.29	1.99	32.79	32.79	2.07	37.67	37.67	2.16
	1000	8.86	8.15	1.64	12.38	11.38	1.70	16.09	14.67	1.77	20.11	17.86	1.84	24.53	22.32	1.92	28.59	28.59	1.97	33.13	33.13	2.03	38.00	38.00	2.11
	1125	9.02	8.30	1.66	12.59	11.57	1.71	16.33	14.89	1.77	20.85	18.52	1.85	24.79	22.56	1.91	28.83	28.83	1.95	33.38	33.38	2.01	38.22	38.22	2.08
70 (21.1)	875	8.18	7.53	1.70	11.67	10.73	1.77	15.33	13.97	1.84	19.23	17.08	1.92	23.82	21.67	2.02	27.89	27.89	2.09	32.31	32.31	2.16	37.15	37.15	2.25
	1000	8.35	7.68	1.72	11.89	10.93	1.78	15.59	14.21	1.85	19.56	17.37	1.92	24.13	21.95	2.00	28.20	28.20	2.06	32.66	32.66	2.12	37.51	37.51	2.20
	1125	8.50	7.82	1.73	12.08	11.10	1.79	15.81	14.42	1.85	19.81	17.59	1.92	24.36	22.17	1.99	28.43	28.43	2.04	32.93	32.93	2.10	37.74	37.74	2.17
75 (23.9)	875	7.61	7.00	1.78	11.12	10.22	1.85	14.77	13.47	1.92	18.64	16.56	2.00	23.39	21.29	2.11	27.47	27.47	2.18	31.84	31.84	2.26	36.63	36.63	2.35
	1000	7.78	7.16	1.79	11.33	10.41	1.86	15.04	13.71	1.93	18.99	16.87	2.00	23.71	21.57	2.09	27.78	27.78	2.15	32.19	32.19	2.22	36.99	36.99	2.30
	1125	7.94	7.30	1.81	11.50	10.57	1.87	15.27	13.92	1.93	19.25	17.10	2.00	23.97	21.81	2.08	28.04	28.04	2.13	32.46	32.46	2.19	37.24	37.24	2.27

INDOOR AIR		OUTDOOR COIL ENTERING AIR TEMPERATURES °F (°C)																							
		−3 (−19.4)			7 (−13.9)			17 (−8.3)			27 (−2.8)			37 (2.8)			47 (8.3)			57 (13.9)			67 (19.4)		
EDB °F (°C)	CFM	Capacity MBtuh		Total Sys. KW†	Capacity MBtuh		Total Sys. KW†	Capacity MBtuh		Total Sys. KW†	Capacity MBtuh		Total Sys. KW†	Capacity MBtuh		Total Sys. KW†	Capacity MBtuh		Total Sys. KW†	Capacity MBtuh		Total Sys. KW†	Capacity MBtuh		Total Sys. KW†
		Total	Integ*		Total	Integ*		Total	Integ*		Total	Integ*		Total	Integ*		Total	Integ*		Total	Integ*		Total	Integ*	
25HHA436A30 Outdoor Section With FFMANP037 Indoor Section**																									
65 (18.3)	1050	11.50	10.58	2.02	15.24	14.01	2.10	19.32	17.61	2.17	23.78	21.12	2.25	29.39	26.75	2.36	34.26	34.26	2.46	39.84	39.84	2.58	46.24	46.24	2.73
	1200	11.74	10.80	2.04	15.54	14.28	2.11	19.67	17.93	2.18	24.19	21.49	2.25	29.82	27.13	2.35	34.76	34.76	2.43	40.49	40.49	2.54	47.07	47.07	2.68
	1350	12.00	11.04	2.07	15.83	14.55	2.14	20.00	18.23	2.20	24.58	21.83	2.26	30.16	27.45	2.35	35.20	35.20	2.42	41.03	41.03	2.52	47.76	47.76	2.65
70 (21.1)	1050	10.81	9.95	2.10	14.57	13.39	2.18	18.65	17.00	2.26	23.09	20.50	2.35	28.33	25.78	2.45	33.69	33.69	2.57	39.14	39.14	2.69	45.43	45.43	2.85
	1200	11.10	10.21	2.13	14.90	13.69	2.20	19.03	17.35	2.28	23.53	20.89	2.35	29.28	26.64	2.45	34.20	34.20	2.54	39.79	39.79	2.65	46.23	46.23	2.80
	1350	11.34	10.44	2.16	15.18	13.95	2.23	19.34	17.64	2.29	23.89	21.22	2.36	29.65	26.99	2.45	34.62	34.62	2.53	40.32	40.32	2.63	46.91	46.91	2.77
75 (23.9)	1050	10.08	9.28	2.19	13.85	12.73	2.27	17.94	16.36	2.36	22.37	19.87	2.45	27.34	24.87	2.55	33.12	33.12	2.68	38.45	38.45	2.81	44.63	44.63	2.97
	1200	10.36	9.53	2.21	14.18	13.03	2.29	18.33	16.71	2.37	22.82	20.26	2.45	27.93	25.41	2.54	33.62	33.62	2.66	39.07	39.07	2.77	45.41	45.41	2.92
	1350	10.61	9.76	2.25	14.46	13.29	2.32	18.65	17.01	2.39	23.19	20.59	2.46	28.50	25.93	2.55	34.03	34.03	2.65	39.60	39.60	2.75	46.06	46.06	2.89

See notes on pg. 16

HEAT PUMP HEATING PERFORMANCE (CONT.)

INDOOR AIR		OUTDOOR COIL ENTERING AIR TEMPERATURES °F (°C)																							
		−3 (−19.4)			7 (−13.9)			17 (−8.3)			27 (−2.8)			37 (2.8)			47 (8.3)			57 (13.9)			67 (19.4)		
EDB °F (°C)	CFM	Capacity MBtuh		Total Sys. KW†	Capacity MBtuh		Total Sys. KW†	Capacity MBtuh		Total Sys. KW†	Capacity MBtuh		Total Sys. KW†	Capacity MBtuh		Total Sys. KW†	Capacity MBtuh		Total Sys. KW†	Capacity MBtuh		Total Sys. KW†	Capacity MBtuh		Total Sys. KW†
		Total	Integ*		Total	Integ*		Total	Integ*		Total	Integ*		Total	Integ*		Total	Integ*		Total	Integ*		Total	Integ*	
25HHA448A30 Outdoor Section With FB4CNP048L Indoor Section**																									
65 (18.3)	1400	16.21	14.91	2.77	21.31	19.58	2.89	26.72	24.37	3.01	32.57	28.93	3.14	39.84	36.26	3.33	46.71	46.71	3.52	54.10	54.10	3.71	62.59	62.59	3.93
	1600	16.54	15.21	2.79	21.68	19.93	2.90	27.15	24.76	3.01	33.12	29.41	3.13	40.86	37.18	3.32	47.30	47.30	3.47	54.89	54.89	3.64	63.64	63.64	3.84
	1800	16.82	15.47	2.82	22.01	20.22	2.92	27.53	25.10	3.02	33.58	29.82	3.13	41.31	37.59	3.30	47.82	47.82	3.44	55.54	55.54	3.59	64.50	64.50	3.78
70 (21.1)	1400	15.43	14.20	2.87	20.52	18.85	3.00	25.92	23.63	3.13	31.70	28.15	3.27	38.39	34.93	3.45	46.00	46.00	3.68	53.26	53.26	3.87	61.59	61.59	4.11
	1600	15.76	14.50	2.90	20.89	19.20	3.01	26.37	24.04	3.13	32.24	28.64	3.26	39.29	35.75	3.42	46.58	46.58	3.63	54.04	54.04	3.80	62.61	62.61	4.01
	1800	16.04	14.76	2.93	21.23	19.51	3.03	26.75	24.39	3.14	32.71	29.05	3.26	40.44	36.80	3.44	47.10	47.10	3.60	54.68	54.68	3.75	63.45	63.45	3.95
75 (23.9)	1400	14.58	13.42	2.98	19.66	18.06	3.11	25.08	22.86	3.26	30.81	27.37	3.41	37.32	33.96	3.59	45.27	45.27	3.85	52.45	52.45	4.04	60.60	60.60	4.28
	1600	14.90	13.71	3.01	20.04	18.42	3.13	25.52	23.27	3.26	31.34	27.83	3.40	38.01	34.59	3.56	45.86	45.86	3.79	53.19	53.19	3.96	61.59	61.59	4.18
	1800	15.19	13.98	3.04	20.38	18.73	3.15	25.91	23.63	3.27	31.80	28.25	3.40	38.63	35.15	3.55	46.37	46.37	3.76	53.82	53.82	3.91	62.41	62.41	4.12

INDOOR AIR		OUTDOOR COIL ENTERING AIR TEMPERATURES °F (°C)																							
		−3 (−19.4)			7 (−13.9)			17 (−8.3)			27 (−2.8)			37 (2.8)			47 (8.3)			57 (13.9)			67 (19.4)		
EDB °F (°C)	CFM	Capacity MBtuh		Total Sys. KW†	Capacity MBtuh		Total Sys. KW†	Capacity MBtuh		Total Sys. KW†	Capacity MBtuh		Total Sys. KW†	Capacity MBtuh		Total Sys. KW†	Capacity MBtuh		Total Sys. KW†	Capacity MBtuh		Total Sys. KW†	Capacity MBtuh		Total Sys. KW†
		Total	Integ*		Total	Integ*		Total	Integ*		Total	Integ*		Total	Integ*		Total	Integ*		Total	Integ*		Total	Integ*	
25HHA460A30 Outdoor Section With FX4DN(B,F)061L Indoor Section**																									
65 (18.3)	1750	22.65	20.84	3.14	28.50	26.19	3.26	34.87	31.79	3.38	43.02	38.21	3.56	50.31	45.79	3.71	58.30	58.30	3.87	67.89	67.89	4.03	77.66	77.66	4.20
	2000	23.00	21.16	3.16	28.89	26.54	3.27	35.32	32.20	3.38	43.42	38.56	3.54	50.81	46.24	3.67	58.96	58.96	3.82	68.49	68.49	3.95	77.97	77.97	4.10
	2250	23.32	21.46	3.19	29.23	26.86	3.28	35.73	32.57	3.39	43.80	38.91	3.53	51.25	46.64	3.65	59.50	59.50	3.80	68.88	68.88	3.91	78.00	78.00	4.04
70 (21.1)	1750	21.90	20.15	3.28	27.79	25.53	3.41	34.12	31.11	3.54	42.54	37.78	3.73	49.72	45.25	3.88	57.58	57.58	4.04	67.08	67.08	4.22	76.80	76.80	4.39
	2000	22.26	20.48	3.31	28.18	25.90	3.42	34.59	31.54	3.53	42.97	38.16	3.71	50.22	45.70	3.84	58.23	58.23	4.00	67.73	67.73	4.13	77.14	77.14	4.29
	2250	22.58	20.77	3.34	28.54	26.23	3.44	34.98	31.90	3.55	43.31	38.47	3.70	50.65	46.10	3.83	58.78	58.78	3.97	68.13	68.13	4.09	77.22	77.22	4.23
75 (23.9)	1750	21.09	19.41	3.43	27.02	24.83	3.56	33.36	30.41	3.70	41.01	36.42	3.87	49.13	44.71	4.07	56.88	56.88	4.23	66.27	66.27	4.41	75.91	75.91	4.60
	2000	21.45	19.74	3.45	27.43	25.21	3.57	33.81	30.82	3.69	42.41	37.66	3.88	49.60	45.14	4.02	57.51	57.51	4.18	66.93	66.93	4.32	76.30	76.30	4.49
	2250	21.77	20.03	3.48	27.79	25.54	3.59	34.21	31.19	3.71	42.80	38.01	3.88	50.04	45.53	4.01	58.06	58.06	4.15	67.38	67.38	4.27	76.42	76.42	4.42

* The Btuh heating capacity values shown are net integrated values from which the defrost effect has been subtracted. The Btuh heating from supplement heaters should be added to those values to obtain total system capacity.

† The kW values include the compressor, outdoor fan motor, and indoor blower motor. The kW from supplement heaters should be added to these values to obtain total system kilowatts.

NOTE: When the required data falls between the published data, interpolation may be performed. Extrapolation is not an acceptable practice.

EDB — Entering Dry Bulb

GUIDE SPECIFICATIONS
GENERAL

System Description

Outdoor-mounted, air-cooled, split-system heat pump unit suitable for ground or rooftop installation. Unit consists of a scroll-type hermetic compressor, an air-cooled coil, propeller-type condenser fan, and a control box. Unit will discharge supply air horizontally as shown on contract drawings. Unit will be used in a refrigeration circuit to match up to a packaged fan coil or furnace.

Quality Assurance

— Unit will be rated in accordance with the latest edition of AHRI Standard 210.

— Unit will be certified for capacity and efficiency, and listed in the latest AHRI directory.

— Unit construction will comply with latest edition of ANSI/ ASHRAE and with NEC.

— Unit will be constructed in accordance with UL standards and will carry the UL label of approval. Unit will have c-UL approval.

— Unit cabinet will be capable of withstanding Federal Test
Method Standard No. 141 (Method 6061) 500-hr salt spray test.

— Air-cooled condenser coils will be leak tested and pressure tested

— Unit constructed in ISO9001 approved facility.

Delivery, Storage, and Handling

— Unit will be shipped as single package only and is stored and handled per unit manufacturer's recommendations.

Warranty (for inclusion by specifying engineer)

— U.S. and Canada only.

PRODUCTS

Equipment

— Factory assembled, single piece, air-cooled heat pump unit. Contained within the unit enclosure is all factory wiring, piping, controls, compressor, refrigerant charge Puron® (R-410A), and special features required prior to field start-up.

Unit Cabinet

— Unit cabinet will be constructed of galvanized steel and bonderized.

Fans

— Condenser fan will be direct-drive propeller type, discharging air horizontally.

— Condenser fan motors will be totally enclosed, 1-phase type with class B insulation and permanently lubricated bearings. Shafts will be corrosion resistant.

— Fan blades will be statically and dynamically balanced.

— Condenser fan openings will be equipped with coated steel wire safety guards.

Compressor

— Compressor will be a scroll-type, hermetically sealed.

— Compressor will be mounted on rubber vibration isolators.

Condenser Coil

— Condenser coil will be air cooled.

— Coil will be constructed of aluminum fins mechanically bonded to copper tubes which are then cleaned, dehydrated, and sealed.

Refrigeration Components

— Refrigeration circuit components will include liquid-line front-seating shutoff valve with sweat connections, vapor-line front-seating shutoff valve with sweat connections, system charge of Puron® (R-410A) refrigerant, and compressor oil.

— Unit will be equipped with high-pressure switch, low pressure switch and filter drier for Puron refrigerant.

Operating Characteristics

— The capacity of the unit will meet or exceed _____ Btuh at a suction temperature of _____ °F/°C. The power consumption at full load will not exceed _____ kW.

— Combination of the unit and the evaporator or fan coil unit will have a total net cooling capacity of _____ Btuh or greater at conditions of _____ CFM entering air temperature at the evaporator at _____ °F/°C wet bulb and _____ °F/°C dry bulb, and air entering the unit at _____ °F/°C.

— The system will have a SEER of _____ Btuh/watt or greater at DOE conditions.

Electrical Requirements

— Nominal unit electrical characteristics will be _____ v, single phase, 60 hz. The unit will be capable of satisfactory operation within voltage limits of _____ v to _____ v.

— Nominal unit electrical characteristics will be _____ v, three phase, 60 hz. The unit will be capable of satisfactory operation within voltage limits of _____ v to _____ v.

— Unit electrical power will be single point connection.

— Control circuit will be 24v.

Special Features

— Refer to section of this literature identifying accessories and descriptions for specific features and available enhancements.

Copyright 2015 Carrier Corp. • 7310 W. Morris St. • Indianapolis, IN 46231

Edition Date: 01/15

Catalog No: 25HHA4−01PD

Manufacturer reserves the right to change, at any time, specifications and designs without notice and without obligations.

Replaces: New