# 40MVC018 with 38MVC018
# Comfort™ Series High Wall Duct–Free Split System Heat Pump with Puron® Refrigerant

Carrier®
Turn to the Experts.℠

# Submittal Data

Job Data:_____ Location:_____

Buyer:_____ Buyer P.O.#_____ Carrier # _____

Unit Number:_____ Model Number: _____

Performance Data Certified By: _____ Date: _____

eez
Worry-FREE. Hassle-FREE. Duct-FREE.™

Puron
the environmentally sound refrigerant

## FEATURES

- 13 SEER
- Wireless remote standard
- Low voltage controls
- User selectable fan speeds (auto, low med., high)
- Indoor unit is powered from the outdoor unit
- Auto restart
- Diagnostics
- Dehumidification mode
- Sleep mode
- Auto swing
- Timer
- Cleanable filters
- Limited Warranty: 1-year on all parts/5-years on compressor

**Indoor Unit - 40MVC / Outdoor Unit - 38MVC**
**(Unless otherwise indicated, data applies to both indoor and outdoor models)**

**SYSTEM SIZE** . . . . . 018
**REFRIGERANT** . . . . . R-410A
**PERFORMANCE**
Nominal Capacity . . . . . 18,000
SEER . . . . . 13
Airflow (Low/Med/High) . . . . . 500 / 570 / 630
Performance at actual conditions: Attached ☐ Not Attached ☐
**SOUND PRESSURE dBA**
Indoor (Low/Med/High) . . . . . 43 / 45 / 48
Outdoor . . . . . 57
**SOUND POWER dBA**
Indoor (Low/Med/High) . . . . . 54 / 56 / 59
Outdoor . . . . . 68

**ELECTRICAL**
System Voltage . . . . . 208/230V
MCA (outdoor) . . . . . 11
MOCP (outdoor) . . . . . 20
Fan Motor (Indoor) (FLA) . . . . . .26
Motor Watts . . . . . 31
**CONTROLS**
Control Remote . . . . . Wireless
Control Voltage . . . . . Low Voltage
Interconnecting (indoor to outdoor) Wiring (0-50 ft.) . . . . . 18 AWG
Interconnecting (indoor to outdoor) Wiring (50-65 ft.) . . . . . 16 AWG
**REFRIGERANT LINES (Insulate both lines)**
Mixed Phase Line (in.) OD . . . . . 1/4
Vapor Line (in.) OD . . . . . 1/2
Metering/Control Device . . . . . Capillary tube in outdoor unit

| | | |
|---|---|---|
| **Condensate Pump:** | Required ☐ | Not Required ☐ |
| **Low Ambient Controls:** | Required ☐ | Not Required ☐ |
| **Crankcase Heater:** | Required ☐ | Not Required ☐ |
| **Wind Baffle:** | Required ☐ | Not Required ☐ |

**Optional:**

| | | |
|---|---|---|
| **Compressor extended warranty 6-10 years:** | Required ☐ | Not Required ☐ |
| **All parts & labor 2-5 years:** | Required ☐ | Not Required ☐ |
| **All parts & labor 2-5 years + Compressor 6-10 years:** | Required ☐ | Not Required ☐ |

## UNIT DIMENSIONS – INDOOR MODEL

| Model Size | W in. (mm) | H in. (mm) | D in. (mm) | Operating Weight lb (kg) |
|---|---|---|---|---|
| 18K | 49.21 (1250) | 12.80 (325) | 9.06 (230) | 36.4 (17) |

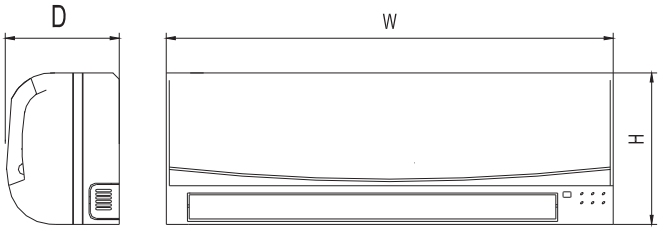


A07336

**Fig. 1 – 40MVC Dimensions**

## UNIT CLEARANCES – INDOOR MODEL

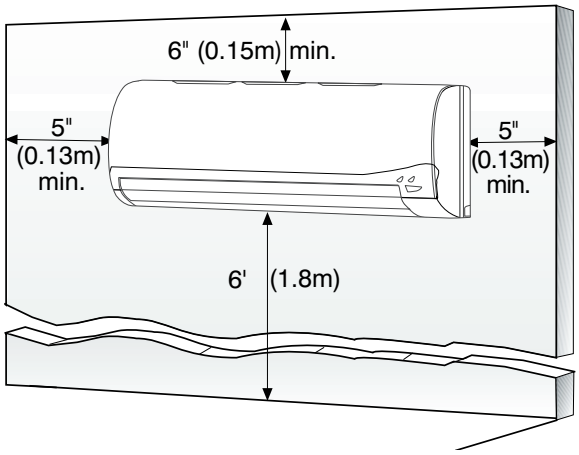


A07891

**Fig. 2 – 40MVC Clearance**

## UNIT DIMENSIONS – OUTDOOR MODEL

| Model Size | W in. (mm) | H in. (mm) | L1 in. (mm) | L2 in. (mm) | L3 in. (mm) | Weight lb (kg) |
|---|---|---|---|---|---|---|
| 18K | 33.07 (840) | 27.36 (695) | 22.05 (560) | 14.17 (360) | 13.19 (335) | 116.6 (52.89) |

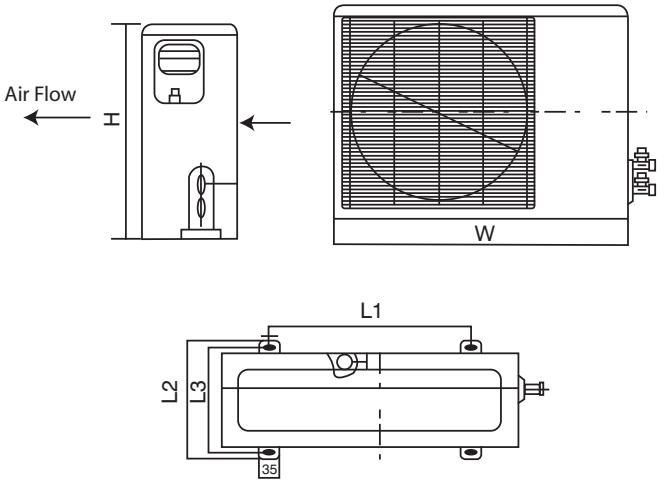


A07337

**Fig. 3 – 38MVC Dimensions**

## UNIT CLEARANCES – OUTDOOR MODEL

| UNIT | 18k in. (mm) |
|---|---|
| A | 24 (610) |
| B | 36 (914) |
| C | 24 (610) |
| D | 12 (305) |
| E | 12 (305) |

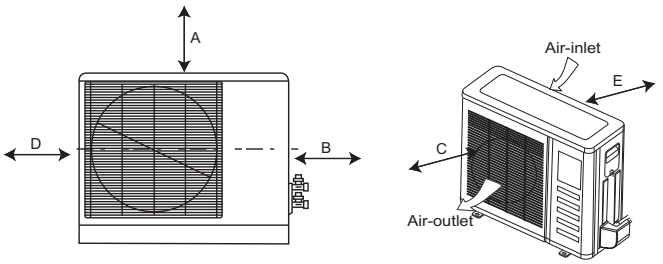


A07894

**Fig. 4 – 38MVC Clearances**

Copyright 2007 Carrier Corp. • 7310 W. Morris St. • Indianapolis, IN 46231
Printed in U.S.A. Edition Date: 11/07 **Catalog No: 38–40MVC018–1SB**

**Manufacturer reserves the right to change, at any time, specifications and designs without notice and without obligations.**
Replaces: NEW