40MVC018 with 38MVC018
Comfort™ Series High Wall Duct–Free Split System
Cooling Only with Puron® Refrigerant

Carrier®
Turn to the Experts.℠

Submittal Data

Job Data:_____ Location:_____

Buyer:_____ Buyer P.O.#_____ Carrier # _____

Unit Number:_____ Model Number: _____

Performance Data Certified By: _____ Date: _____

eez
Worry-FREE. Hassle-FREE. Duct-FREE.™

Puron
the environmentally sound refrigerant

FEATURES

- 13 SEER
- Wireless remote standard
- Low voltage controls
- User selectable fan speeds (auto, low med., high)
- Indoor unit is powered from the outdoor unit
- Auto restart
- Diagnostics
- Dehumidification mode
- Sleep mode
- Auto swing
- Timer
- Cleanable filters
- Limited Warranty: 1-year on all parts/5-years on compressor

Indoor Unit - 40MVC / Outdoor Unit - 38MVC
(Unless otherwise indicated, data applies to both indoor and outdoor models)

SYSTEM SIZE 018
REFRIGERANT R-410A
PERFORMANCE
Nominal Capacity 18,000
SEER 13
Airflow (Low/Med/High) . . . . . 500 / 570 / 630
Performance at actual conditions: Attached ☐ Not Attached ☐
SOUND PRESSURE dBA
Indoor (Low/Med/High) . . . . . 43 / 45 / 48
Outdoor 57
SOUND POWER dBA
Indoor (Low/Med/High) . . . . . 54 / 56 / 59
Outdoor 68

ELECTRICAL
System Voltage 208/230V
MCA (outdoor) 11
MOCP (outdoor) 20
Fan Motor (Indoor) (FLA) 26
Motor Watts 31
CONTROLS
Control Remote . . . . . Wireless
Control Voltage . . . . . Low Voltage
Interconnecting (indoor to outdoor) Wiring (0-50 ft.) . . . . . 18 AWG
Interconnecting (indoor to outdoor) Wiring (50-65 ft.) . . . . . 16 AWG
REFRIGERANT LINES (Insulate both lines)
Mixed Phase Line (in.) OD 1/4
Vapor Line (in.) OD 1/2
Metering/Control Device . . . . . Capillary tube in outdoor unit

Condensate Pump:	Required ☐	Not Required ☐
Low Ambient Controls:	Required ☐	Not Required ☐
Crankcase Heater:	Required ☐	Not Required ☐
Wind Baffle:	Required ☐	Not Required ☐

Optional:

Compressor extended warranty 6-10 years:	Required ☐	Not Required ☐
All parts & labor 2-5 years:	Required ☐	Not Required ☐
All parts & labor 2-5 years + Compressor 6-10 years:	Required ☐	Not Required ☐

UNIT DIMENSIONS – INDOOR MODEL

Model Size	W in. (mm)	H in. (mm)	D in. (mm)	Operating Weight lb (kg)
18K	49.21 (1250)	12.80 (325)	9.06 (230)	36.4 (17)

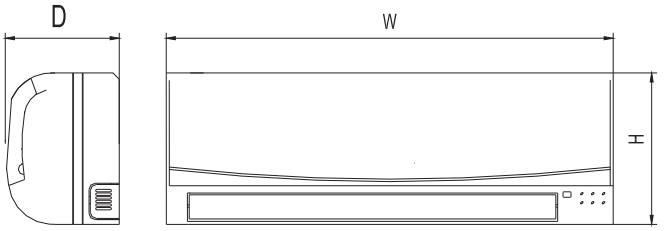

A07336

Fig. 1 – 40MVC Dimensions

UNIT CLEARANCES – INDOOR MODEL

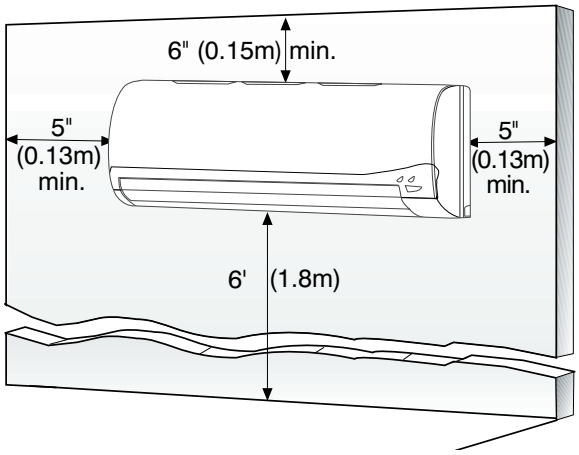

A07891

Fig. 2 – 40MVC Clearance

UNIT DIMENSIONS – OUTDOOR MODEL

Model Size	W in. (mm)	H in. (mm)	L1 in. (mm)	L2 in. (mm)	L3 in. (mm)	Weight lb (kg)
18K	33.07 (840)	27.36 (695)	22.05 (560)	14.17 (360)	13.19 (335)	116.6 (52.89)

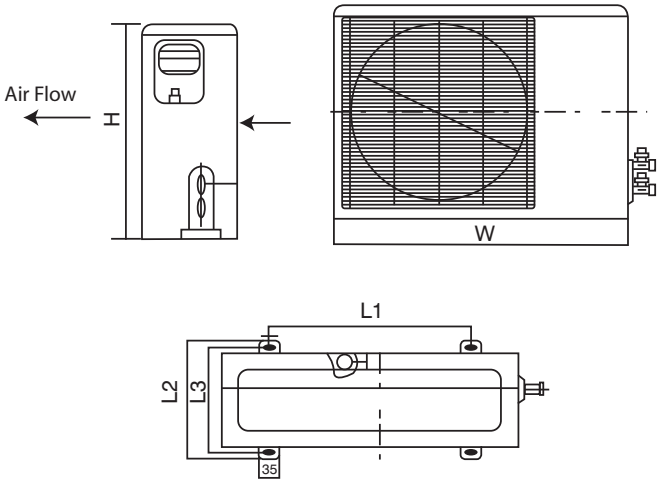

A07337

Fig. 3 – 38MVC Dimensions

UNIT CLEARANCES – OUTDOOR MODEL

UNIT	18k in. (mm)
A	24 (610)
B	36 (914)
C	24 (610)
D	12 (305)
E	12 (305)

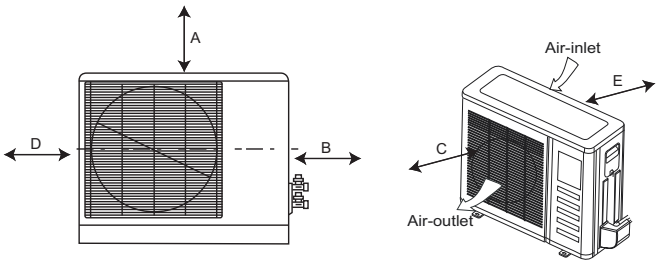

A07894

Fig. 4 – 38MVC Clearances

Copyright 2008 Carrier Corp. • 7310 W. Morris St. • Indianapolis, IN 46231
Printed in U.S.A. Edition Date: 04/08 **Catalog No: 38–40MVC018–2SB**

Manufacturer reserves the right to change, at any time, specifications and designs without notice and without obligations.
Replaces: NEW