38AUQ07 – 12
Heat Pump Outdoor Unit
Split System with Puron® Refrigerant
60 Hz

Carrier
turn to the experts

Product Data

Gemini

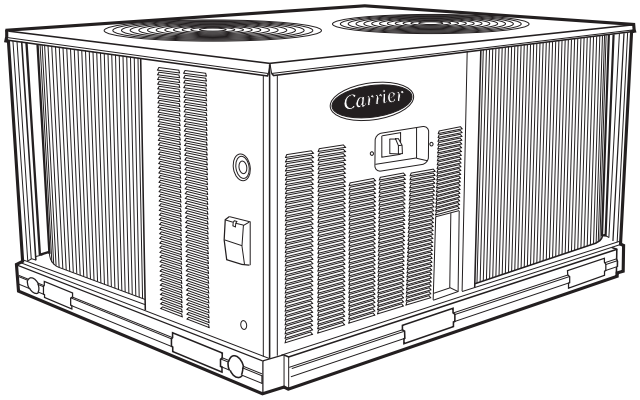

C10108

Fig. 1 - 38AUQ07-12

ENERGY STAR PARTNER

ASHRAE 90.1 COMPLIANT

Puron
the environmentally sound refrigerant

Gemini split system heat pump systems save energy and provide outstanding heating and cooling all year with:

- All-season comfort in any climate
- High energy savings capability
- Suitability for new construction or replacement

FEATURES/BENEFITS

System indoor and outdoor sections offer outstanding performance in either the cooling or heating mode

Heat pump system energy savings opportunity

Electrical energy consumption is always a prime concern when selecting an air-conditioning system for a commercial application. An easy, effective way to save energy is to install a heat pump. When building plans call for a heat pump, consider a matched Carrier 38AUQ/40RUQ heat pump system. These systems not only offer highly efficient cooling, they also provide a clean, safe, efficient source of heat. In fact, they are capable of delivering more than 3 units of heat energy for each unit of electrical power consumed.

Heat pump uniqueness

The outstanding performance of these heat pump systems is due to the heat pump's ability to absorb and transfer heat — from outdoors to indoors for heating, and from indoors to outdoors for cooling. System indoor and outdoor sections operate as evaporators or condensers, depending on whether heating or cooling is required. The heating cycle starts with the outdoor coil absorbing heat from the surrounding air (even outside air at extremely cold temperatures), and ends with the indoor coil releasing or rejecting heat to the air around it.

38AUQ application versatility

Whether for a new application or replacement, these Carrier split system heat pumps offer time-proven performance for year-round comfort in any climate. With matching 40RUQ air handler, the units standard cooling operation ranges up to 125°F (52°C) and down to 35°F (2°C) ambient temperatures. If lower ambient cooling temperatures are required, Carrier's Motor Master controller will allow operation down to -20°F (-29°C) ambient temperatures.

FEATURES/BENEFITS (cont.)

Rugged long life compressor

The 38AUQ outdoor units are equipped with a scroll compressor for superior efficiency and long life. Crank case heaters are available where required and each circuit is further protected by a suction line accumulator to protect during the defrost cycles or unique applications.

Controls for performance efficiency

These units offer the building owner operating controls and components designed for performance dependability. The highly efficient hermetic scroll compressors are engineered for long life and durability. The compressor includes overload protection and compressor vibration isolation for further enhancement of quiet operation. The high-pressure switch protects the entire refrigeration system from abnormally high operating pressures. A loss-of-charge switch is also provided to protect the system against low charge conditions.

Each unit utilizes the the Comfort Alert™ diagnostic and troubleshooting control system. This protects the units operation and provides valuable diagnostic information such as:
- System Go LED indicator
- Fault LED indicator
- Compressor fault LED indicator
- Phase loss protection
- Phase reversal protection
- Anti short cycle protection

The 24-v-75VA control circuit transformer permits quick, easy wiring of standard and programmable 24-v thermostats. The 24-v-75VA control circuit transformer also comes with a re-settable circuit breaker for extra protection.

Latest safety standards are assured through UL (Underwriters' Laboratories) and UL, Canada approval.

The 38AUQ units utilize a reliable defrost board with field configurable timed defrost cycles. The defrost board may be easily configured for defrost cycles of 30 to 90 minutes, depending upon the application.

Motor failure due to electrical overload is prevented by temperature and current sensors. Coil quality and performance are enhanced by copper tubes and aluminum fins, which provide maximum heat transfer. The coil is circuited for subcooling. A large heat transfer surface offers additional efficiency.

Innovative Carrier 40RUQ indoor units are custom matched to 38AUQ outdoor units for superior system performance

The 40RUQ Heat Pump air handler has excellent fan performance, efficient direct-expansion (DX) coils, easy installation, and a unique combination of indoor air quality features. Its versatility and state-of-the-art features help to ensure that the heat pump system provides economical performance now and in the future.

Easy installation and service — The 40RUQ multi-position design and component layout helps to get the unit installed and running quickly. The direct-expansion (DX) coils have factory-installed thermostatic expansion valves (TXVs) with matching distributor nozzles. All 40RUQ units also include factory-installed check valves and piping for heat pump duty with matching 38AUQ units.

The 40RUQ units can be converted from horizontal to vertical operation simply by repositioning the unit. Drain pan connections are duplicated on both sides of the unit. Fan motors and contactors are pre-wired. For easier service, the filters, motor, drive, TXVs, check valves, and coil connections are accessible by removing a single side panel.

Indoor-air quality (IAQ) features — The unique combination of IAQ features in the 40RUQ Series indoor units helps to make sure that only clean, fresh, conditioned air is delivered to the occupied space.

In the Cooling mode, direct-expansion (DX) cooling coils prevent the build-up of humidity in the room, even during part-load conditions.

Standard 2-in. disposable filters remove dust and airborne particles from the occupied space.

Thermal insulation contains an immobilized anti-microbial agent to inhibit the growth of bacteria and fungi. The anti-microbial agent is registered with the U.S. Environmental Protection Agency (EPA).

The pitched corrosion-free drain pan can be adjusted for a right- or left-hand connection to provide positive drainage and to prevent standing condensate.

The 40RUQ accessory economizer can provide ventilation air to improve indoor air quality. When used in conjunction with Carrier Comfort System thermostats and CO_2 sensors or PremierLink™ controller, the economizer admits fresh outdoor air to replace stale, recirculated indoor air.

Economy — The 40RUQ Series air handlers have low initial costs, and they continue to save money by providing reduced installation expense and energy-efficient performance.

Quick installation reduces installation costs, and TXVs, check valves, and heat pump piping are factory-installed.

High-efficiency, precision-balanced fans minimize air turbulence, surging, and unbalanced operation, cutting operating expenses.

The economizer accessory precisely controls the blend of outdoor air and room air to achieve comfort levels.

When the outside air enthalpy is suitable, outside air dampers can fully open to provide "free" cooling.

FEATURES/BENEFITS (cont.)

Rugged dependability — The 40RUQ units are made to last. The die-formed galvanized steel panels ensure structural integrity under all operating conditions. Galvanized steel fan housings are securely mounted to a die-formed galvanized steel deck. Coil housings are galvanized steel, and coils have aluminum fins mechanically bonded to copper tubes. The condensate drain pans provide corrosion-free performance.

Coil flexibility — Model 40RUQ coils have galvanized steel casings; inlet and outlet connections are on the same end. The coils are designed for use with Puron (R-410A) refrigerant and have 3/8-in. diameter copper tubes mechanically bonded to aluminum sine-wave fins. The coils include matched, factory-installed TXVs with matching distributor nozzles. Check valves and heat pump piping are also included in all 40RUQ units.

Duplicate piping access holes on both sides of the unit eliminate drilling; condensate connections for both vertical and horizontal installations are also provided on both sides of the unit.

TABLE OF CONTENTS

	PAGE
Features/Benefits	1
Model Number Nomenclature	3
AHRI Capacity Ratings	5
Physical Data	6
Options and Accessories	7
Base Unit Dimensions	9
Performance Data	10
Electrical Data	16
Typical Piping and Wiring	19
Typical Wiring Schematic	20
Application Data	21
Guide Specifications	22

MODEL NUMBER NOMENCLATURE

1	2	3	4	5	6	7	8	9	10	11	12	13	14	15	16	17	18
3	8	A	U	Q	A	0	8	A	0	A	6	–	0	A	0	A	0

Model
38AU = Commercial Split System
Puron® R–410A Refrigerant

Type
Q = Heat Pump

Refrigerant Options
A = None
B = Low Ambient

Nominal Tonnage
07 = 6 Tons
08 = 7.5 Tons
12 = 10 Tons

Factory Assigned
A = Default

Factory Assigned
0 = Default

Coil Options (Tube – Fin – Hail Guard)
A = Al/Cu Standard
B = Pre Coat Al/Cu
C = E–Coat Al/Cu
M = Al/Cu Standard with louvered hail guard
N = Pre Coat Al/Cu with louvered hail guard
P = E–Coat Al/Cu with louvered hail guard

Voltage
1 = 575/3/60
5 = 208/230/3/60
6 = 460/3/60

Design Rev
– = Factory Assigned

Base Unit Controls
0 = Standard Electrical Mechanical Controls

Factory Assigned
A = Default

Service Options
0 = None
1 = Un–powered Convenience Outlet
2 = Powered Convenience Outlet

Electrical Options
A = None
C = Non–Fused Disconnect

Brand / Packaging
0 = Standard
1 = LTL

AHRI CAPACITY RATINGS

Cool

UNIT	COOLING STAGES	NOM. CAPACITY (TONS)	EER	IEER	NET COOLING CAPACITY (MBH)	TOTAL POWER (kW)
38AUQ07 / 40RUQ07	1	6	11.0	11.8	70.0	6.4
38AUQ08 / 40RUQ08	1	7.5	11.0	11.8	89.0	8.1
38AUQ12 / 40RUQ12	1	10	11.0	11.8	112.0	10.2

High Heat at 47°F (8°C)

UNIT	COOLING STAGES	NOM. CAPACITY (TONS)	NET HEATING CAPACITY (MBH)	TOTAL POWER (kW)	COP
38AUQ07 / 40RUQ07	1	6	66.0	5.9	3.30
38AUQ08 / 40RUQ08	1	7.5	87.0	7.7	3.30
38AUQ12 / 40RUQ12	1	10	106.0	9.4	3.30

Low Heat at 17°F (−8°C)

UNIT	COOLING STAGES	NOM. CAPACITY (TONS)	NET HEATING CAPACITY (MBH)	TOTAL POWER (kW)	COP
38AUQ07 / 40RUQ07	1	6	39.0	5.2	2.20
38AUQ08 / 40RUQ08	1	7.5	52.0	6.9	2.20
38AUQ12 / 40RUQ12	1	10	70.0	9.3	2.20

LEGEND

AHRI – Air–Conditioning, Heating and Refrigeration Institute
ASHRAE – American Society of Heating, Refrigerating and Air Conditioning, Inc.
EER – Energy Efficiency Ratio
IEER – Integrated Energy Efficiency Ratio

NOTES

1. Rated in accordance with ARI Standard 340/360–07, as appropriate.
2. Ratings are based on:
   Cooling Standard: 27°C (80°F) db, 19°C (67°F) wb indoor air temp and 35°C (95°F) db outdoor air temp.
   IEER Standard: 27°C (80°F) db, 19°C (67°F) wb indoor air temp and 4 various outdoor temperatures.
3. All units comply with ASHRAE 90.1 Energy Standard for minimum EER and IEER requirements.

ARI Standard 340/360

SOUND POWER LEVELS, dB

UNIT	COOLING STAGES	OUTDOOR SOUND (DB)								
		A–Weighted	63	125	250	500	1000	2000	4000	8000
38AUQ07	1	82	86.4	86.0	79.2	80.2	77.6	72.0	67.9	62.3
38AUQ08	1	82	86.8	85.7	80.3	80.3	77.7	72.3	70.2	65.4
38AUQ12	1	82	82.8	81.5	79.2	79.4	76.2	72.3	69.4	64.2

LEGEND

dB = Decibel

NOTE: Outdoor sound data is measure in accordance with ARI standard 270–2008.

PHYSICAL DATA

	38AUQ07	38AUQ08	38AUQ12
Refrigeration System			
# Circuits / # Comp. / Type	1 / 1 / Scroll	1 / 1 / Scroll	1 / 1 / Scroll
Shipping charge A/B (lbs)	10.0 Puron	13.0 Puron	15.0 Puron
System charge w/ fan coil * A/B (lbs)	18	21	27
High – press. Trip / Reset (psig)	630 / 505	630 / 505	630 / 505
Low – press. Trip / Reset (psig)	27 / 44	27 / 44	27 / 44
Outdoor Coil			
Material – Tube / Fin	Al/Cu	Al/Cu	Al/Cu
Round Tube Plate Fin Coil type	RTPF	RTPF	RTPF
Rows / FPI	2 / 17	2 / 17	2 / 17
total face area (ft2)	17.5	23.0	28.1
Outdoor fan / motor			
Qty / Motor drive type	2 / direct	2 / direct	2 / direct
Motor HP / RPM	1/4 / 1100	1/4 / 1100	1/4 / 1100
Fan diameter (in)	22	22	22
Watts (total)	610	610	610
Piping Connections			
Qty / Vapor (in. ODS)	1 / 1 1/8	1 / 1 1/8	2 / 1 3/8
Qty / Liquid (in. ODS)	1 / 3/8	1 / 1/2	1 / 1/2

* Approximate system charge with 25 ft. piping of sizes indicated with matched 40RUQ

OPTIONS AND ACCESSORIES

38AUQ

ITEM	OPTION*	ACCESSORY†
Disconnect Switch (non-fused)	X	
Enviro-Shield™ Coil Protection	X	
Convenience Outlet (115-v) Powered	X	
Convenience Outlet Non–powered	X	
Low Ambient Temperature Motormaster® Control**	X	X
Outdoor Coil Grille		X
Outdoor Coil Louvered Hail Guard	X	X
PremierLink™ Controls		X
Programmable Thermostats		X

* Factory–installed option
† Field–installed accessory
** Available as an option or accessory

Enviro-Shield outdoor coil options are available to match coil protection to site conditions for optimum durability. See the table below and refer to the Application data for selection guidance. Consult a Carrier representative for further information.

Low ambient temperature Motormaster® head pressure control operates in Cooling mode at outdoor temperatures below 55 F. The Motormaster control varies the speed of outdoor-fan motors to maintain correct condensing temperature down to –20 F.

115-v convenience outlet is available to provide power to electric drills, lights, and refrigerant recovery machines. This means that a separate 115-v power supply is no longer required.

Non-powered convenience outlet requires the filed installation of a general purpose 125-volt 15-A circuit powered from a source elsewhere in the building.

Non-fused disconnect switch removes power locally at the condensing unit. This switch also includes a power lockout capability to protect the service person. This lockout switch saves time and effort as the service person no longer needs to access a distant disconnect switch while servicing the unit.

Outdoor coil louvered hail guard protects outdoor units from hail and other flying debris.

Outdoor coil grille protects outdoor coil from large objects and vandalism.

PremierLink controller is a field retrofit split system control compatible with Carrier Comfort Network® (CCN) controls and other building automation systems (BAS). This control is designed to allow users the access and ability to change factory-defined settings thus expanding the function of the standard unit.

Carrier commercial thermostats provide 7-day programmable capability for commercial application.

Outdoor Coil Protection Applications

Enviro-Shield DESCRIPTION	ENVIRONMENT					
	Standard Non–Corrosive	Mild Coastal	Moderate Coastal	Severe Coastal	Industrial	Combined Coastal and Industrial
Alum Fin / Cu Tube	X					
Pre-Coated Al/Cu		X				
E-Coated Al/Cu		X	X	X	X	X

OPTIONS AND ACCESSORIES (cont.)

40RUQ

ITEM	OPTION*	ACCESSORY†
Alternate Fan Motors	X	
Alternate Drives	X	
Prepainted Units	X	
CO_2 Sensors		X
Condensate Drain Trap		X
Discharge Plenum		X
Economizer		X
Electric Heat		X
Hot Water Heating Coils		X
Overhead Suspension Package		X
Programmable Thermostats		X
Return Air Grille		X
Steam Heating Coil		X
Subbase		X
UV–C Germicidal Lamp**		X

* Factory–installed option.
† Field–installed accessory
** Contact Application Engineer

Factory-installed options

Alternate fan motors and drives are available to provide the widest possible range of performance.

Prepainted steel units are available from the factory for applications that require painted units. Units are painted with American Sterling Gray color.

Field-installed accessories

CO_2 sensors can be used in conjunction with the economizer accessory to help meet indoor air quality requirements. The sensor signals the economizer to open when the CO_2 level in the space exceeds the set point. A Carrier Comfort System programmable thermostat can be used to override the sensor if the outside-air temperature is too high or too low.

Condensate drain trap includes an overflow shutoff switch that can be wired to turn off the unit if the trap becomes plugged. Kit also includes a wire harness that can be connected to an alarm if desired. The transparent trap is designed for easy service and maintenance.

Discharge plenum directs the air discharge directly into the occupied space; integral horizontal and vertical louvers enable redirection of airflow. Accessory is available unpainted or painted. Field assembly is required (only applicable for vertical application).

Economizer (enthalpy controlled) provides ventilation air and “free” cooling if outside ambient temperature and humidity are suitable. It can also be used with CO_2 sensors to help meet indoor air quality requirements.

Electric resistance heat coils have an open-wire design and are mounted in a rigid frame. Safety cutouts for high temperature conditions are standard. Terminal block for single-point power connection is included.

Two-row hot water coils have copper tubes mechanically bonded to aluminum plate fins and non-ferrous headers.

Overhead suspension package includes necessary brackets to support units in horizontal ceiling installations.

Carrier’s line of thermostats provide both programmable and non-programmable capability with the new Debonair® line of commercial programmable thermostats. The TEMP System controls offer communication capability with staged heating and cooling, and the Commercial Electronic thermostats provide 7-day programmable capability for economical applications.

Return-air grille provides a protective barrier over the return-air opening and gives a finished appearance to units installed in the occupied space. Accessory is available unpainted or painted.

One-row steam coil has copper tubes and aluminum fins. The Inner Distributing Tube (IDT) design provides uniform temperatures across the coil face. The steam coil has a broad operating pressure range; up to 20 psi (138 kPag) at 260°F (126°C). The IDT steam coils are especially suited to applications where sub-freezing air enters the unit.

Subbase provides a stable, raised platform and room for condensate drain trap connection for vertical floor-mounted units. Accessory is available unpainted or painted.

UV-C germicidal lamps inhibit the growth of mold and fungus, which may grow on evaporator coil and condensate pan surfaces. The use of UV-C germicidal lamps reduces the foul odors that may result from this growth of mold and fungus. It also provides a self-cleaning function for the evaporator coil and drain pan.

DIMENSIONS

UNIT	ELECTRICAL CHARACTERISTICS	STD. UNIT WT.		CORNER A		CORNER B		CORNER C		CORNER D		CENTER OF GRAVITY			UNIT HEIGHT
		LBS.	KG.	LBS.	KG.	LBS.	KG.	LBS.	KG.	LBS.	KG.	X	Y	Z	H
38AUQ-07	208/230-3-60,460-3-60,575-3-60	444	201	134	61	97	44	90	41	123	56	22 [558.8]	25 [635.0]	13 [330.2]	42-3/8 [1076.0]
38AUQ-08	208/230-3-60,460-3-60,575-3-60	483	219	162	74	110	50	85	39	125	57	20 [508.0]	24 [609.6]	21 [533.4]	42-3/8 [1076.0]
38AUQ-12	208/230-3-60,460-3-60,575-3-60	575	261	186	84	126	57	106	48	157	71	21 [533.4]	24 [609.6]	23 [584.2]	50-3/8 [1279.2]

NOTES:
1. MINIMUM CLEARANCE (LOCAL CODES OR JURISDICTION MAY PREVAIL):
   A. BOTTOM TO COMBUSTIBLE SURFACES: 0 INCHES.
   B. OUTDOOR COIL, FOR PROPER AIR FLOW: 36 INCHES [914] ONE SIDE, 12 INCHES [305] THE OTHER. THE SIDE GETTING THE GREATER CLEARANCE IS OPTIONAL.
   C. OVERHEAD: 60 INCHES [1524], TO ASSURE PROPER OUTDOOR FAN OPERATION.
   D. BETWEEN UNITS: CONTROL BOX SIDE, 42 INCHES [1067] PER NEC.
   E. BETWEEN UNIT AND UNGROUNDED SURFACES: CONTROL BOX SIDE, 36 INCHES [914] PER NEC.
   F. BETWEEN UNIT AND BLOCK OR CONCRETE WALLS AND OTHER GROUNDED SURFACES: CONTROL BOX SIDE, 42 INCHES [1067] PER NEC.
2. WITH EXCEPTION OF THE CLEARANCE FOR THE OUTDOOR COIL AS STATED IN NOTE 1B, A REMOVABLE FENCE OR BARRICADE REQUIRES NO CLEARANCE.
3. UNITS MAY BE INSTALLED ON COMBUSTIBLE FLOORS MADE FROM WOOD OR CLASS A, B OR C ROOF COVERING MATERIAL.

SERVICE VALVE CONNECTIONS		
UNIT	SUCTION	LIQUID
38AUQ07	1-1/8 [28.6]	3/8 [9.5]
38AUQ08	1-1/8 [28.6]	1/2 [12.7]
38AUQ12	1-3/8 [34.9]	1/2 [12.7]

CG CENTER OF GRAVITY

DIRECTION OF AIR FLOW

DIMENSIONS IN [ ] ARE IN MM

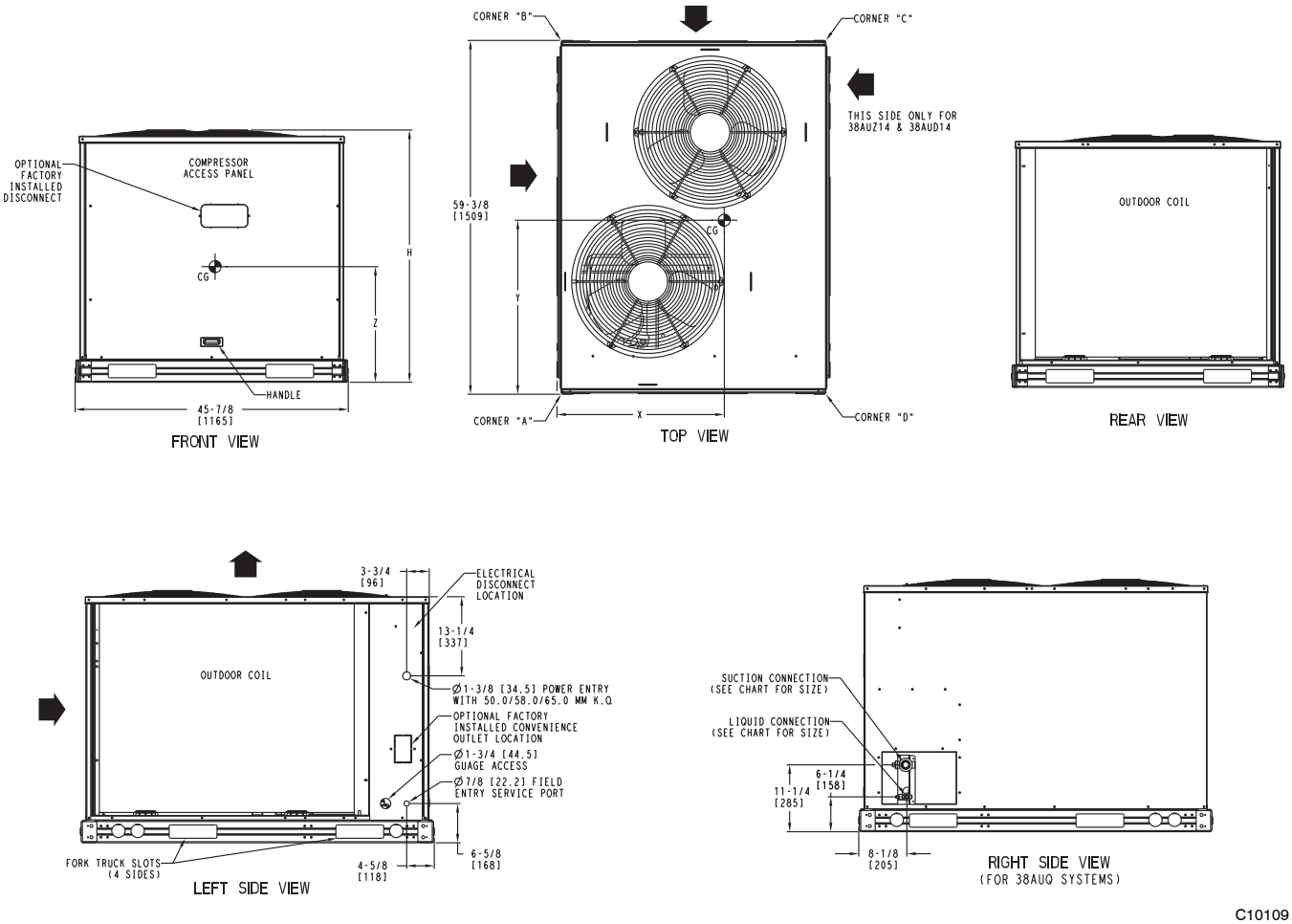

Fig. 2 - 38AUQ07-12

38AUQ

PERFORMANCE DATA

38AUQ07 - 40RUQ07 COOLING COMBINATION RATINGS

38AUQ07 / 40RUQ07				AMBIENT TEMPERATURE														
				85			95			105			115			125		
				EA (DB)			EA (DB)			EA (DB)			EA (DB)			EA (DB)		
				75	80	85	75	80	85	75	80	85	75	80	85	75	80	85
1800 Cfm	EA (wB)	58	THC	63.5	63.5	71.3	61.2	61.2	68.8	58.8	58.8	66.1	56.3	56.3	63.3	53.5	53.5	60.2
			SHC	55.7	63.5	71.3	53.7	61.2	68.8	51.6	58.8	66.1	49.3	56.3	63.3	46.9	53.5	60.2
		62	THC	66.4	66.4	68.3	63.5	63.5	66.8	60.5	60.5	65.2	57.3	57.3	63.5	54.0	54.0	61.5
			SHC	50.6	59.5	68.3	49.2	58.0	66.8	47.6	56.4	65.2	46.0	54.8	63.5	44.2	52.9	61.5
		67	THC	72.8	72.8	72.8	69.6	69.6	69.6	66.3	66.3	66.3	62.7	62.7	62.7	59.0	59.0	59.0
			SHC	41.6	50.5	59.4	40.2	49.1	58	38.7	47.6	56.6	37.2	46.1	55	35.6	44.5	53.4
		72	THC	79.7	79.7	79.7	76.2	76.2	76.2	72.5	72.5	72.5	68.6	68.6	68.6	64.5	64.5	64.5
			SHC	32.4	41.4	50.5	31.0	40.1	49.1	29.6	38.6	47.6	28.1	37.1	46.1	26.5	35.5	44.5
		76	THC	–	85.5	85.5	–	81.7	81.7	–	77.7	77.7	–	73.5	73.5	–	69.1	69.1
			SHC	–	34.2	44	–	32.8	42.5	–	31.4	41	–	29.9	39.4	–	28.4	37.8
2100 Cfm	EA (wB)	58	THC	66.7	66.7	74.9	64.2	64.2	72.2	61.6	61.6	69.3	58.9	58.9	66.2	55.9	55.9	62.9
			SHC	58.4	66.7	74.9	56.3	64.2	72.2	54.0	61.6	69.3	51.5	58.9	66.2	49.0	55.9	62.9
		62	THC	68.4	68.4	74.3	65.4	65.4	72.6	62.3	62.3	70.7	59.0	59.0	68.8	55.9	55.9	65.3
			SHC	54.1	64.2	74.3	52.5	62.6	72.6	50.8	60.8	70.7	49.1	59.0	68.8	46.6	55.9	65.3
		67	THC	74.8	74.8	74.8	71.5	71.5	71.5	67.9	67.9	67.9	64.2	64.2	64.2	60.3	60.3	60.3
			SHC	43.9	54.2	64.4	42.5	52.7	63	41.0	51.2	61.4	39.4	49.6	59.9	37.8	48.0	58.2
		72	THC	81.8	81.8	81.8	78.2	78.2	78.2	74.3	74.3	74.3	70.2	70.2	70.2	65.9	65.9	65.9
			SHC	33.4	43.8	54.1	32.0	42.3	52.7	30.5	40.9	51.2	29.0	39.3	49.6	27.4	37.7	47.9
		76	THC	–	87.7	87.7	–	83.7	83.7	–	79.5	79.5	–	75.1	75.1	–	70.4	70.4
			SHC	–	35.5	46.4	–	34.1	45	–	32.6	43.4	–	31.1	41.8	–	29.5	40.1
2400 Cfm	EA (wB)	58	THC	69.3	69.3	78.0	66.7	66.7	75.1	64.0	64.0	72.0	61.0	61.0	68.7	57.9	57.9	65.2
			SHC	60.7	69.3	78.0	58.4	66.7	75.1	56.0	64.0	72.0	53.4	61.0	68.7	50.6	57.9	65.2
		62	THC	70.1	70.1	79.5	66.9	66.9	78.0	64.0	64.0	74.7	61.0	61.0	71.3	57.9	57.9	67.6
			SHC	57.2	68.3	79.5	55.7	66.8	78.0	53.3	64.0	74.7	50.8	61.0	71.3	48.2	57.9	67.6
		67	THC	76.4	76.4	76.4	72.9	72.9	72.9	69.2	69.2	69.2	65.3	65.3	65.3	61.2	61.2	62.7
			SHC	46.1	57.6	69.1	44.6	56.1	67.6	43.1	54.6	66.1	41.5	52.9	64.4	39.8	51.2	62.7
		72	THC	83.5	83.5	83.5	79.6	79.6	79.6	75.6	75.6	75.6	71.3	71.3	71.3	66.9	66.9	66.9
			SHC	34.3	45.9	57.6	32.9	44.5	56.1	31.4	43.0	54.5	29.8	41.4	52.9	28.2	39.7	51.2
		76	THC	–	89.4	89.4	–	85.2	85.2	–	80.8	80.8	–	76.2	76.2	–	71.5	71.5
			SHC	–	36.7	48.8	–	35.2	47.3	–	33.7	45.7	–	32.2	44.1	–	30.5	42.4
2700 Cfm	EA (wB)	58	THC	71.6	71.6	80.6	68.9	68.9	77.5	66.0	66.0	74.2	62.9	62.9	70.8	59.6	59.6	67.1
			SHC	62.7	71.6	80.6	60.3	68.9	77.5	57.7	66.0	74.2	55.0	62.9	70.8	52.1	59.6	67.1
		62	THC	71.7	71.7	83.7	68.9	68.9	80.4	66.0	66.0	77.0	62.8	62.8	73.4	59.6	59.6	69.6
			SHC	59.7	71.7	83.7	57.3	68.9	80.4	54.9	66.0	77.0	52.3	62.8	73.4	49.5	59.6	69.6
		67	THC	77.6	77.6	77.6	74.0	74.0	74.0	70.2	70.2	70.5	66.2	66.2	68.7	62.0	62.0	66.9
			SHC	48.1	60.9	73.6	46.6	59.4	72.1	45.0	57.8	70.5	43.4	56.1	68.7	41.7	54.3	66.9
		72	THC	84.8	84.8	84.8	80.8	80.8	80.8	76.6	76.6	76.6	72.3	72.3	72.3	67.7	67.7	67.7
			SHC	35.1	48.0	60.8	33.7	46.5	59.3	32.2	44.9	57.7	30.6	43.3	56	28.9	41.6	54.3
		76	THC	–	90.7	90.7	–	86.4	86.4	–	81.9	81.9	–	77.2	77.2	–	–	–
			SHC	–	37.8	51.1	–	36.3	49.5	–	34.8	47.9	–	33.2	46.2	–	–	–
3000 Cfm	EA (wB)	58	THC	73.6	73.6	82.8	70.7	70.7	79.6	67.7	67.7	76.2	64.4	64.4	72.5	61.0	61.0	68.7
			SHC	64.4	73.6	82.8	61.9	70.7	79.6	59.2	67.7	76.2	56.3	64.4	72.5	53.3	61.0	68.7
		62	THC	73.6	73.6	86	70.7	70.7	82.6	67.7	67.7	79.1	64.4	64.4	75.3	61.0	61.0	71.3
			SHC	61.2	73.6	86	58.8	70.7	82.6	56.3	67.7	79.1	53.6	64.4	75.3	50.7	61.0	71.3
		67	THC	78.6	78.6	78.6	74.9	74.9	76.3	71.0	71.0	74.6	66.9	66.9	72.8	62.7	62.7	70.8
			SHC	50.0	64.0	77.9	48.5	62.4	76.3	46.9	60.8	74.6	45.2	59.0	72.8	43.4	57.1	70.8
		72	THC	85.9	85.9	85.9	81.8	81.8	81.8	77.5	77.5	77.5	73.0	73.0	73.0	68.3	68.3	68.3
			SHC	35.9	49.9	64	34.4	48.4	62.4	32.9	46.8	60.8	31.3	45.2	59.1	29.6	43.5	57.3
		76	THC	–	91.8	91.8	–	87.4	87.4	–	82.8	82.8	–	–	–	–	–	–
			SHC	–	38.8	53.2	–	37.3	51.7	–	35.7	50.0	–	–	–	–	–	–

LEGEND:

THC – Total Cooling Capacity, Gross (1000 Btu/h)

SHC – Sensible Cooling Capacity, Gross (1000 Btu/h)

PERFORMANCE DATA (cont.)

38AUQ08 - 40RUQ08 COOLING COMBINATION RATINGS

38AUQ08 / 40RUQ08				AMBIENT TEMPERATURE														
				85			95			105			115			125		
				EA (dB)			EA (dB)			EA (dB)			EA (dB)			EA (dB)		
				75	80	85	75	80	85	75	80	85	75	80	85	75	80	85
2250 Cfm	EA (wB)	58	THC	78.7	78.7	87.1	76.0	76.0	84.1	73.1	73.1	80.9	70.0	70.0	77.4	66.6	66.6	73.7
			SHC	70.4	78.7	87.1	68	76.0	84.1	65.4	73.1	80.9	62.6	70.0	77.4	59.5	66.6	73.7
		62	THC	83.6	83.6	83.6	80.1	80.1	80.1	76.3	76.3	77.5	72.3	72.3	75.5	68.0	68.0	73.4
			SHC	63.1	72.0	80.9	61.5	70.4	79.3	59.7	68.6	77.5	57.9	66.7	75.5	55.8	64.6	73.4
		67	THC	91.4	91.4	91.4	87.6	87.6	87.6	83.5	83.5	83.5	79.1	79.1	79.1	74.3	74.3	74.3
			SHC	51.8	60.8	69.7	50.3	59.2	68.2	48.6	57.5	66.5	46.8	55.8	64.7	45.0	53.9	62.8
		72	THC	99.9	99.9	99.9	95.7	95.7	95.7	91.3	91.3	91.3	86.4	86.4	86.4	81.2	81.2	81.2
			SHC	40.2	49.3	58.4	38.7	47.7	56.8	37.0	46.1	55.1	35.3	44.4	53.4	33.5	42.5	51.5
		76	THC	–	107.1	107.1	–	102.6	102.6	–	97.8	97.8	–	92.6	92.6	–	87.0	87.0
			SHC	–	39.9	49.7	–	38.4	48.1	–	36.8	46.4	–	35.1	44.6	–	33.3	42.7
2625 Cfm	EA (wB)	58	THC	82.8	82.8	91.6	79.9	79.9	88.4	76.8	76.8	84.9	73.4	73.4	81.1	69.7	69.7	77.1
			SHC	74.0	82.8	91.6	71.4	79.9	88.4	68.6	76.8	84.9	65.6	73.4	81.1	62.3	69.7	77.1
		62	THC	86.1	86.1	88.2	82.4	82.4	86.3	78.5	78.5	84.3	74.3	74.3	82.1	69.9	69.9	79.8
			SHC	67.8	78.0	88.2	66.1	76.2	86.3	64.2	74.3	84.3	62.1	72.1	82.1	60.0	69.9	79.8
		67	THC	94.0	94.0	94.0	90.0	90.0	90.0	85.6	85.6	85.6	81.0	81.0	81.0	76.0	76.0	76.0
			SHC	55.0	65.3	75.6	53.4	63.7	73.9	51.7	62.0	72.2	49.9	60.2	70.4	48.0	58.2	68.5
		72	THC	102.6	102.6	102.6	98.2	98.2	98.2	93.5	93.5	93.5	88.4	88.4	88.4	83.0	83.0	83.0
			SHC	41.8	52.1	62.5	40.2	50.6	60.9	38.5	48.9	59.2	36.8	47.1	57.4	34.9	45.2	55.5
		76	THC	–	109.9	109.9	–	105.2	105.2	–	100.1	100.1	–	94.6	94.6	–	88.7	88.7
			SHC	–	41.4	52.4	–	39.9	50.8	–	38.3	49.1	–	36.5	47.3	–	34.7	45.4
3000 Cfm	EA (wB)	58	THC	86.2	86.2	95.4	83.1	83.1	91.9	79.8	79.8	88.2	76.2	76.2	84.2	72.2	72.2	79.9
			SHC	77.1	86.2	95.4	74.3	83.1	91.9	71.3	79.8	88.2	68.1	76.2	84.2	64.6	72.2	79.9
		62	THC	88.1	88.1	94.7	84.4	84.4	92.6	80.4	80.4	90.2	76.3	76.3	87.1	72.3	72.3	82.5
			SHC	72.1	83.4	94.7	70.2	81.4	92.6	68.1	79.2	90.2	65.5	76.3	87.1	62.1	72.3	82.5
		67	THC	96.0	96.0	96.0	91.8	91.8	91.8	87.3	87.3	87.3	82.4	82.4	82.4	77.3	77.3	77.3
			SHC	58.1	69.6	81.1	56.4	68.0	79.5	54.7	66.2	77.7	52.9	64.4	75.9	50.9	62.4	73.9
		72	THC	104.7	104.7	104.7	100.1	100.1	100.1	95.2	95.2	95.2	89.9	89.9	89.9	84.3	84.3	84.3
			SHC	43.2	54.9	66.5	41.6	53.3	64.9	40.0	51.6	63.2	38.2	49.8	61.3	36.3	47.9	59.4
		76	THC	–	112.1	112.1	–	107.1	107.1	–	101.8	101.8	–	96.2	96.2	–	90.1	90.1
			SHC	–	42.9	55.0	–	41.3	53.4	–	39.7	51.7	–	37.9	49.9	–	36.1	48
3375 Cfm	EA (wB)	58	THC	89.1	89.1	98.5	85.8	85.8	94.9	82.3	82.3	91.0	78.5	78.5	86.8	74.4	74.4	82.2
			SHC	79.7	89.1	98.5	76.7	85.8	94.9	73.6	82.3	91.0	70.2	78.5	86.8	66.5	74.4	82.2
		62	THC	90.0	90.0	100.4	86.1	86.1	98.3	82.4	82.4	94.0	78.5	78.5	89.7	74.4	74.4	84.9
			SHC	75.9	88.1	100.4	73.9	86.1	98.3	70.7	82.4	94.0	67.4	78.5	89.7	63.9	74.4	84.9
		67	THC	97.6	97.6	97.6	93.2	93.2	93.2	88.6	88.6	88.6	83.6	83.6	83.6	78.2	78.2	79.0
			SHC	61.0	73.7	86.5	59.3	72.1	84.8	57.6	70.3	83	55.7	68.4	81.1	53.7	66.3	79.0
		72	THC	106.4	106.4	106.4	101.6	101.6	101.6	96.6	96.6	96.6	91.1	91.1	91.1	85.3	85.3	85.3
			SHC	44.6	57.5	70.3	43.0	55.8	68.7	41.3	54.1	66.9	39.5	52.3	65.1	37.6	50.4	63.1
		76	THC	–	113.8	113.8	–	108.7	108.7	–	103.2	103.2	–	97.4	97.4	–	91.1	91.1
			SHC	–	44.3	57.6	–	42.7	56	–	41.0	54.2	–	39.2	52.4	–	37.4	50.5
3750 Cfm	EA (wB)	58	THC	91.6	91.6	101.3	88.1	88.1	97.5	84.5	84.5	93.4	80.5	80.5	89.0	76.1	76.1	84.2
			SHC	81.9	91.6	101.3	78.8	88.1	97.5	75.5	84.5	93.4	71.9	80.5	89.0	68.1	76.1	84.2
		62	THC	91.7	91.7	104.7	88.2	88.2	100.7	84.5	84.5	96.5	80.5	80.5	91.9	76.2	76.2	87.0
			SHC	78.7	91.7	104.7	75.7	88.2	100.7	72.6	84.5	96.5	69.1	80.5	91.9	65.4	76.2	87.0
		67	THC	98.9	98.9	98.9	94.4	94.4	94.4	89.6	89.6	89.6	84.5	84.5	86.1	79.1	79.1	83.8
			SHC	63.8	77.8	91.7	62.1	76.1	90.0	60.3	74.2	88.1	58.3	72.2	86.1	56.2	70.0	83.8
		72	THC	107.8	107.8	107.8	102.8	102.8	102.8	97.7	97.7	97.7	92.1	92.1	92.1	86.1	86.1	86.1
			SHC	45.9	60.0	74.0	44.3	58.3	72.4	42.6	56.6	70.6	40.7	54.7	68.7	38.8	52.8	66.8
		76	THC	–	115.2	115.2	–	110	110	–	104.3	104.3	–	98.4	98.4	–	92.0	92.0
			SHC	–	45.6	60.1	–	44.0	58.4	–	42.3	56.7	–	40.5	54.9	–	38.6	52.9

LEGEND:

THC – Total Cooling Capacity, Gross (1000 Btu/h)

SHC – Sensible Cooling Capacity, Gross (1000 Btu/h)

PERFORMANCE DATA (cont.)

38AUQ12 - 40RUQ12 COOLING COMBINATION RATINGS

38AUQ12 / 40RUQ12				AMBIENT TEMPERATURE														
				85			95			105			115			125		
				EA (dB)			EA (dB)			EA (dB)			EA (dB)			EA (dB)		
				75	80	85	75	80	85	75	80	85	75	80	85	75	80	85
3000 Cfm	EA (wB)	58	THC	103	103	116.2	99.5	99.5	112.2	95.6	95.6	108	91.2	91.2	102.9	86.4	86.4	97.4
			SHC	89.9	103	116.2	86.8	99.5	112.2	83.4	95.6	108	79.6	91.2	102.9	75.4	86.4	97.4
		62	THC	108.7	108.7	110	104.1	104.1	107.7	99.1	99.1	105	93.6	93.6	102.2	87.7	87.7	98.8
			SHC	81.2	95.6	110	78.9	93.3	107.7	76.5	90.8	105	73.8	88.0	102.2	70.7	84.8	98.8
		67	THC	118.8	118.8	118.8	113.6	113.6	113.6	108	108	108	101.9	101.9	101.9	95.2	95.2	95.2
			SHC	66.9	81.4	95.9	64.7	79.2	93.7	62.4	76.8	91.3	59.8	74.2	88.7	57.0	71.4	85.9
		72	THC	129.4	129.4	129.4	123.7	123.7	123.7	117.5	117.5	117.5	110.7	110.7	110.7	103.3	103.3	103.3
			SHC	52.1	66.8	81.5	49.9	64.6	79.3	47.6	62.2	76.8	45.0	59.6	74.2	42.3	56.8	71.4
		76	THC	–	138.3	138.3	–	132.1	132.1	–	125.3	125.3	–	117.9	117.9	–	110	110
			SHC	–	54.9	70.8	–	52.7	68.4	–	50.3	65.8	–	47.7	63.1	–	45.0	60.2
3500 Cfm	EA (wB)	58	THC	108.2	108.2	122	104.3	104.3	117.6	100.1	100.1	112.8	95.3	95.3	107.5	90.1	90.1	101.6
			SHC	94.3	108.2	122	91.0	104.3	117.6	87.3	100.1	112.8	83.1	95.3	107.5	78.6	90.1	101.6
		62	THC	111.8	111.8	119.4	107	107	116.8	101.8	101.8	113.9	96.1	96.1	110.3	90.2	90.2	105.6
			SHC	86.7	103	119.4	84.3	100.6	116.8	81.7	97.8	113.9	78.6	94.5	110.3	74.8	90.2	105.6
		67	THC	122	122	122	116	116	116	111	111	111	104	104	104	97.0	97.0	97.0
			SHC	70.6	87.2	103.7	68.4	84.9	101.4	65.9	82.4	99	63.3	79.8	96.3	60.5	76.9	93.4
		72	THC	132.6	132.6	132.6	126.6	126.6	126.6	120	120	120	112.8	112.8	112.8	105	105	105
			SHC	53.7	70.5	87.2	51.5	68.2	84.9	49.0	65.7	82.4	46.4	63.1	79.7	43.7	60.3	76.9
		76	THC	–	141.5	141.5	–	134.9	134.9	–	127.7	127.7	–	120	120	–	111.7	111.7
			SHC	–	56.9	74.6	–	54.6	72.2	–	52.2	69.6	–	49.5	66.9	–	46.8	64.0
4000 Cfm	EA (wB)	58	THC	112.3	112.3	126.7	108.2	108.2	122	103.7	103.7	116.9	98.6	98.6	111.2	93.0	93.0	104.9
			SHC	98.0	112.3	126.7	94.4	108.2	122	90.4	103.7	116.9	86.0	98.6	111.2	81.1	93.0	104.9
		62	THC	114.4	114.4	127.8	109.4	109.4	124.7	104	104	121.7	98.7	98.7	115.5	93.1	93.1	109
			SHC	91.7	109.7	127.8	89.0	106.9	124.7	86.3	104	121.7	81.9	98.7	115.5	77.2	93.1	109
		67	THC	124	124	124	118.6	118.6	118.6	112.4	112.4	112.4	105.6	105.6	105.6	98.3	98.3	100.5
			SHC	74.1	92.6	111.2	71.8	90.3	108.8	69.3	87.8	106.3	66.6	85.1	103.5	63.7	82.1	100.5
		72	THC	135	135	135	128.7	128.7	128.7	121.8	121.8	121.8	114.4	114.4	114.4	106.5	106.5	106.5
			SHC	55.2	73.9	92.7	52.9	71.6	90.3	50.4	69.1	87.7	47.8	66.4	85	44.9	63.5	82.1
		76	THC	–	144	144	–	137.1	137.1	–	129.6	129.6	–	121.6	121.6	–	113.1	113.1
			SHC	–	58.8	78.3	–	56.4	75.9	–	53.9	73.3	–	51.3	70.5	–	48.5	67.6
4500 Cfm	EA (wB)	58	THC	115.9	115.9	130.7	111.5	111.5	125.7	106.7	106.7	120.3	101.3	101.3	114.2	95.4	95.4	107.6
			SHC	101.1	115.9	130.7	97.3	111.5	125.7	93.0	106.7	120.3	88.4	101.3	114.2	83.2	95.4	107.6
		62	THC	116	116	136.3	111.7	111.7	130.7	106.7	106.7	124.9	101.4	101.4	118.6	95.5	95.5	112
			SHC	96.6	116.4	136.3	92.7	111.7	130.7	88.6	106.7	124.9	84.1	101.4	118.6	79.2	95.5	112
		67	THC	126.1	126.1	126.1	120.2	120.2	120.2	113.8	113.8	113.8	106.8	106.8	110	99.4	99.4	107.2
			SHC	77.4	97.9	118.4	75.0	95.5	116	72.5	92.9	113.3	69.7	90.1	110	66.7	86.9	107.2
		72	THC	137	137	137	130.4	130.4	130.4	123.3	123.3	123.3	115.7	115.7	115.7	107.5	107.5	107.5
			SHC	56.6	77.2	97.9	54.2	74.8	95.5	51.7	72.3	92.9	49.0	69.5	90.1	46.2	66.6	87.1
		76	THC	–	145.9	145.9	–	138.8	138.8	–	131.1	131.1	–	122.8	122.8	–	114.2	114.2
			SHC	–	60.5	82.0	–	58.1	79.5	–	55.6	76.9	–	52.9	74.1	–	50.1	71.1
5000 Cfm	EA (wB)	58	THC	118.9	118.9	134.1	114.3	114.3	128.9	109.2	109.2	123.1	103.6	103.6	117	97.4	97.4	109.9
			SHC	103.7	118.9	134.1	99.7	114.3	128.9	95.3	109.2	123.1	90.4	103.6	117	85	97.4	109.9
		62	THC	119	119	139.2	114.4	114.4	133.8	109.3	109.3	127.9	103.6	103.6	121	97.5	97.5	114.1
			SHC	98.7	119	139.2	94.9	114.4	133.8	90.7	109.3	127.9	86.0	103.6	121	80.9	97.5	114.1
		67	THC	127.6	127.6	127.6	121.6	121.6	122.8	115	115	120	107.8	107.8	116.8	100.3	100.3	113.3
			SHC	80.6	102.9	125.3	78.1	100.5	122.8	75.5	97.7	120	72.6	94.7	116.8	69.4	91.4	113.3
		72	THC	138.5	138.5	138.5	131.8	131.8	131.8	124.5	124.5	124.5	116.7	116.7	116.7	108.4	108.4	108.4
			SHC	57.9	80.4	102.9	55.5	78.0	100.5	52.9	75.4	97.8	50.2	72.6	95	47.3	69.7	92.0
		76	THC	–	147.5	147.5	–	140.1	140.1	–	132.3	132.3	–	123.8	123.8	–	–	–
			SHC	–	62.2	85.5	–	59.8	83.0	–	57.2	80.3	–	54.5	77.5	–	–	–

LEGEND:

THC – Total Cooling Capacity, Gross (1000 Btu/h)

SHC – Sensible Cooling Capacity, Gross (1000 Btu/h)

38AUQ07 - 40RUQ07 HEATING COMBINATION RATINGS

38AUQ07 / 40RUQ07											
Return Air (°F db)	CFM (Standard Air)		Temperature Air Entering Outdoor Coil (°F db at 70% rh)								
			–10	0	10	17	30	40	47	50	60
55	1800	TH	21.4	27.7	34.5	39.7	50.1	58.6	64.4	67.0	75.6
		THI	19.7	25.5	31.6	36.2	43.9	55.9	64.4	67.0	75.6
		kW	2.33	2.60	2.89	3.12	3.60	4.01	4.29	4.43	4.91
	2400	TH	22.0	28.5	35.5	40.9	51.6	60.0	65.6	68.0	76.3
		THI	27.6	27.6	27.5	27.4	26.3	28.7	30.0	30.0	30.0
		kW	2.27	2.51	2.77	2.96	3.37	3.70	3.93	4.04	4.41
	3000	TH	22.4	29.0	36.2	41.6	52.5	60.6	65.9	68.3	76.2
		THI	20.6	26.7	33.1	37.9	46.0	57.9	65.9	68.3	76.2
		kW	2.23	2.45	2.68	2.86	3.23	3.50	3.71	3.80	4.11
65	1800	TH	19.1	25.4	32.2	37.3	47.6	56.4	62.4	65.1	73.8
		THI	17.5	23.3	29.5	34.0	41.7	53.9	62.4	65.1	73.8
		kW	2.57	2.86	3.18	3.43	3.95	4.42	4.73	4.87	5.39
	2400	TH	19.6	26.1	33.2	38.5	49.2	58.0	64.0	66.5	75.0
		THI	18.1	24.0	30.4	35.1	43.1	55.4	64.0	66.5	75.0
		kW	2.51	2.78	3.06	3.28	3.73	4.11	4.36	4.48	4.90
	3000	TH	20.0	26.6	33.8	39.2	50.2	59.0	64.7	67.1	75.4
		THI	18.4	24.5	31.0	35.8	44.0	56.3	64.7	67.1	75.4
		kW	2.47	2.72	2.98	3.18	3.58	3.91	4.13	4.24	4.59
70	1800	TH	17.8	24.1	31.0	36.1	46.4	55.2	61.3	64.0	72.8
		THI	16.4	22.2	28.4	32.9	40.6	52.7	61.3	64.0	72.8
		kW	2.69	2.99	3.33	3.59	4.13	4.62	4.95	5.09	5.63
	2400	TH	18.4	24.9	32.0	37.3	48.0	57.0	63.0	65.6	74.2
		THI	16.9	22.9	29.3	34.0	42.0	54.4	63.0	65.6	74.2
		kW	2.64	2.91	3.21	3.44	3.91	4.32	4.58	4.70	5.14
	3000	TH	18.7	25.4	32.6	38.0	49.0	57.9	63.9	66.4	74.7
		THI	17.2	23.3	29.8	34.7	42.9	55.3	63.9	66.4	74.7
		kW	2.60	2.86	3.14	3.34	3.77	4.12	4.35	4.46	4.83
80	1800	TH	15.3	21.5	28.4	33.5	43.8	52.5	58.9	61.5	70.6
		THI	14.1	19.8	26.0	30.6	38.4	50.1	58.9	61.5	70.6
		kW	2.93	3.27	3.64	3.92	4.50	5.02	5.41	5.56	6.13
	2400	TH	15.8	22.3	29.4	34.7	45.3	54.4	60.8	63.5	72.4
		THI	14.5	20.5	26.9	31.6	39.7	52.0	60.8	63.5	72.4
		kW	2.89	3.19	3.52	3.77	4.28	4.73	5.03	5.16	5.65
	3000	TH	16.1	22.7	30.0	35.4	46.3	55.6	61.9	64.6	73.2
		THI	14.8	20.9	27.5	32.3	40.6	53.1	61.9	64.6	73.2
		kW	2.86	3.14	3.45	3.68	4.14	4.54	4.80	4.92	5.34

LEGEND:

TH – Total Heating Capacity, Gross (1000 Btu/h)

THI – Integrated Heating Capacity, Gross (1000 Btu/h)

kW – Total Compressor Power Motor Input

38AUQ08 - 40RUQ08 HEATING COMBINATION RATINGS

38AUQ08 / 40RUQ08											
Return Air (°F db)	CFM (Standard Air)		Temperature Air Entering Outdoor Coil (°F db at 70% rh)								
			–10	0	10	17	30	40	47	50	60
55	2250	TH	31.6	39.6	47.8	53.8	66.9	78.2	86.1	89.6	101
		THI	29.1	36.4	43.8	49.0	58.6	74.7	86.1	89.6	101
		kW	3.83	4.14	4.45	4.67	5.18	5.65	5.96	6.08	6.53
	3000	TH	32.2	40.5	48.8	55.0	69.4	80.1	88.0	91.4	102
		THI	29.7	37.2	44.7	50.2	60.8	76.5	88.0	91.4	102
		kW	3.70	3.96	4.22	4.42	4.87	5.23	5.44	5.54	5.90
	3750	TH	32.6	40.9	49.4	55.8	70.3	81.2	88.8	92.1	103
		THI	30.0	37.6	45.3	50.9	61.6	77.5	88.8	92.1	103
		kW	3.62	3.86	4.09	4.26	4.67	4.97	5.15	5.23	5.54
65	2250	TH	29.5	37.4	45.6	51.4	63.7	75.8	83.8	87.4	98.6
		THI	27.1	34.4	41.8	46.9	55.8	72.4	83.8	87.4	98.6
		kW	4.24	4.56	4.90	5.14	5.65	6.19	6.55	6.67	7.15
	3000	TH	30.2	38.3	46.7	52.7	65.8	77.8	85.8	89.2	100
		THI	27.7	35.2	42.8	48.1	57.7	74.3	85.8	89.2	100
		kW	4.12	4.40	4.68	4.88	5.32	5.75	6.00	6.10	6.48
	3750	TH	30.6	38.8	47.3	53.5	67.3	78.9	86.7	90.0	101
		THI	28.1	35.7	43.4	48.8	59.0	75.4	86.7	90.0	101
		kW	4.04	4.29	4.54	4.72	5.12	5.50	5.68	5.77	6.10
70	2250	TH	28.3	36.2	44.4	50.3	62.3	73.7	82.5	86.2	97.4
		THI	26.0	33.3	40.6	45.9	54.6	70.3	82.5	86.2	97.4
		kW	4.45	4.79	5.14	5.39	5.91	6.43	6.87	6.99	7.48
	3000	TH	28.9	37.1	45.5	51.4	64.2	76.6	84.6	88.1	98.9
		THI	26.6	34.1	41.7	46.9	56.2	73.1	84.6	88.1	98.9
		kW	4.33	4.62	4.92	5.12	5.57	6.03	6.29	6.40	6.79
	3750	TH	29.4	37.6	46.2	52.2	65.5	77.8	85.6	89.0	99.6
		THI	27.0	34.6	42.3	47.6	57.4	74.3	85.6	89.0	99.6
		kW	4.26	4.52	4.78	4.97	5.37	5.77	5.97	6.06	6.40
80	2250	TH	25.6	33.6	41.8	47.7	59.5	70.2	79.4	83.6	95.1
		THI	23.6	30.9	38.3	43.5	52.1	67.0	79.4	83.6	95.1
		kW	4.89	5.26	5.64	5.92	6.47	6.99	7.49	7.67	8.19
	3000	TH	26.3	34.5	42.9	49.0	61.2	72.7	82.1	85.7	96.6
		THI	24.2	31.7	39.3	44.7	53.6	69.5	82.1	85.7	96.6
		kW	4.78	5.10	5.42	5.65	6.12	6.57	6.93	7.05	7.46
	3750	TH	26.7	35.0	43.6	49.8	62.3	74.7	83.3	86.7	97.3
		THI	24.5	32.2	39.9	45.4	54.6	71.3	83.3	86.7	97.3
		kW	4.71	5.00	5.29	5.50	5.90	6.33	6.59	6.69	7.04

LEGEND:

TH – Total Heating Capacity, Gross (1000 Btu/h)

THI – Integrated Heating Capacity, Gross (1000 Btu/h)

kW – Total Compressor Power Motor Input

38AUQ12 - 40RUQ12 HEATING COMBINATION RATINGS

38AUQ12 / 40RUQ12											
Return Air (°F db)	CFM (Standard Air)		Temperature Air Entering Outdoor Coil (°F db at 70% rh)								
			–10	0	10	17	30	40	47	50	60
55	3000	TH	35.9	46.0	56.1	64.2	81.1	96.6	106	110	123
		THI	33.1	42.3	51.4	58.5	71.0	92.3	106	110	123
		kW	4.46	4.83	5.18	5.45	6.03	6.59	6.83	6.95	7.37
	4000	TH	36.8	46.8	57.2	65.4	83.0	97.9	107	110	123
		THI	33.8	43.0	52.4	59.7	72.7	93.5	107	110	123
		kW	4.34	4.66	4.96	5.19	5.67	6.08	6.28	6.37	6.70
	5000	TH	37.2	47.4	57.9	66.2	84.8	98.3	107	110	123
		THI	34.2	43.5	53.0	60.3	74.3	93.9	107	110	123
		kW	4.26	4.55	4.82	5.03	5.50	5.79	5.96	6.04	6.31
65	3000	TH	32.5	43.0	53.3	61.2	77.9	92.9	104	108	120
		THI	29.9	39.5	48.8	55.9	68.2	88.7	104	108	120
		kW	4.94	5.36	5.75	6.05	6.66	7.24	7.58	7.71	8.15
	4000	TH	33.3	44.0	54.4	62.5	79.5	95.7	105	108	121
		THI	30.7	40.4	49.8	57.0	69.7	91.3	105	108	121
		kW	4.83	5.19	5.52	5.78	6.29	6.79	6.99	7.09	7.44
	5000	TH	33.8	44.6	55.0	63.3	80.7	96.3	105	109	121
		THI	31.1	41.0	50.4	57.7	70.7	92.0	105	109	121
		kW	4.76	5.09	5.39	5.61	6.07	6.47	6.65	6.74	7.03
70	3000	TH	30.7	41.4	51.9	59.7	76.3	90.9	102	107	119
		THI	28.3	38.0	47.5	54.4	66.8	86.8	102	107	119
		kW	5.20	5.64	6.06	6.36	7.00	7.57	7.98	8.11	8.57
	4000	TH	31.5	42.3	52.9	61.0	78.0	93.5	104	107	120
		THI	29.0	38.9	48.5	55.6	68.3	89.3	104	107	120
		kW	5.09	5.47	5.83	6.09	6.62	7.14	7.38	7.48	7.84
	5000	TH	32.0	42.9	53.5	61.8	79.0	95.2	104	108	120
		THI	29.4	39.4	49.1	56.3	69.2	90.9	104	108	120
		kW	5.02	5.37	5.69	5.93	6.39	6.85	7.03	7.11	7.41
80	3000	TH	26.9	37.8	49.0	56.6	73.0	86.9	98.3	103	117
		THI	24.8	34.8	44.9	51.6	63.9	83.0	98.3	103	117
		kW	5.75	6.23	6.72	7.04	7.73	8.32	8.85	8.98	9.46
	4000	TH	27.6	38.7	50.1	57.8	74.7	89.4	101	105	118
		THI	25.4	35.6	45.9	52.7	65.4	85.3	101	105	118
		kW	5.65	6.08	6.49	6.76	7.35	7.84	8.21	8.32	8.69
	5000	TH	28.0	39.3	50.6	58.5	75.7	90.8	102	106	118
		THI	25.8	36.1	46.3	53.4	66.3	86.8	102	106	118
		kW	5.59	5.98	6.35	6.60	7.11	7.57	7.84	7.93	8.24

LEGEND:

TH – Total Heating Capacity, Gross (1000 Btu/h)

THI – Integrated Heating Capacity, Gross (1000 Btu/h)

kW – Total Compressor Power Motor Input

ELECTRICAL DATA

WITHOUT POWERED CONVENIENCE OUTLET

UNIT SIZE	NOMINAL POWER SUPPLY	VOLTAGE RANGE		COMPRESSOR		OFM		POWER SUPPLY		DISCONNECT SIZE	
	V–Ph–Hz	Min	Max	RLA	LRA	Qty	FLA (ea)	MCA	MOCP	FLA	LRA
07	208/230–3–60	187	253	19.0	123	2	1.5	26.8/26.8	45/45	25/25	129/129
	460–3–60	414	506	9.7	62	2	0.9	13.9	20	13	66
	575–3–60	518	633	7.4	50	2	0.6	10.5	15	10	54
08	208/230–3–60	187	253	25.0	164	2	1.5	34.3/34.3	50/50	32/32	170/170
	460–3–60	414	506	12.2	100	2	0.9	17.1	25	16	104
	575–3–60	518	633	9.0	78	2	0.6	12.5	20	12	82
12	208/230–3–60	187	253	30.1	225	2	1.5	40.6/40.6	60/60	38/38	231/231
	460–3–60	414	506	16.7	114	2	0.8	22.5	30	21	118
	575–3–60	518	633	12.2	80	2	0.6	16.5	25	15	84

WITH POWERED CONVENIENCE OUTLET

UNIT SIZE	NOMINAL POWER SUPPLY	VOLTAGE RANGE		COMPRESSOR		OFM		POWER SUPPLY		DISCONNECT SIZE	
	V–Ph–Hz	Min	Max	RLA	LRA	Qty	FLA (ea)	MCA	MOCP	FLA	LRA
07	208/230–3–60	187	253	19.0	123	2	1.5	31.6/31.6	50/50	31/31	134/134
	460–3–60	414	506	9.7	62	2	0.9	16.1	25	16	68
	575–3–60	518	633	7.4	50	2	0.6	12.2	15	12	56
08	208/230–3–60	187	253	25.0	164	2	1.5	39.1/39.1	60/60	38/38	175/175
	460–3–60	414	506	12.2	100	2	0.9	19.3	30	19	106
	575–3–60	518	633	9.0	78	2	0.6	14.2	20	14	84
12	208/230–3–60	187	253	30.1	225	2	1.5	45.4/45.4	60/60	44/44	236/236
	460–3–60	414	506	16.7	114	2	0.8	24.7	30	24	120
	575–3–60	518	633	12.2	80	2	0.6	18.2	30	17	86

ELECTRIC HEATER DATA

HEATER PART NO. CAELHEAT	SIZE	V-PH-Hz	FAN MOTOR Hp	FAN MOTOR kW	FAN MOTOR FLA	ELECTRIC HEATER(S) Nominal Capacity (kW)	Actual Capacity (kW) Stage 1	Actual Capacity (kW) Stage 2	Actual Capacity (kW) Total	FLA	MCA*	MOCP*
001A00	40RUQ 07–12	208-3-60	1.3†	0.97	7.6	5	3.8	—	3.8	10.4	22.5	25
			2.4†	1.79	11.0	5	3.8	—	3.8	10.4	26.8	35
			2.4	1.79	5.2	5	3.8	—	3.8	10.4	19.5	20
			2.9	2.16	7.5	5	3.8	—	3.8	10.4	22.4	25
			3.7	2.76	10.2	5	3.8	—	3.8	10.4	25.8	30
		240-3-60	1.3†	0.97	7.6	5	5.0	—	5.0	12.0	24.5	25
			2.4†	1.79	11.0	5	5.0	—	5.0	12.0	28.8	35
			2.4	1.79	5.2	5	5.0	—	5.0	12.0	21.5	25
			2.9	2.16	7.5	5	5.0	—	5.0	12.0	24.4	25
			3.7	2.76	10.2	5	5.0	—	5.0	12.0	27.8	30
002A00		480-3-60	2.4	1.79	2.6	5	5.0	—	5.0	6.00	10.8	15
			2.9	2.16	3.4	5	5.0	—	5.0	6.00	11.8	15
			3.7	2.76	4.8	5	5.0	—	5.0	6.00	13.5	15
003A00		575-3-60	1.0	0.75	1.4	5	5.0	—	5.0	5.00	8.0	15
			2.0	1.49	2.3	5	5.0	—	5.0	5.00	9.2	15
			3.0	2.24	3.8	5	5.0	—	5.0	5.00	11.0	15
004A00		208-3-60	1.3†	0.97	7.6	10	7.5	—	7.5	20.8	35.6	40
			2.4†	1.79	11.0	10	7.5	—	7.5	20.8	39.8	40
			2.4	1.79	5.2	10	7.5	—	7.5	20.8	32.6	35
			2.9	2.16	7.5	10	7.5	—	7.5	20.8	35.4	40
			3.7	2.76	10.2	10	7.5	—	7.5	20.8	38.8	40
		240-3-60	1.3†	0.97	7.6	10	10.0	—	10.0	24.1	39.6	40
			2.4†	1.79	11.0	10	10.0	—	10.0	24.1	43.8	50
			2.4	1.79	5.2	10	10.0	—	10.0	24.1	36.6	40
			2.9	2.16	7.5	10	10.0	—	10.0	24.1	39.4	40
			3.7	2.76	10.2	10	10.0	—	10.0	24.1	42.8	50
005A00		480-3-60	2.4	1.79	2.6	10	10.0	—	10.0	12.0	18.3	20
			2.9	2.16	3.4	10	10.0	—	10.0	12.0	19.3	20
			3.7	2.76	4.8	10	10.0	—	10.0	12.0	21.0	25
006A00		575-3-60	1.0	0.75	1.4	10	10.0	—	10.0	10.0	14.3	15
			2.0	1.49	2.3	10	10.0	—	10.0	10.0	15.4	20
			3.0	2.24	3.8	10	10.0	—	10.0	10.0	17.3	20
007A00		208-3-60	1.3†	0.97	7.6	15	11.3	—	11.3	31.3	48.6	50
			2.4†	1.79	11.0	15	11.3	—	11.3	31.3	52.9	60
			2.4	1.79	5.2	15	11.3	—	11.3	31.3	45.6	50
			2.9	2.16	7.5	15	11.3	—	11.3	31.3	48.5	50
			3.7	2.76	10.2	15	11.3	—	11.3	31.3	51.9	60
		240-3-60	1.3†	0.97	7.6	15	15.0	—	15.0	36.1	54.6	60
			2.4†	1.79	11.0	15	15.0	—	15.0	36.1	58.9	60
			2.4	1.79	5.2	15	15.0	—	15.0	36.1	51.6	60
			2.9	2.16	7.5	15	15.0	—	15.0	36.1	54.5	60
			3.7	2.76	10.2	15	15.0	—	15.0	36.1	57.9	60

LEGEND

FLA — Full Load Amps
Hp — Horsepower
MCA — Minimum Circuit Amps
MOCP — Maximum Overcurrent Protection (Amps)

* Values shown are for single-point connection of electric heat accessory and air handler.

† Single-phase motors. All other motors are 3-phase.

NOTES:

1. Electrical resistance heaters are rated at 240 v, 480 v, or 575 v. To determine heater capacity (kW) at unit nameplate multiply the 240-v, 480-v, or 575-v capacity (kW) by the factor shown in the table below for the unit voltage.

HEATER RATING VOLTAGE	ACTUAL HEATER VOLTAGE 200	208	230	240	400	440	460	480	550	575	600
240	0.694	0.751	0.918	1	—	—	—	—	—	—	—
480	—	—	—	—	0.694	0.84	0.918	1	—	—	—
575	—	—	—	—	—	—	—	—	0.915	1	1.089

2. The following equation converts kW of heat energy to Btuh: kW x 3,412 = Btuh.
3. Heater contactor coils are 24 v and require 8 va holding current.
4. Electric heaters are tested and ETL approved at maximum total external static pressure of 1.9 in. wg.
5. MCA and MOCP values apply to both standard and alternate factory-supplied motors.
6. Approximate shipping weight for CAELHEAT001A00-015A00 is 55 lb (25 kg) each.

ELECTRICAL DATA (cont.)

ELECTRIC HEATER DATA (cont.)

HEATER PART NO. CAELHEAT	SIZE	V-PH-Hz	FAN MOTOR			ELECTRIC HEATER(S)					MCA*	MOCP*
						Nominal Capacity (kW)	Actual Capacity (kW)			FLA		
			Hp	kW	FLA		Stage 1	Stage 2	Total			
008A00	40RUQ 07–12	480-3-60	2.4	1.79	2.6	15	15.0	—	15.0	18.0	25.8	30
			2.9	2.16	3.4	15	15.0	—	15.0	18.0	26.8	30
			3.7	2.76	4.8	15	15.0	—	15.0	18.0	28.6	30
009A00		575-3-60	1.0	0.75	1.4	15	15.0	—	15.0	15.1	20.6	25
			2.0	1.49	2.3	15	15.0	—	15.0	15.1	21.7	25
			3.0	2.24	3.8	15	15.0	—	15.0	15.1	23.6	25
010A00		208-3-60	1.3†	0.97	7.6	25	11.3	7.5	18.8	52.1	74.7	80
			2.4†	1.79	11.0	25	11.3	7.5	18.8	52.1	78.9	80
			2.4	1.79	5.2	25	11.3	7.5	18.8	52.1	71.7	80
			2.9	2.16	7.5	25	11.3	7.5	18.8	52.1	74.5	80
			3.7	2.76	10.2	25	11.3	7.5	18.8	52.1	77.9	80
		240-3-60	1.3†	0.97	7.6	25	15.0	10.0	25.0	60.1	84.7	90
			2.4†	1.79	11.0	25	15.0	10.0	25.0	60.1	88.9	90
			2.4	1.79	5.2	25	15.0	10.0	25.0	60.1	81.7	90
			2.9	2.16	7.5	25	15.0	10.0	25.0	60.1	84.6	90
			3.7	2.76	10.2	25	15.0	10.0	25.0	60.1	87.9	90
011A00		480-3-60	2.4	1.79	2.6	25	15.0	10.0	25.0	30.1	40.8	50
			2.9	2.16	3.4	25	15.0	10.0	25.0	30.1	41.8	50
			3.7	2.76	4.8	25	15.0	10.0	25.0	30.1	43.6	50
012A00		575-3-60	1.0	0.75	1.4	25	15.0	10.0	25.0	25.1	33.1	35
			2.0	1.49	2.3	25	15.0	10.0	25.0	25.1	34.3	35
			3.0	2.24	3.8	25	15.0	10.0	25.0	25.1	36.1	40
013A00	40RUQ 08,12	208-3-60	2.4†	1.79	11.0	35	15.0	11.3	26.3	73.0	105.0	110
			2.4	1.79	5.2	35	15.0	11.3	26.3	73.0	97.7	100
			2.9	2.16	7.5	35	15.0	11.3	26.3	73.0	100.6	110
			3.7	2.76	10.2	35	15.0	11.3	26.3	73.0	104.0	110
		240-3-60	2.4†	1.79	11.0	35	20.0	15.0	35.0	84.2	119.0	125
			2.4	1.79	5.2	35	20.0	15.0	35.0	84.2	111.7	125
			2.9	2.16	7.5	35	20.0	15.0	35.0	84.2	114.6	125
			3.7	2.76	10.2	35	20.0	15.0	35.0	84.2	118.0	125
014A00		480-3-60	2.4	1.79	2.6	35	20.0	15.0	35.0	42.1	55.9	60
			2.9	2.16	3.4	35	20.0	15.0	35.0	42.1	56.9	60
			3.7	2.76	4.8	35	20.0	15.0	35.0	42.1	58.6	60
015A00		575-3-60	2.0	1.49	2.3	35	20.0	15.0	35.0	35.1	46.8	50
			3.0	2.24	3.8	35	20.0	15.0	35.0	35.1	48.7	50

LEGEND

FLA — Full Load Amps
Hp — Horsepower
MCA — Minimum Circuit Amps
MOCP — Maximum Overcurrent Protection (Amps)

* Values shown are for single-point connection of electric heat accessory and air handler.
† Single-phase motors. All other motors are 3-phase.

NOTES:

1. Electrical resistance heaters are rated at 240 v, 480 v, or 575 v. To determine heater capacity (kW) at unit nameplate multiply the 240-v, 480-v, or 575-v capacity (kW) by the factor shown in the table below for the unit voltage.

HEATER RATING VOLTAGE	ACTUAL HEATER VOLTAGE										
	200	208	230	240	400	440	460	480	550	575	600
240	0.694	0.751	0.918	1	—	—	—	—	—	—	—
480	—	—	—	—	0.694	0.84	0.918	1	—	—	—
575	—	—	—	—	—	—	—	—	0.915	1	1.089

2. The following equation converts kW of heat energy to Btuh: kW x 3,412 = Btuh.
3. Heater contactor coils are 24 v and require 8 va holding current.
4. Electric heaters are tested and ETL approved at maximum total external static pressure of 1.9 in. wg.
5. MCA and MOCP values apply to both standard and alternate factory-supplied motors.
6. Approximate shipping weight for CAELHEAT001A00-015A00 is 55 lb (25 kg) each.

TYPICAL PIPING AND WIRING

HORIZONTAL INSTALLATION

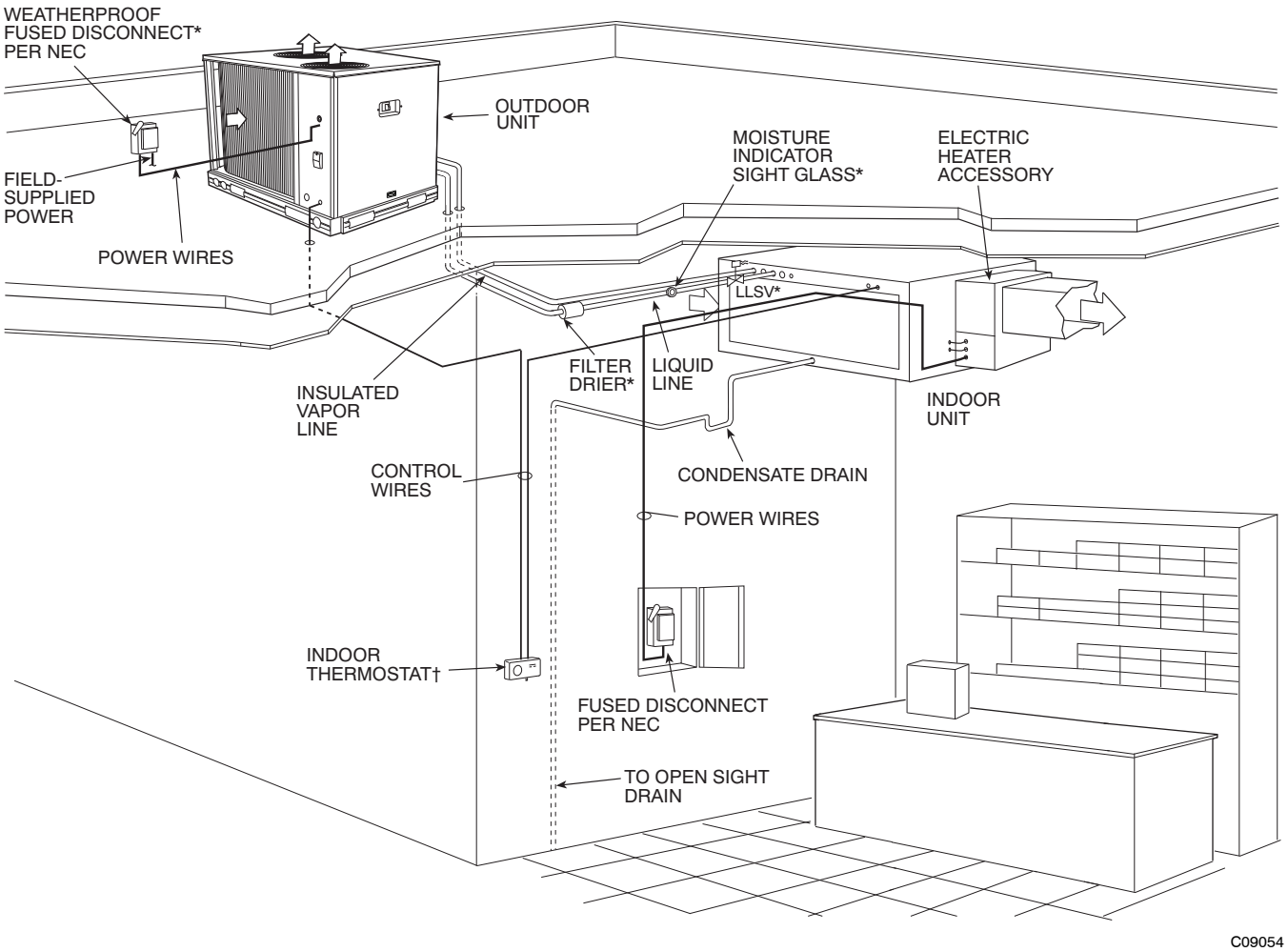

38AUQ

TYPICAL WIRING SCHEMATIC

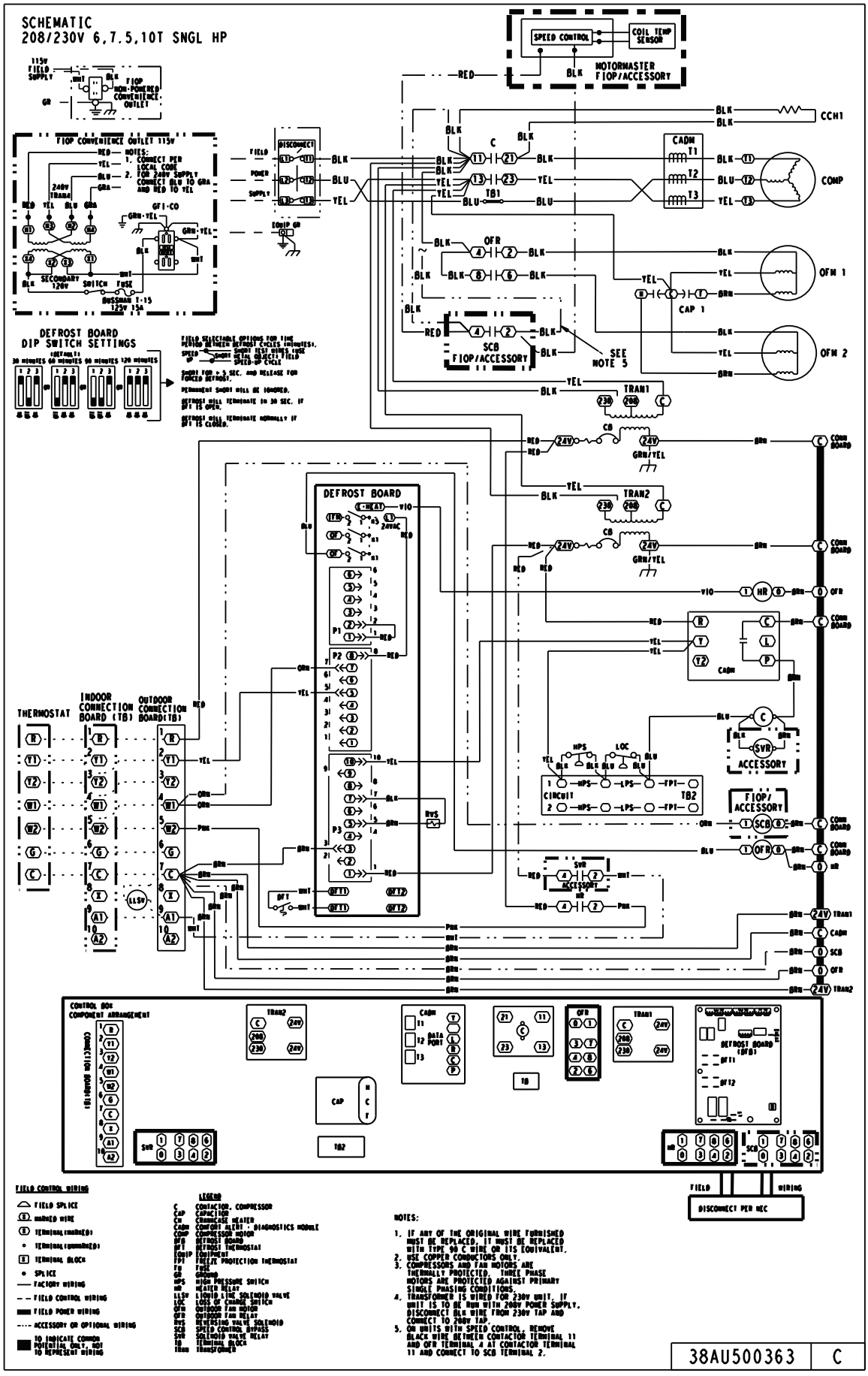

C10132

Fig. 3 - 38AUQ07-12 UNITS 230-3-60

APPLICATION DATA

REFRIGERANT LINE SIZING — Consider the length of the piping required between the outdoor and indoor units. The maximum allowable line length is 100 ft (30.5 m). See Maximum Vertical Separation Table below. Refrigerant vapor piping should be insulated

IMPORTANT: A refrigerant receiver is not provided with the unit. Do not install a receiver.

Maximum Vertical Separation*

UNIT 38AUQ	UNIT 40RUQ	DISTANCE FT (M)
		Unit 38AUQ Above Unit 40RuQ
07	07	50 (15.2)
08	08	60 (18.3)
12	12	60 (18.3)

* Vertical distance between indoor and outdoor units.

INSTALL FILTER DRIER(S) AND MOISTURE INDICATOR(S) — Every unit MUST have a bi-directional filter drier in the liquid line. Locate the filter drier at the indoor unit, close to the evaporator coil thermal expansion valve (TXV) inlets.

38AUQ units include one Puron-duty filter drier, shipped in cartons attached to the unit base pan. Remove the filter drier and prepare to install in the liquid line at the evaporator coil. Do not remove connection fitting plugs until ready to connect and braze the filter drier into the liquid line position.

Puron-duty Filter Drier(s)

Model-Size	Qty	Liquid Line OD	Desiccant Volume	Part Number Ref
38AUQ*07	1	3/8-in	8 cu. in.	KH43LG091
38AUQ*08	1	1/2-in	16 cu. in.	KH43LG085
38AUQ*12	1	1/2-in	16 cu. in.	KH43LG085

Installation of liquid line moisture indicating sight glass in each circuit is recommended. Locate the sight glass(es) between the outlet of the filter drier and the TXV inlet.

Refer to Refrigerant Specialties Part Numbers Table for recommendations on refrigeration specialties.

Select the filter drier for maximum unit capacity and minimum pressure drop. Complete the refrigerant piping from the indoor unit to the outdoor unit before opening the liquid and suction lines at the outdoor unit.

INSTALL LIQUID LINE SOLENOID VALVE — It is recommended that a bi-directional solenoid valve be placed in the main liquid line (see Figs. 4 & 5) between the outdoor unit and the indoor coil. Locate the solenoid valve at the end of the liquid line, near the outdoor unit connections, with flow direction arrow pointed at the outdoor unit. Refer to Refrigerant Specialties Part Numbers Table below. (A liquid line solenoid valve is required when the liquid line length exceeds 75 ft [23 m].) This valve prevents refrigerant migration (which causes oil dilution) to the compressor during the off cycle, at low outdoor ambient temperatures. Wire the solenoid according to the unit label

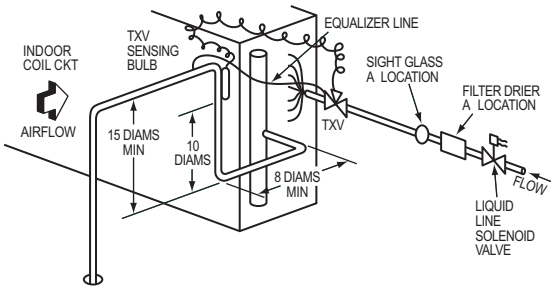

LEGEND
TXV — Thermostatic Expansion Valve

C10133

Fig. 4 - Location of Sight Glass(es) and Filter Driers (typical 38AUQ/40RUQ size 07 & 08 system)

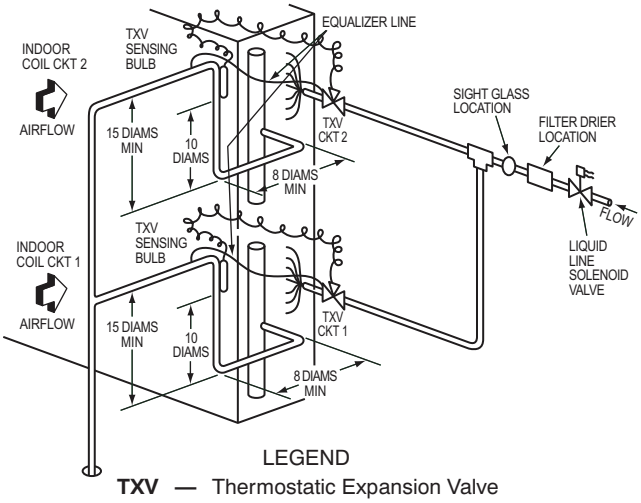

LEGEND
TXV — Thermostatic Expansion Valve

A10134

Fig. 5 - Location of Sight Glass(es) and Filter Driers (typical 38AUQ/40RUQ size 12 system)

Refrigerant Specialties Part Numbers

LIQUID LINE SIZE (in.)	LIQUID LINE SOLENOID VALVE (LLSV)	LLSV COIL	SIGHT GLASS	FILTER DRIER
3/8	ALC-066208	AMG-24/50-60	HMI-1TT3	Provided with unit.
1/2	ALC-066209†	AMG-24/50-60	HMI-1TT4	
5/8	ALC-066212	AMG-24/50-60	HMI-1TT5	

GUIDE SPECIFICATIONS - 38AUQ07-12

Split System Heat Pump Outdoor Unit with PURON® Refrigerant

HVAC Guide Specifications — Section 15678

Size Range: **66,000 to 106,000 Btuh Heating**
6 to 10 Nominal Tons Cooling

Carrier Model Numbers: **38AUQ07 thru 12**

Part 1 — General

1.01 SYSTEM DESCRIPTION

A. Outdoor-mounted, electrically controlled, air-cooled split system heat pump suitable for on-the-ground or rooftop installation. Unit shall consist of a scroll air-conditioning compressor assembly, an air-cooled coil, propeller-type condenser fans, and a control box. Unit shall discharge supply air upward as shown on contract drawings. Unit shall function as the outdoor component of an air to air electric heat pump system.

B. Unit must be designed with a Puron® (R-410A) refrigerant circuit to match Packaged Heat Pump Air Handling Unit(s), 40RUQ for matched systems approved by the manufacturer.

1.02 QUALITY ASSURANCE

A. Unit shall be rated in accordance with ARI Standard 340/360.

B. Unit construction shall comply with ANSI/ASHRAE 15 safety code latest revision and comply with NEC.

C. Unit shall be constructed in accordance with UL 1995 standard and shall carry the UL and UL, Canada label.

D. Unit cabinet shall be capable of withstanding 500-hour salt spray exposure per ASTM B117 (scribed specimen).

E. Air-cooled outdoor coils shall be leak tested at 150 psig and pressure tested at 650 psig and qualified to UL burst test at 1980 psig.

F. Unit shall be manufactured in a facility registered to ISO 9001:2000 manufacturing quality standard.

1.03 DELIVERY, STORAGE AND HANDLING

Unit shall be shipped as single package only, and shall be stored and handled according to unit manufacturer's recommendations.

1.04 WARRANTY (FOR INCLUSION BY SPECIFYING ENGINEER)

Part 2 — Products

2.01 EQUIPMENT

A. General:
Factory-assembled, single piece, air-cooled split system heat pump. Contained within the unit enclosure shall be all factory wiring, piping, controls, compressor, holding charge Puron® (R-410A), and special features required prior to field start-up.

B. Unit Cabinet:

1. Unit cabinet shall be constructed of galvanized steel, bonderized and coated with a pre-painted baked enamel finish.
2. A heavy-gauge roll-formed perimeter base rail with forklift slots and lifting holes shall be provided to facilitate rigging.

C. Fans:

1. Condenser fans shall be direct driven, propeller type, discharging air vertically upward.
2. Fan blades shall be balanced.
3. Condenser fan discharge openings shall be equipped with PVC coated steel wire safety guards.
4. Condenser fan and motor shaft shall be corrosion resistant.

D. Compressor:

1. Compressor shall be of the hermetic scroll type.
2. Compressor shall be mounted on rubber grommets.
3. Compressor shall include overload protection.
4. Compressors shall be equipped with a crankcase heater.
5. Compressor shall be equipped with internal high discharge temperature protection.

E. Coil:
   1. Coil shall be air-cooled and circuited for sub cooling during cooling mode of operation.
   2. Coil shall be constructed of aluminum fins (copper fins optional) mechanically bonded to internally grooved seamless copper tubes which are then cleaned, dehydrated, and sealed.

F. Refrigeration Components and Operation:
   1. Refrigeration circuit components shall include liquid line service valve, suction line service valve, a full charge of compressor oil, and a holding charge of refrigerant.
   2. Unit shall be capable of starting and running up to 125 F (52 C) and down to 35 F (2 C) ambient outdoor temperature.
   3. Unit shall operate at +/- 10% from rated voltage

G. Controls and Safeties:
   1. Minimum control functions shall include:
      a. Control wire terminal blocks.
      b. Compressor lockout on auto-reset safety until reset from thermostat.
      c. Each unit shall utilize the Comfort Alert™ Diagnostic Board that provides:
         (1.) System Pressure Trip fault code indication
         (2.) Short Cycling fault code indication
         (3.) Locked Rotor fault code indication
         (4.) Open Circuit fault code indication
         (5.) Reverse Phase 3 fault code indication
         (6.) Welded Contactor fault code indication
         (7.) Low Voltage fault code indication
         (8.) Anti-short cycle protection
         (9.) Phase reversal protection
   2. Minimum safety devices which are equipped with automatic reset (after resetting first at thermostat), shall include:
      a. High discharge pressure protection switch.
      b. Loss-of-charge protection switch.

H. Electrical Requirements:
   1. Unit electrical power shall be single-point connection.
   2. Unit control circuit shall contain a 75VA - 24-v transformer for unit control.

I. Special Features:
   1. Unit-Mounted, Non-Fused Disconnect Switch:
      Switch shall be factory-installed and internally mounted. NEC and UL-approved non-fused switch shall provide unit power shutoff. Switch shall be accessible from outside the unit and shall provide power off lockout capability.
   2. Convenience Outlet:
      a. Powered convenience outlet.
         (1.) Outlet shall be powered from main line power to the rooftop unit.
         (2.) Outlet shall be powered from line side or load side of disconnect by installing contractor, as required by code. If outlet is powered from load side of disconnect, unit electrical ratings shall be UL certified and rated for additional outlet amperage.
         (3.) Outlet shall be factory-installed and internally mounted with easily accessible 115-v female receptacle.
         (4.) Outlet shall include 15 amp GFI receptacles with independent fuse protection.
         (5.) Voltage required to operate convenience outlet shall be provided by a factory-installed step-down transformer.
         (6.) Outlet shall be accessible from outside the unit.
         (7.) Outlet shall include a field-installed “Wet in Use” cover.
      b. Non-Powered convenience outlet.
         (1.) Outlet shall be powered from a separate 115/120v power source.
         (2.) A transformer shall not be included.
         (3.) Outlet shall be factory-installed and internally mounted with easily accessible 115-v female receptacle.
         (4.) Outlet shall include 15 amp GFI receptacles with independent fuse protection.

(5.) Outlet shall be accessible from outside the unit.

(6.) Outlet shall include a field-installed "Wet in Use" cover.

3. Low-Ambient Temperature Control:
   A low-ambient temperature control shall be available as a factory-installed option or as a field-installed accessory. This low-ambient control shall regulate speed of the condenser-fan motors in response to the saturated condensing temperature of the unit. The control shall maintain correct condensing pressure at outdoor temperatures down to –20 F (-29 C).
4. Optional Outdoor Coil Materials:
   a. Pre-Coated Aluminum-Fin Coils:
      Coils shall have a durable epoxy-phenolic coating to provide protection in mildly corrosive coastal environments. Coating shall be applied to the aluminum fin stock prior to the fin stamping process to create an inert barrier between the aluminum fin and copper tube. Epoxy-phenolic barrier shall minimize galvanic action between dissimilar metals.
   b. E-Coated Aluminum-Fin Coils:
      Coils shall have a flexible epoxy polymer coating uniformly applied to all coil surface areas without material bridging between fins. Coating process shall ensure complete coil encapsulation. Color shall be high gloss black with gloss requirements of 60° of 65 to 90% per ASTM D523-89. Uniform dry film thickness from 0.8 to 1.2 mil on all surface areas including fin edges. Superior hardness characteristics of 2H per ASTM D3363-92A and cross hatch adhesion of 4B-5B per ASTM D3359-93. Impact resistance shall be up to 160 in./lb (ASTM D2794-93). Humidity and water immersion resistance shall be up to a minimum of 1000 and 250 hours respectively (ASTM D2247-92 and ASTM D870-92). Corrosion durability shall be confirmed through testing to no less than 1000 hours salt spray per ASTM B117-90. Coil construction shall be aluminum fins mechanically bonded to copper tubes.
5. Thermostat Controls:
   a. Programmable multi-stage thermostat with 7-day clock, holiday scheduling, large backlit display, remote sensor capability, and Title 24 compliance.
   b. Commercial electronic thermostat with 7-day time clock, auto-changeover, multistage capability, and large LCD temperature display.
   c. Carrier PremierLink™ Controller – Field Installed:
      This control will function with CCN and ComfortVIEW™ software. It shall also be compatible with ComfortLink controllers. It shall be ASHRAE 62-99 compliant. It shall accept a CO_2 sensor in the conditioned space and be Demand Control Ventilation (DCV) ready. The communication rate must be 38.4K or faster.
6. Louvered hail Guard Package:
   Louvered hail guard package shall protect coils against damage from hail and other flying debris.
7. Outdoor Coil Grille:
   Grille shall add decorative appearance to unit and protect outdoor coil from large objects and vandalism.

Copyright 2010 Carrier Corp. • 7310 W. Morris St. • Indianapolis, IN 46231 Printed in U.S.A. Edition Date: 02/10 **Catalog No: 38AUQ–01PD**

Manufacturer reserves the right to change, at any time, specifications and designs without notice and without obligations. Replaces: NEW