40MKCBC/24AHA4**
40MKCBC/124ANS**
40MKQBC/25HHA4**
40MKQBC/224ANS**
Cassette Ductless Split
Sizes 18 to 34

Installation Instructions

Fig. 1 - Indoor Unit, Outdoor Unit, and Remote Control

NOTE: **Read the entire instruction manual before starting the installation.**

TABLE OF CONTENTS

SAFETY CONSIDERATIONS	1
PARTS LIST	2
DIMENSIONS - INDOOR	4
DIMENSIONS - OUTDOOR	5
CLEARANCES - INDOOR	7
CLEARANCES - OUTDOOR	7
SYSTEM REQUIREMENTS	7
INSTALLATION	9
INSTALL INDOOR UNIT	9
INSTALL OUTDOOR UNIT	12
ELECTRICAL DATA	16
START-UP	20
TROUBLESHOOTING	23

⚠ WARNING

UNIT OPERATION AND SAFETY HAZARD

Failure to follow this warning could result in personal injury or equipment damage.

Puron refrigerant systems operate at higher pressures than standard R-22 systems. To avoid damage to the unit or possible personal injury, do not use R-22 service equipment or components on Puron refrigerant equipment.

SAFETY CONSIDERATIONS

Improper installation, adjustment, alteration, service, maintenance, or use can cause explosion, fire, electrical shock, or other conditions which may cause death, personal injury, or property damage. Consult a qualified installer, service agency, or your distributor or branch for information or assistance. The qualified installer or agency must use factory-authorized kits or accessories when modifying this product. Refer to the individual instructions packaged with the kits or accessories when installing.

Follow all safety codes. Wear safety glasses, protective clothing, and work gloves. Use quenching cloth for brazing operations. Have a fire extinguisher available. Read these instructions thoroughly and follow all warnings or cautions included in the unit literature and on labels attached to the unit. Consult local building codes and current editions of the National Electrical Code (NEC) NFPA 70. In Canada, refer to current editions of the Canadian electrical code CSA 22.1.

Recognize safety information. This is the safety-alert symbol ⚠ When you see this symbol on the unit and in instructions or manuals, be alert to the potential for personal injury. Understand these signal words; **DANGER**, **WARNING**, and **CAUTION**. These words are used with the safety-alert symbol. **DANGER** identifies the most serious hazards which **will** result in severe personal injury or death. **WARNING** signifies hazards which **could** result in personal injury or death. **CAUTION** is used to identify unsafe practices which **may** result in minor personal injury or product and property damage.

NOTE is used to highlight suggestions which **will** result in enhanced installation, reliability, or operation.

⚠ WARNING

ELECTRICAL SHOCK HAZARD

Failure to follow this warning could result in personal injury or death.

Before installing, modifying, or servicing system, main electrical disconnect switch must be in the OFF position. There may be more than 1 disconnect switch. Lock out and tag switch with a suitable warning label.

⚠ CAUTION

ENVIRONMENTAL HAZARD

Failure to follow this caution may result in environmental pollution.

Remove and recycle all components or materials (i.e. oil, refrigerant, etc.) before unit final disposal.

INSTALLATION

IMPORTANT: Effective January 1, 2015, all split systems and packaged air conditioners must be installed pursuant to applicable regional efficiency standards issued by the Department of Energy.

⚠ CAUTION

CUT HAZARD

Failure to follow this caution may result in personal injury.

Sheet metal parts have sharp edges or burrs, Use care and wear appropriate protective clothing and gloves when handling parts.

⚠ CAUTION

PERSONAL INJURY AND EQUIPMENT DAMAGE HAZARD

Failure to follow this caution may result in personal injury and / or equipment damage.

DO NOT operate the unit without a filter or with grille removed.

These instructions cover the installation and the start-up of the systems listed in Table 1.

Table 1 – Matched Systems

System Type	Nominal Capacity KBTU/Hr	Outdoor Unit		Indoor Unit
Cooling Only	018	24AHA418A003	124ANS018000	40MKCB18C--3
	024	24AHA424A003	124ANS024000	40MKCB34C--3
	030	24AHA430A003	124ANS030000	40MKCB34C--3
	034	24AHA436A003/5/6	124ANS036000	40MKCB34C--3
Heat Pump	024	25HHA424A003	224ANS024000	40MKQB34C--3
	030	25HHA430A003	224ANS030000	40MKQB34C--3
	034	25HHA436A003/5/6	224ANS036000	40MKQB34C--3

PARTS LIST

Indoor Unit

TXV Kit

The cassette type unit and horizontal discharge unit (24AHA/124ANS and 25HHA4/224ANS) installation would not be complete without the addition of the TXV kit. This can be found in the packaging of the indoor unit. If you do not have this kit, order the kit and install the outdoor and indoor units when this is available.

Below are figures of the kit and how and where the kit is included within the indoor unit packaging.

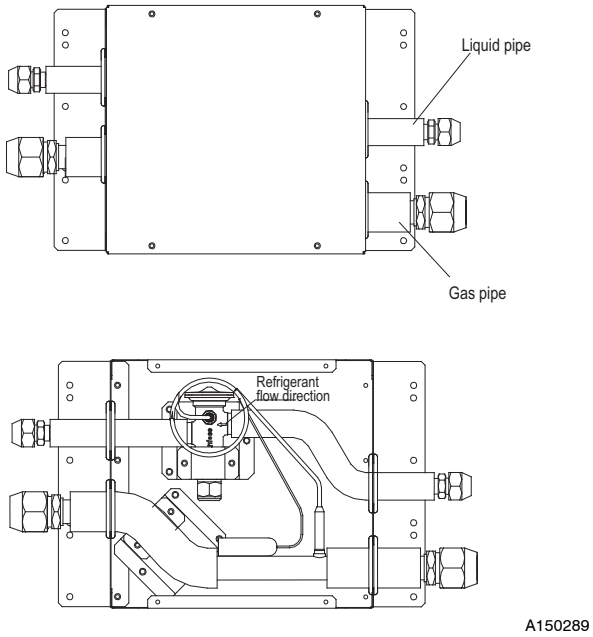

Fig. 2 - TXV Kit

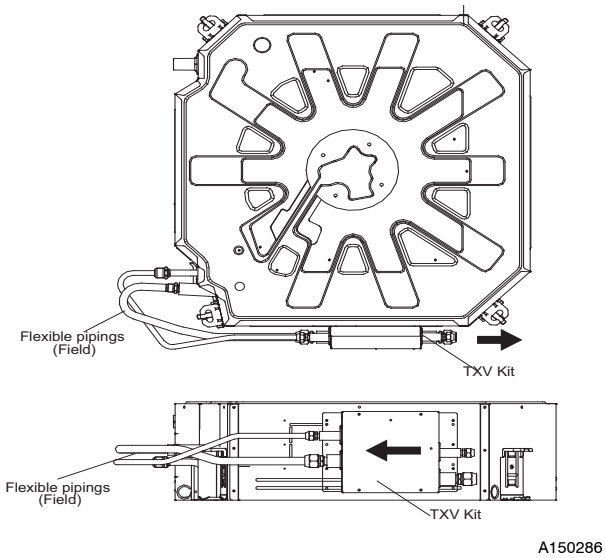

Fig. 3 - TXV Kit (within packaging of indoor unit)

Table 2 – Indoor Units Parts List

Name of Part	Qty.	Usage
Owner's Manual	1	Guide for the homeowner
Warranty card	1	Warranty information
Installation instructions	1	Guide to install the unit
Pipe insulation Material	1	Insulation for refrigerant piping
Clamp filter	2	For conforming to EMC standards on connecting wires
Flexible hose	1	Drains moisture from inside the indoor unit
Pipe clamp	1	Fixes the flexible hose to the indoor unit
Remote Controller	1	Controls the indoor unit
Remote Controller holder	1	Holds the remote controller on the wall
Tapped Screw	2	Used to fix the remote controller holder
Battery	2	Powers the remote controller
Strain relief bracket	1	To affix strain relief to hold wires in place
Screws	4	To affix strain relief bracket

Cassette Cover Panel

A cassette grille/panel is required to complete installation of indoor unit. The indoor unit installation would not be complete without the addition of this grille. Order it and complete installation when you have the grille available. The grille model number is: 40MK-B01C--3.

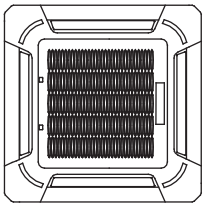

Fig. 4 - Cassette Grille/Panel

Outdoor Unit

The following items are included with the outdoor unit:

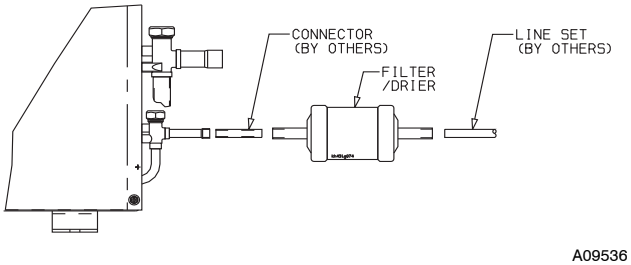

Fig. 5 - 24AHA/124ANS

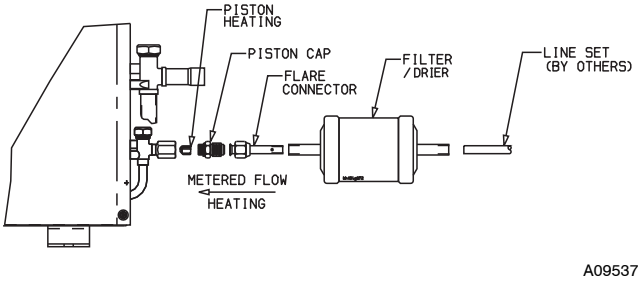

Fig. 6 - 25HHA4/224ANS

Table 3 – Outdoor Unit Parts Checklist

Model	Filter Drier	Piston Cap	Pistons	Flare Connector
24AHA4/124ANS	✓			
25HHA4/224ANS	✓	✓	✓	✓

DIMENSIONS - INDOOR

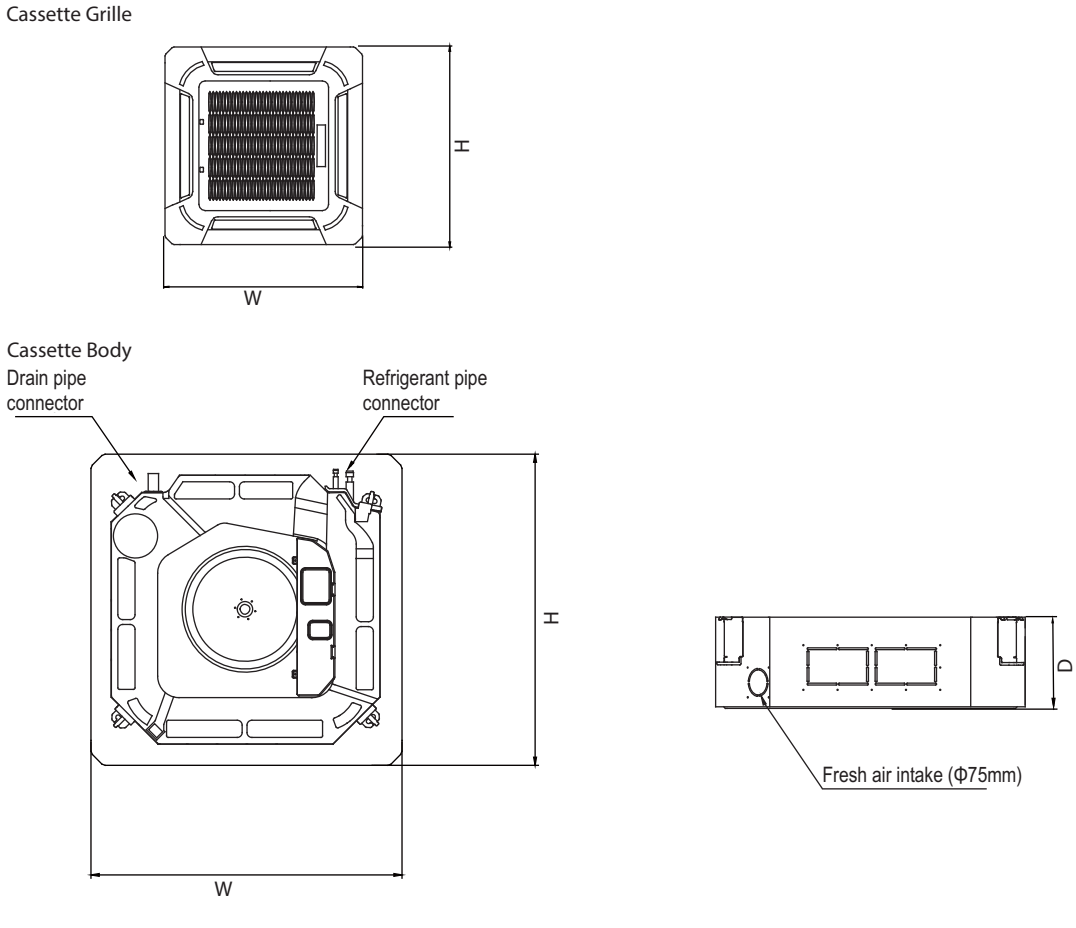

Fig. 7 - 40MKCC, 40MKQ**C Unit and Panel Dimensions**

Table 4 – Dimensions Indoor

Indoor Unit Size BTU/Hr	Height (H) in (mm)	Width (W) in (mm)	Depth (D) in (mm)	Operating Weight lb (kg)
18K	33.1 (840)	33.1 (840)	8.1 (205)	54.0 (24.5)
24K – 34K	33.1 (840)	33.1 (840)	11.3 (287)	68.6 (31.1)
Cassette Panel	37.4 (950)	37.4 (950)	2.2 (55)	11.0 (5)

DIMENSIONS - OUTDOOR

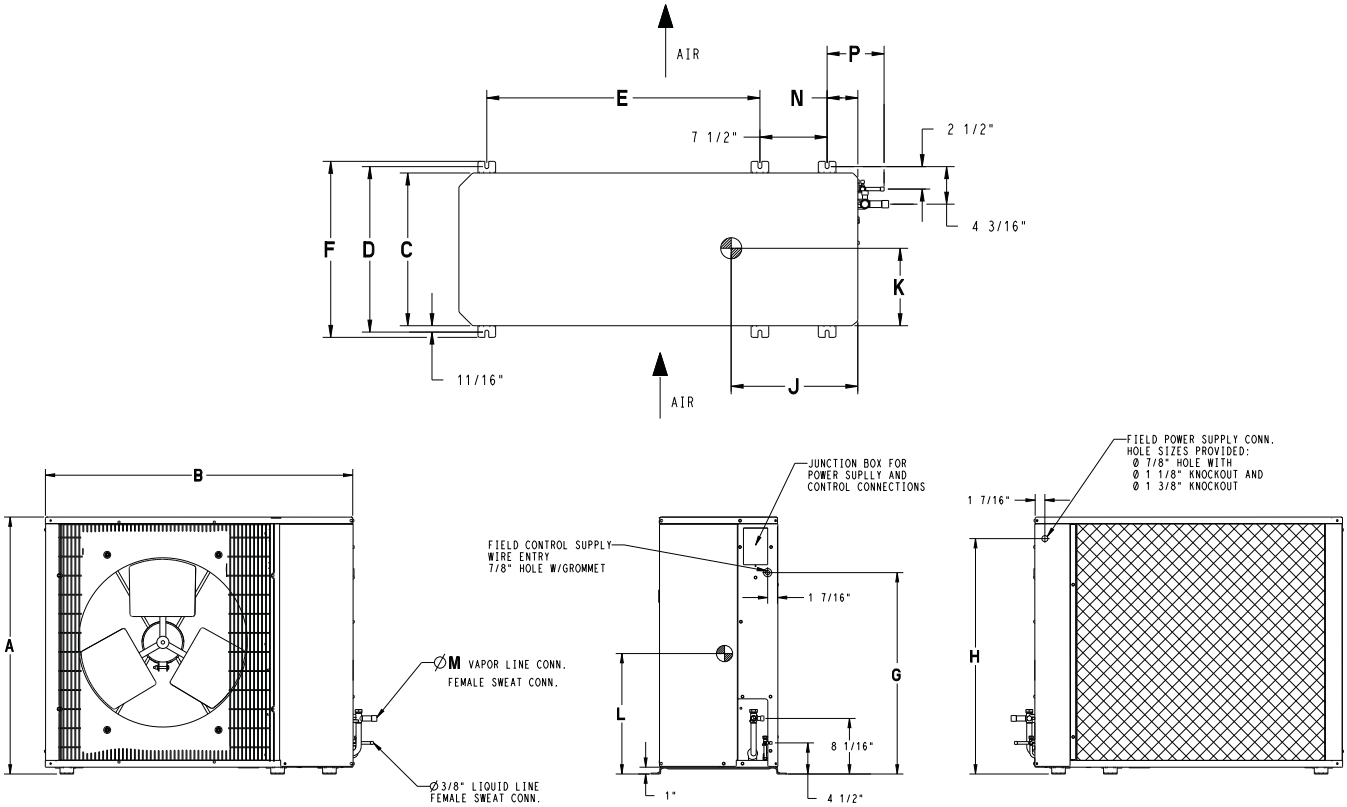

Fig. 8 - Outdoor Unit Dimensions

NOTE:

- Center of Gravity
- All dimensions are in “inches” unless noted.

UNIT SIZE	MINIMUM MOUNTING PAD DIMENSIONS
18,24	23” x 42”
30,36	24” x 50”

Table 6 – Dimensions (ACs)

UNIT	SERIES	ELECTRICAL CHARACTERISTICS				A	B	C	D	E	F	G	H	J	K	L	M	N	P	OPERATING WEIGHT(lbs)	SHIPPING WEIGHT(lbs)	SHIPPING DIMENSIONS (L x W x H)
		208-230-1-60	230-1-60	208/230-3-60	460-3-60																	
124ANS018000 / 24AHA418	0	X	O	O	O	31 1/8"	36 15/16"	14 9/16"	16"	23 7/16"	17 3/16"	23 1/8"	28 1/16"	13"	6 5/8"	11 1/4"	5/8"	2 7/8"	5 13/16"	146	166	42 15/16" X 18" X 34 1/8"
124ANS024000/ 24AHA424	0	X	O	O	O	31 1/8"	36 15/16"	14 9/16"	16"	23 7/16"	17 3/16"	23 1/8"	28 1/16"	14"	6 3/4"	11 5/8"	3/4"	2 7/8"	5 13/16"	148	168	42 15/16" X 18" X 34 1/8"
12ANS030000/ 24AHA430	0	X	O	O	O	37 1/8"	44 1/2"	17 1/16"	18 7/16"	30 1/2"	19 5/8"	29 1/8"	34 1/16"	13 11/16"	8 1/8"	15 7/8"	3/4"	3 3/8"	6 3/8"	183	213	50 1/2" X 20 1/2" X 40 1/8"
124ANS036000/ 24AHA436	0	X	O	X	X	37 1/8"	44 1/2"	17 1/16"	18 7/16"	30 1/2"	19 5/8"	29 1/8"	34 1/16"	13 11/16"	8 1/8"	15 7/8"	7/8"	3 3/8"	6 3/8"	184	214	50 1/2" X 20 1/2" X 40 1/8"

Table 7 – Dimensions SI (ACs)

UNIT	SERIES	ELECTRICAL CHARACTERISTICS				A	B	C	D	E	F	G	H	J	K	L	M	N	P	OPERATING WEIGHT(KG)	SHIPPING WEIGHT(KG)	SHIPPING DIMENSIONS (L x W x H)
		208-230-1-60	230-1-60	208/230-3-60	460-3-60																	
124ANS018000 24AHA418	0	X	O	O	O	790.4	938.0	370.0	406.0	595.5	436.0	587.6	712.2	330.2	168.3	285.8	15.9	73.0	148.2	66.2	75.3	1090.2 X 457.7 X 866.7
124ANS024000 24AHA424	0	X	O	O	O	790.4	938.0	370.0	406.0	595.5	436.0	587.6	712.2	355.6	171.5	295.3	19.1	73.0	148.2	67.1	76.2	1090.2 X 457.7 X 866.7
124ANS030000 24AHA430	0	X	O	O	O	942.8	1130.0	433.0	469.0	774.5	499.0	740.0	864.6	347.7	206.4	403.2	19.1	86.0	161.2	83.0	96.6	1282.7 X 520.7 X 1019.1
124ANS036000 24AHA436	0	X	O	X	X	942.8	1130.0	433.0	469.0	774.5	499.0	740.0	864.6	347.7	206.4	403.2	22.2	86.0	161.2	83.5	97.1	1282.7 X 520.7 X 1019.1

Table 8 – Dimensions (HPs)

UNIT	SERIES	ELECTRICAL CHARACTERISTICS				A	B	C	D	E	F	G	H	J	K	L	M	N	P	OPERATING WEIGHT(lbs)	SHIPPING WEIGHT(lbs)	SHIPPING DIMENSIONS (L x W x H)
		208-230-1-60	230-1-60	208/230-3-60	460-3-60																	
224ANS024000/25HHA424	0	X	O	O	O	31 1/8"	36 15/16"	14 9/16"	16"	23 7/16"	17 3/16"	23 1/8"	28 1/16"	14"	6 3/4"	11 5/8"	3/4"	2 7/8"	4 15/16"	161	181	42 15/16" X 18" X 34 1/8"
224ANS030000/25HHA430	0	X	O	O	O	37 1/8"	44 1/2"	17 1/16"	18 7/16"	30 1/2"	19 5/8"	29 1/8"	34 1/16"	13 11/16"	8 1/8"	15 7/8"	3/4"	3 3/8"	5 1/2"	196	226	50 1/2" X 20 1/2" X 40 1/8"
224ANS036000/24HHAA436	0	X	O	X	X	37 1/8"	44 1/2"	17 1/16"	18 7/16"	30 1/2"	19 5/8"	29 1/8"	34 1/16"	13 11/16"	8 1/8"	15 7/8"	7/8"	3 3/8"	5 1/2"	197	227	50 1/2" X 20 1/2" X 40 1/8"

Table 9 – Dimensions SI (HPs)

UNIT	SERIES	ELECTRICAL CHARACTERISTICS				A	B	C	D	E	F	G	H	J	K	L	M	N	P	OPERATING WEIGHT(KG)	SHIPPING WEIGHT(KG)	SHIPPING DIMENSIONS (L x W x H)
		208-230-1-60	230-1-60	208/230-3-60	460-3-60																	
224ANS024000/ 25HHA424	0	X	O	O	O	790.4	938.0	370.0	406.0	595.5	436.0	587.6	712.2	355.6	171.5	295.3	19.1	73.0	126.2	73.0	82.1	1090.2 X 457.7 X 866.7
224ANS030000/ 25HHA430	0	X	O	O	O	942.8	1130.0	433.0	469.0	774.5	499.0	740.0	864.6	347.7	206.4	403.2	19.1	86.0	139.2	88.9	102.5	1282.7 X 520.7 X 1019.1
224ANS036000/ 25HHA436	0	X	O	X	X	942.8	1130.0	433.0	469.0	774.5	499.0	740.0	864.6	347.7	206.4	403.2	22.2	86.0	139.2	89.4	103.0	1282.7 X 520.7 X 1019.1

CLEARANCES - INDOOR

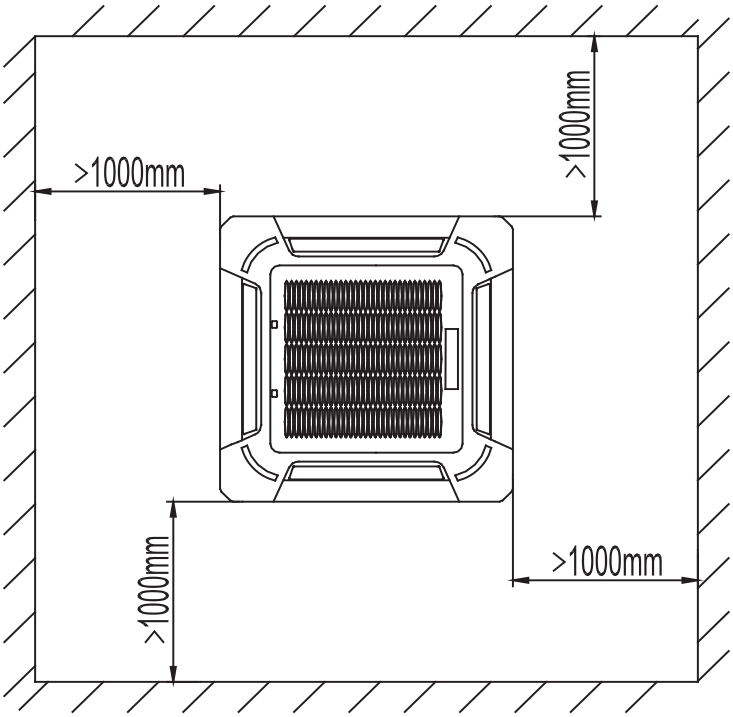

A150152

Fig. 9 - 40MKCB, 40MKQ**B Unit Clearance**

CLEARANCES - OUTDOOR

1. **Single Unit Applications:** With coil facing wall: Allow 6" (152.4mm) minimum clearance on coil side and coil end and 20" (504.0 mm) minimum clearance on fan side. Allow 24" (609.6 mm) minimum clearance on compressor end for service.
2. **With fan facing wall:** Allow 8" (203.2 mm) minimum clearance on fan side and coil end and 20" (504.0 mm) minimum clearance on coil side. Allow 24" (609.6 mm) minimum clearance on compressor end for service when units are stacked or there is less than 40" (1016 mm) of clearance above the unit. If there is 40" (1016 mm) clearance above unit and the top panel is accessible for removal allow 8" (203.2 mm) minimum clearance on compressor end for service.
3. **Multi-unit Applications:** Allow 24" (609.6 mm) minimum clearance between fan and coil sides of multiple units. Arrange units so discharge of one does not enter inlet of another. Allow 24" (609.6 mm) minimum clearance on compressor end when units are stacked or there is less than 40" (1016 mm) of clearance above the unit. If there is 40" (1016 mm) clearance above unit and the top panel is accessible for removal allow 8" (203.2 mm) minimum clearance on compressor end for service. When two units are installed end to end with the coil ends facing each other allow 12" (304.8 mm) minimum clearance between units.

IMPORTANT: When installing multiple units, ensure the discharge air from one unit is not drawn into another unit. When installing single or multiple units in an alcove, roof well, or partially enclosed area, ensure there is adequate ventilation to prevent recirculation of discharge air.

SYSTEM REQUIREMENTS

Clearances

Allow sufficient space around the indoor and outdoor unit for proper airflow circulation and servicing. Refer to Fig.9 and the outdoor unit clearance section for minimum required clearances.

Piping: Piping and insulation is field supplied.

Piping Lengths

The minimum length between the indoor and outdoor units is 10 ft (3 m). Refer to table 9 for the maximum lengths allowed.

Table 9 – Maximum Refrigerant Line Lengths

Unit Size	Max Line Length* ft(m	Max Elevation (ID over OD) ft (m)	Max Elevation (OD over ID) ft (m)
18K-34K	250 (76.2)	65 (19.8)	200 (61)

Note:For lengths greater than 25 ft (7.6 m), refer to the *Residential Long Line Guide*.

Pipe Sizes

In some models, indoor unit and/or outdoor unit pipe sizes may differ from those in TXV connections. Coupling is required in those cases. See Table 10 for complete list of tube sizes to identify coupling needs.

Table 10 – Pipe Sizes

Indoor Unit	Outdoor Unit	Indoor Unit Tube Sizes (in)		TXV Kit Tube Sizes (in)		Outdoor Unit Tube Size (in)	
		Liquid	Vapor	Liquid	Vapor	Liquid	Vapor
40MKCB18C--3	24AHA418 124ANS018	3/8	5/8	3/8	5/8	3/8	5/8
40MKCB34C--3	24AHA424 124ANS024		3/4		3/4		3/4
40MKCB34C--3	24AHA430 124ANS030		3/4		3/4		3/4
40MKCB34C--3	24AHA436 124ANS036		3/4		3/4		7/8
40MKQB34C--3	25HHA424 224ANS024		3/4		3/4		3/4
40MKQB34C--3	25HHA430 224ANS030		3/4		3/4		3/4
40MKQB34C--3	25HHA436 224ANS036		3/4		3/4		7/8

Note:Both lines need to be insulated using at least 1/2 inch closed foam insulation.

Condensate Drain Pipe Sizes

Refer to table 11 for the required sizes.

Table 11 – Drain Pipe Sizes

Indoor Unit Size BTU/Hr	Outside Diameter in (mm)
18K	1 (25.4)
24K – 34K	1 (25.4)

Refrigerant Charge

The outdoor units can be matched with multiple indoor units and thus a different amount of charge might be required when matched with the 40MKCB**C or 40MKQB**C units. Charge to Sub-cooling Delta from Rating Plate Value as stated below.

Table 12 – Charge Requirements

System Type	Nominal Capacity kBTU/Hr	Outdoor Unit		Indoor Unit	Charge to Sub-cooling Delta from Rating Plate Value
Cooling Only	018	24AHA418A003	124ANS018000	40MKCB18C--3	12
	024	24AHA424A003	124ANS024000	40MKCB34C--3	12
	030	24AHA430A003	124ANS030000	40MKCB34C--3	12
	034	24AHA436A003/5/6	124ANS036000	40MKCB34C--3	8
Heat Pump	024	25HHA424A003	224ANS024000	40MKCB34C--3	14
	030	25HHA430A003	224ANS030000	40MKCB34C--3	11
	034	25HHA436A003/5/6	224ANS036000	40MKCB34C--3	14

NOTE: **The above additional charge is required amount for line lengths up to 25 ft. (7.6 m). For line lengths exceeding 25 ft (7.6 m), additional charge will be required. Refer to the *Residential Long Line Guide*.**

Metering Device

The 40MKC(Q)*C unit uses a TXV while the outdoor unit uses a type B accurator. The cooling metering device is installed with the indoor unit. The heating metering device is installed with the outdoor unit. One metering device is required for the cooling only system and two are required for the heat pump systems. Refer to Table 13 for a breakdown of each unit's metering devices.

Table 13 – Metering Devices

System Size kBTU/hr	Cooling Only	Heat Pumps	
	40MKCB**C	40MKQB**C	25HHA4/224ANS
018	TXV	-	-
024	TXV	TXV	0.049"
030	TXV	TXV	0.055"
034	TXV	TXV	0.063"

Power and Connecting Cables - Field Supplied

Recommended Connection Method for Power and Communication Wiring (To minimize communication wiring interference)

Power Wiring:

The main power is supplied to both the indoor and the outdoor units. The field supplied connecting cable consists of three (3) wires. Two wires are high voltage AC power and one is a ground wire.

Consult your local building codes and the NEC (National Electrical Code) or CEC (Canadian Electrical Code) for special requirements.

All wires must be sized per NEC or CEC and local codes. Use Electrical Data table MCA (minimum circuit amps) and MOCP (maximum over current protection) to correctly size the wires and the disconnect fuse or breakers respectively.

Per caution note, only copper conductors with a minimum 300 volt rating and 2/64-inch thick insulation must be used.

Communication Wiring:

A separate shielded Stranded copper conductor only, with a 600 volt rating and double insulated copper wire, must be used as the communication wire from the outdoor unit to the indoor unit. To minimize voltage drop of the communication wire, use the wire size and maximum lengths shown in Table 14.

Table 14 – Maximum Lengths

Wire Size	Length ft. (m)
18AWG	50 ft. (15 m)
16AWG	50 ft. (15 m) to 100 ft. (30 m)
13AWG	100 ft. (30 m) to 200 ft. (60 m)

⚠ CAUTION

EQUIPMENT DAMAGE HAZARD

Failure to follow the following caution may result in equipment damage or improper operation.

Wires should be sized based on NEC and local codes. Use copper conductors only with a 600 volt rating and double insulated copper wire.

User Interface

The indoor unit is supplied with a wireless remote control to operate the unit (an Owner's Manual is supplied with the unit). The following accessories are available.

- Wall mounted control.

Operating Range

Ensure that the system operates within the application guidelines shown in the following tables.

Table 15 – Cooling Operating Range

	Maximum		Minimum	
	DB °F (°C)	WB °F (°C)	DB °F (°C)	WB °F (°C)
Outdoor Unit	125 (51.7)	-	55 (12.8)	-
Indoor Unit	90 (32)	-	64 (18)	-

Table 16 – Heating Operating Range

	Maximum		Minimum	
	DB °F (°C)	WB °F (°C)	DB °F (°C)	WB °F (°C)
Outdoor Unit	75 (23.9)	67 (19.4)	17 (-8.3)	-
Indoor Unit	80(27)		32 (0)	-

Accessories

An extensive list of field installed accessories is available for both indoor and outdoor units. Identify what accessories, if any, are required for the application at hand and consult the separate installation instructions for the accessories. Some of the accessories, especially on the indoor units, can be installed much easier if planned ahead.

INSTALLATION

Complete Pre-installation Checks

1. **Unpack Unit** – Store the indoor and outdoor units in the original packaging until it is moved to the final site for installation. When unpacking indoor unit, be careful not to lift unit by condensate drain discharge pipe or by refrigerant connections.
2. **Inspect Shipment** – Upon receipt of shipment, check the indoor and outdoor units for damage. If there is any damage, forward claim papers directly to the transportation company. Manufacturer is not responsible for damage incurred in transit.
3. **Inspect Parts Supplied With Units** – Check all items against parts list (see the PARTS LIST section). If any items are missing, notify your distributor or manufacturer office. To prevent loss or damage, leave all parts in original packages until installation.

Consider System Requirements

1. Consult local building codes and NEC for special installation requirements.
2. When deciding the location of the indoor and outdoor units, ensure that the piping run does not exceed the allowed distances listed in Table 9.
3. Make sure the indoor and outdoor units are easily accessible to electrical power.
4. Allow sufficient clearances for airflow, wiring, refrigerant piping, and servicing the unit (see the ”CLEARANCES – INDOOR” and “CLEARANCES – OUTDOOR” sections).
5. Condensate piping can be directed through the inside wall to an approved drain or straight outside.

INSTALL INDOOR UNIT

Plan the installation carefully before you begin.

1. Select indoor unit location.
   a. Where it is out of direct sunlight.
   b. Where the airflow is not blocked.
   c. Where an optimum air distribution is ensured.
   d. Where the condensate can drain correctly and safely.
   e. A ceiling that prevents vibration and is strong enough to hold the product weight.
   f. Maintain sufficient clearance around the indoor unit for maintenance and servicing. Refer to the clearances section of this document.
   g. Where the air filter can be removed and cleaned easily.
   h. Where the piping between the indoor and outdoor units is within the allowable limits.
   i. Install the indoor unit 1m or more away from the TV or radio to prevent the screen from being distorted or noise from being generated.
   j. Install the indoor unit as far away as possible from fluorescent and incandescent lights so that the remote control can be operated well.
   k. Do not install units too close to humid conditions.
2. TXV Installation
   a. Location – The TXV kit can be affixed directly to the indoor unit or anywhere between 12 to 18 inches from the indoor unit pipe connection.

⚠ CAUTION

Failure to follow the following caution may result in equipment damage or improper operation.

The TXV kit needs to be installation at most 12 to 18 inches from the indoor unit pipe connection.

   b. The TXV contains a label specifying the allowed flow direction. See below for allowed and not allowed flow directions.

⚠ CAUTION

Failure to follow the following caution may result in equipment damage or improper operation. One of the two arrows on the TXV part number label must point up when installed.
Install unit such that the refrigerant flow directions is in any of the two allowed directions.

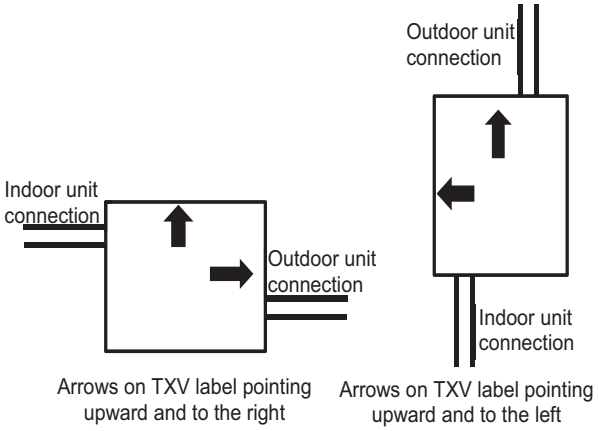

Fig. 10 – Allowed TXV installation direction per label attached to TXV

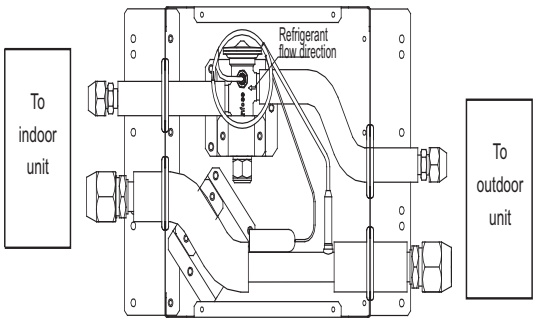

Fig. 11 – TXV Flow Direction

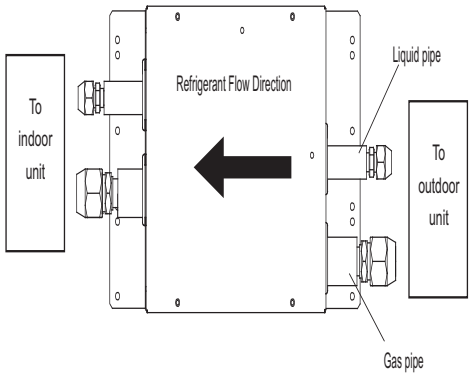

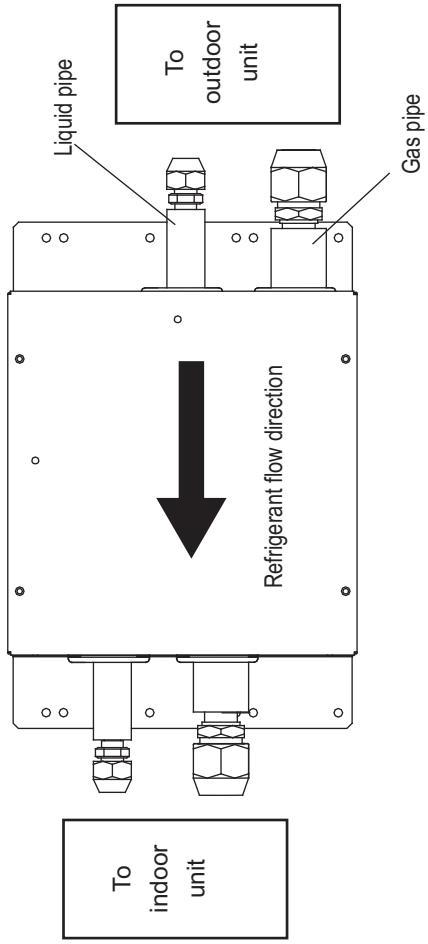

Fig. 12 - Allowed Refrigerant Flow Direction

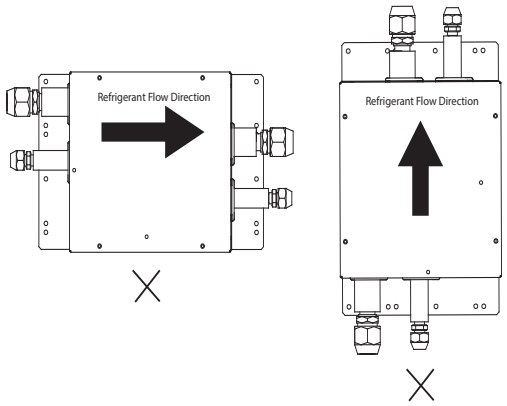

Fig. 13 - Refrigerant Flow Direction Not Allowed

c. Once location and flow direction is identified, connect piping between indoor unit and TXV kit. Flexible piping is recommended.

⚠ CAUTION

Failure to follow the following caution may result in equipment damage or improper operation.
Insulate liquid and vapor pipes connecting to indoor and outdoor units.

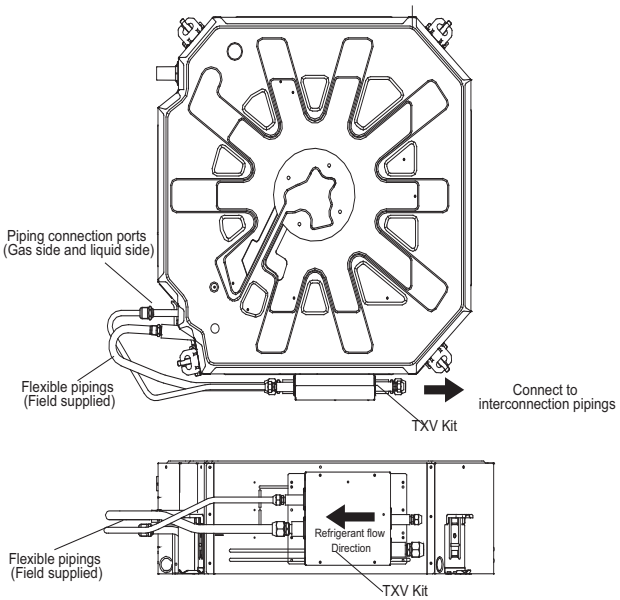

Fig. 14 - TXV Attached to Cassette Body

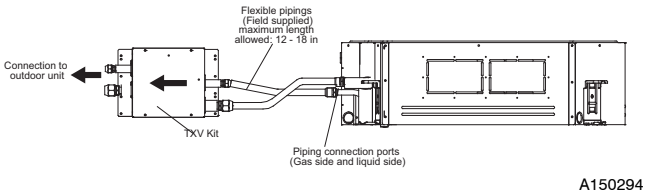

Fig. 15 - TXV Kit not Attached to Cassette Body

3. Install Suspension Bolts
   a. Mark the spots on the ceiling where you want to install the indoor unit.
   b. Drill holes at the marking spots and then insert bolt anchors. Use existing ceiling supports or construct a suitable support. Use a hole-in-anchor, sunken insert for existing ceilings.
   c. Depending on the type of ceiling, fix the threaded hangers as shown in Fig. 16 and Fig. 17.
   d. Insert the washers as shown in Fig. 16 and Fig. 17.
   e. Remove the "T" bar in ceiling to facilitate installation. See Fig. 17. If the "T" bar cannot be removed from the ceiling, the unit may have to be tilted as shown in Fig. 18.

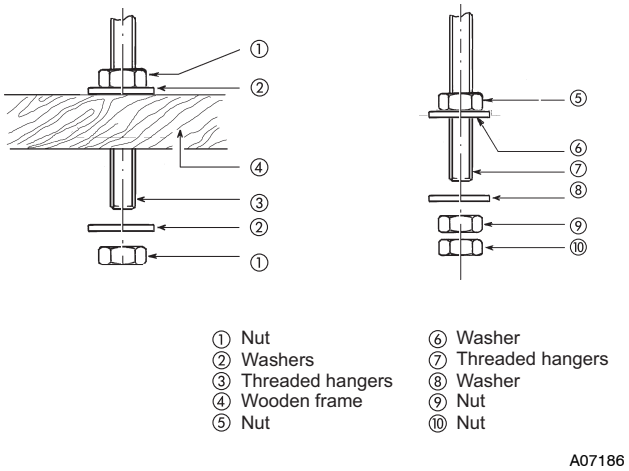

Fig. 16 - Attach Hangers to Ceiling

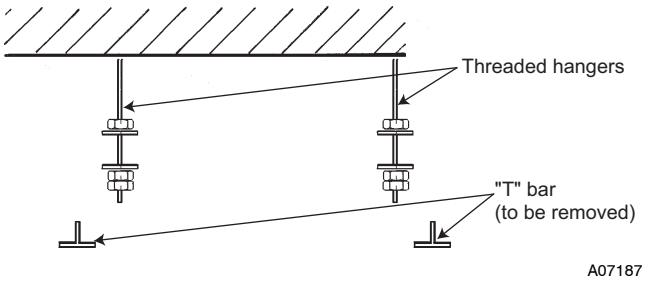

Fig. 17 - Threaded Hangers and "T"Bar

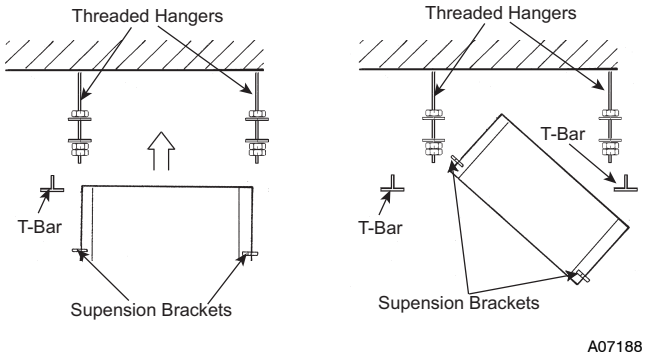

Fig. 18 - Positioning Unit in Ceiling

4. Hanging the Indoor Unit:
   a. Screw double nuts to each suspension bolts making space for hanging the indoor unit
   b. Use a stacker to lift the unit to the installation site.

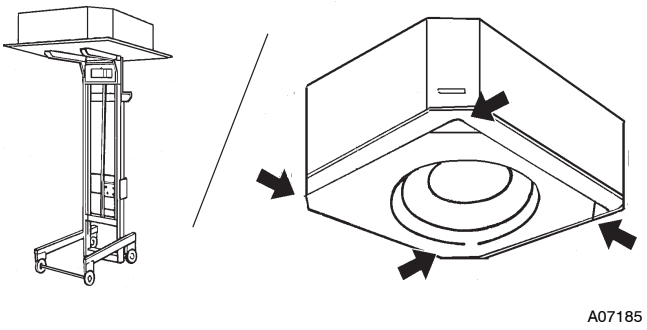

Fig. 19 - Positioning Unit

   c. Hang the indoor unit to the suspension bolts between two nuts.
   d. Screw the nuts to suspend the unit. Check the lower side of indoor unit locates at position (10 to 12 mm) higher than the lower surface of the ceiling. L is about half of the screw length of the installation hook.
   e. Adjust level of the unit by using level vial to make sure the horizontal level of the main body is within ±1°.

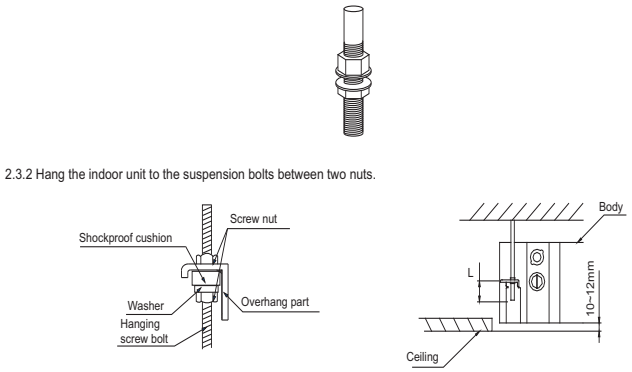

Fig. 20 - Suspension Bolt Details

5. Install the Drain Pipe

The cassette unit is equipped with a condensate pump. Use the following steps to install the drain piping.

   a. Remove the cover of the drain hose connection port.
   b. Insert the flexible hose onto the drain hose port. Securely fix the flexible hose to the indoor unit with a pipe clamp.
   c. Install the flexible hose onto the PVC water pipe (field supplied, O.D. 1") with PVC adhesive.

NOTES:

The drain pipe should be install within 200mm from the flexible hose connection at the indoor unit.

To ensure correct condensate water flow, the pipe should have a gradient of 2% without obstruction. see figure 21.

   d. Make a trap of at least 2 in. (51 mm) in depth to prevent unpleasant odors from reaching the room.
   e. Insulate condensate pipe with condensation proof material such as polyurethane, propylene, or neoprene of 3/16 in. to 3/8 in. thickness.

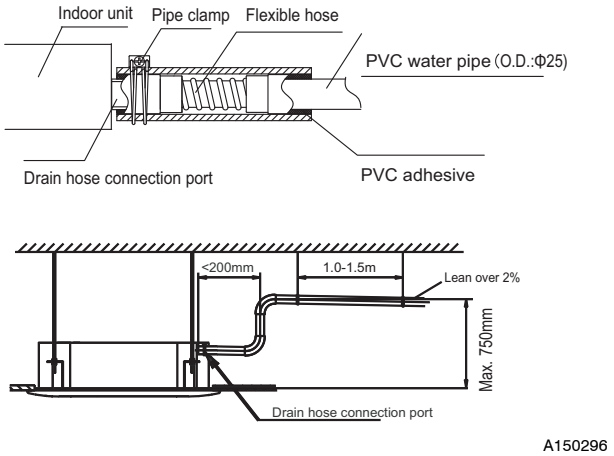

Fig. 21 - Drain Pipe Connection

   f. Drill a 2-3/4 in. (70 mm) hole in the wall with a 3/16 in. to 3/8 in. (4.8 - 9.5 mm) slope toward the outside (see Fig. 22). This hole will be used for the piping (refrigerant and condensate) and control wiring

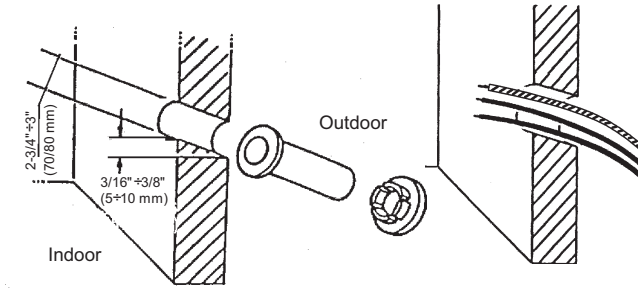

Fig. 22 - Drilling for Connections

6. Install the panel:
   a. Push the two grille switches simultaneously, then lift the grille up and remove the air inlet grille. Take out the covers from the 4 corners (see Fig. 23).

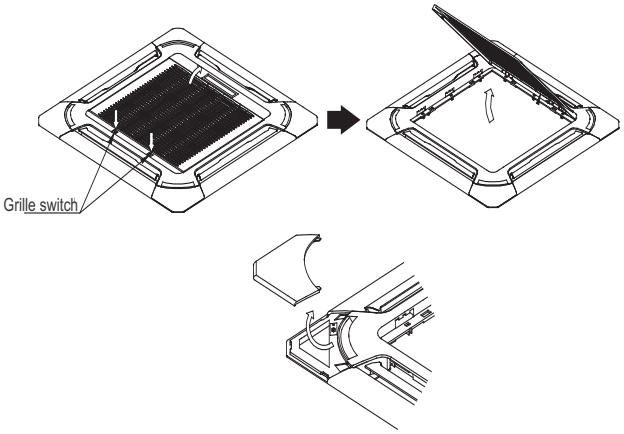

Fig. 23 - Inlet Grille Removal

   b. Align the corner marked with the piping and drain side with the piping and drainage interfaces of the main body.
   c. Hang the panel to the hooks on the main body.
   d. Tighten the screw evenly under the panel hook until the thickness of the sponge between the main body and panel is reduced to about 4~6mm. The edge of the panel should contact the ceiling well.
   e. Connect the swing motor connector to the corresponding plug on the main body.

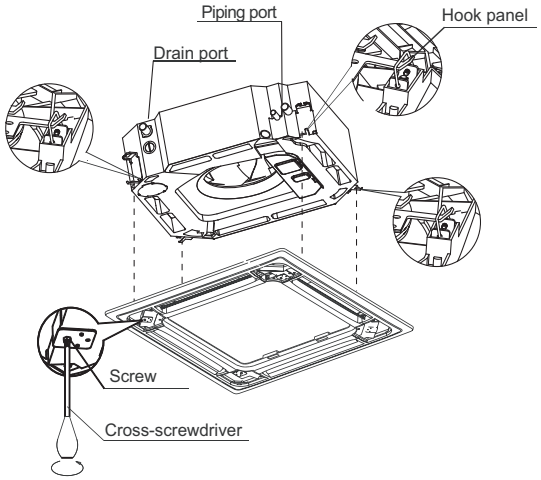

Fig. 24 - Installing the Cassette Panel

   f. Hang the hook behind the air inlet grille on to the panel.
   g. Connect the display connector to the corresponding plug on the main body (see Fig. 25).
   h. Close the air inlet grille.
   i. Press the installation cover gently into the panel.

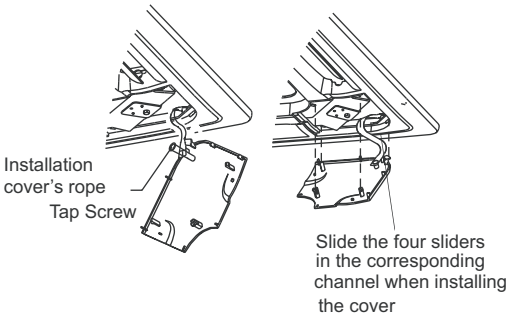

Fig. 25 - Display Wire Connection

INSTALL OUTDOOR UNIT

The outdoor units can be installed on the ground, on the roof, or mounted on a wall.

NOTE: **Install the unit so that the coil does not face into prevailing winds. If this is not possible and constant winds above 25 mph are expected, use the accessory wind baffle. See the installation instructions provided with the accessory kit. Wind baffles should also be used on all units with accessory low ambient temperature control.**

Mounting on Ground

1. Mount unit on a solid level concrete pad.
2. If a heat pump is being installed, use a field- provided snow stand or ice rack where prolonged subfreezing temperatures or heavy snow occurs.
3. Position unit so water or ice from roof does not fall directly onto unit.
4. On cooling only units, an accessory stacking kit can be used when units are to be stacked. See installation instructions provided with the accessory kit.

Mounting on Roof

IMPORTANT: Mount unit on a level platform or frame at least 6 in. (152.4 mm) above roof surface. Isolate unit and tubing from structure.

⚠ CAUTION

PERSONAL INJURY AND/OR EQUIPMENT DAMAGE HAZARD

Failure to follow this caution may result in personal injury and/or equipment damage.
Be sure unit panels are securely in place prior to rigging.

1. Rig the unit. Keep the unit upright and lift using a sling. Use cardboard or padding under the sling, and spreader bars to prevent sling damage to the unit. See Fig. 26 for center of gravity reference
2. Mount unit on a solid concrete pad or platform.
3. Isolate unit and piping from structure
4. If a heat pump is being installed, use a field- provided snow stand or ice rack where prolonged subfreezing temperatures or heavy snow occurs.
5. On cooling only units, an accessory stacking kit can be used when units are to be stacked. See installation instructions provided with accessory kit.

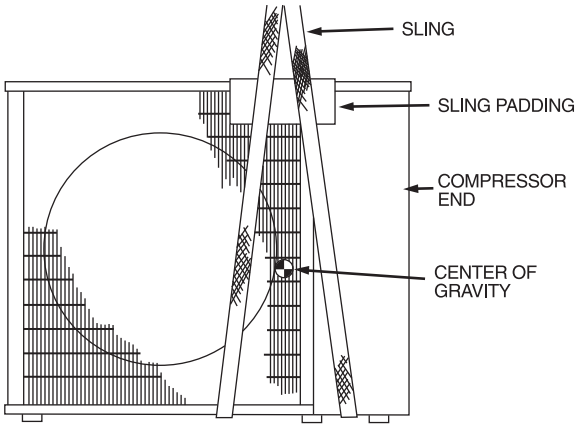

A07396

Fig. 26 - Lifting Unit with Sling

Mounting Unit on Wall

The units can also be mounted on the wall using the accessory mounting kit.

Complete Outdoor Refrigerant Connections

Follow the following general guidelines:

1. Use refrigerant grade field – supplied tubing. Refer to Table 10 for the correct line sizes.
2. Do not use less than 10 ft (93.05 m) of interconnecting tubing.

⚠ CAUTION

UNIT DAMAGE HAZARD

Failure to follow this caution may result in equipment damage or improper operation.

If any section of pipe is buried, there must be a 6 in. (152.4 mm) vertical rise to the valve connections on the outdoor unit. If more than the recommended length is buried, refrigerant may migrate to cooler, buried section during extended periods of system shutdown. This causes refrigerant slugging and could possibly damage the compressor at start-up.

When more than 80 ft (24.4 m) of interconnecting tubing is used, consult the Residential Long Line Application Guide for required accessories.

3. Insulate both lines. A minimum of 1/2 inch foam pipe insulation is recommended.
4. Run the refrigerant tubes as directly as possible and avoid unnecessary turns and bends.
5. Suspend refrigerant tubes to avoid damage to insulation or tubes so they do not transmit vibration to the structure.
6. When passing refrigerant tubes through the wall, seal the opening so rain and insects do not enter the structure. Leave some slack in refrigerant tubes between structure and outdoor unit to absorb vibration.

Connection at Outdoor Unit

⚠ CAUTION

UNIT DAMAGE HAZARD

Failure to follow this caution may result in equipment damage or improper operation.

To prevent damage to unit or service valves observe the following:

- A brazing shield **MUST** be used.
- Wrap service valves with wet cloth or use a heat sink material.

24AHA4/124ANS Units:

1. Assemble the connector tube to the factory supplied filter drier by:
   a. Braze the field supplied connector to the inlet of the filter drier (see Fig. 27).

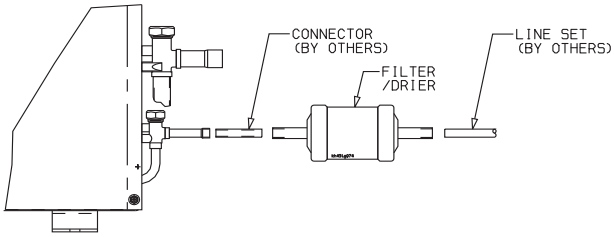

A09536

Fig. 27 - Cooling Only Connector Tube Assembly

2. Braze the completed filter drier assembly to the liquid service valve.
3. Connect the field supplied line set to the filter drier assembly and the suction valve. A sweat connection is required at the suction valve and flare connection is required for the mixed phase line.
4. Insulate any exposed areas between the line set and the liquid valve.

25HHA4/224ANS Units

1. Assemble the connector tubes to the factory supplied filter drier by brazing the factory supplied flare connectors to the inlet and outlet for the filter drier (see Fig. 28).

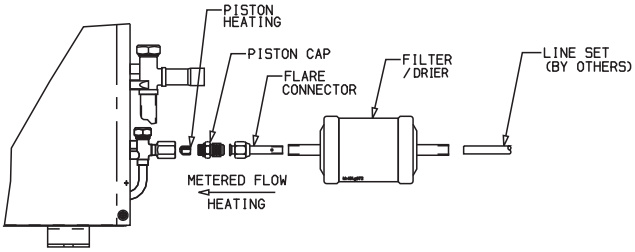

A09537

Fig. 28 - Heat Pump Connector Tube Assembly

2. Remove the plastic cap from the liquid and suction service valve on the heat pump outdoor unit and assemble the heating piston and piston cap supplied with the outdoor unit as shown in Fig. 29.

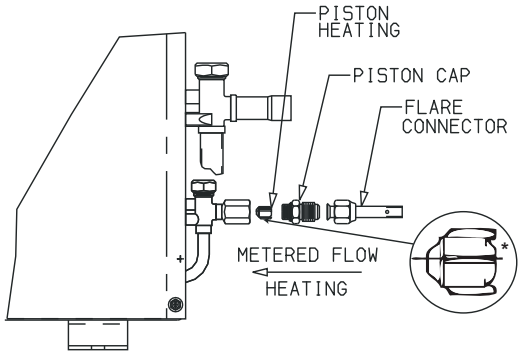

Fig. 29 - Accurator (bypass type) Metering Device Components

NOTE: **The Teflon seal on the piston should point towards the liquid service valve. The size of the factory supplied piston might have to be adjusted for long line applications (over 80 ft /24.4 m). Refer to the Residential Long Line Application Guide for additional information.**

3. Attach the flare end of the filter drier assembly to the piston cap (see Fig. 28).
4. Connect the field supplied line set to the filter drier assembly and to the suction valve.
5. Insulate any exposed areas between filter drier and liquid valve.

Complete Outdoor Power and Control Wiring

⚠ WARNING

Failure to follow this warning could result in personal injury or death.

The unit cabinet must have an uninterrupted or unbroken ground to minimize personal injury if an electrical fault should occur. The ground may consist of electrical wire or metal conduit when installed in accordance with existing electrical codes.

⚠ CAUTION

UNIT DAMAGE HAZARD

Failure to follow this caution may result in equipment damage or improper operation.

Unit failure as a result of operation on improper line voltage or excessive phase imbalance constitutes abuse and may cause damage to electrical components. Such operation could void any applicable manufacturer warranty.

⚠ WARNING

ELECTRICAL SHOCK HAZARD

Failure to follow this warning could result in personal injury or death.

Before performing service or maintenance, be sure indoor unit main power switch is turned OFF and indoor blower has stopped.

Lock out and tag switch with a suitable warning label.

Power Wiring

NOTE: The indoor and outdoor units are powered separately.

1. Mount indoor and outdoor power disconnect. The units are factory wired for the voltage shown on the unit nameplates. The fused disconnect switch must be provided within sight of the unit, readily accessible, but out of reach of children. Provisions for locking the disconnect switch on the OFF (open) position is advisable. The disconnect switch must comply with NEC and local codes. Protect the unit and wiring using only the recommended fuse/circuit breaker size (see Tables 17 thru 20).
2. Run power wiring from electric panel to disconnect per NEC and local codes.
3. Run power wiring from the disconnect switch to indoor and outdoor units. Use only minimum 75°C copper conductors between the disconnect switch and the unit for field power connection.
4. Route the field power wires through the conduit connection opening in the unit side panel and connect in junction box as shown in Fig 30 for outdoor units and the strain relief bracket section for indoor units. The units and power wiring must be grounded.

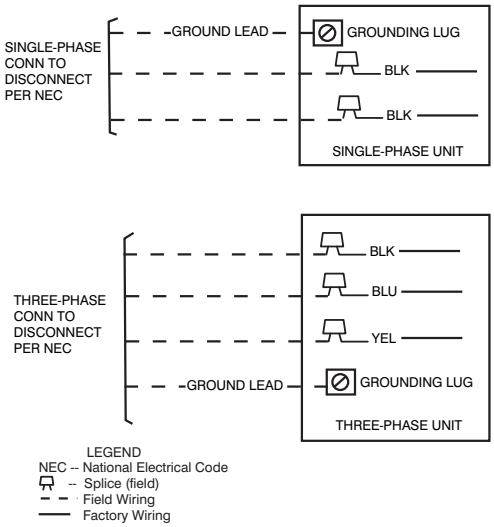

Fig. 30 - Line Power Connections

NOTE: **Operating unit on improper line voltage constitutes abuse and may affect the manufacturer's warranty. DO NOT install unit in a system where voltage may fluctuate above or below permissible limits.**

Control Wiring

Thermostat wires should be used for control wiring between the indoor and outdoor units. A two conductor cable is required for the cooling only units and a four conductor cable is required for heat pumps. 18 AWG is recommended for lengths up to 50 ft. (15 m.), and 16 AWG is recommended between lengths of 50 ft. (15 m.) to 100 ft. (30 m.).

The control circuit is 24 volts AC (minimum 40VA) supplied from the indoor unit.

1. Make sure you have enough control wires to cover the distance between the indoor and outdoor unit.
2. Route one end of the control wiring through the opening provided in the unit side panel and connect to the control terminal strip using either Fig. 31 for AC units or Fig. 32 for Heat Pump Units.

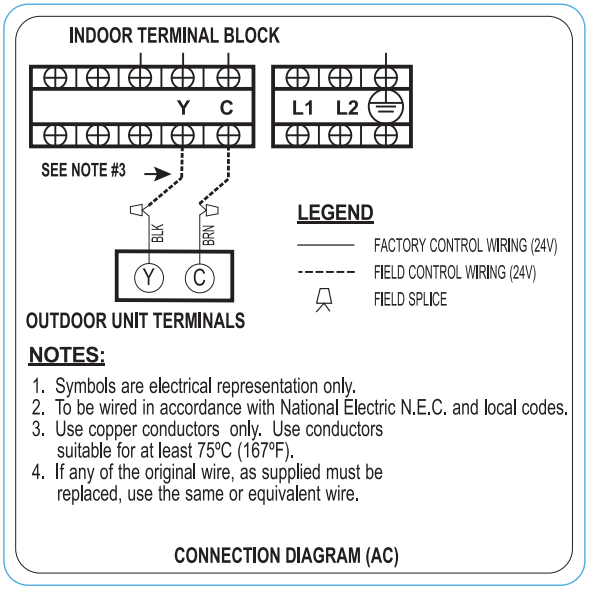

A150280

Fig. 31 - 40MKCBC/24AHA4 or 124ANS Connecting Diagram**

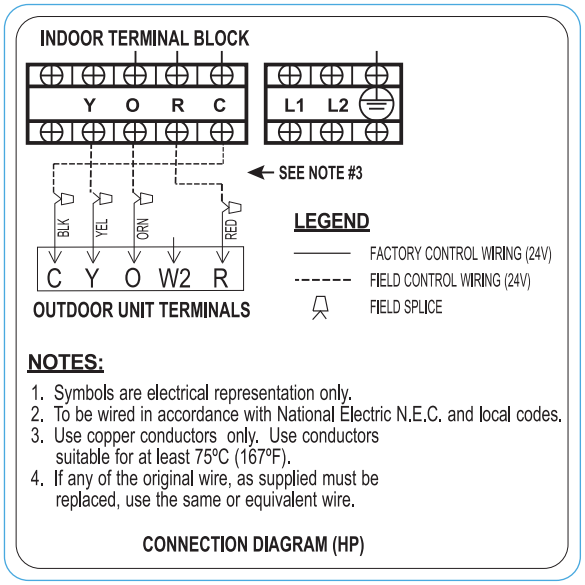

A150282

Fig. 32 - 40MKQBC/25HHA4 or 224ANS Connecting Diagram**

Strain Relief Bracket for Indoor Units

A strain relief is included within the indoor unit's packaging. This is required to be installed. The strain relief bracket and location to where this should be affixed on the unit's body is shown in Fig 33 and 34.

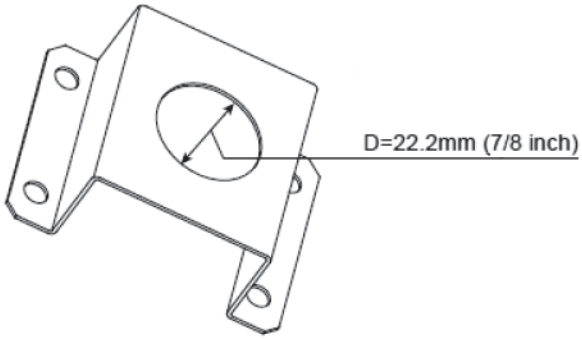

A150303

Fig. 33 - Strain Relief Bracket

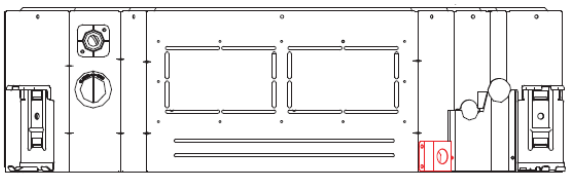

A150304

Fig. 34 - Strain Relief Bracket Affixed to Cassette Body

ELECTRICAL DATA

Table 17 – 24AHA4/124ANS Electrical Data

Unit Size - voltage series	V/PH	OPER VOLTS*		COMPR		FAN	MCA	MAX FUSE** or CKT BRK AMPS
		MAX	MIN	LRA	RLA	FLA		
18-30	208/230/1	253	197	56.3	9.0	0.50	11.8	20
24-30				62.9	10.9	0.50	14.1	25
30-30				73.0	14.1	0.70	18.3	30
36-30				77.0	14.1	1.20	18.8	30
36-50	208/230/1	253	197	71.0	9.0	1.20	12.5	20
36-60	460/3	506	414	38.0	5.6	0.60	7.6	15

Table 18 – 25HHA4/224ANS Electrical Data

Unit Size Voltage Series	V/PH	OPER VOLTS		COMP		FAN	MCA	MAX FUSE** or CKT BRK AMPS
		MAX	MIN	LRA	RLA	FLA		
24-30	208/230/1	253	197	58.3	12.8	0.50	16.5	25
30-30				64.0	12.8	1.20	17.2	30
36-30				77.0	14.2	1.20	19.0	30
36-50	208/230/3	253	197	71.0	9.3	1.20	12.8	20
36-60	460/3	506	414	38.0	5.6	0.60	7.6	15

Table 19 – 40MKCB**C Electrical Data

Indoor Unit Size BTU/Hr	V-Ph-Hz	Voltage Range		Fan	Power	
		Min (V)	Max (V)	FLA (A)	Min Ckt Amp (A)	Max Fuse CB Amp (A)
18K	208–230 - 1 - 60	187	253	0.332	1	15
24K – 34K	208–230 - 1 - 60	187	253	0.8	1	15

Table 20 – 40MKQB**C Electrical Data

Indoor Unit Size BTU/Hr	V-Ph-Hz	Voltage Range		Fan	Power	
		Min (V)	Max (V)	FLA (A)	Min Ckt Amp (A)	Max Fuse CB Amp (A)
24K – 34K	208–230 - 1 - 60	187	253	0.8	1	15

LEGEND
FLA – Full Load Amps
HACR– Heating, Air Conditioning, Refrigeration
LRA– Locked Rotor Amps
NEC– National Electrical Code
RLA– Rated Load Amps (compressor)
*Permissible limits of the voltage range at which the unit will operate satisfactorily
****Time–Delay fuse.**
Complies with 2007 requirements of ASHRAE Standards 90.1

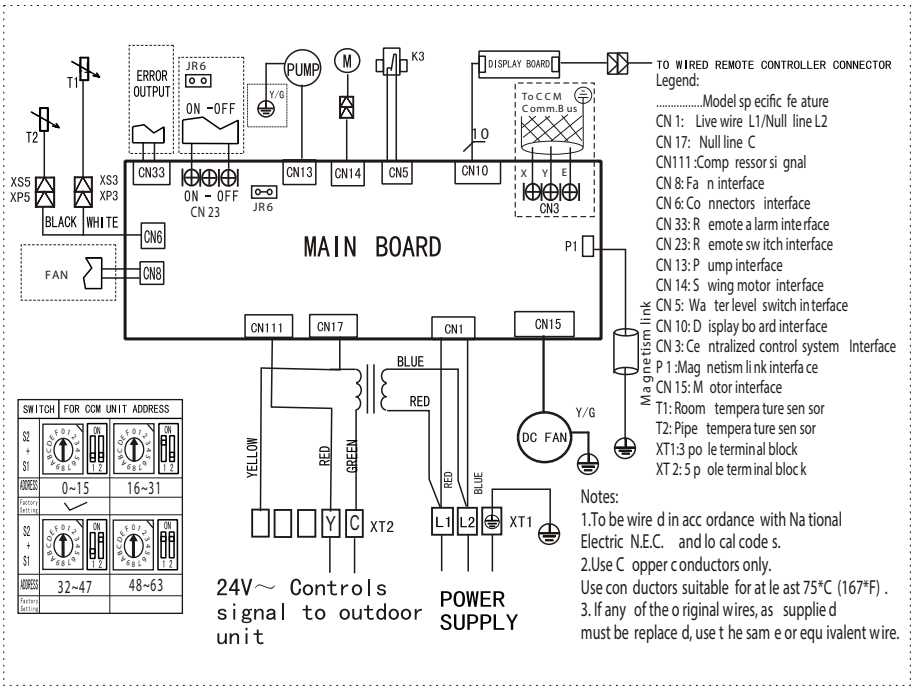

Fig. 35 - 40MKCBC wiring diagram**

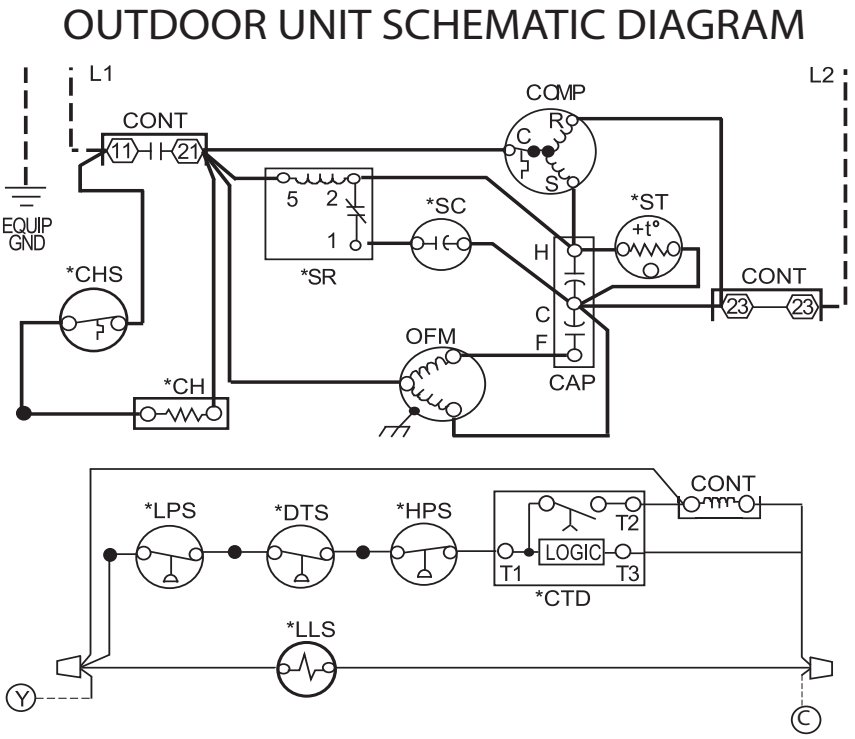

Fig. 36 - 24AHA4/124ANS Wiring Diagram

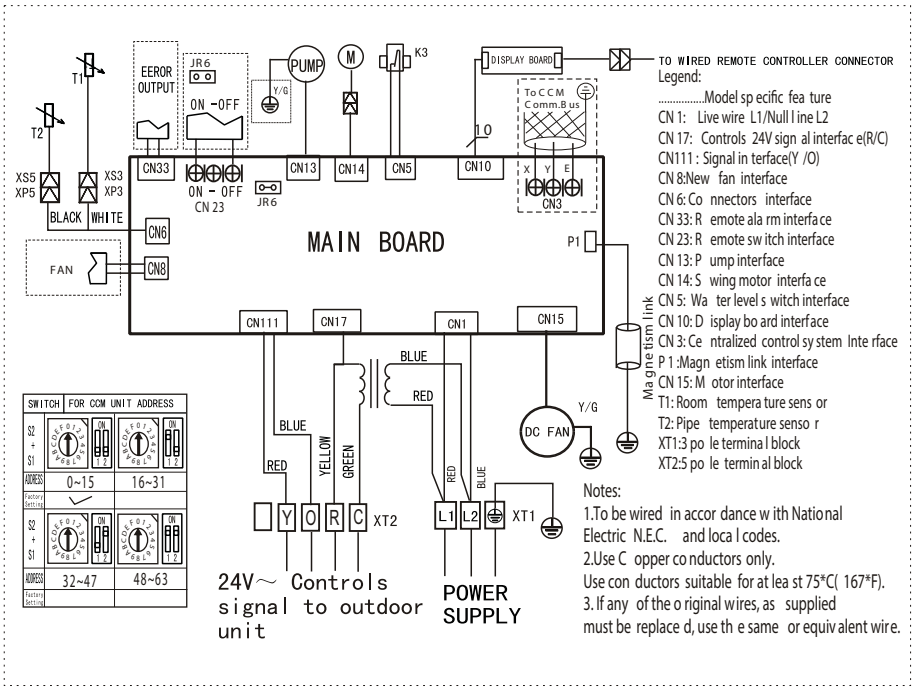

Fig. 37 - 40MKQBC wiring diagram**

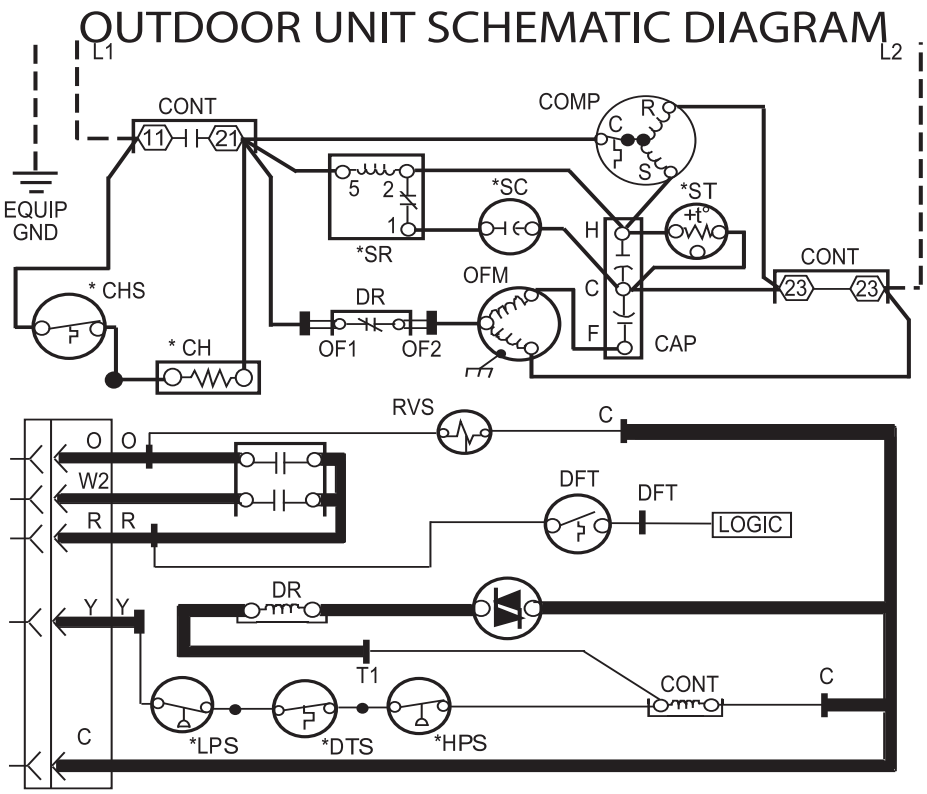

Fig. 38 - 25HHA4/224ANS Wiring Diagram

Run Power Wiring for Indoor Unit

Be sure field wiring complies with local building codes and NEC, and unit voltage is within limits shown in Tables 17 through 20.

Contact the local power company for correction of improper line voltage.

⚠ WARNING

ELECTRICAL SHOCK HAZARD

Failure to follow this warning could result in personal injury or death.

Before installing, modifying, or servicing system, main electrical disconnect switch must be in the OFF position. There may be more than 1 disconnect switch. Lock out and tag switch with a suitable warning label.

⚠ CAUTION

UNIT DAMAGE HAZARD

Failure to follow this caution may result in equipment damage or improper operation.

Unit failure as a result of operation on improper line voltage or excessive phase imbalance constitutes abuse and may cause damage to electrical components. Such operation could void any applicable manufacturer warranty.

NOTE: **Use copper wire only between disconnect switch(es) and unit.**

NOTE: **Install a branch circuit disconnect of adequate size to handle the unit starting current per NEC. Locate the disconnect within sight of, and readily accessible to the unit, per section 440-14 of NEC. Some codes allow the indoor unit to share a disconnect with the outdoor unit if the disconnect can be locked; check local codes before installing in this manner.**

The 40MKCB**C and 40MKQB**C units require their own power supply.

1. Locate the indoor power supply.
2. Locate and install disconnect switch per NEC and local codes.
3. Run power supply wiring to disconnect switch.
4. Run power wiring from disconnect switch to the cassette control box. Use copper wire only.
5. If any accessories are being installed, refer to the individual accessory instructions for guidance on wire routing at this time.

Install All Power, Interconnecting Wiring, Piping and Drain Hose to Indoor Unit

1. Run the control wiring from the outdoor unit through the access hole in the wall and make sure you have enough wire to reach the control box of the unit once hung from the suspension bolts.
2. Complete all refrigerant piping connections.
   a. Cut the extreme end of the tubes and remove any copper shavings with a deburring blade.
   b. Remove the flare nut from the “Flare” connection body of the indoor unit and insert them into the pipes.
   c. Make the flares to the pipe ends with the proper flaring tool. The flare end must not have any burrs or imperfections. The flared walls must be uniform (see Fig. 39 and Fig. 40).

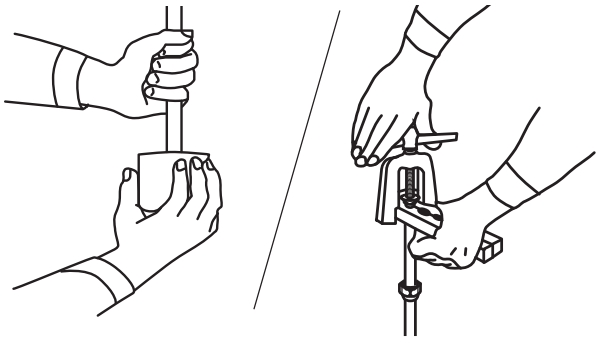

A01799

Fig. 39 - Removing Burrs

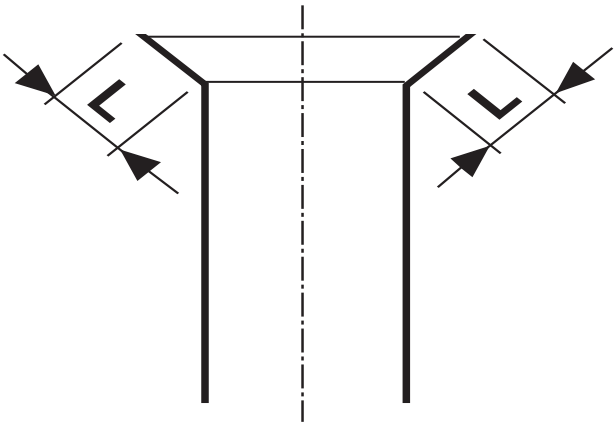

A07200

Fig. 40 - Flared Walls as Equal

3. It is recommended that flare connections be located on the outside of the wall where the indoor unit is to be mounted. If an extension pipe is required to facilitate this location, measure, fabricate and install the extension pipes to the indoor unit before hanging the unit.
4. If piping connections are on the outside wall, pass the pipes (refrigerant and drain) through the wall sleeve. Support the unit away from the bottom using a tool or a piece of wood.

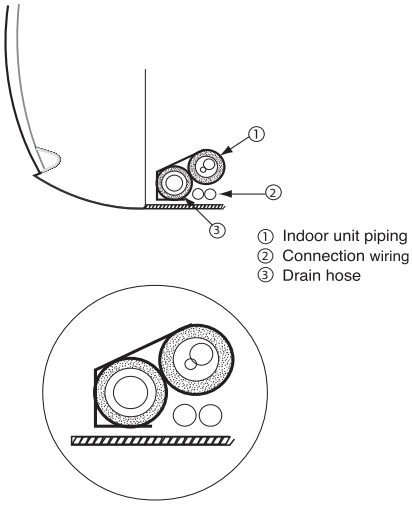

A08364

Fig. 41 - Location of Piping, Hose, and Wiring

5. Route the power and control wiring through the back side of the unit and to the control box area. If the wired remote is to be used, perform any modifications required at this time. Refer to the Accessory installation instructions.

6. Remove the control box cover and finish all indoor unit wiring connections as shown on the wiring diagram or in the accessory installation instructions. Replace the control box cover.
7. Lubricate the end of the pipe and thread of the flare connection with refrigerant oil. Tighten by hand and then use two wrenches (see Fig. 42) to tighten all connections.

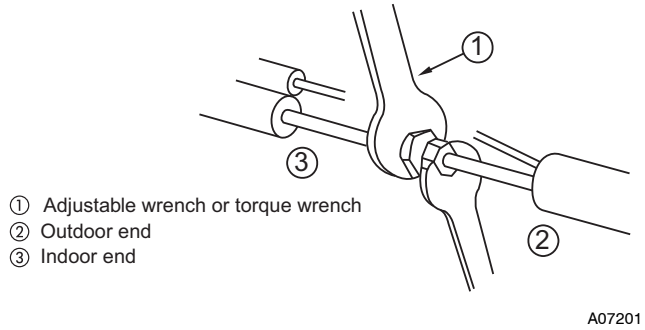

Fig. 42 - Tightening Connections

START-UP

Preliminary Checks

1. Check condensate drainage system; on the opposite side of the drain connection, insert a water bottle up into the fan coil unit and fill the drain pan. Water must flow steadily; if not, check the pipe slope or inspect for any pipe restrictions.
2. Make sure all wiring connections are correct and they are tight.
3. Field electrical power source must agree with unit name plate rating.
4. Check that all barriers, covers, and panels are in place. Ensure that the filters and return-air grilles on the indoor unit have been installed and that the discharge louvers are positioned correctly.
5. All service valves must be closed.
6. On units with crankcase heaters, ensure belly-band heaters are tight around the compressor.

Evacuate and Dehydrate the System

⚠ CAUTION

UNIT DAMAGE HAZARD

Failure to follow this caution may result in equipment damage or improper operation.

Never use the system compressor as a vacuum pump.

Using Vacuum Pump

1. Completely tighten flare nuts A, B, C, D, connect manifold gage charge hose to a charge port of the low side service valve (see Fig. 43).
2. Connect charge hose to vacuum pump.
3. Fully open the low side of manifold gage (see Fig. 44).
4. Start vacuum pump
5. Evacuate using either deep vacuum or triple evacuation method.
6. After evacuation is complete, fully close the low side of manifold gage and stop operation of vacuum pump.
7. The factory charge contained in the outdoor unit is good for up to 25 ft. (8 m) of line length. For refrigerant lines longer than 25 ft (8 m), add charge up to the maximum allowable length as specified in the Residential Long Line Application Guide.
8. Disconnect charge hose from charge connection of the low side service valve.
9. Fully open service valves B and A.
10. Securely tighten caps of service valves.

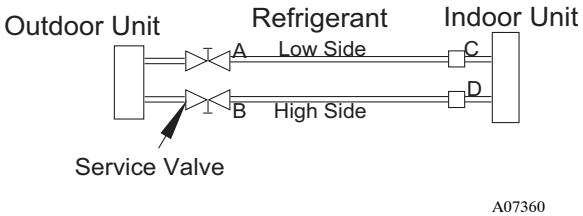

Fig. 43 - Service Valve

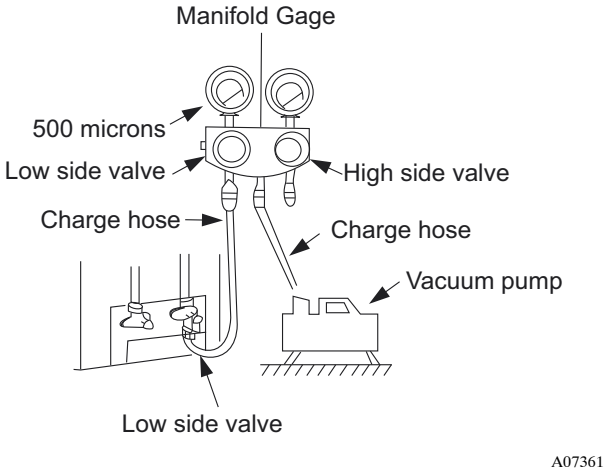

Fig. 44 - Manifold

Deep Vacuum Method

The deep vacuum method requires a vacuum pump capable of pulling a vacuum of 500 microns and a vacuum gage capable of accurately measuring this vacuum depth. The deep vacuum method is the most positive way of assuring a system is free of air and liquid water (see Fig. 45).

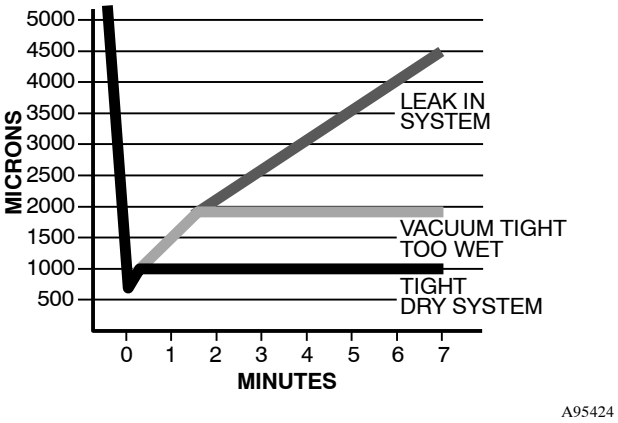

Fig. 45 - Deep Vacuum Graph

Triple Evacuation Method

The triple evacuation method should only be used when vacuum pump is only capable of pumping down to 28 in. of mercury vacuum and system does not contain any liquid water.
Refer to Fig. 46 and proceed as follows:

1. Pump system down to 28 in. of mercury and allow pump to continue operating for an additional 15 minutes.
2. Close service valves and shut off vacuum pump.
3. Connect a nitrogen cylinder and regulator to system and open until system pressure is 2 psig.
4. Close service valve and allow system to stand for 1 hr. During this time, dry nitrogen will be able to diffuse throughout the system absorbing moisture.
5. Repeat this procedure as indicated in Fig. 46. System will then be free of any contaminants and water vapor.

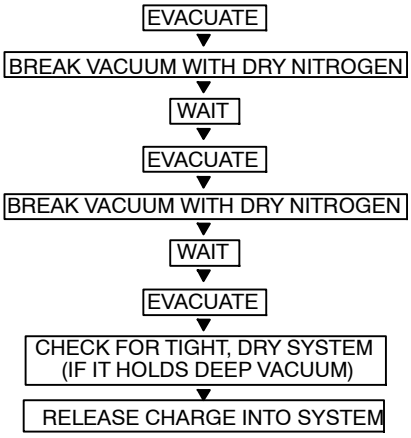

A95425

Fig. 46 - Triple Evacuation Method

To Start the Unit:

1. If the outdoor unit is equipped with a crankcase heater, turn on the indoor and outdoor disconnect switches to supply power to the system 6 hours before starting the system.
2. Release charge into the system by opening (back-seating) liquid and suction line service valves.
3. Set the wireless remote control or wired remote control below ambient temperature. Operate the unit for 15 minutes.
4. Refer to Table 12 to determine if additional charge is required. Also, if you have a long line application, refer to the Residential Long Line Application Guide to determine the additional charge that is required beyond 25 ft (7.6 m).
5. Charge should be added as liquid (not gas) slowly and carefully to low side to avoid liquid slugging.
6. Start unit with operation test. In test mode the unit will run in cooling and heating (on heat pumps) regardless if there is demand or not.

Test Operation For CASSETTE

Perform test operation after completing gas leak and electrical safety check. (See Fig. 47)

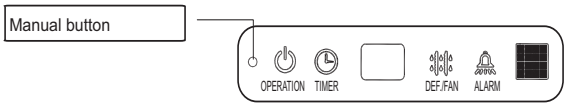

Fig. 47 - Display Panel

A150257

1. Push the "ON/OFF" button on Remote Control to begin testing.

NOTE: A protection feature prevents air conditioner from being activated for approximately 3 to 4 minutes.

2. Push MODE button, select COOLING, HEATING, FAN mode to check if all functions work correctly.
3. To run the test using the manual button in the indoor unit:

- Push the manual switch once to energize the unit.
  The set conditions of manual operation are as follows:
  · Preset set point: 76° F (24° C)
  · Fan speed: AUTO
  · Discharge air direction: Pre-set position based on operation in "Cool" or "Heat" mode
- Set manual switch to "OFF" (by pushing it twice again) after finishing test operation.

NOTE: **For Heat Pumps, follow the same procedure.**

Drainage Test

a. Open the cover of water supply intake by turning and pulling the cover.
b. Gradually insert a water bottle up into the fan coil unit and fill drain pan.
c. Operate the unit under COOLING mode and check a drain pump pumping (a time lag of 1 minute is allowed before water flowing out depending on the length of the drain pipe).
d. Check and confirm the water flows out through the drain hose.
e. Check the drain water drops at the end of the drain pipe.
f. Make sure there is no water leak at the drainage
g. Reassemble the cover of water supply intake.

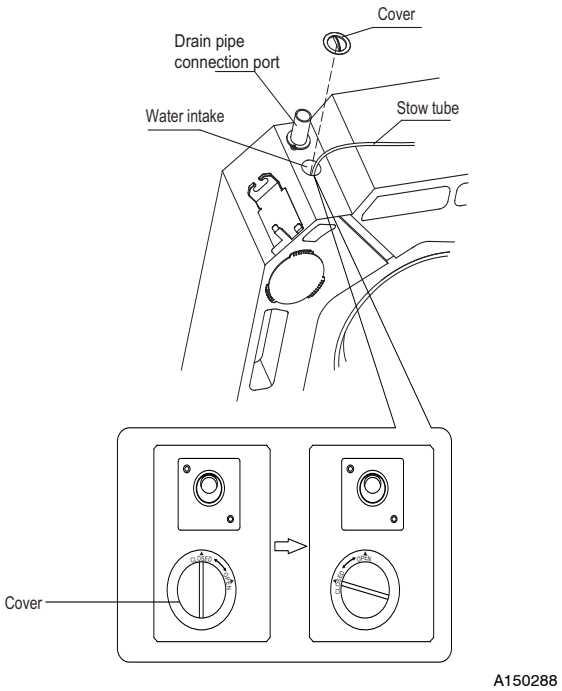

Fig. 48 - Drainage Test Detail

Water must flow regularly with condensate pump energized. If not, check the pipe slope or see if there are any pipe restrictions.

NOTE: The unit is equipped with a safety float switch to de-energize the compressor if the drain pan water level gets too high.

Service and maintenance

⚠ WARNING

ELECTRICAL SHOCK HAZARD

Failure to follow this warning could result in personal injury or death. Before installing, modifying, or servicing system, main electrical disconnect switch must be in the OFF position. There may be more than 1 disconnect switch.

Lock out and tag switch with a suitable warning label.

Remove unit grille, filter, and condensate pan for cleaning, lubricating, or replacing parts.

Minimum Maintenance

1. Check, clean, or replace air filter each month or as required.
2. Check cooling coil, drain pan, condensate trap, and condensate drain pan each cooling season for cleanliness. Clean as necessary.
3. Check fan motor and wheel for cleanliness each heating and cooling season.
4. Check electrical connections for tightness and controls for proper operation each heating and cooling season. Service as necessary.

To Clean or Replace Air Filters

1. Place a plastic sheet on the floor to catch any water that may spill from drain pan.
2. Slide filter out.
3. Vacuum clean or wash filter with soapy water. Rinse and let air dry. If filter needs replacing, filters are available from a local dealer.

Pump-down Procedure

The system may be pumped down in order to make repairs on the low side without losing complete refrigerant charge.

1. Attach pressure gage to suction service valve gage port.
2. Front-seat the mixed phase line valve.

⚠ WARNING

UNIT DAMAGE HAZARD

Failure to follow this caution may result in equipment damage or improper operation. The unit coils hold only the factory-designated amount of refrigerant.

Additional refrigerant may cause units to relieve pressure through the compressor internal pressure relief valve (indicated by a sudden rise of suction pressure) before suction pressure reaches 20 psig.

If this occurs, shut off unit immediately then front-seat the suction valve and remove and recover excess refrigerant following accepted practices.

3. Start unit and run until suction pressure reaches 5 psig.
4. Shut unit off and front-seat suction valve.
5. Depressurize low side of unit and recover refrigerant following accepted practices.

Filter Drier

Whenever the filter drier is exposed to the atmosphere it must be replaced. Only use factory specified liquid-line filter driers with rated working pressures less than 600 psig.

NOTE: Do not install a suction-line filter drier in the mixed phase line.

Refrigerant Charging

⚠ WARNING

PERSONAL INJURY AND/OR EQUIPMENT DAMAGE HAZARD

Failure to follow this warning could result in personal injury and/or equipment damage. Wear safety glasses and gloves when handling refrigerant. Do not overcharge system - this can cause compressor flooding.

All units are shipped with the refrigerant charge listed on nameplate. Ensure charging conditions stated int his document and the rating plate are followed.

NOTE: **Do not vent or depressurize unit refrigerant to atmosphere. Remove and recover refrigerant following accepted practices**.

TROUBLESHOOTING

Fault code

For ease of service, the indoor unit is equipped with diagnostic code display LEDs in the indoor units. This diagnostic display is a combination of flashing LEDs on the display panel or the front of the unit. If possible, always check the diagnostic codes displayed on the indoor unit. The diagnostic codes displayed in the indoor unit are listed in Table 21. Once a failure occurs with the indoor unit in operation, the green LED on the indoor unit flashes at intervals of 0.5 seconds. The fault code is deduced from the number of times the green LED flashes, blocking unit operation. Between one flash cycle and the next one, a pause of 3 to 4 seconds elapses.

Table 21 – Fault Codes

NO.	Malfunction	Running lamp	Timer lamp	Defrosting lamp	Alarm lamp	Display (digital tube)
1	Open or short circuit of T1 temperature sensor	X	☆	X	X	E2
2	Open or short circuit of T2 temperature sensor	☆	X	X	X	E3
3	Indoor EEPROM	☆	☆	X	X	E7
4	Water-level alarm	X	X	X	☆	E8
5	Refrigerant leakage detection	☆	X	X	☆	EC

NOTE: O (on) X(off) ☆(flash at 5Hz) ◎(flash at 0.5Hz)

Using the Emergency Button

The Emergency button is for use by a qualified service technician only. The Emergency button is for use when the room controller is inoperative. Use a small screwdriver to press the emergency button (see Fig. 47).

Manual operation can be accessed by pressing manual button on the display panel. Press the manual button repeatedly to change modes as follows:

- Once = AUTO mode [heat, cool or fan, 24°C and auto fan speed.]
- Twice = COOLING mode [switches to AUTO mode after 30 minutes (mainly used for trial operation)]
- Three times = OFF

Table 22 – Troubleshooting

PROBLEM	POSSIBLE CAUSE	SOLUTION
Compressor and Fan of the Outdoor Unit Will Not Start	Unit not energized	Check the main power connection.
	Main switch is set to OFF	Check and put it to ON position.
	Main switch fuses are blown	Replace fuses.
	Compressor cycling protection is on	Wait for 3 minutes.
	Main power voltage is too low	Check and set to the correct voltage.
	Electrical connections are too loose or are wrong	Check and tighten or correct connections.
Compressor Will Not Start, But Outdoor Fan is Operating	Electrical connections of compressor are loose or wrong	Check and tighten or repair compressor.
Compressor Stops Due to Over–temperature	Compressor burnt out; seized or protection device on	Check for the cause and replace compressor if necessary.
	Wrong refrigerant charge in unit (excessive or low) or air or other non–condensable gasses in the circuit	Drain refrigerant, evacuate and recharge. **CAUTION**: Do not vent refrigerant to the atmosphere; use refrigerant recovery equipment.
	Main voltage is too high or too low	Check voltage setting and adjust if necessary.
	Condenser coil obstructed	Remove obstruction.
	Outdoor fan off	Check cause and resume operation or repair.
	Wrong indoor unit thermistors	Replace thermistors.
	Refrigerant circuit clogged	Check and remove obstructions.
	Reversing valve faulty on heat pump models	Replace reversing valve.
	Expansion device clogged or covered with ice	Drain refrigerant, evacuate and recharge. **CAUTION**: Do not vent refrigerant to the atmosphere; use refrigerant recovery equipment.
Compressor Runs Continuously	Unit selected is too small for application requirements	Contact a qualified service technician for a system evaluation.
	Indoor temperature setting too low or too high	Check temperature setting.
	Outdoor unit fan faulty	Replace outdoor fan.
	Air or other non–condensable gasses in the circuit	Drain refrigerant, evacuate and recharge. **CAUTION**: Do not vent refrigerant to the atmosphere; use refrigerant recovery equipment.
	Obstructions at air intake or dirty indoor unit filters	Remove obstruction and/or clean filter.
Frequent Ice–Build–Up on Outdoor Coil	Outdoor fan is stopped	Check cause and repair.
Discharge Pressure Too High	Outdoor coil dirty or obstructed	Clean or remove obstructions.
	Condenser fan faulty	Replace condenser fan.
	Indoor temperature setting too low or too high	Check temperature setting.
	Air or other non–condensable gasses in the circuit	Drain refrigerant, evacuate and recharge. **CAUTION**: Do not vent refrigerant to the atmosphere; use refrigerant recovery equipment.
Discharge Pressure Too Low	Indoor temperature setting too high or too low	Check temperature setting.
	Outdoor coil dirty or obstructed	Clean or remove obstructions.
	Indoor unit air filter dirty	Clean filter.
Suction Pressure Too High	Indoor temperature setting too high or too low	Check temperature setting.
	Reversing valve faulty or internal leak	Replace reversing valve.
Suction Pressure Too Low	Indoor temperature setting too high or too low	Check temperature setting.
	Evaporator coil covered with ice	Air circulation on the evaporator not sufficient; check and repair.
	Expansion device or suction line clogged	Check and repair.
	Outdoor fan does not stop during defrost periods	Check electrical parts.
Outdoor Fan Cycling Due to Over–Temperature Protection	Electrical connection loose	Check connections.
	Fan motor burn out	Replace.
	Fan bearing seized	Check and repair.
	Expansion device clogged or covered with ice	Drain refrigerant, evacuate and replace. **CAUTION:** Do not vent refrigerant to the atmosphere; use refrigerant recovery equipment.

NOTE: For additional diagnostic information, refer to the "Service Manual".

Copyright 2015 CAC / BDP ● 7310 W. Morris St. ● Indianapolis, IN 46231
Edition Date:07/15

Catalog No:40MKCB–C–01SI

Manufacturer reserves the right to change, at any time, specifications and designs without notice and without obligations.

Replaces: NEW