40QNC / 38HDF
40QNQ / 38QRF
High–Wall Duct Free Split System
Sizes 018 to 036

Carrier®
Turn to the Experts.℠

Product Data

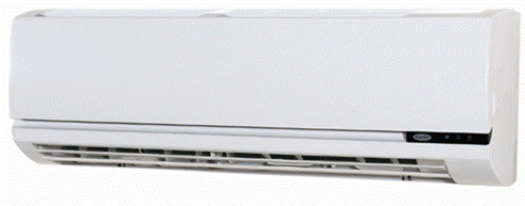

The ideal compliment to your ducted system when it is impractical or prohibitively expensive to use ductwork.

INDUSTRY LEADING FEATURES / BENEFITS

AN INEXPENSIVE AND CREATIVE SOLUTION TO DESIGN PROBLEMS.

The 38HDF(QRF) / 40QNC (QNQ) series duct-free split systems are a matched combination of an outdoor condensing unit and an indoor fan coil unit connected only by refrigerant tubing and wires.

The fan coil is mounted on the wall, near the ceiling. This selection of fan coils permits inexpensive and creative solutions to design problems such as:

- Add-ons to current space (an office or family room addition)
- Special space requirements
- When changes in the load cannot be handled by the existing system.
- When adding air conditioning to spaces that are heated by hydronic or electric heat and have no ductwork.
- Historical renovations or any application where preserving the look of the original structure is essential.

These compact indoor fan coil units take up very little space in the room and do not obstruct windows. The fan coils are attractively styled to blend with most room decors. Advanced system components incorporate innovative technology to provide reliable cooling performance at low sound levels.

LOW SOUND LEVELS

When noise is a concern, the duct-free split systems are the answer. The indoor units are whisper quiet. There are no compressors indoors, either in the conditioned space or directly over it, and there is none of the noise usually generated by air being forced through ductwork.

When sound ordinances and proximity to neighbors demand quiet operation, the 38HDF/QRF unit is the right choice: The advanced, horizontal blow-through airflow design distributes air more evenly over the coil.

SECURE OPERATION

If security is an issue, outdoor and indoor units are connected only by refrigerant piping and wiring to prevent intruders from crawling through ductwork. In addition, since 38HDF/QRF units can be installed close to an outside wall, coils are protected from vandals and severe weather.

FAST INSTALLATION

The small footprint of the outdoor unit provides additional benefits. Because they require minimal service and airflow clearances, the outdoor units can be located virtually anywhere - on the ground, roof, balcony, under a deck, or even mounted to an outside wall.

The indoor hi-wall units are simple to install. A mounting bracket is standard with the indoor units and only control wires and piping need to be run between indoor and outdoor units. These units are fast and easy to install ensuring minimal disruption to customers in the home or workplace. This makes the 38HDF (QRF) /40QNC (QNQ) duct-free split systems the equipment of choice, especially in retrofit situations.

SIMPLE SERVICING AND MAINTENANCE

A single panel provides immediate access to the isolated compressor and control compartment, allowing a service technician to check the unit operation without a loss of condenser airflow. In addition, the blow-through design of the outdoor section means that dirt accumulates on the inside surface of the coil. Coils can be cleaned from the outside using a pressure hose and detergent without removing grilles or using fin combs.

On all indoor units, service and maintenance expense is reduced due to easy-to-access cleanable filters. In addition, these high wall systems have extensive self-diagnostics to assist in troubleshooting.

BUILT-IN RELIABILITY

Duct-free split system indoor and outdoor units are designed to provide years of trouble-free operation.

The high wall indoor units include protection against freeze-up and high evaporator temperatures on heat pumps.

The condensing units and heat pumps are also protected. There is a 3-minute time delay before the compressor will re-start. An oversized accumulator, high and low pressure switches (or liquid line pressure switch on the heat pump), and compressor internal overload protection will ensure a reliable system that is ideal for light commercial applications.

INDIVIDUAL ROOM COMFORT

Maximum comfort is provided because each space can be controlled individually based on usage pattern. The air sweep feature provided permits optimal room air mixing to eliminate hot and cold spots for occupant comfort. In addition, year-round comfort can be provided with heat pumps.

ECONOMICAL OPERATION

The duct-free split system design allows individual room heating or cooling when required. There is no need to run large supply-air fans or chilled water pumps to handle a few spaces with unique load patterns. In addition, because air is moved only in the space required, no energy is wasted moving air through ducts.

EASY-TO-USE CONTROLS

The high-wall units have microprocessor-based controls to provided the ultimate in comfort and efficiency. The user friendly wireless remote control provides the interface between user and the unit.

FLEXIBILITY

A variety of accessories simplify the installation process and help meet system requirements and weather conditions. See table of available accessories on page 4.

AGENCY LISTINGS

All systems are listed with AHRI (Air Conditioning, Heating & Refrigeration Institute), and UL.

MODEL NUMBER NOMENCLATURE

INDOOR UNIT

40 — Fan Coil Unit

QNC — Unit Type
- **QNC** – Cooling Only
- **QNQ** – Heat Pump

018 — Nominal Capacity
- **018** – 1–1/2 Tons
- **024** – 2 Tons
- **030** – 2–1/2 Tons
- **036** – 3 Tons

–

3–01 — Voltage
- **3** – 208/230–1–60

OUTDOOR UNIT

38 — Air–Cooled Condenser

HDF — Unit Type
- **HDF** – Cooling Only
- **QRF** – Heat Pump

018 — Nominal Capacity
- **018** – 1–1/2 Tons
- **024** – 2 Tons
- **030** – 2–1/2 Tons
- **036** – 3 Tons

–

3–01 — Voltage
- **3** – 208/230–1–60
- **5** – 208/230–3–60*
- **6** – 460–3–60*

*Size 036 only

ARI Standard 210/240 UAC

ARI Standard 210/240 UHP

C US

AHRI* CAPACITY RATINGS

Outdoor Section	Indoor Section	Standard CFM		Net Cooling BTUH	SEER	EER	High Heat	
		Outdoor	Indoor				BTUH	HSPF
38HDF018–––3	40QNC01824–––3	1720	645	16,600	13	11.8	N/A	N/A
38HDF024–––3	40QNC01824–––3	1720	645	22,000	13	12	N/A	N/A
38HDF030–––3	30QNC030–––3	1720	730	27,000	13	11.7	N/A	N/A
38HDF036–––3	40QNC036–––3	3900	900	34,200	13	11.3	N/A	N/A
38HDF036–––5	40QNC036–––3	3900	900	34,200	13	11.3	N/A	N/A
38HDF036–––6	40QNC036–––3	3900	900	34,200	13	11.3	N/A	N/A
38QRF018–––3	40QNQ018–––3	1720	645	17,400	13	11.3	17,000	7.7
38QRF024–––3	40QNQ024–––3	1720	645	22,800	13	11.5	22,000	7.7
38QRF030–––3	30QNQ030–––3	3900	730	27,000	13	11.7	28,200	7.7
38QRF036–––3	40QNQ036–––3	3900	900	32,600	13	10.9	35,600	7.7
38QRF036–––5	40QNQ036–––3	3900	900	32,600	13	10.9	35,600	7.7
38QRF036–––6	40QNQ036–––3	3900	900	32,600	13	10.9	35,600	7.7

*Air Conditioning, Heating & Refrigeration Institute

Legend

HSPF – Heating Seasonal Performance Factor

SEER – Seasonal Energy Efficiency Ratio

NOTES:

1. Ratings are net values reflecting the effects of circulating fan heat. Ratings are based on: Cooling Standard: 80°F (26.67°C) db, 67°F (19.44°C) wb air entering indoor unit and 95°F (35°C) db air entering outdoor unit. High Temperature Heating Standard: 70°F (21.11°C) db air entering indoor unit and 47°F (8.33°C) db, 43°F (6.11°C) wb air entering outdoor unit.
2. Ratings are based on 25 ft. (7.62 m) of interconnecting refrigerant lines.
3. All system ratings are based on fan coil units operating at high fan speed. Consult Physical Data tables for airflows at all available fan speeds.

STANDARD FEATURES AND ACCESSORIES

Ease Of Installation	
Indoor and Outdoor Compact Size	S
Outdoor Unit Wall Mounting Kit	A
Outdoor Unit Stacking Kit	A
Indoor Mounting Bracket	S
Comfort Features	
Microprocessor Controls	S
Wireless Remote Control	S
Automatic Air Sweep	S
Air Direction Control	S
Auto Restart Function	S
Cold Blow Protection On Heat Pumps	S
Energy Saving Features	
Sleep Mode	S
Stop/Start Timer	S
Safety And Reliability	
3 Minute Time Delay For Compressor	S
Over Current Protection For Compressor	S
Crankcase Heater (standard on 38QRF030)	A
Indoor Coil Freeze Protection	S
Indoor Coil High Temperature Protection On Heat Pumps	S
Condenser High Temperature Protection On Heat Pumps	S
Accumulator On Cooling Only and Heat Pumps	S
Ease Of Service And Maintenance	
Cleanable Filters	S
Diagnostics	S
Liquid Line Pressure Taps	S
Suction And Discharge Pressure Taps	S
Application Flexibility	
Low Ambient Controls (–20° F) (–28.9° C)	A
3–Phase on size 036	S
Wind Baffles	A
Condensate Pumps	A
Wired Controls	A
Zone Manager	A
Warranty	
5 –Year Compressor Warranty	S
1 – Year Parts Warranty	S
Compressor Extended Warranty Years 6 Thru 10	O
All Parts And Labor Years 2 Thru 5	O
All Parts And Labor Years 2 Thru 5, Compressor Years 6 Thru 10	O

Legend
S Standard
A Accessory
O Optional

One Way Communication Remote Control

Comes standard with unit and has the following key features:

- 5 modes (heat pump)
- 24 hour timer
- Personal settings which enable the user to store preferred settings and retrieve them by the push of one button.
- Multiple addressable units to avoid interference when units are installed in same space. A command to one unit will not affect the second unit.

A0451

Fig. 1 – Wireless Remote

INDOOR UNIT ACCESSORIES

Condensate Pump

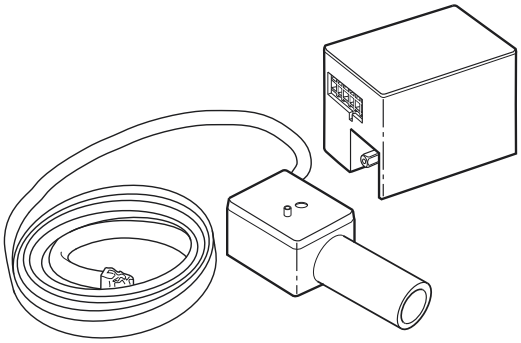

A07892

Fig. 2 – Condensate Pump Accessory

On high wall fan coils, the condensate pump has a lift capability of 12 ft (3.6 m) on the discharge side with the pump mounted in the fan coil or 6 ft (1.8 m) on the suction side if the pump is remote mounted. The pump is recommended when adequate drain line pitch cannot be provided, or when the condensate must move up to exit.

Wired Group Controller

For applications where the use of wireless remote control is not desired, the 40QNC/QNQ units can be controlled by means of a wired wall-mounted control with an LCD display.

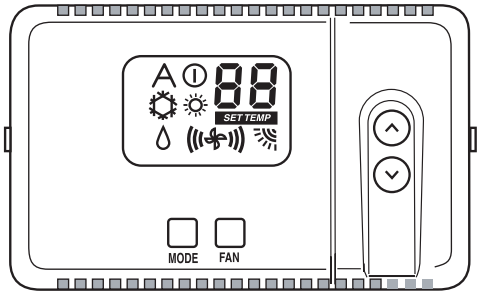

A08432

Fig. 3 – Wall Mounted Control with LCD Display

The wired control can also be used to control up to 6 daisy-chained units.

Zone Manager

For applications where more sophisticated controls are required, a Zone Manager that permits the connection of up to 32 different indoor units, divided into a maximum of eight different zones, can be used.

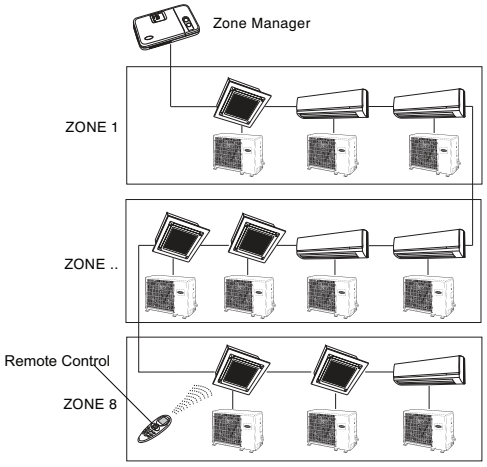

A08443

Fig. 4 – Zone Manager Connection

OUTDOOR UNIT ACCESSORIES

Low Ambient Kit

The kit controls condenser fan cycling using a pressure switch. It is specifically designed to cycle the outdoor fan-motor in response to saturated condensing pressure. This device maintains a constant saturated condensing temperature of 100 °F ± 10 °F (37.78°C ± 6.5 °C) at outdoor-air temperatures between 55 °F and -20 °F (12.78°C ± -12.22°C), and can be used on all outdoor units without changing the outdoor fan motor.

Winter Start Control

The Winter Start Control is a SPST delay relay. The control bypasses the low pressure switch for approximately 3 minutes to permit start-up for cooling operation under low load conditions at low ambient temperatures. This relay is recommended on cooling only systems that have the accessory Low Ambient Kit.

Isolation Relay

The Isolation Relay must be used when Low Ambient Kit is used with heat pumps to ensure the pressure switch is bypassed when unit is running in heat pump mode.

Liquid Line Solenoid Valve

The Liquid Line Solenoid Valve is an electrically operated shut-off valve that is installed at the outdoor unit to stop and start refrigerant flow in response to compressor operation. The valve maintains a column of refrigerant in the liquid line between compressor operating cycles and is required for certain long line applications and to improve system performance.

Crankcase Heater

The Crankcase Heater is available for units with scroll compressors and clamps onto the compressor oil sump. It is recommended for low ambient applications. The Crankcase Heater is standard on 38QRF030.

Wind Baffles

The Wind Baffle is a sheet metal shield used to provide improved unit operation during high winds and is recommended whenever the low ambient accessory is used.

Stacking Kit

Stacking Kits allow stacking of equally sized units or permit smaller units to be stacked on top of larger units.

NOTE: THIS KIT CANNOT BE USED WITH HEAT PUMPS.

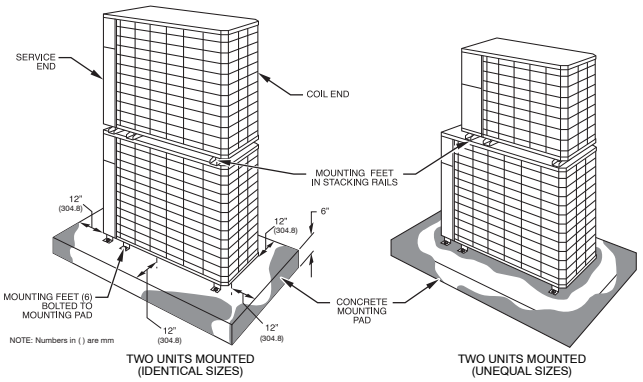

Fig. 5 – Stacking Kit

Wall Mounting Kit

Wall mount brackets are mounted on the outside of the structure to raise the unit from ground level, or to mount the unit on a wall adjacent to a sloping roof. Wall mounts are also useful in areas of heavy snowfall or where space is at a premium.

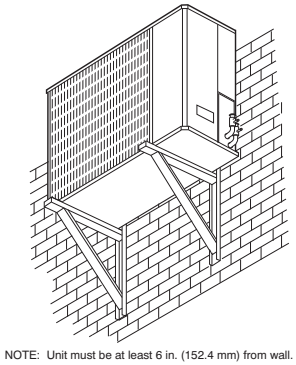

Fig. 6 – Wall Mounting Kit

DIMENSIONS - INDOOR

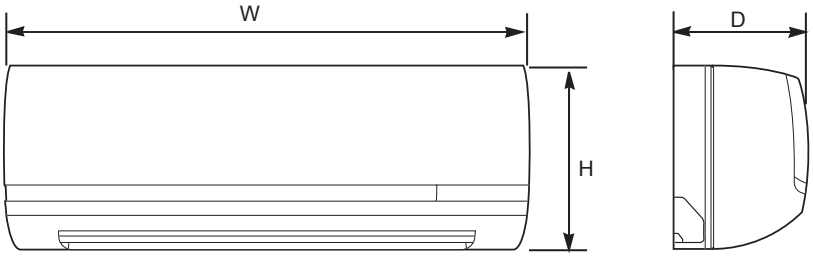

A08433

Model Size	W in. (mm)	H in. (mm)	D in. (mm)	Operating Weight lb (kg)
18K	42.5 (1080)	11.6 (295)	7.9 (201)	31 (14.1)
24K	42.5 (1080)	11.6 (295)	7.9 (201)	31 (14.1)
30K	57.5 (1461)	13.4 (340)	9.5 (241)	51 (23.2)
36K	57.5 (1461)	13.4 (340)	9.5 (241)	51 (23.2)

Fig. 7 – Indoor Dimensions

DIMENSIONS - OUTDOOR

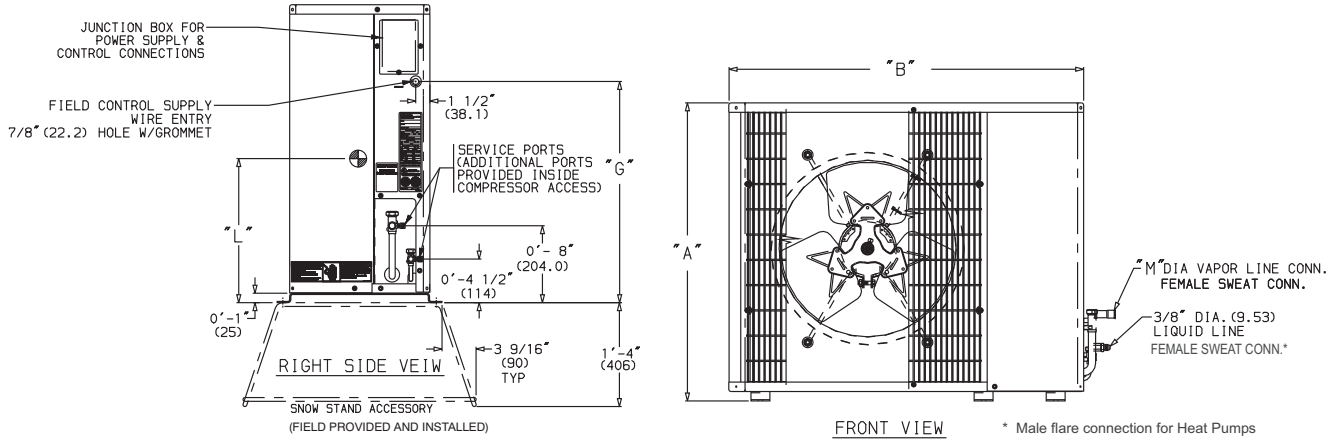

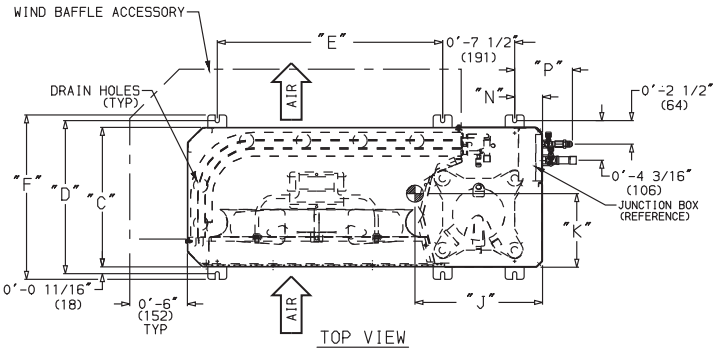

UNIT SIZE		M		OPERATING WT	
		in.	mm	lb	kg
38HDF	018	5/8	15.88	166	75.3
	024	5/8	15.88	176	79.8
	030	3/4	19.05	187	84.8
	036	3/4	19.05	250	113.4
38QRF	018	5/8	15.88	166	75.3
	024	5/8	15.88	176	79.8
	030	3/4	19.05	187	84.8
	036	3/4	19.05	232	105.2

UNIT MODELS		CHASSIS SIZE (Reference)	A	B	C	D	E	F	G	H	J	K	L	N	P
38HDF Unit Size	38QRF Unit Size														
018	018	0	2'-11 1/8" (638.2)	3'-0 15/16" (938.2)	1'-2 9/16" (369.9)	1'-4" (406.4)	1'-11 7/16" (595.3)	1'-5 3/16" (436.6)	1'-5 1/8" (435)	1'-10" (559.1)	1'-1" (330.2)	0'-6 5/8" (168.3)	0'-11 1/4" (285.8)	0'-2 15/16" (75)	0'-6" (152.4)
024,030	024	0.6	2'-7 1/8" (790.6)	3'-0 15/16" (938.2)	1'-2 9/16" (369.9)	1'-4" (406.4)	1'-11 7/16" (595.3)	1'-5 3/16" (436.6)	1'-11 1/8" (587.4)	2'-4" (711.5)	1'-2" (355.6)	0'-6 3/4" (171.5)	0'-11 5/8" (295.3)	0'-2 15/16" (75)	0'-6" (152.4)
036	030,036	1.0	3'-1 3/16" (944.6)	3'-8 9/16" (1131.9)	1'-5 1/16" (433.4)	1'-6 7/16" (468.3)	2'-6 1/2" (774.7)	1'-7 5/8" (498.5)	2'-5 3/16" (741)	2'-10 1/16" (865.5)	1'-1 11/16" (347.7)	0'-8 1/8" (206.4)	1'-3 7/8" (403.2)	0'-3 7/16" (88)	0'-6 1/2" (165.4)

NOTE: Dimensions shown in feet-inches. Dimensions in ( ) are millimeters.

A08434

Fig. 8 – Outdoor Unit Dimensions

CLEARANCES - INDOOR

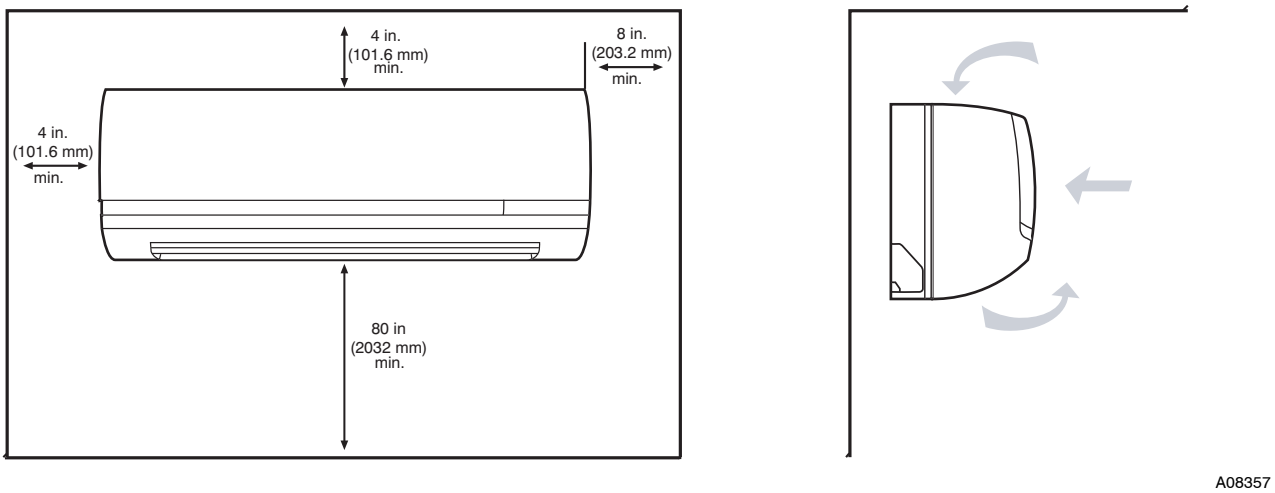

Fig. 9 – 40QNC,QNQ Indoor Unit Clearance

CLEARANCES - OUTDOOR

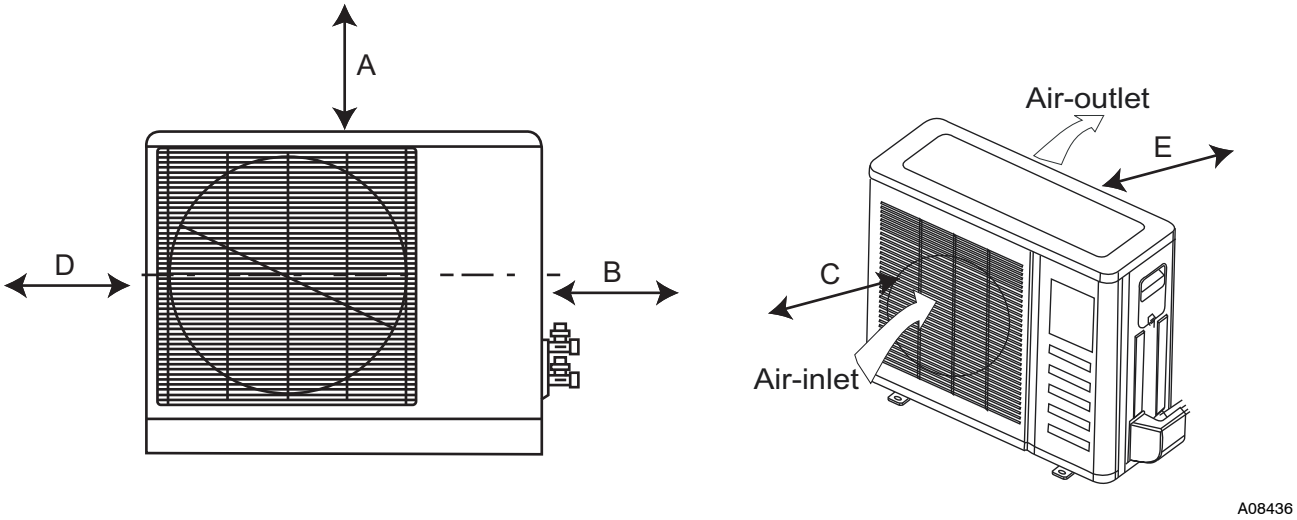

UNIT	Coil Facing Wall – in. (mm)	Fan Facing Wall – in. (mm)
A	24 (610)	24 (610)
B	36 (914)	36 (914)
C	36 (914)	8 (203)
D	6 (152)	8 (203)
E	6 (152)	36 (914)

Fig. 10 – Outdoor Unit Clearance

PHYSICAL DATA - OUTDOOR UNIT 38HDF

Outdoor Unit 38HDF	018	024	030	036	036	036
System Voltage	208/230–1–60	208/230–1–60	208/230–1–60	208/230–1–60	208/230–3–60	460–3–60
Nominal Capacity (Btuh)	18000	24000	30000	36000	36000	36000
Operating Weight lb(kg)	166 (75.3)	176 (79.8)	187 (84.8)	250 (113.4)	250 (113.4)	250 (113.4)
Refrigerant Type	R–410A					
Metering Device	Accurator at Outdoor Unit					
Piston Size Required	49	55	63	70	70	70
Unit Factory Charge lb(kg)	4.8(2.2)	5.3(2.4)	5(2.3)	8.5(3.9)	8.5(3.9)	8.5(3.9)
System Charge (25 ft line) lb(kg)	6.0(2.7)	6.3(2.9)	7.4(3.2)	8.5(3.9)	8.5(3.9)	8.5(3.9)
Additional Charge lb(kg)	1.2(.5)	1.0(.5)	2.4(.9)	0.0	0.0	0.0
Compressor						
Type	Scroll					
Model	ZP16K5E–PFV	ZP21K5E–PFV	ZP25K5E–PFV	ZP34K5E–PFV	ZP34KE–TF5	ZP34KE–TFD
Oil Charge (POE –oz)	25	25	25	42	42	42
Accumulator	Yes					
Outdoor Fan						
CFM/RPM	840/1720	840/1720	840/1720	850/3900	850/3900	850/3900
Diameter (in) .. No. of Blades	18…3	18…3	18…3	24…3	24…3	24…3
Motor HP	1/8	1/8	1/8	1/4	1/4	1/4
Outdoor Coil						
Face Area (sq. ft)	5.82	7.27	7.27	12.1	12.1	12.1
No. Rows	2	3	3	2	2	2
Fins per inch	20	20	20	20	20	20
Circuits	2	3	3	6	6	6
High Pressure Switch						
Cut–In (psig)	420±25	420±25	420±25	420±25	420±25	420±25
Cut–Out (psig)	650±10	650±10	650±10	650±10	650±10	650±10
Low Pressure Switch						
Cut–In (psig)	45±25	45±25	45±25	45±25	45±25	45±25
Cut–Out (psig)	20±5	20±5	20±5	20±5	20±5	20±5
Fusible Plug °F (°C)	210 (99)					
Refrigerant Lines						
Connection Type	Mixed Phase/Suction – Sweat					
Suction/Vapor (in) OD	5/8		3/4			
Mixed Phase * (in) OD	3/8					
Maximum Length** ft (m)	200 (61)					
Max Lift (Fan Coil Above) ft (m)	65 (20)					
Max Drop (Fan Coil Below) ft (m)	200 (61)					
Controls						
Control Voltage	24 vac					
External Finish	Gray					

* Mixed phase line needs to be insulated

** Refer to *Duct–Free Split System Long Line Guide* for additional information. Long Line accessories required byond 80 ft (24.4 m).

PHYSICAL DATA (CONT.) - OUTDOOR UNIT 38QRF

Outdoor Unit 38QRF	018	024	030	036	036	036
System Voltage	208/230–1–60	208/230–1–60	208/230–1–60	208/230–1–60	208/230–3–60	460–3–60
Nominal Capacity (Btuh)	18000	24000	30000	36000	36000	36000
Operating Weight lb(kg)	166 (75.3)	176 (79.8)	187 (84.8)	232 (105.2)	232 (105.2)	232 (105.2)
Refrigerant Type	R–410A					
Unit Factory Charge lb(kg)	5.5 (2.5)	6.8 (3.1)	10.7 (4.9)	10.0 (4.5)	10.0 (4.5)	10.0 (4.5)
System Charge (25 ft line) lb(kg)	6.3 (2.9)	7.3 (3.3)	10.7 (4.9)	10.0 (4.5)	10.0 (4.5)	10.0 (4.5)
Additional Charge lb(kg)	.8 (.36)	.5 (.23)	0.0	0.0	0.0	0.0
Metering Device	Accurator at Outdoor Unit					
Cooling Piston	49	55	63	70	70	70
Heating Piston	45	49	53	63	63	63
Compressor						
Type	Scroll					
Model	ZP16K5E–PFV	ZP21K5E–PFV	ZP25K5E–PFV	ZP34K5E–PFV	ZP34KE–TF5	ZP34KE–TFD
Oil Charge (POE –oz)	25	25	25	42	42	42
Crankcase Heater (watts)	NA	NA	40	NA	NA	NA
Outdoor Fan						
Rpm/CFM	840/1720	840/1720	850/3900	850/3900	850/3900	850/3900
Diameter (in) .. No. of Blades	18…3	18…3	18…3	24…3	24…3	24…3
Motor HP	1/8	1/8	1/4	1/4	1/4	1/4
Outdoor Coil						
Face Area (sq. ft)	5.82	7.27	12.1	12.1	12.1	12.1
No. Rows	2	3	2	2	2	2
Fins per inch	20	20	20	20	20	20
Circuits	3	3	6	6	6	6
High Pressure Switch						
Cut–In (psig)	420±25	420±25	420±25	420±25	420±25	420±25
Cut–Out (psig)	650±10	650±10	650±10	650±10	650±10	650±10
Low Pressure Switch						
Cut–In (psig)	45±25	45±25	45±25	45±25	45±25	45±25
Cut–Out (psig)	20±5					
Fusible Plug °F (°C)	210 (99)					
Refrigerant Lines						
Connection Type	Mixed Phase – Flare/Suction – Sweat					
Suction/Vapor (in) OD	5/8		3/4			
Mixed Phase * (in) OD	3/8					
Maximum Length** ft (m)	200 (61)					
Max Lift (Fan Coil Above) ft (m)	65 (20)					
Max Drop (Fan Coil Below) ft (m)	200 (61)					
Controls						
Control Voltage	24 vac					
External Finish	Gray					

* Mixed phase line needs to be insulated

** Refer to *Duct–Free Split System Long Line Guide* for additional information. Long Line accessories required byond 80 ft (24.4 m).

PHYSICAL DATA (CONT.) - INDOOR UNIT 40QNC

Indoor Unit 40QNC	18/24	18/24	30	36
System Voltage	208/230–1–60	208/230–1–60	208/230–1–60	208/230–1–60
Operating Weight lb(kg)	31 (14.1)	31 (14.1)	51 (23.2)	51 (23.2)
Refrigerant Type	R–410A			
Metering Device	Accurator At Outdoor Unit			
Moisture Removal Rate (Pints/hr)	5.4	7.9*	8.8	13
Indoor Fan				
Rpm/Cfm (High)	1335 / 645		1030 / 730	1200 / 900
Rpm/Cfm (Medium)	1120 / 525		930 / 630	1050 / 750
Rpm/Cfm (Low)	1000 / 460		830 / 530	900 / 600
Motor Watts	64		74	
Blower Quantity…Size (in)	1…4.0 x 33.7		2…4.2 x 23.5	2…4.2 x 23.5
Indoor Coil				
Face Area (sq. ft)	3	3	4.9	4.9
No. Rows	2	2	2	2
Fins per inch	16	16	18	18
Circuits	5	5	9	9
Filters				
Quantity…Size (in)	2…12.5 x 16.1	2…12.5 x 16.1	3…17.3 x 16.1	3…17.3 x 16.1
Controls	Integrated Microprocessor			
Remote Controller Options	Wireless (standard) , Wired (optional), Zone Control (optional)			
Diagnostics	Yes			
Fan Mode	High/Medium/Low/Auto			
Dehumidification Mode	Yes			
Sleep Mode	Yes			
Diagnostics	Yes			
Timer Mode	Yes			
Freeze Protection	Yes			
Test Mode	Yes			
Auto Restart	Yes			
Air Sweep	Yes			
Horizontal	Manual		Automatic	
Vertical	Automatic			
Control Voltage	24vac			
Refrigerant Lines				
Connection Type	Flare			
Mixed Phase Line (in) OD	3/8			
Vapor Line (in) OD	5/8	5/8	3/4	3/4
Condensate Drain				
Size (in)	5/8 (OD), 7/16 (ID)	5/8 (OD), 7/16 (ID)	3/4 (OD), 5/9 (ID)	3/4 (OD), 5/9 (ID)
External Finish	White	White	White	White

* When matched with 38HDF024

LEGEND

ID – Internal Diameter

OD – Outside Diameter

PHYSICAL DATA (CONT.) - INDOOR UNIT 40QNQ

Indoor Unit 40QNQ	18	24	30	36
System Voltage	208/230–1–60	208/230–1–60	208/230–1–60	208/230–1–60
Operating Weight lb(kg)	31 (14.1)	31 (14.1)	51 (23.2)	51 (23.2)
Refrigerant Type	R–410A			
Metering Device	Accurator At Outdoor Unit			
Moisture Removal Rate (Pints/hr)	5.2	7.9	9.2	12.8
Indoor Fan				
Rpm/Cfm (High)	1335 / 645		1030 / 730	1200 / 900
Rpm/Cfm (Medium)	1120 / 525		930 / 630	1050 / 750
Rpm/Cfm (Low)	1000 / 460		830 / 530	900 / 600
Motor Watts	64		74	
Blower Quantity…Size (in)	1…4.0 x 33.7		2…4.2 x 23.5	
Indoor Coil				
Face Area (sq. ft)	3	3	4.9	4.9
No. Rows	2	2	2	2
Fins per inch	16	20	18	18
Circuits	5	5	9	9
Filters				
Quantity…Size (in)	2…12.5 x 16.1	2…12.5 x 16.1	3…17.3 x 16.1	3…17.3 x 16.1
Controls	Integrated Microprocessor			
Remote Controller Options	Wireless (standard) , Wired (optional), Zone Control (optional)			
Diagnostics	Yes			
Defrost Method	Demand Defrost			
Fan Mode	High/Medium/Low/Auto			
Dehumidification Mode	Yes			
Warm Start Feature	Yes			
Sleep Mode	Yes			
Timer Mode	Yes			
Freeze Protection	Yes			
Test Mode	Yes			
Auto Restart	Yes			
Air Sweep	Yes			
Horizontal	Manual		Automatic	
Vertical	Automatic			
Control Voltage	24vac			
Refrigerant Lines				
Connection Type	Flare			
Mixed Phase Line (in) OD	3/8			
Vapor Line (in) OD	5/8	5/8	3/4	3/4
Condensate Drain				
Size (in)	5/8 (OD), 7/16 (ID)	5/8 (OD), 7/16 (ID)	3/4 (OD), 5/9 (ID)	3/4 (OD), 5/9 (ID)
External Finish	White	White	White	White

LEGEND
ID – Internal Diameter
OD – Outside Diameter

PERFORMANCE DATA

COOLING CAPACITIES
38HDF018 WITH 40QNC01824

Temp °F (°C) Air Entering Condenser (Edb)		Air Entering Evaporator – Cfm/BF											
		460/0.04				525/0.04				645/0.05			
		Air Entering Evaporator – Ewb °F (°C)											
		57 (13.9)	62 (16.7)	67 (19.4)	72 (22.2)	57 (13.9)	62 (16.7)	67 (19.4)	72 (22.2)	57 (13.9)	62 (16.7)	67 (19.4)	72 (22.2)
55 (12.8)	TCG	15.9	16.7	18.0	18.5	16.0	17.1	18.1	18.7	16.4	17.5	18.3	18.7
	SHG	14.5	12.3	10.9	9.2	14.7	12.9	10.9	9.4	15.1	13.2	11.3	9.4
	TC	15.7	16.5	17.8	18.3	15.8	16.9	17.9	18.5	16.2	17.3	18.1	18.5
	kW	0.88	0.89	0.89	0.89	0.89	0.89	0.90	0.89	0.89	0.89	0.89	0.89
	CMP	0.70	0.70	0.70	0.70	0.70	0.70	0.71	0.70	0.70	0.70	0.70	0.70
	LDB	48.8	53.9	57.2	61.2	51.0	54.8	59.0	62.3	53.4	57.0	60.7	64.2
	LWB	41.8	47.6	53.2	59.4	43.1	48.6	54.3	60.4	44.4	50.0	55.8	61.9
65 (18.3)	TCG	15.7	16.6	17.9	18.9	16.0	16.9	18.1	18.9	16.3	17.2	18.4	19.0
	SHG	14.8	12.5	11.0	9.2	15.0	12.9	11.1	9.3	15.3	13.4	11.5	9.5
	TC	15.5	16.4	17.7	18.7	15.8	16.7	17.9	18.7	16.1	17.0	18.2	18.8
	kW	1.00	1.00	1.00	1.01	1.00	1.00	1.00	1.00	1.00	1.00	1.00	1.00
	CMP	0.81	0.82	0.81	0.82	0.81	0.82	0.82	0.82	0.81	0.81	0.81	0.82
	LDB	48.1	53.5	57.0	61.1	50.4	54.8	58.6	62.4	53.1	56.8	60.2	64.1
	LWB	41.9	47.7	53.3	59.1	43.0	48.7	54.3	60.3	44.5	50.2	55.7	61.7
75 (23.9)	TCG	15.2	16.4	17.5	18.8	15.7	16.5	17.8	19.0	16.1	16.9	18.1	19.2
	SHG	14.6	12.7	10.8	9.2	15.2	12.9	11.1	9.3	16.1	13.4	11.4	9.5
	TC	15.0	16.2	17.3	18.6	15.5	16.3	17.6	18.8	15.9	16.7	17.9	19.0
	kW	1.12	1.13	1.13	1.13	1.13	1.13	1.13	1.13	1.13	1.13	1.13	1.13
	CMP	0.93	0.94	0.94	0.94	0.94	0.94	0.94	0.95	0.94	0.94	0.94	0.95
	LDB	48.5	52.9	57.5	61.1	49.9	54.8	58.7	62.5	51.6	56.6	60.4	64.1
	LWB	42.5	47.9	53.6	59.2	43.4	49.1	54.6	60.2	44.7	50.4	55.9	61.6
85 (29.4)	TCG	14.2	15.8	17.1	18.3	15.0	16.1	17.3	18.6	15.7	16.3	17.6	18.9
	SHG	14.2	12.7	10.7	9.0	14.9	13.1	10.9	9.2	15.7	13.4	11.4	9.4
	TC	14.0	15.6	16.8	18.1	14.7	15.9	17.1	18.4	15.5	16.1	17.4	18.7
	kW	1.24	1.26	1.27	1.27	1.25	1.27	1.27	1.27	1.27	1.27	1.27	1.27
	CMP	1.06	1.08	1.08	1.09	1.07	1.08	1.08	1.09	1.08	1.08	1.08	1.09
	LDB	49.4	53.0	57.7	61.6	50.4	54.3	58.9	62.6	52.4	56.6	60.5	64.2
	LWB	43.6	48.5	54.0	59.6	44.1	49.5	55.0	60.5	45.1	50.8	56.2	61.8
95 (35.0)	TCG	13.2	14.7	16.6	17.8	13.5	14.6	16.8	18.1	15.0	15.6	16.8	18.4
	SHG	12.3	12.1	10.7	8.7	13.5	11.6	10.9	9.1	15.0	13.5	11.0	9.3
	TC	13.0	14.5	16.4	17.6	13.3	14.4	16.6	17.9	14.8	15.4	16.6	18.2
	kW	1.38	1.40	1.42	1.43	1.38	1.40	1.42	1.43	1.41	1.41	1.41	1.43
	CMP	1.19	1.22	1.24	1.24	1.20	1.21	1.24	1.24	1.22	1.23	1.22	1.24
	LDB	53.7	54.3	57.5	62.2	53.2	57.3	59.0	62.9	53.5	56.5	60.7	64.4
	LWB	44.7	49.6	54.4	60.0	45.5	50.8	55.4	60.9	45.6	51.4	56.7	62.1
105 (40.6)	TCG	12.6	14.0	15.7	17.1	13.1	14.2	16.0	17.3	13.5	14.5	16.3	17.6
	SHG	12.6	12.0	10.4	8.5	13.1	12.5	10.7	8.7	13.5	13.2	11.2	9.1
	TC	12.4	13.8	15.5	16.9	12.9	14.0	15.8	17.1	13.3	14.3	16.1	17.4
	kW	1.53	1.56	1.58	1.59	1.53	1.56	1.59	1.59	1.54	1.57	1.59	1.60
	CMP	1.34	1.37	1.40	1.41	1.35	1.38	1.40	1.41	1.36	1.38	1.41	1.41
	LDB	52.9	54.4	58.2	62.6	54.2	55.5	59.3	63.7	56.3	57.0	60.7	64.8
	LWB	45.3	50.3	55.1	60.5	45.9	51.1	56.0	61.4	46.9	52.2	57.1	62.5
115 (46.1)	TCG	11.8	12.5	14.1	16.3	12.3	12.8	14.9	16.5	12.9	13.3	15.2	16.7
	SHG	11.8	10.7	9.2	8.2	12.3	11.0	10.3	8.4	12.9	11.8	10.9	8.7
	TC	11.6	12.3	13.9	16.1	12.1	12.5	14.7	16.2	12.7	13.1	15.0	16.5
	kW	1.69	1.70	1.74	1.77	1.70	1.71	1.76	1.78	1.71	1.72	1.76	1.78
	CMP	1.51	1.52	1.55	1.59	1.51	1.52	1.57	1.59	1.52	1.53	1.57	1.59
	LDB	54.7	57.4	60.7	63.2	55.6	58.4	60.1	64.1	57.4	59.4	61.3	65.5
	LWB	46.2	51.6	56.5	61.1	46.6	52.4	56.8	62.0	47.4	53.1	57.9	63.1
125 (51.7)	TCG	11.1	11.5	13.4	15.3	11.4	11.8	13.3	15.5	11.9	12.1	14.0	15.7
	SHG	11.1	10.4	9.6	8.0	11.4	10.8	9.2	8.1	11.9	11.3	10.4	8.4
	TC	10.9	11.3	13.2	15.1	11.2	11.6	13.1	15.3	11.7	11.9	13.8	15.5
	kW	1.87	1.88	1.93	1.97	1.88	1.88	1.92	1.97	1.88	1.89	1.94	1.97
	CMP	1.69	1.69	1.74	1.78	1.69	1.70	1.73	1.78	1.70	1.70	1.75	1.79
	LDB	56.3	57.9	59.9	63.7	57.5	58.9	62.3	64.7	59.2	60.4	62.1	65.9
	LWB	46.9	52.5	57.1	61.9	47.5	53.2	58.0	62.6	48.2	54.0	58.7	63.7

Rating condition

LEGEND
BF – Bypass Factor
CMP – Compressor
Edb – Entering Dry Bulb
Ewb – Entering Wet Bulb
kW – Total Power
LDB – Leaving Dry Bulb
LWB – Leaving Wet Bulb
SHG – Gross Sensible Capacity (1000 Btu/hour)
TC – Total Net Cooling Capacity (1000 Btu/hour)
TCG – Gross Cooling Capacity (1000 Btu/hour)

NOTES:
1. Direct interpolation is permissible. Do not extrapolate.
2. The SHG is based on 80°F (26.67°C) edb temperature of air entering indoor coil.
   Below 80°F (26.67°C) edb, subtract (corr factor x cfm) from SHG.
   Above 80°F (26.67°C) edb, add (corr factor x cfm) to SHG.
   Correction Factor = 1.10 x (1 – BF) x (edb – 80).

COOLING CAPACITIES
38HDF024 WITH 40QNC1824

Temp °F (°C) Air Entering Condenser (Edb)		Air Entering Evaporator – Cfm/BF											
		460/0.04				525/0.04				645/0.05			
		Air Entering Evaporator – Ewb °F (°C)											
		57 (13.9)	62 (16.7)	67 (19.4)	72 (22.2)	57 (13.9)	62 (16.7)	67 (19.4)	72 (22.2)	57 (13.9)	62 (16.7)	67 (19.4)	72 (22.2)
55 (12.8)	TCG	20.1	21.6	23.0	23.6	20.5	22.0	23.1	23.8	21.1	22.5	23.4	23.8
	SHG	17.5	15.5	13.7	11.6	18.0	16.0	13.8	11.7	18.9	16.6	14.1	11.8
	TC	19.9	21.4	22.8	23.4	20.3	21.8	22.9	23.6	20.9	22.3	23.2	23.6
	kW	1.10	1.10	1.10	1.10	1.10	1.10	1.10	1.10	1.10	1.10	1.10	1.10
	CMP	0.91	0.91	0.91	0.91	0.91	0.91	0.91	0.92	0.91	0.91	0.91	0.92
	LDB	48.3	52.3	55.9	59.9	50.0	53.7	57.6	61.4	52.1	55.7	59.7	63.4
	LWB	40.6	46.2	51.9	58.4	41.8	47.3	53.2	59.5	43.2	48.8	54.8	61.1
65 (18.3)	TCG	20.3	21.5	22.8	24.1	20.9	21.8	23.4	24.3	21.2	22.3	23.7	24.4
	SHG	18.5	15.8	13.6	11.7	19.3	16.1	14.0	11.8	19.6	16.7	14.4	12.0
	TC	20.1	21.3	22.6	23.9	20.7	21.6	23.1	24.1	21.0	22.1	23.5	24.2
	kW	1.25	1.25	1.26	1.26	1.25	1.26	1.26	1.26	1.25	1.26	1.26	1.26
	CMP	1.07	1.07	1.07	1.07	1.07	1.07	1.07	1.07	1.07	1.07	1.07	1.07
	LDB	46.4	51.7	56.1	59.7	47.7	53.5	57.2	61.2	50.9	55.6	59.3	63.1
	LWB	40.4	46.2	52.1	58.0	41.5	47.5	53.1	59.2	43.2	49.0	54.6	60.7
75 (23.9)	TCG	18.5	20.3	22.7	24.3	19.0	21.6	23.0	24.5	20.6	21.9	23.5	24.7
	SHG	16.4	14.8	13.6	11.7	16.9	16.5	13.9	11.9	19.5	16.9	14.5	12.1
	TC	18.3	20.1	22.5	24.0	18.8	21.4	22.8	24.3	20.3	21.7	23.3	24.5
	kW	1.4	1.41	1.43	1.43	1.40	1.43	1.43	1.43	1.42	1.43	1.43	1.43
	CMP	1.2	1.23	1.25	1.25	1.21	1.24	1.24	1.25	1.23	1.24	1.25	1.25
	LDB	50.4	53.6	56.0	59.7	51.9	52.9	57.4	61.2	51.0	55.2	59.2	63.0
	LWB	42.4	47.2	52.2	57.9	43.1	47.6	53.3	59.1	43.7	49.2	54.7	60.6
85 (29.4)	TCG	18.4	20.2	22.1	23.8	18.9	20.9	22.5	24.1	19.3	21.6	23.0	24.6
	SHG	17.6	14.8	13.4	11.4	18.2	16.4	13.9	11.6	17.4	16.9	14.4	12.0
	TC	18.2	20.0	21.9	23.6	18.7	20.7	22.3	23.9	19.1	21.4	22.8	24.4
	kW	1.6	1.6	1.62	1.63	1.57	1.60	1.62	1.63	1.58	1.6	1.62	1.63
	CMP	1.4	1.4	1.44	1.44	1.39	1.41	1.44	1.44	1.39	1.4	1.44	1.44
	LDB	48.0	53.6	56.3	60.3	49.7	53.0	57.5	61.5	45.9	55.3	59.3	63.0
	LWB	42.4	47.4	52.6	58.2	43.1	48.2	53.6	59.3	43.7	49.6	55.1	60.7
95 (35.0)	TCG	16.9	19.8	21.6	23.2	17.4	19.1	21.9	23.4	18.5	20.7	22.2	23.9
	SHG	15.8	15.0	13.5	11.2	16.3	14.6	13.7	11.4	17.8	16.5	14.2	11.8
	TC	16.7	19.6	21.4	23.0	17.2	18.9	21.7	23.2	18.3	20.5	22.0	23.7
	kW	1.74	1.8	1.83	1.83	1.75	1.78	1.83	1.84	1.8	1.81	1.83	1.84
	CMP	1.56	1.6	1.64	1.65	1.56	1.59	1.64	1.65	1.6	1.62	1.64	1.65
	LDB	51.4	53.1	56.1	60.7	53.0	56.0	57.7	61.9	53.8	55.8	59.5	63.4
	LWB	43.6	47.8	52.9	58.7	44.0	49.5	54.1	59.7	44.7	50.7	55.5	61.0
105 (40.6)	TCG	16.7	19.9	20.6	22.2	16.8	17.6	21.0	22.6	17.3	18.6	21.4	17.6
	SHG	15.0	13.5	13.1	10.8	15.6	15.1	13.5	11.1	15.8	14.9	14.0	9.1
	TC	16.5	19.7	20.4	22.0	16.6	17.4	20.8	22.4	17.1	18.4	21.2	17.4
	kW	1.95	2.0	2.04	2.06	1.95	2.00	2.05	2.06	2.0	1.98	2.06	1.60
	CMP	1.76	1.8	1.86	1.87	1.77	1.81	1.87	1.87	1.8	1.79	1.87	1.41
	LDB	52.9	56.0	56.9	61.4	54.1	55.0	58.1	62.4	54.8	58.2	59.7	64.8
	LWB	43.8	47.9	53.7	59.3	44.8	50.6	54.7	60.2	45.6	51.4	56.0	62.5
115 (46.1)	TCG	15.3	16.5	19.2	21.3	15.7	16.8	19.7	21.6	16.3	17.5	20.1	21.9
	SHG	15.3	13.5	12.6	10.5	15.7	13.9	13.0	10.7	16.3	14.3	13.6	11.0
	TC	15.1	16.3	19.0	21.1	15.5	16.6	19.5	21.4	16.1	17.3	19.9	21.7
	kW	2.15	2.17	2.25	2.30	2.16	2.18	2.27	2.30	2.17	2.2	2.28	2.30
	CMP	1.97	1.99	2.06	2.12	1.97	1.99	2.09	2.12	1.99	2.0	2.10	2.12
	LDB	52.3	55.9	57.7	61.9	53.9	57.2	59.0	63.1	55.8	59.0	60.4	64.4
	LWB	45.0	50.4	54.8	59.9	45.8	51.2	55.5	60.8	46.7	52.1	56.7	62.0
125 (51.7)	TCG	14.4	15.3	17.9	20.2	14.8	15.6	18.2	20.4	15.4	15.9	18.7	20.8
	SHG	14.4	13.1	12.1	10.1	14.8	13.5	12.5	10.3	15.4	14.1	13.0	10.6
	TC	14.2	15.1	17.7	20.0	14.6	15.4	18.0	20.2	15.2	15.7	18.5	20.6
	kW	2.38	2.40	2.48	2.56	2.39	2.40	2.49	2.56	2.40	2.41	2.52	2.56
	CMP	2.19	2.21	2.29	2.37	2.20	2.22	2.30	2.38	2.22	2.23	2.33	2.37
	LDB	53.9	56.6	58.7	62.6	55.3	57.7	59.7	63.7	57.2	59.3	61.3	65.0
	LWB	45.8	51.3	55.7	60.6	46.4	52.0	56.5	61.5	47.4	53.0	57.5	62.6

Rating condition

LEGEND
BF – Bypass Factor
CMP – Compressor
Edb – Entering Dry Bulb
Ewb – Entering Wet Bulb
kW – Total Power
LDB – Leaving Dry Bulb
LWB – Leaving Wet Bulb
SHG – Gross Sensible Capacity (1000 Btu/hour)
TC – Total Net Cooling Capacity (1000 Btu/hour)
TCG – Gross Cooling Capacity (1000 Btu/hour)

NOTES:
1. Direct interpolation is permissible. Do not extrapolate.
2. The SHG is based on 80°F (26.67°C) edb temperature of air entering indoor coil.
   Below 80°F (26.67°C) edb, subtract (corr factor x cfm) from SHG.
   Above 80°F (26.67°C) edb, add (corr factor x cfm) to SHG.
   Correction Factor = 1.10 x (1 – BF) x (edb – 80).

PERFORMANCE DATA (CONT.)

COOLING CAPACITIES
38HDF030 WITH 40QNC030

Temp °F (°C) Air Entering Condenser (Edb)		Air Entering Evaporator - Cfm/BF											
		530/0.04				630/0.04				730/0.05			
		Air Entering Evaporator - Ewb °F (°C)											
		57 (13.9)	62 (16.7)	67 (19.4)	72 (22.2)	57 (13.9)	62 (16.7)	67 (19.4)	72 (22.2)	57 (13.9)	62 (16.7)	67 (19.4)	72 (22.2)
55 (12.8)	TCG	26.6	27.8	28.6	29.6	27.2	28.0	28.9	29.9	27.6	28.5	29.3	30.4
	SHG	26.0	21.8	17.6	13.8	27.0	22.1	18.1	14.2	27.5	22.6	18.4	14.7
	TC	26.5	27.6	28.5	29.4	27.0	27.8	28.7	29.7	27.3	28.2	29.0	30.1
	kW	1.44	1.45	1.46	1.46	1.44	1.45	1.46	1.46	1.45	1.45	1.46	1.46
	CMP	1.25	1.25	1.26	1.26	1.25	1.25	1.26	1.27	1.25	1.25	1.26	1.27
	LDB	41.8	48.4	54.8	60.7	44.3	51.2	56.8	62.2	48.5	54.4	59.6	64.1
	LWB	39.2	45.4	51.8	58.2	40.9	47.2	53.4	59.6	43.2	49.2	55.3	61.3
65 (18.3)	TCG	26.4	27.6	28.7	29.8	27.0	28.0	29.1	30.1	27.7	28.5	29.5	30.5
	SHG	25.7	22.3	18.1	14.2	26.2	23.0	18.4	14.6	27.5	23.6	19.1	15.0
	TC	26.2	27.4	28.6	29.6	26.8	27.8	28.8	29.9	27.4	28.3	29.2	30.3
	kW	1.63	1.64	1.65	1.65	1.63	1.64	1.65	1.65	1.64	1.64	1.65	1.65
	CMP	1.44	1.44	1.45	1.45	1.44	1.44	1.45	1.46	1.44	1.45	1.46	1.46
	LDB	42.3	47.5	54.2	60.1	45.4	49.9	56.3	61.7	48.5	53.3	58.8	63.7
	LWB	39.4	45.5	51.8	58.1	41.0	47.2	53.3	59.5	43.1	49.2	55.2	61.2
75 (23.9)	TCG	25.5	26.9	28.2	29.3	26.3	27.3	28.5	29.6	27.1	27.8	28.9	30.0
	SHG	24.7	22.3	18.1	14.1	26.3	23.1	18.5	14.5	27.1	24.2	19.0	15.0
	TC	25.4	26.8	28.0	29.1	26.1	27.1	28.2	29.3	26.9	27.6	28.6	29.7
	kW	1.83	1.85	1.86	1.86	1.84	1.85	1.85	1.86	1.85	1.85	1.86	1.87
	CMP	1.63	1.65	1.66	1.67	1.64	1.65	1.66	1.67	1.65	1.66	1.66	1.67
	LDB	43.8	47.6	54.0	60.3	45.3	49.7	56.3	61.7	49.0	52.6	58.9	63.7
	LWB	40.1	46.0	52.1	58.3	41.5	47.6	53.7	59.8	43.4	49.5	55.5	61.4
85 (29.4)	TCG	24.2	26.1	27.7	28.7	25.2	26.6	28.0	28.9	26.5	27.1	28.3	29.3
	SHG	24.2	22.0	18.3	14.0	25.2	23.1	18.7	14.5	26.5	24.5	19.4	15.0
	TC	24.1	25.9	27.6	28.6	25.0	26.4	27.8	28.7	26.2	26.8	28.0	29.1
	kW	2.04	2.07	2.09	2.09	2.06	2.08	2.09	2.10	2.08	2.08	2.09	2.10
	CMP	1.84	1.88	1.89	1.90	1.86	1.88	1.89	1.90	1.88	1.88	1.89	1.90
	LDB	44.4	47.9	53.7	60.4	46.7	49.8	55.8	61.8	49.7	52.3	58.4	63.7
	LWB	41.1	46.6	52.4	58.6	42.2	48.0	53.9	60.1	43.8	49.9	55.8	61.7
95 (35.0)	TCG	23.1	24.7	27.0	28.1	24.1	25.3	27.2	28.3	25.4	26.0	27.3	28.6
	SHG	23.1	21.1	18.2	14.0	24.1	22.5	18.8	14.4	25.4	24.6	19.4	14.9
	TC	22.9	24.5	26.8	27.9	23.9	25.1	27.0	28.1	25.2	25.7	27.0	28.3
	kW	2.27	2.30	2.33	2.34	2.29	2.31	2.34	2.35	2.32	2.32	2.31	2.35
	CMP	2.07	2.10	2.14	2.15	2.10	2.12	2.14	2.15	2.12	2.13	2.11	2.15
	LDB	46.1	49.2	53.9	60.4	48.2	50.6	55.7	61.9	51.0	52.1	58.0	63.8
	LWB	42.0	47.5	52.8	59.0	43.0	48.8	54.3	60.4	44.4	50.5	56.1	62.0
105 (40.6)	TCG	22.0	23.1	25.8	27.2	22.8	23.6	26.2	27.4	24.1	24.4	26.5	17.7
	SHG	22.0	20.2	17.9	13.9	22.8	21.6	18.7	14.2	24.1	23.5	19.5	9.2
	TC	21.9	23.0	25.6	27.0	22.6	23.4	26.0	27.2	23.9	24.1	26.2	17.4
	kW	2.52	2.54	2.60	2.61	2.54	2.55	2.60	2.62	2.57	2.57	2.60	1.60
	CMP	2.32	2.34	2.40	2.42	2.34	2.36	2.40	2.42	2.38	2.38	2.41	1.40
	LDB	47.7	50.6	54.3	60.5	49.9	51.7	55.9	62.1	52.4	53.3	58.2	64.8
	LWB	42.7	48.6	53.5	59.5	43.8	49.8	54.9	60.8	45.1	51.2	56.5	62.5
115 (46.1)	TCG	20.8	21.5	24.0	25.9	21.5	22.0	24.6	26.2	22.7	22.9	25.1	26.4
	SHG	20.8	19.6	17.0	13.6	21.5	20.6	18.1	14.0	22.7	22.4	19.2	14.5
	TC	20.7	21.4	23.9	25.8	21.3	21.7	24.4	25.9	22.4	22.6	24.9	26.1
	kW	2.78	2.80	2.86	2.90	2.80	2.81	2.88	2.90	2.84	2.84	2.88	2.90
	CMP	2.59	2.60	2.67	2.70	2.61	2.62	2.68	2.70	2.64	2.64	2.69	2.71
	LDB	49.5	51.5	55.6	60.9	51.7	53.1	56.7	62.4	54.1	54.7	58.5	64.2
	LWB	43.6	49.6	54.6	60.1	44.7	50.8	55.7	61.3	45.9	52.0	57.1	62.8
125 (51.7)	TCG	19.3	19.8	22.1	24.2	20.0	20.6	22.6	24.5	21.2	21.4	23.3	24.7
	SHG	19.3	18.8	16.1	13.0	20.0	20.0	17.2	13.4	21.2	20.7	18.6	14.0
	TC	19.1	19.7	22.0	24.0	19.8	20.4	22.4	24.3	20.9	21.2	23.0	24.4
	kW	3.07	3.07	3.14	3.19	3.08	3.09	3.16	3.19	3.12	3.12	3.18	3.19
	CMP	2.87	2.88	2.94	2.99	2.88	2.90	2.96	3.00	2.93	2.93	2.98	3.00
	LDB	51.7	52.6	56.9	61.8	53.7	53.8	57.8	63.1	55.8	56.6	59.1	64.8
	LWB	44.7	50.7	55.7	61.0	45.7	51.5	56.7	62.1	46.7	52.7	57.9	63.5

Rating condition

LEGEND
BF – Bypass Factor
CMP – Compressor
Edb – Entering Dry Bulb
Ewb – Entering Wet Bulb
kW – Total Power
LDB – Leaving Dry Bulb
LWB – Leaving Wet Bulb
SHG – Gross Sensible Capacity (1000 Btu/hour)
TC – Total Net Cooling Capacity (1000 Btu/hour)
TCG – Gross Cooling Capacity (1000 Btu/hour)

NOTES:
1. Direct interpolation is permissible. Do not extrapolate.
2. The SHG is based on 80°F (26.67°C) edb temperature of air entering indoor coil.
   Below 80°F (26.67°C) edb, subtract (corr factor x cfm) from SHG.
   Above 80°F (26.67°C) edb, add (corr factor x cfm) to SHG.
   Correction Factor = 1.10 x (1 – BF) x (edb – 80).

PERFORMANCE DATA (CONT.)

COOLING CAPACITIES
38HDF036 WITH 40QNC036

Temp °F (°C) Air Entering Condenser (Edb)		Air Entering Evaporator - Cfm/BF											
		600/0.04				750/0.04				900/0.05			
		Air Entering Evaporator - Ewb °F (°C)											
		57 (13.9)	62 (16.7)	67 (19.4)	72 (22.2)	57 (13.9)	62 (16.7)	67 (19.4)	72 (22.2)	57 (13.9)	62 (16.7)	67 (19.4)	72 (22.2)
55 (12.8)	TCG	33.6	34.5	35.2	36.3	33.8	35.0	35.7	36.6	34.2	35.4	36.0	37.0
	SHG	31.3	26.1	21.2	16.5	31.6	26.4	22.0	17.1	32.2	26.9	22.0	17.6
	TC	33.4	34.3	35.0	36.1	33.5	34.7	35.5	36.4	33.9	35.1	35.6	36.7
	kW	1.96	1.97	1.98	1.99	1.96	1.97	1.98	1.99	1.97	1.97	1.98	1.99
	CMP	1.64	1.65	1.65	1.66	1.64	1.65	1.65	1.66	1.64	1.65	1.66	1.66
	LDB	40.0	47.0	53.7	59.9	43.2	49.6	55.0	61.0	46.8	52.6	58.0	62.8
	LWB	37.2	43.8	50.5	57.1	39.0	45.4	52.0	58.4	41.2	47.4	53.9	60.1
65 (18.3)	TCG	32.7	34.9	36.3	37.3	33.6	35.3	36.6	37.4	34.5	35.9	36.8	37.8
	SHG	31.2	26.9	22.2	17.0	33.2	27.6	22.5	17.6	34.5	28.5	23.1	18.1
	TC	32.5	34.7	36.1	37.1	33.3	35.0	36.4	37.1	34.2	35.6	36.5	37.5
	kW	2.19	2.21	2.22	2.22	2.20	2.21	2.22	2.23	2.21	2.21	2.22	2.23
	CMP	1.87	1.89	1.89	1.89	1.88	1.89	1.89	1.90	1.88	1.89	1.89	1.90
	LDB	40.1	45.9	52.4	59.4	41.2	48.2	54.4	60.5	44.4	50.9	56.8	62.2
	LWB	37.8	43.5	49.9	56.6	39.2	45.2	51.5	58.1	41.1	47.2	53.5	59.8
75 (23.9)	TCG	31.6	34.7	36.5	37.6	32.5	35.2	36.7	37.9	33.9	35.7	37.2	38.2
	SHG	30.2	27.4	22.9	17.3	31.6	28.0	23.2	18.0	33.9	29.2	23.7	18.7
	TC	31.4	34.5	36.3	37.4	32.3	34.9	36.5	37.6	33.6	35.4	36.9	37.9
	kW	2.44	2.47	2.48	2.49	2.45	2.48	2.49	2.49	2.47	2.48	2.49	2.50
	CMP	2.11	2.15	2.16	2.17	2.13	2.15	2.16	2.17	2.15	2.15	2.17	2.17
	LDB	41.5	45.4	51.4	58.9	43.1	47.6	53.6	60.0	45.0	50.2	56.2	61.6
	LWB	38.6	43.6	49.8	56.4	39.8	45.3	51.4	57.9	41.4	47.3	53.3	59.6
85 (29.4)	TCG	30.3	33.3	36.0	37.3	31.5	34.1	36.2	37.5	33.1	34.9	36.7	37.9
	SHG	29.3	26.7	22.7	17.9	30.4	27.9	23.3	18.1	31.7	29.3	24.0	18.7
	TC	30.1	33.1	35.8	37.1	31.2	33.9	36.0	37.3	32.7	34.6	36.4	37.6
	kW	2.71	2.74	2.78	2.79	2.73	2.76	2.78	2.79	2.75	2.77	2.79	2.79
	CMP	2.38	2.41	2.45	2.47	2.40	2.43	2.46	2.46	2.42	2.45	2.46	2.47
	LDB	42.6	46.2	51.7	58.2	44.5	47.8	53.5	59.9	47.3	50.0	55.9	61.6
	LWB	39.4	44.5	50.1	56.5	40.5	45.8	51.7	58.0	41.8	47.6	53.5	59.7
95 (35.0)	TCG	29.2	31.7	35.2	36.9	30.4	32.5	35.6	37.0	31.3	33.4	36.0	37.4
	SHG	28.2	25.6	22.7	18.1	29.1	26.9	23.2	18.3	31.3	28.6	24.0	18.7
	TC	29.0	31.5	35.0	36.7	30.1	32.2	35.4	36.7	31.0	33.1	35.7	37.0
	kW	3.00	3.04	3.10	3.12	3.03	3.06	3.10	3.12	3.05	3.08	3.11	3.12
	CMP	2.68	2.71	2.78	2.79	2.70	2.73	2.78	2.79	2.72	2.75	2.78	2.79
	LDB	43.9	47.7	51.7	57.9	46.1	48.9	53.6	59.6	47.7	50.7	55.8	61.7
	LWB	40.2	45.5	50.5	56.8	41.1	46.7	52.0	58.2	42.7	48.3	53.8	59.9
105 (40.6)	TCG	28.1	30.1	33.5	35.9	28.4	30.7	34.2	36.3	29.9	31.5	35.1	17.8
	SHG	27.3	24.4	21.8	17.8	28.4	25.8	22.8	18.2	29.9	27.5	24.0	9.2
	TC	27.9	29.9	33.3	35.7	28.2	30.5	34.0	36.1	29.5	31.2	34.7	17.4
	kW	3.32	3.36	3.43	3.47	3.34	3.37	3.45	3.47	3.37	3.39	3.46	1.60
	CMP	3.00	3.03	3.10	3.14	3.01	3.05	3.12	3.15	3.04	3.07	3.14	1.27
	LDB	45.2	49.1	52.8	58.3	46.8	50.1	54.0	59.7	49.2	51.9	55.8	61.6
	LWB	40.9	46.5	51.5	57.2	42.3	47.7	52.7	58.5	43.5	49.2	54.2	60.2
115 (46.1)	TCG	26.4	28.4	31.4	34.8	27.0	28.8	32.1	35.1	28.3	29.6	33.0	35.5
	SHG	26.4	23.5	20.7	17.5	27.0	24.5	21.8	17.9	28.3	26.4	23.2	18.5
	TC	26.2	28.2	31.2	34.6	26.7	28.5	31.8	34.9	28.0	29.2	32.7	35.1
	kW	3.67	3.71	3.78	3.85	3.69	3.72	3.79	3.86	3.72	3.74	3.82	3.86
	CMP	3.35	3.38	3.45	3.53	3.36	3.39	3.47	3.53	3.39	3.41	3.49	3.54
	LDB	46.3	50.2	54.2	58.6	48.5	51.7	55.1	60.1	50.8	53.0	56.6	61.8
	LWB	42.1	47.5	52.6	57.8	43.2	48.7	53.7	59.0	44.3	50.1	55.1	60.6
125 (51.7)	TCG	24.4	26.2	29.2	33.0	25.5	26.5	29.8	33.4	26.4	27.1	30.5	33.8
	SHG	24.4	22.7	19.6	16.9	25.5	23.5	20.6	17.3	26.4	25.1	22.1	17.9
	TC	24.2	26.0	29.0	32.8	25.2	26.3	29.5	33.1	26.1	26.8	30.2	33.5
	kW	4.07	4.08	4.16	4.27	4.07	4.09	4.17	4.27	4.09	4.11	4.19	4.28
	CMP	3.74	3.76	3.83	3.95	3.75	3.76	3.85	3.94	3.77	3.78	3.87	3.95
	LDB	48.8	51.3	55.5	59.3	50.3	52.8	56.5	60.7	52.8	54.4	57.7	62.3
	LWB	43.3	48.8	53.8	58.6	44.0	49.9	54.8	59.8	45.3	51.2	56.1	61.2

Rating condition

LEGEND
BF – Bypass Factor
CMP – Compressor
Edb – Entering Dry Bulb
Ewb – Entering Wet Bulb
kW – Total Power
LDB – Leaving Dry Bulb
LWB – Leaving Wet Bulb
SHG – Gross Sensible Capacity (1000 Btu/hour)
TC – Total Net Cooling Capacity (1000 Btu/hour)
TCG – Gross Cooling Capacity (1000 Btu/hour)

NOTES:
1. Direct interpolation is permissible. Do not extrapolate.
2. The SHG is based on 80°F (26.67°C) edb temperature of air entering indoor coil.
   Below 80°F (26.67°C) edb, subtract (corr factor x cfm) from SHG.
   Above 80°F (26.67°C) edb, add (corr factor x cfm) to SHG.
   Correction Factor = 1.10 x (1 – BF) x (edb – 80).

PERFORMANCE DATA (CONT.)

COOLING CAPACITIES
38QRF018 WITH 40QNQ018

Temp °F (°C) Air Entering Condenser (Edb)		Air Entering Evaporator – Cfm/BF											
		460/0.04				525/0.04				645/0.05			
		Air Entering Evaporator – Ewb °F (°C)											
		57 (13.9)	62 (16.7)	67 (19.4)	72 (22.2)	57 (13.9)	62 (16.7)	67 (19.4)	72 (22.2)	57 (13.9)	62 (16.7)	67 (19.4)	72 (22.2)
55 (12.8)	TCG	16.9	17.9	19.3	20.4	17.1	18.2	19.6	20.5	17.5	18.6	19.8	20.7
	SHG	15.6	13.3	11.7	10.1	15.8	13.6	11.9	10.2	16.2	14.3	12.2	10.4
	TC	16.6	17.7	19.1	20.2	16.9	18.0	19.3	20.3	17.3	18.4	19.6	20.5
	kW	0.95	0.96	0.96	0.96	0.96	0.96	0.97	0.96	0.96	0.96	0.97	0.96
	CMP	0.77	0.78	0.78	0.78	0.77	0.78	0.78	0.78	0.78	0.78	0.79	0.78
	LDB	48.9	53.8	57.2	60.8	51.0	55.3	58.8	62.1	53.6	57.0	60.7	63.8
	LWB	42.1	47.8	53.3	59.1	43.2	48.8	54.3	60.2	44.6	50.2	55.7	61.6
65 (18.3)	TCG	16.4	17.5	18.8	20.3	16.8	17.7	19.2	20.5	17.3	18.1	19.6	20.8
	SHG	15.5	13.3	11.4	9.9	16.2	13.6	11.9	10.0	17.3	14.2	12.4	10.2
	TC	16.2	17.3	18.6	20.1	16.6	17.5	19.0	20.3	17.1	17.9	19.4	20.6
	kW	1.08	1.08	1.09	1.09	1.08	1.09	1.09	1.10	1.08	1.09	1.09	1.10
	CMP	0.89	0.90	0.91	0.91	0.89	0.90	0.90	0.91	0.89	0.90	0.90	0.91
	LDB	49.0	53.7	57.8	61.2	50.3	55.3	58.8	62.6	51.8	57.1	60.3	64.2
	LWB	42.6	48.1	53.6	59.2	43.5	49.2	54.6	60.2	44.8	50.5	55.9	61.6
75 (23.9)	TCG	15.8	17.1	18.4	19.9	16.2	17.3	18.7	20.2	16.8	17.6	19.0	20.5
	SHG	15.2	13.5	11.4	9.8	16.1	13.9	11.7	9.9	16.8	14.3	12.0	10.1
	TC	15.6	16.9	18.2	19.7	16.0	17.1	18.5	20.0	16.6	17.4	18.8	20.3
	kW	1.21	1.22	1.23	1.23	1.21	1.22	1.23	1.23	1.22	1.22	1.23	1.24
	CMP	1.02	1.03	1.04	1.05	1.03	1.03	1.04	1.05	1.03	1.04	1.04	1.05
	LDB	49.7	53.4	57.9	61.5	50.5	54.9	59.2	62.7	52.5	57.0	60.9	64.3
	LWB	43.1	48.5	54.0	59.5	44.0	49.5	54.9	60.5	45.1	50.9	56.3	61.7
85 (29.4)	TCG	15.1	16.3	17.8	19.3	15.6	16.6	18.1	19.6	16.2	17.0	18.4	20.0
	SHG	15.1	13.1	11.3	9.5	15.6	13.6	11.6	9.8	16.2	14.3	12.0	10.1
	TC	14.9	16.1	17.6	19.1	15.4	16.4	17.9	19.4	16.0	16.8	18.2	19.8
	kW	1.35	1.37	1.38	1.38	1.35	1.37	1.38	1.39	1.37	1.37	1.38	1.39
	CMP	1.16	1.18	1.19	1.20	1.17	1.18	1.19	1.20	1.18	1.19	1.19	1.20
	LDB	49.9	54.1	58.1	62.1	51.4	55.3	59.3	63.0	53.6	56.9	60.9	64.4
	LWB	43.8	49.2	54.5	59.9	44.6	50.1	55.4	60.8	45.6	51.3	56.6	62.0
95 (35.0)	TCG	14.5	15.4	17.1	18.6	14.9	15.7	17.4	18.9	15.5	16.0	17.6	19.2
	SHG	14.5	12.8	11.2	9.2	14.9	13.2	11.5	9.4	15.5	13.9	11.9	9.8
	TC	14.3	15.2	16.9	18.4	14.7	15.5	17.2	18.7	15.3	15.8	17.4	19.0
	kW	1.50	1.52	1.54	1.55	1.51	1.52	1.54	1.55	1.52	1.53	1.54	1.56
	CMP	1.32	1.33	1.35	1.36	1.32	1.34	1.36	1.37	1.33	1.34	1.36	1.37
	LDB	51.1	54.8	58.3	62.6	52.6	56.0	59.6	63.5	54.8	57.5	61.2	64.8
	LWB	44.4	50.0	55.0	60.4	45.2	50.9	55.9	61.3	46.2	52.0	57.1	62.4
105 (40.6)	TCG	13.8	14.5	16.1	17.7	14.2	14.7	16.3	18.0	14.7	15.1	16.7	18.3
	SHG	13.8	12.4	10.8	8.9	14.2	12.9	11.1	9.1	14.7	13.7	11.6	9.4
	TC	13.6	14.3	15.9	17.5	14.0	14.5	16.1	17.8	14.5	14.9	16.5	18.1
	kW	1.67	1.68	1.72	1.73	1.67	1.69	1.72	1.73	1.69	1.69	1.72	1.73
	CMP	1.48	1.50	1.53	1.54	1.49	1.50	1.54	1.54	1.50	1.51	1.54	1.55
	LDB	52.6	55.5	59.1	63.1	54.1	56.6	60.2	64.1	56.0	57.9	61.5	65.5
	LWB	45.2	50.8	55.9	61.0	45.9	51.6	56.7	61.9	46.8	52.6	57.7	63.0
115 (46.1)	TCG	13.0	13.4	15.0	16.8	13.4	13.7	15.2	17.0	13.9	14.1	15.5	17.3
	SHG	13.0	12.0	10.3	8.6	13.4	12.6	10.7	8.8	13.9	13.3	11.2	9.1
	TC	12.8	13.2	14.8	16.6	13.2	13.5	15.0	16.8	13.7	13.9	15.3	17.0
	kW	1.85	1.86	1.90	1.92	1.85	1.86	1.90	1.92	1.87	1.87	1.91	1.93
	CMP	1.66	1.67	1.71	1.74	1.67	1.68	1.71	1.74	1.68	1.69	1.72	1.74
	LDB	54.1	56.3	60.0	63.7	55.5	57.0	60.9	64.7	57.4	58.5	62.2	65.9
	LWB	45.9	51.7	56.7	61.7	46.6	52.4	57.5	62.5	47.4	53.3	58.4	63.5
125 (51.7)	TCG	12.1	12.4	13.8	15.5	12.4	12.6	14.0	15.8	12.9	13.0	14.2	16.1
	SHG	12.1	11.7	9.8	8.2	12.4	12.1	10.2	8.4	12.9	13.0	10.7	8.7
	TC	11.9	12.1	13.6	15.3	12.2	12.4	13.8	15.6	12.7	12.8	14.0	15.8
	kW	2.04	2.04	2.09	2.13	2.05	2.05	2.09	2.13	2.06	2.06	2.10	2.13
	CMP	1.85	1.86	1.90	1.94	1.86	1.87	1.91	1.94	1.87	1.87	1.91	1.94
	LDB	55.9	56.9	60.9	64.5	57.2	58.1	61.8	65.3	58.9	59.0	63.0	66.5
	LWB	46.7	52.6	57.6	62.6	47.4	53.3	58.3	63.2	48.1	54.1	59.2	64.2

Rating condition

Not recommended for long–term operation.

LEGEND

BF – Bypass Factor
CMP – Compressor
Edb – Entering Dry Bulb
Ewb – Entering Wet Bulb
kW – Total Power
LDB – Leaving Dry Bulb
LWB – Leaving Wet Bulb
SHG – Gross Sensible Capacity (1000 Btu/hour)
TC – Total Net Cooling Capacity (1000 Btu/hour)
TCG – Gross Cooling Capacity (1000 Btu/hour)

NOTES:

1. Direct interpolation is permissible. Do not extrapolate.
2. The SHG is based on 80°F (26.67°C) edb temperature of air entering indoor coil.
   Below 80°F (26.67°C) edb, subtract (corr factor x cfm) from SHG.
   Above 80°F (26.67°C) edb, add (corr factor x cfm) to SHG.
   Correction Factor = 1.10 x (1 – BF) x (edb – 80).

COOLING CAPACITIES
38QRF024 WITH 40QNQ024

Temp °F (°C) Air Entering Condenser (Edb)		Air Entering Evaporator – Cfm/BF											
		460/0.04				525/0.04				645/0.05			
		Air Entering Evaporator – Ewb °F (°C)											
		57 (13.9)	62 (16.7)	67 (19.4)	72 (22.2)	57 (13.9)	62 (16.7)	67 (19.4)	72 (22.2)	57 (13.9)	62 (16.7)	67 (19.4)	72 (22.2)
55 (12.8)	TCG	21.3	22.3	23.5	25.0	21.6	22.6	23.6	24.8	22.1	23.3	24.6	25.0
	SHG	19.2	16.3	13.9	12.3	19.5	16.7	14.0	12.2	20.1	17.5	15.0	12.4
	TC	21.1	22.1	23.3	24.8	21.4	22.4	23.4	24.6	21.8	23.1	24.4	24.8
	kW	1.11	1.12	1.13	1.12	1.12	1.12	1.13	1.13	1.12	1.12	1.12	1.13
	CMP	0.93	0.93	0.95	0.94	0.93	0.93	0.95	0.95	0.93	0.93	0.94	0.94
	LDB	41.8	47.9	53.1	56.5	43.9	49.6	54.9	58.4	46.6	51.3	55.8	60.4
	LWB	37.4	43.6	49.7	55.7	38.8	44.9	51.1	57.2	40.5	46.4	52.3	58.8
65 (18.3)	TCG	19.6	21.8	23.5	25.5	20.2	22.4	23.7	25.4	21.7	22.8	24.8	25.3
	SHG	17.4	16.0	14.2	12.6	18.2	16.8	14.2	12.4	20.7	17.0	15.4	12.3
	TC	19.4	21.6	23.3	25.3	20.0	22.2	23.5	25.2	21.5	22.6	24.6	25.1
	kW	1.26	1.28	1.28	1.28	1.27	1.28	1.29	1.29	1.27	1.29	1.28	1.30
	CMP	1.08	1.09	1.09	1.09	1.08	1.09	1.10	1.10	1.08	1.10	1.09	1.11
	LDB	45.4	48.6	52.4	55.9	46.4	49.4	54.6	58.1	45.6	52.1	55.2	60.5
	LWB	39.2	44.1	49.7	55.3	40.2	45.1	51.0	56.8	40.9	46.8	52.2	58.6
75 (23.9)	TCG	19.1	21.2	22.3	24.7	19.6	22.2	23.6	25.4	20.2	22.4	24.1	25.7
	SHG	17.4	15.8	13.0	12.1	18.1	17.3	14.2	12.5	18.8	17.3	14.7	12.6
	TC	18.9	21.0	22.0	24.5	19.4	22.0	23.4	25.2	20.0	22.2	23.9	25.5
	kW	1.42	1.45	1.46	1.46	1.42	1.45	1.46	1.46	1.44	1.45	1.46	1.46
	CMP	1.23	1.27	1.27	1.27	1.24	1.26	1.28	1.27	1.25	1.27	1.28	1.28
	LDB	45.4	48.9	54.9	57.0	46.6	48.3	54.4	57.9	48.9	51.7	56.2	60.0
	LWB	39.8	44.7	50.8	55.9	40.8	45.3	51.1	56.8	42.1	47.1	52.7	58.4
85 (29.4)	TCG	18.5	20.1	22.8	24.3	18.9	20.6	23.0	24.7	19.5	21.8	23.5	25.4
	SHG	17.1	15.3	14.3	11.6	17.6	15.8	14.2	11.9	18.4	17.8	14.8	12.5
	TC	18.2	19.9	22.6	24.1	18.7	20.4	22.8	24.5	19.3	21.6	23.3	25.2
	kW	1.59	1.62	1.65	1.66	1.60	1.63	1.65	1.66	1.61	1.65	1.65	1.66
	CMP	1.40	1.44	1.46	1.47	1.41	1.44	1.47	1.47	1.43	1.46	1.47	1.47
	LDB	45.9	49.8	52.2	57.9	47.4	51.1	54.4	59.0	49.4	50.8	56.1	60.1
	LWB	40.4	45.7	50.3	56.2	41.5	46.7	51.6	57.3	42.7	47.5	53.0	58.6
95 (35.0)	TCG	17.7	19.3	21.9	23.6	18.2	19.7	22.1	24.1	18.9	20.2	22.4	24.7
	SHG	16.7	15.0	14.0	11.3	17.3	15.5	14.1	11.7	17.9	16.3	14.4	12.1
	TC	17.5	19.1	21.7	23.4	18.0	19.5	21.9	23.9	18.7	20.0	22.2	24.5
	kW	1.78	1.81	1.86	1.86	1.79	1.82	1.89	1.87	1.80	1.83	1.95	1.87
	CMP	1.59	1.63	1.68	1.68	1.60	1.64	1.71	1.68	1.62	1.65	1.77	1.68
	LDB	46.7	50.4	52.8	58.5	48.1	51.6	54.0	59.4	50.4	53.3	56.3	60.8
	LWB	41.2	46.5	51.1	56.8	42.1	47.5	52.1	57.7	43.2	48.7	53.6	59.0
105 (40.6)	TCG	16.9	18.3	20.2	22.7	17.3	18.6	21.2	23.1	17.5	19.1	21.8	23.5
	SHG	16.1	14.6	12.8	11.2	16.5	15.1	13.9	11.2	17.5	15.9	14.6	11.6
	TC	16.7	18.1	20.0	22.5	17.1	18.4	21.0	22.9	17.3	18.9	21.5	23.3
	kW	1.99	2.01	2.07	2.09	1.99	2.02	2.09	2.09	2.09	2.04	2.09	2.09
	CMP	1.80	1.83	1.88	1.91	1.81	1.84	1.90	1.91	1.90	1.85	1.91	1.91
	LDB	47.8	51.3	55.2	58.8	49.5	52.4	54.9	60.2	51.0	53.9	56.3	61.6
	LWB	42.0	47.4	52.5	57.4	42.9	48.4	53.0	58.4	44.4	49.6	54.2	59.7
115 (46.1)	TCG	15.8	17.2	19.1	21.8	16.2	17.5	19.4	22.0	16.9	17.9	20.5	22.2
	SHG	15.8	14.2	12.3	10.8	16.2	14.7	12.7	11.0	16.9	15.5	14.2	11.1
	TC	15.6	17.0	18.9	21.6	16.0	17.3	19.2	21.8	16.7	17.7	20.3	22.0
	kW	2.20	2.24	2.29	2.34	2.21	2.24	2.30	2.34	2.23	2.26	2.34	2.33
	CMP	2.02	2.05	2.11	2.15	2.03	2.06	2.12	2.15	2.04	2.07	2.15	2.15
	LDB	48.6	52.0	56.0	59.4	50.0	53.1	57.1	60.6	51.9	54.5	56.9	62.5
	LWB	43.2	48.4	53.5	58.1	43.9	49.3	54.3	59.2	44.8	50.4	55.1	60.5
125 (51.7)	TCG	14.8	15.9	17.8	20.4	15.2	16.2	18.1	20.8	16.0	16.6	18.5	21.0
	SHG	14.8	13.7	11.9	10.4	15.2	14.3	12.2	10.6	16.0	15.1	12.8	10.9
	TC	14.6	15.7	17.6	20.2	15.0	16.0	17.9	20.6	15.7	16.4	18.3	20.8
	kW	2.45	2.47	2.53	2.60	2.45	2.48	2.54	2.59	2.47	2.49	2.56	2.60
	CMP	2.26	2.28	2.34	2.42	2.27	2.29	2.36	2.41	2.28	2.31	2.37	2.41
	LDB	50.5	52.9	57.0	60.1	51.9	53.9	58.0	61.3	53.6	55.1	59.3	62.7
	LWB	44.1	49.6	54.5	59.2	44.8	50.4	55.3	60.0	45.6	51.4	56.4	61.2

Rating condition

LEGEND
BF – Bypass Factor
CMP – Compressor
Edb – Entering Dry Bulb
Ewb – Entering Wet Bulb
kW – Total Power
LDB – Leaving Dry Bulb
LWB – Leaving Wet Bulb
SHG – Gross Sensible Capacity (1000 Btu/hour)
TC – Total Net Cooling Capacity (1000 Btu/hour)
TCG – Gross Cooling Capacity (1000 Btu/hour)

NOTES:
1. Direct interpolation is permissible. Do not extrapolate.
2. The SHG is based on 80°F (26.67°C) edb temperature of air entering indoor coil.
   Below 80°F (26.67°C) edb, subtract (corr factor x cfm) from SHG.
   Above 80°F (26.67°C) edb, add (corr factor x cfm) to SHG.
   Correction Factor = 1.10 x (1 – BF) x (edb – 80).

PERFORMANCE DATA (CONT.)

COOLING CAPACITIES
38QRF030 WITH 40QNQ030

Temp °F (°C) Air Entering Condenser (Edb)		Air Entering Evaporator – Cfm/BF											
		530/0.04				630/0.04				730/0.05			
		Air Entering Evaporator – Ewb °F (°C)											
		57 (13.9)	62 (16.7)	67 (19.4)	72 (22.2)	57 (13.9)	62 (16.7)	67 (19.4)	72 (22.2)	57 (13.9)	62 (16.7)	67 (19.4)	72 (22.2)
55 (12.8)	TCG	25.9	26.7	27.4	28.3	26.2	27.0	27.7	28.5	26.7	27.3	28.1	28.9
	SHG	25.9	20.4	16.8	13.0	26.2	20.8	17.0	13.5	26.7	21.4	17.2	14.0
	TC	25.7	26.5	27.2	28.1	26.0	26.8	27.5	28.3	26.4	27.1	27.8	28.6
	kW	1.47	1.48	1.48	1.48	1.47	1.48	1.48	1.48	1.47	1.48	1.48	1.48
	CMP	1.27	1.28	1.28	1.28	1.28	1.28	1.28	1.28	1.28	1.28	1.28	1.29
	LDB	42.0	50.4	55.9	61.9	45.4	53.0	58.3	63.2	49.7	56.0	61.0	64.9
	LWB	39.8	46.2	52.6	58.9	41.6	47.9	54.1	60.3	43.7	49.8	55.9	61.9
65 (18.3)	TCG	26.0	27.1	28.0	28.9	26.5	27.5	28.3	29.1	27.2	27.9	28.6	29.5
	SHG	25.5	21.9	17.4	13.6	26.5	22.3	17.9	14.0	27.2	22.9	18.5	14.4
	TC	25.9	27.0	27.9	28.7	26.3	27.3	28.1	28.9	27.0	27.6	28.3	29.3
	kW	1.65	1.66	1.66	1.66	1.65	1.66	1.66	1.67	1.66	1.66	1.66	1.67
	CMP	1.46	1.46	1.47	1.47	1.46	1.46	1.47	1.47	1.46	1.46	1.47	1.47
	LDB	42.5	48.1	55.1	61.0	45.0	50.9	57.1	62.5	49.0	54.2	59.5	64.5
	LWB	39.7	45.9	52.2	58.6	41.4	47.6	53.8	60.0	43.4	49.6	55.7	61.7
75 (23.9)	TCG	25.2	26.8	27.9	28.9	26.1	27.2	28.3	29.2	27.0	27.7	28.6	29.6
	SHG	24.6	22.2	18.0	13.9	26.1	23.1	18.3	14.3	27.0	24.1	18.9	14.8
	TC	25.0	26.6	27.8	28.7	25.9	26.9	28.0	29.0	26.7	27.4	28.3	29.3
	kW	1.85	1.86	1.87	1.87	1.86	1.86	1.87	1.87	1.86	1.86	1.87	1.87
	CMP	1.66	1.66	1.67	1.67	1.66	1.67	1.67	1.68	1.66	1.67	1.67	1.68
	LDB	43.9	47.7	54.3	60.5	45.6	49.9	56.6	62.0	49.3	52.8	59.0	64.0
	LWB	40.4	46.1	52.2	58.5	41.7	47.7	53.8	60.0	43.5	49.7	55.7	61.6
85 (29.4)	TCG	24.0	25.8	27.7	28.8	25.0	26.5	28.0	29.0	26.4	27.1	28.4	29.3
	SHG	24.0	21.8	18.4	14.0	25.0	23.2	19.0	14.5	26.4	24.7	19.6	15.1
	TC	23.8	25.6	27.5	28.6	24.8	26.3	27.8	28.8	26.1	26.8	28.1	29.0
	kW	2.05	2.08	2.09	2.10	2.07	2.09	2.09	2.10	2.08	2.09	2.10	2.10
	CMP	1.86	1.89	1.90	1.90	1.88	1.89	1.90	1.90	1.89	1.89	1.90	1.91
	LDB	44.8	48.2	53.6	60.4	47.1	49.7	55.6	61.8	50.0	52.2	58.2	63.6
	LWB	41.3	46.8	52.4	58.6	42.4	48.1	53.9	60.1	43.9	49.9	55.8	61.8
95 (35.0)	TCG	22.9	24.4	27.0	28.4	23.9	25.0	27.3	28.7	25.2	25.6	27.3	29.0
	SHG	22.9	21.0	18.3	14.3	23.9	22.4	19.0	14.6	25.2	24.4	19.6	15.1
	TC	22.8	24.2	26.9	28.2	23.7	24.8	27.1	28.5	24.9	25.3	27.0	28.7
	kW	2.28	2.31	2.34	2.35	2.30	2.32	2.34	2.35	2.32	2.33	2.31	2.35
	CMP	2.08	2.11	2.14	2.15	2.10	2.12	2.15	2.16	2.13	2.13	2.12	2.16
	LDB	46.4	49.4	53.7	59.9	48.6	50.8	55.4	61.6	51.4	52.4	57.7	63.6
	LWB	42.1	47.7	52.8	58.8	43.2	49.0	54.3	60.2	44.6	50.7	56.0	61.9
105 (40.6)	TCG	21.7	22.8	25.4	27.7	22.6	23.3	26.1	28.0	23.3	24.0	26.8	17.7
	SHG	21.7	20.3	17.6	14.3	22.6	21.6	18.6	14.8	23.3	23.3	20.0	9.2
	TC	21.6	22.7	25.3	27.5	22.4	23.1	25.8	27.8	23.0	23.8	26.6	17.4
	kW	2.53	2.55	2.60	2.62	2.54	2.56	2.61	2.63	2.67	2.57	2.61	1.60
	CMP	2.33	2.35	2.41	2.43	2.35	2.36	2.42	2.43	2.47	2.37	2.42	1.40
	LDB	48.1	50.5	54.7	59.9	50.2	51.8	56.1	61.4	53.5	53.7	57.7	63.4
	LWB	43.0	48.8	53.7	59.2	44.0	50.0	55.0	60.5	45.6	51.4	56.4	62.1
115 (46.1)	TCG	20.4	21.0	23.6	26.5	21.3	21.6	24.2	26.8	22.4	22.5	24.8	27.2
	SHG	20.4	19.5	16.7	14.0	21.3	20.7	17.8	14.5	22.4	22.2	19.2	15.1
	TC	20.3	20.9	23.5	26.3	21.1	21.4	24.0	26.6	22.1	22.3	24.6	26.9
	kW	2.79	2.81	2.86	2.91	2.81	2.82	2.88	2.92	2.83	2.84	2.89	2.92
	CMP	2.60	2.61	2.67	2.72	2.61	2.62	2.68	2.72	2.64	2.64	2.70	2.72
	LDB	50.0	51.6	56.0	60.3	52.0	52.9	57.1	61.7	54.5	55.0	58.7	63.5
	LWB	43.9	49.9	54.8	59.8	44.9	51.0	55.9	61.1	46.1	52.2	57.3	62.6
125 (51.7)	TCG	19.0	19.2	21.6	24.4	19.8	19.9	22.1	25.0	20.8	21.0	22.7	25.5
	SHG	19.0	18.5	15.9	13.2	19.8	19.6	16.9	13.9	20.8	20.5	18.2	14.8
	TC	18.8	19.1	21.5	24.3	19.6	19.7	21.9	24.8	20.5	20.7	22.4	25.3
	kW	3.08	3.09	3.15	3.23	3.10	3.10	3.16	3.23	3.13	3.13	3.18	3.23
	CMP	2.89	2.89	2.95	3.03	2.91	2.91	2.96	3.03	2.93	2.93	2.98	3.04
	LDB	52.2	53.1	57.2	61.4	54.0	54.4	58.3	62.5	56.4	56.8	59.7	63.9
	LWB	45.0	51.1	56.0	60.9	45.8	52.0	57.0	61.9	47.0	52.9	58.2	63.2

Rating condition

Not recommended for long–term operation.

LEGEND

BF – Bypass Factor
CMP – Compressor
Edb – Entering Dry Bulb
Ewb – Entering Wet Bulb
kW – Total Power
LDB – Leaving Dry Bulb
LWB – Leaving Wet Bulb
SHG – Gross Sensible Capacity (1000 Btu/hour)
TC – Total Net Cooling Capacity (1000 Btu/hour)
TCG – Gross Cooling Capacity (1000 Btu/hour)

NOTES:

1. Direct interpolation is permissible. Do not extrapolate.
2. The SHG is based on 80°F (26.67°C) edb temperature of air entering indoor coil.
   Below 80°F (26.67°C) edb, subtract (corr factor x cfm) from SHG.
   Above 80°F (26.67°C) edb, add (corr factor x cfm) to SHG.
   Correction Factor = 1.10 x (1 – BF) x (edb – 80).

PERFORMANCE DATA (CONT.)

COOLING CAPACITIES
38QRF036 WITH 40QNQ036

Temp °F (°C) Air Entering Condenser (Edb)		Air Entering Evaporator – Cfm/BF											
		600/0.04				750/0.04				900/0.05			
		Air Entering Evaporator – Ewb (F)											
		57 (13.9)	62 (16.7)	67 (19.4)	72 (22.2)	57 (13.9)	62 (16.7)	67 (19.4)	72 (22.2)	57 (13.9)	62 (16.7)	67 (19.4)	72 (22.2)
55 (12.8)	TCG	31.0	32.5	33.5	34.6	31.4	32.8	33.8	34.8	32.0	33.2	34.1	35.2
	SHG	30.0	25.1	20.4	15.9	30.8	25.6	20.7	16.4	32.0	25.9	21.3	16.9
	TC	30.8	32.3	33.3	34.4	31.2	32.6	33.6	34.7	31.8	33.0	33.9	35.0
	kW	1.89	1.90	1.91	1.91	1.89	1.90	1.91	1.91	1.90	1.90	1.91	1.91
	CMP	1.56	1.57	1.58	1.58	1.57	1.58	1.58	1.59	1.57	1.58	1.58	1.59
	LDB	39.0	46.0	52.9	59.3	41.4	48.3	54.8	60.4	44.4	51.6	57.0	62.2
	LWB	37.5	43.6	50.2	56.7	39.1	45.3	51.7	58.1	41.1	47.3	53.6	59.8
65 (18.3)	TCG	30.2	32.5	34.0	35.1	31.1	32.9	34.2	35.3	32.1	33.3	34.5	35.6
	SHG	29.2	25.7	21.2	16.2	30.4	26.4	21.5	16.9	32.1	27.3	21.9	17.4
	TC	30.0	32.3	33.8	34.9	30.9	32.7	34.0	35.1	31.9	33.2	34.3	35.4
	kW	2.11	2.13	2.14	2.14	2.12	2.13	2.14	2.15	2.12	2.13	2.14	2.15
	CMP	1.79	1.80	1.81	1.82	1.79	1.80	1.81	1.82	1.80	1.81	1.82	1.82
	LDB	40.1	45.2	51.7	58.8	41.9	47.3	53.7	59.9	44.4	50.0	56.3	61.6
	LWB	38.0	43.6	49.9	56.5	39.3	45.2	51.5	57.9	41.1	47.2	53.4	59.6
75 (23.9)	TCG	29.2	31.8	33.6	35.1	30.1	32.3	34.0	35.4	31.6	32.8	34.5	35.7
	SHG	28.4	25.5	21.4	16.8	29.5	26.4	21.9	17.1	30.6	27.6	22.5	17.6
	TC	29.0	31.6	33.4	34.9	29.9	32.1	33.8	35.2	31.4	32.6	34.3	35.5
	kW	2.35	2.38	2.39	2.40	2.37	2.38	2.40	2.41	2.38	2.39	2.40	2.41
	CMP	2.03	2.06	2.07	2.08	2.04	2.06	2.07	2.08	2.05	2.06	2.07	2.08
	LDB	41.1	45.4	51.4	58.1	43.1	47.2	53.2	59.6	46.1	49.7	55.6	61.4
	LWB	38.8	44.1	50.1	56.4	40.0	45.6	51.6	57.8	41.4	47.5	53.4	59.6
85 (29.4)	TCG	28.0	30.4	33.0	34.5	29.1	31.0	33.3	34.8	30.0	31.9	33.7	35.1
	SHG	27.4	24.8	21.2	16.9	28.2	25.9	21.8	17.2	30.0	27.5	22.6	17.5
	TC	27.8	30.2	32.8	34.3	28.9	30.8	33.1	34.6	29.9	31.7	33.5	34.9
	kW	2.61	2.66	2.68	2.69	2.63	2.66	2.68	2.69	2.65	2.67	2.68	2.69
	CMP	2.28	2.33	2.35	2.36	2.30	2.34	2.35	2.37	2.32	2.34	2.36	2.37
	LDB	42.5	46.4	51.6	57.9	44.6	47.9	53.3	59.4	46.7	49.7	55.6	61.4
	LWB	39.7	45.0	50.5	56.7	40.7	46.3	51.9	58.1	42.2	47.9	53.7	59.8
95 (35.0)	TCG	26.9	28.9	32.0	33.8	27.5	29.5	32.4	34.1	28.8	30.2	32.8	34.4
	SHG	26.2	24.0	21.0	16.8	27.5	25.1	21.6	17.1	28.8	26.6	22.5	17.6
	TC	26.7	28.7	31.8	33.6	27.3	29.3	32.2	33.9	28.6	30.0	32.6	34.2
	kW	2.90	2.94	2.99	3.00	2.91	2.95	2.99	3.01	2.94	2.97	2.99	3.01
	CMP	2.57	2.62	2.66	2.68	2.58	2.63	2.66	2.68	2.61	2.64	2.67	2.68
	LDB	44.2	47.5	52.0	58.0	45.5	48.9	53.5	59.5	48.1	50.7	55.6	61.4
	LWB	40.5	46.0	51.1	57.1	41.6	47.2	52.4	58.4	43.0	48.8	54.1	60.1
105 (40.6)	TCG	25.3	27.2	30.2	32.7	26.2	27.7	30.8	33.0	27.4	28.4	31.5	33.4
	SHG	25.3	23.0	20.1	16.5	26.2	24.1	21.0	16.8	27.4	25.7	22.2	17.4
	TC	25.1	27.0	30.0	32.6	26.0	27.5	30.6	32.8	27.2	28.2	31.4	33.2
	kW	3.20	3.24	3.32	3.34	3.22	3.25	3.32	3.34	3.25	3.28	3.33	3.35
	CMP	2.88	2.92	2.99	3.02	2.89	2.93	3.00	3.02	2.92	2.95	3.00	3.02
	LDB	45.4	48.8	53.1	58.4	47.2	50.1	54.3	59.8	49.7	51.7	55.9	61.5
	LWB	41.6	47.1	52.1	57.6	42.5	48.2	53.3	58.9	43.7	49.7	54.7	60.5
115 (46.1)	TCG	23.9	25.3	28.2	31.2	24.7	25.8	28.7	31.5	25.8	26.3	29.4	31.9
	SHG	23.9	22.1	19.3	16.1	24.7	23.2	20.1	16.5	25.8	24.9	21.3	17.0
	TC	23.7	25.1	28.0	31.0	24.5	25.6	28.5	31.3	25.6	26.1	29.2	31.7
	kW	3.54	3.57	3.66	3.70	3.56	3.59	3.67	3.71	3.59	3.60	3.68	3.71
	CMP	3.21	3.25	3.33	3.38	3.23	3.26	3.34	3.38	3.26	3.27	3.36	3.39
	LDB	47.4	50.1	54.3	59.0	49.1	51.2	55.4	60.3	51.4	52.6	56.9	62.0
	LWB	42.6	48.3	53.2	58.4	43.5	49.3	54.3	59.6	44.6	50.7	55.7	61.0
125 (51.7)	TCG	22.2	23.0	26.0	29.3	23.0	23.5	26.5	29.6	24.0	24.2	27.0	30.0
	SHG	22.2	21.1	18.2	15.3	23.0	22.2	19.1	15.8	24.0	23.7	20.3	16.4
	TC	22.0	22.8	25.8	29.1	22.8	23.3	26.3	29.4	23.9	24.0	26.8	29.8
	kW	3.91	3.93	4.01	4.09	3.93	3.94	4.03	4.09	3.96	3.96	4.05	4.10
	CMP	3.58	3.60	3.69	3.76	3.60	3.61	3.71	3.76	3.63	3.64	3.72	3.77
	LDB	49.6	51.3	55.6	59.9	51.2	52.4	56.6	61.1	53.4	53.9	57.9	62.6
	LWB	43.7	49.7	54.5	59.4	44.5	50.6	55.4	60.5	45.5	51.7	56.7	61.8

Rating condition

LEGEND
BF – Bypass Factor
CMP – Compressor
Edb – Entering Dry Bulb
Ewb – Entering Wet Bulb
kW – Total Power
LDB – Leaving Dry Bulb
LWB – Leaving Wet Bulb
SHG – Gross Sensible Capacity (1000 Btu/hour)
TC – Total Net Cooling Capacity (1000 Btu/hour)
TCG – Gross Cooling Capacity (1000 Btu/hour)

NOTES:
1. Direct interpolation is permissible. Do not extrapolate.
2. The SHG is based on 80°F (26.67°C) edb temperature of air entering indoor coil.
   Below 80°F (26.67°C) edb, subtract (corr factor x cfm) from SHG.
   Above 80°F (26.67°C) edb, add (corr factor x cfm) to SHG.
   Correction Factor = 1.10 x (1 – BF) x (edb – 80).

PERFORMANCE DATA (CONT.)

INSTANTANEOUS AND INTEGRATED HEATING RATINGS
40QNQ018 HIGH WALL WITH 38QRF018

Air Temperature Entering Indoor Unit °F (°C)	Indoor Airflow (CFM) L–M–H	Item	Air Temperature Entering Outdoor Coil °F (°C)									
			17 (–8.3)		27 (–2.8)		37 (2.8)		47 (8.3)		57 (13.9)	
			Instant. Rating	Integrated Rating	Instant. Rating	Integrated Rating	Instant. Rating	Integrated Rating	Instant. Rating	Integrated Rating	Instant. Rating	Integrated Rating
55 (12.8)	460	Cap	10.77	9.82	13.37	11.87	15.53	14.13	17.20	17.20	20.58	20.58
		kW	1.20		1.31		1.42		1.53		1.71	
	525	Cap	10.81	9.86	13.55	12.03	15.73	14.32	17.43	17.43	20.99	20.99
		kW	1.19		1.26		1.35		1.45		1.62	
	645	Cap	10.92	9.95	13.79	12.25	15.97	14.54	17.80	17.80	21.53	21.53
		kW	1.14		1.21		1.28		1.37		1.51	
60 (15.6)	460	Cap	10.54	9.61	13.14	11.67	15.27	13.89	16.92	16.92	20.21	20.21
		kW	1.25		1.37		1.46		1.60		1.72	
	525	Cap	10.64	9.70	13.32	11.83	15.50	14.11	17.17	17.17	20.63	20.63
		kW	1.23		1.32		1.43		1.52		1.70	
	645	Cap	10.74	9.79	13.56	12.04	15.77	14.35	17.53	17.53	21.19	21.19
		kW	1.20		1.26		1.34		1.44		1.58	
65 (18.3)	460	Cap	10.31	9.40	12.92	11.47	15.02	13.67	16.64	16.64	19.87	19.87
		kW	1.30		1.42		1.55		1.68		1.80	
	525	Cap	10.43	9.51	13.09	11.62	15.25	13.88	16.91	16.91	20.26	20.26
		kW	1.28		1.38		1.49		1.60		1.76	
	645	Cap	10.63	9.69	13.33	11.84	15.54	14.14	17.26	17.26	20.81	20.81
		kW	1.24		1.32		1.41		1.51		1.64	
70 (21.1)	460	Cap	10.08	9.19	12.80	11.37	14.75	13.43	16.35	16.35	19.50	19.50
		kW	1.36		1.46		1.60		1.76		1.93	
	525	Cap	10.18	9.28	12.85	11.42	14.99	13.64	16.64	16.64	19.90	19.90
		kW	1.34		1.45		1.54		1.68		1.82	
	645	Cap	10.40	9.48	13.09	11.62	15.27	13.90	17.00	17.00	20.43	20.43
		kW	1.29		1.38		1.47		1.56		1.72	
75 (23.9)	460	Cap	9.79	8.66	12.57	11.17	14.47	8.66	16.05	16.05	19.07	19.07
		kW	1.41		1.51		1.67		1.84		2.04	
	525	Cap	9.89	8.89	12.69	11.27	14.72	8.89	16.35	16.35	19.55	19.55
		kW	1.39		1.49		1.61		1.75		1.89	
	645	Cap	10.12	9.23	12.86	11.43	15.02	13.67	16.73	16.73	20.06	20.06
		kW	1.35		1.45		1.53		1.66		1.76	
80 (26.7)	460	Cap	9.47	8.64	12.29	10.91	14.20	12.92	15.64	15.64	18.75	18.75
		kW	1.47		1.57		1.73		1.98		2.09	
	525	Cap	9.58	8.74	12.47	11.07	14.44	13.14	16.05	16.05	19.19	19.19
		kW	1.45		1.54		1.66		1.89		1.99	
	645	Cap	9.82	8.66	12.70	11.28	14.76	13.43	16.48	16.48	19.72	19.72
		kW	1.41		1.49		1.62		1.76		1.85	

Indicates Rating Condition (*Integrated Capacity)

Indicates Integrated Rating

Cap – Heating Capacity (100 Btuh), Includes indoor fan motor heat

kW – Total Power Input, includes compressor motor power input, outdoor fan motor power input, and indoor fan motor power input

Note: Integrated Capacity is maximum (instantaneous) capacity less the effect of frost on the outdoor coil and the heat to defrost it.

PERFORMANCE DATA (CONT.)

INSTANTANEOUS AND INTEGRATED HEATING RATINGS
40QNQ024 HIGH WALL 38QRF024

Air Temperature Entering Indoor Unit °F (°C)	Indoor Airflow (CFM) L–M–H	Item	Air Temperature Entering Outdoor Coil °F (°C)									
			17 (–8.3)		27 (–2.8)		37 (2.8)		47 (8.3)		57 (13.9)	
			Instant. Rating	Integrated Rating	Instant. Rating	Integrated Rating	Instant. Rating	Integrated Rating	Instant. Rating	Integrated Rating	Instant. Rating	Integrated Rating
55 (12.8)	460	Cap	13.68	12.48	16.49	14.64	19.01	17.30	22.17	22.17	25.24	25.24
		kW	1.56		1.69		1.87		2.07		2.30	
	525	Cap	13.81	12.59	16.65	14.79	19.25	17.52	22.44	22.44	25.66	25.66
		kW	1.53		1.64		1.79		1.96		2.21	
	645	Cap	14.01	12.77	16.85	14.97	19.53	17.78	22.86	22.86	26.24	26.24
		kW	1.48		1.59		1.69		1.83		2.03	
60 (15.6)	460	Cap	13.40	12.22	16.22	14.41	18.68	17.00	21.80	21.80	24.72	24.72
		kW	1.63		1.76		1.97		2.19		2.37	
	525	Cap	13.56	12.36	16.33	14.51	18.99	17.28	22.17	22.17	25.28	25.28
		kW	1.60		1.73		1.89		2.07		2.31	
	645	Cap	13.78	12.57	16.59	14.74	19.31	17.57	22.54	22.54	25.88	25.88
		kW	1.54		1.66		1.77		1.93		2.13	
65 (18.3)	460	Cap	13.08	11.93	15.98	14.19	18.45	16.79	21.49	21.49	24.27	24.27
		kW	1.71		1.82		2.05		2.28		2.53	
	525	Cap	13.26	12.09	16.11	14.31	18.69	17.01	21.88	21.88	24.81	24.81
		kW	1.67		1.79		1.98		2.19		2.36	
	645	Cap	13.52	12.33	16.32	14.50	19.04	17.32	22.29	22.29	25.51	25.51
		kW	1.61		1.73		1.86		2.03		2.26	
70 (21.1)	460	Cap	12.74	11.61	15.72	13.96	18.19	16.55	21.10	21.10	23.60	23.60
		kW	1.78		1.88		2.13		2.37		2.74	
	525	Cap	12.93	11.79	15.86	14.09	18.37	16.72	21.55	21.55	24.31	24.31
		kW	1.75		1.85		2.09		2.29		2.55	
	645	Cap	13.21	12.04	16.09	14.29	18.75	17.06	22.01	22.01	25.02	25.02
		kW	1.68		1.79		1.96		2.15		2.35	
75 (23.9)	460	Cap	12.37	8.66	15.42	13.70	17.91	8.66	20.76	20.76	23.64	23.64
		kW	1.85		1.95		2.20		2.46		2.82	
	525	Cap	12.56	8.89	15.58	13.84	18.04	8.89	21.40	21.40	23.74	23.74
		kW	1.82		1.91		2.17		2.35		2.71	
	645	Cap	12.86	11.72	15.84	14.07	18.42	16.76	21.71	21.71	24.63	24.63
		kW	1.76		1.86		2.05		2.22		2.50	
80 (26.7)	460	Cap	11.97	10.91	15.04	13.36	17.59	16.01	20.43	20.43	23.10	23.10
		kW	1.93		2.03		2.26		2.58		2.69	
	525	Cap	12.16	11.09	15.28	13.57	17.75	16.16	21.00	21.00	23.41	23.41
		kW	1.89		1.98		2.24		2.50		2.61	
	645	Cap	12.47	8.66	15.56	13.82	18.13	16.50	21.57	21.57	24.21	24.21
		kW	1.84		1.92		2.15		2.35		2.50	

Indicates Rating Condition (*Integrated Capacity)

Indicates Integrated Rating

Cap – Heating Capacity (100 Btuh), Includes indoor fan motor heat

kW – Total Power Input, includes compressor motor power input, outdoor fan motor power input, and indoor fan motor power input

Note: Integrated Capacity is maximum (instantaneous) capacity less the effect of frost on the outdoor coil and the heat to defrost it.

PERFORMANCE DATA (CONT.)

INSTANTANEOUS AND INTEGRATED HEATING RATINGS
40QNQ030 WITH 38QRF030

Air Temperature Entering Indoor Unit °F (°C)	Indoor Airflow (CFM) L–M–H	Item	Air Temperature Entering Outdoor Coil °F (°C)									
			17 (–8.3)		27 (–2.8)		37 (2.8)		47 (8.3)		57 (13.9)	
			Instant. Rating	Integrated Rating	Instant. Rating	Integrated Rating	Instant. Rating	Integrated Rating	Instant. Rating	Integrated Rating	Instant. Rating	Integrated Rating
55 (12.8)	600	Cap	16.73	15.25	20.62	18.31	23.99	21.83	28.76	28.76	32.29	32.29
		kW	1.95		2.11		2.23		2.47		2.57	
	700	Cap	16.92	15.43	20.89	18.55	24.30	22.11	29.09	29.09	32.90	32.90
		kW	1.88		2.03		2.13		2.34		2.43	
	830	Cap	17.18	15.67	21.07	18.71	24.57	22.36	29.48	29.48	33.42	33.42
		kW	1.82		1.96		2.04		2.24		2.31	
60 (15.6)	600	Cap	16.44	14.99	20.24	17.98	23.62	21.49	28.26	28.26	31.88	31.88
		kW	2.03		2.23		2.36		2.56		2.68	
	700	Cap	16.61	15.14	20.61	18.30	23.94	21.79	28.67	28.67	32.41	32.41
		kW	1.98		2.13		2.26		2.45		2.55	
	830	Cap	16.81	15.33	20.82	18.49	24.22	22.04	29.06	29.06	32.90	32.90
		kW	1.94		2.03		2.16		2.35		2.43	
65 (18.3)	600	Cap	16.20	14.77	19.92	17.69	23.25	21.16	27.86	27.86	31.39	31.39
		kW	2.09		2.32		2.47		2.68		2.80	
	700	Cap	16.40	14.95	20.24	17.97	23.56	21.44	28.26	28.26	31.90	31.90
		kW	2.04		2.22		2.37		2.57		2.67	
	830	Cap	16.48	15.02	20.38	18.10	23.85	21.70	28.64	28.64	32.43	32.43
		kW	2.02		2.20		2.27		2.47		2.55	
70 (21.1)	600	Cap	15.75	14.36	19.59	17.40	22.97	20.90	27.47	27.47	30.89	30.89
		kW	2.20		2.40		2.60		2.81		2.93	
	700	Cap	15.91	14.50	19.89	17.66	23.18	21.10	27.88	27.88	31.40	31.40
		kW	2.16		2.29		2.49		2.70		2.80	
	830	Cap	16.29	14.85	20.11	17.86	23.51	21.39	28.21	28.21	31.89	31.89
		kW	2.07		2.23		2.39		2.58		2.66	
75 (23.9)	600	Cap	15.39	8.66	19.23	17.08	22.43	8.66	27.05	27.05	30.40	30.40
		kW	2.28		2.48		2.74		2.94		3.06	
	700	Cap	15.63	8.89	19.49	17.31	22.86	8.89	27.47	27.47	30.94	30.94
		kW	2.23		2.40		2.64		2.84		2.93	
	830	Cap	15.86	14.46	19.81	17.59	23.20	21.11	27.83	27.83	31.41	31.41
		kW	2.17		2.32		2.48		2.72		2.79	
80 (26.7)	600	Cap	14.94	13.63	18.91	16.80	22.00	20.02	26.57	26.57	29.91	29.91
		kW	2.36		2.56		2.85		3.09		3.20	
	700	Cap	15.25	13.90	19.12	16.98	22.52	20.50	27.01	27.01	30.44	30.44
		kW	2.31		2.52		2.69		2.98		3.07	
	830	Cap	15.53	8.66	19.36	17.19	22.79	20.74	27.42	27.42	30.94	30.94
		kW	2.25		2.45		2.59		2.85		2.93	

Indicates Rating Condition (*Integrated Capacity)

Indicates Integrated Rating

Cap – Heating Capacity (100 Btuh), Includes indoor fan motor heat

kW – Total Power Input, includes compressor motor power input, outdoor fan motor power input, and indoor fan motor power input

Note: Integrated Capacity is maximum (instantaneous) capacity less the effect of frost on the outdoor coil and the heat to defrost it.

PERFORMANCE DATA (CONT.)

INSTANTANEOUS AND INTEGRATED HEATING RATINGS
40QNQ036 WITH 388QRF036

Air Temperature Entering Indoor Unit °F (°C)	Indoor Airflow (CFM) L–M–H	Item	Air Temperature Entering Outdoor Coil °F (°C)									
			17 (–8.3)		27 (–2.8)		37 (2.8)		47 (8.3)		57 (13.9)	
			Instant. Rating	Integrated Rating	Instant. Rating	Integrated Rating	Instant. Rating	Integrated Rating	Instant. Rating	Integrated Rating	Instant. Rating	Integrated Rating
55 (12.8)	620	Cap	22.09	20.14	26.45	23.49	30.71	27.95	35.71	35.71	40.41	40.41
		kW	2.62		2.89		3.14		3.46		3.77	
	775	Cap	22.74	20.73	27.06	24.04	31.31	28.49	36.46	36.46	41.74	41.74
		kW	2.48		2.73		2.94		3.21		3.49	
	930	Cap	23.03	21.00	27.43	24.36	31.66	28.81	37.00	37.00	42.46	42.46
		kW	2.39		2.62		2.80		3.04		3.29	
60 (15.6)	620	Cap	21.64	19.73	26.10	23.18	30.24	27.52	35.20	35.20	39.89	39.89
		kW	2.73		3.00		3.26		3.60		3.90	
	775	Cap	22.22	20.26	26.69	23.71	30.89	28.11	35.99	35.99	40.98	40.98
		kW	2.60		2.85		3.07		3.35		3.62	
	930	Cap	22.59	20.59	27.05	24.02	31.30	28.49	36.54	36.54	41.93	41.93
		kW	2.51		2.74		2.93		3.18		3.43	
65 (18.3)	620	Cap	21.23	19.36	25.63	22.76	29.81	27.13	34.78	34.78	39.36	39.36
		kW	2.82		3.12		3.39		3.75		4.05	
	775	Cap	21.71	19.79	26.28	23.34	30.48	27.74	35.55	35.55	40.46	40.46
		kW	2.72		2.97		3.20		3.50		3.77	
	930	Cap	22.11	20.16	26.65	23.67	30.87	28.10	36.07	36.07	41.17	41.17
		kW	2.63		2.86		3.07		3.33		3.56	
70 (21.1)	620	Cap	20.72	18.89	25.12	22.31	29.35	26.71	34.29	34.29	38.79	38.79
		kW	2.92		3.26		3.52		3.88		4.20	
	775	Cap	21.15	19.28	25.84	22.95	30.07	27.36	35.20	35.20	39.91	39.91
		kW	2.84		3.09		3.34		3.66		3.92	
	930	Cap	21.59	19.69	26.21	23.28	30.46	27.72	35.61	35.61	40.61	40.61
		kW	2.75		2.99		3.20		3.48		3.72	
75 (23.9)	620	Cap	20.18	8.66	24.63	21.87	28.83	8.66	33.81	33.81	38.21	38.21
		kW	3.03		3.37		3.64		4.03		4.35	
	775	Cap	20.64	8.89	25.31	22.48	29.61	8.89	34.74	34.74	39.34	39.34
		kW	2.94		3.23		3.47		3.81		4.08	
	930	Cap	20.99	19.14	25.75	22.87	30.06	27.35	35.25	35.25	40.06	40.06
		kW	2.87		3.11		3.34		3.64		3.88	
80 (26.7)	620	Cap	19.61	17.88	24.11	21.41	28.39	25.83	33.32	33.32	37.62	37.62
		kW	3.13		3.50		3.78		4.18		4.49	
	775	Cap	20.12	18.34	24.74	21.97	29.14	26.52	34.26	34.26	38.75	38.75
		kW	3.04		3.37		3.60		3.96		4.24	
	930	Cap	20.49	8.66	25.21	22.39	29.59	26.93	34.78	34.78	39.48	39.48
		kW	2.97		3.25		3.47		3.79		4.04	

Indicates Rating Condition (*Integrated Capacity)

Indicates Integrated Rating

Cap – Heating Capacity (100 Btuh), Includes indoor fan motor heat

kW – Total Power Input, includes compressor motor power input, outdoor fan motor power input, and indoor fan motor power input

Note: Integrated Capacity is maximum (instantaneous) capacity less the effect of frost on the outdoor coil and the heat to defrost it.

APPLICATION DATA

UNIT SELECTION

The horizontal units are available as cooling only and heat pumps.

For most applications, the cooling load dictates the size selection. Select equipment to either match or be slightly less than anticipated peak load. This provides better humidity control, fewer unit cycles, and better low load performance.

For units used in spaces with high sensible loads, base equipment selection on unit sensible load, not on total anticipated load to avoid oversizing the equipment.

UNIT MOUNTING (INDOOR)

Unit leveling - For reliable operation, units should be level in all planes.

Clearance - Provide adequate clearance for airflow. (See Fig. 9)

Unit location - Select a location which will provide the best air circulation for the room.

These units should be positioned as high as possible on the wall for best air circulation. The unit return and discharge should not be obstructed by furniture, curtains, or anything which may cause unit short cycling or air recirculation. Place the unit in the middle of the selected wall (if possible). Use an outside wall, if available, to make piping easier, and place the unit so it faces the normal location of room occupants.

Support - The wall must provide adequate support for the weight of the fan coil. Refer to the Physical Data section for fan coil weights.

Mounting Template - The fan coil units are furnished with mounting templates to mark the hole locations for wiring and refrigerant lines.

UNIT MOUNTING (OUTDOOR)

Unit leveling - For reliable operation, units should be level in all planes.

Clearance - Minimum clearance, as shown in Fig. 10, must be provided for airflow. The condensing units are designed for free-blow application. Air inlets and outlets should not be restricted.

Unit location - A location which is convenient to installation and not exposed to strong wind. If unit is exposed to strong winds it is recommended that a wind baffle accessory be used.

A location which can bear the weight of outdoor unit and where the outdoor unit can be mounted in a level position.

Mounting Pad - The minimum mounting pad dimensions are listed in the following table:

UNIT MODEL	MAXIMUM MOUNTING PAD DIMENSIONS ft–in. (mm)
38HDF018, 024, 030 38QRF018, 024	1'–11" X 3'–6" (584.2 X 1066.8)
38HDF036 38QRF030, 036	2'–0" X 4'–2" (609.6 X 1270)

SYSTEMS OPERATING CONDITIONS

Cooling Operating Range

	Maximum		Minimum	
	DB °F (°C)	WB °F (°C)	DB °F (°C)	WB °F (°C)
Outdoor Unit	125 (51.7)	– –	55 (12.8)	– –
Indoor Unit	90 (32.2)	74 (23.3)	62 (17.0)	56 (13)

Heating Operating Range

	Maximum		Minimum	
	DB °F (°C)	WB °F (°C)	DB °F (°C)	WB °F (°C)
Outdoor Unit	75 (23.9)	67 (19.4)	17 (–8.3)	– –
Indoor Unit	81 (27.2)	– –	62 (17.0)	– –

Low Ambient Operation

Both cooling only and heat pumps will operate in cooling down to 55°F (12.8°C).

When equipped with a Low Ambient Controller, the unit will operate down to -20°F (-28.9°C).

For proper operation of colling only units, a Winter Start Kit (bypasses the Low Pressure Switch), a Crankcase Heater (prevents refrigerant migration during compressor-off cycle), and a Wind Baffle should also be installed.

On heat pumps, a Winter Start Kit will not be required. An Isolation Relay to bypass the Low Ambient Controller when unit is in heating mode will be required.

Metering Devices

An Accurator installed at the outdoor unit is used as a metering device. This requires that both refrigerant lines must be insulated. (A heat pump unit has 2 AccuRaters.)

DRAIN CONNECTIONS

For ease of installation, the drains on the 40QNC/QNQ units can be connected form either the back-left or back-right as shown in Fig. 11.

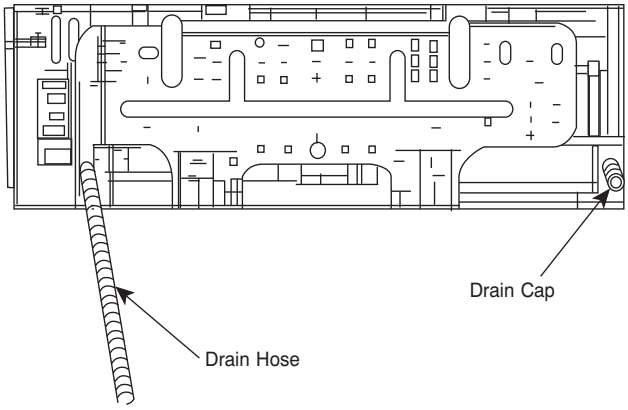

Fig. 11 – Location of Drain Hose & Cap

Install drains to meet local sanitation codes. If adequate gravity drainage cannot be provided, unit should be equipped with accessory condensate pump. See physical dimension tables for drain sizes.

NOTE: High wall fan coil units have internal condensate traps. A trap is not required.

REFRIGERANT LINES

General refrigerant line sizing:

1. Piping for indoor unit can be routed in the direction shown in Fig. 12.

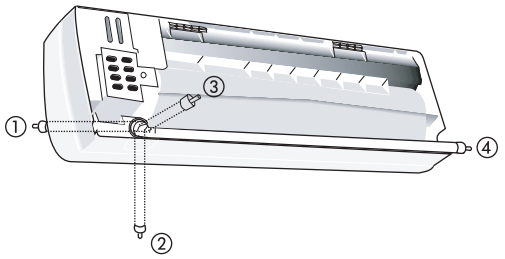

A08358A

Fig. 12 – Indoor Unit Piping Configurations

2. Refrigerant lines should not be buried in the ground. If it is necessary to bury the lines, not more than 36-in (914 mm) should be buried. Provide a minimum 6-in (152 mm) vertical rise to the service valves to prevent refrigerant migration.
3. Both lines must be insulated. Use a minimum of 1/2-in. (12.7 mm) thick insulation. Closed-cell insulation is recommended in all long-line applications.
4. Special consideration should be given to isolating interconnecting tubing from the building structure. Isolate the tubing so that vibration or noise is not transmitted into the structure.

NOTE: **Since the same outdoor unit can be matched with different types of indoor units, it may not have enough refrigerant charge. Refer to the Physical Data tables to determine if additional charge is required.**

Long Line Applications

The following table indicates the maximum line lengths that can be used with the high wall systems.

ITEM	MAX LENGTH ALLOWED ft (m)
Total Piping	200 (61)
Max Lift (Fan Coil above)	65 (20)
Max Drop (Fan Coil below)	200 (61)

For line lengths over 25 ft (7.6 m), .3 oz of charge should be added for each additional foot up to the maximum allowed.

For line lengths over 80 ft (24.4 m), certain accessories and adjustments to the piston sizes are also required.

Refer to the *Duct-Free Split Systems Long Line Guide* for additional information.

CONTROL SYSTEM

The 40QNC,QNQ unit is equipped with a microprocessor controls to operate the system and provide optimum levels of comfort and operating efficiency.

The main microprocessor is located in the control box of the fan coil unit with thermistors located in the fan coil inlet and on the indoor coil. These thermistors monitor the system operation and control the operating mode. To change the settings or the modes of operation, use the factory supplied wireless remote control or accessory wired controller or Zone Manager.

The 40QNC,QNQ unit has 5 operating modes:

- Fan Only
- Auto (heat pump models only)
- Heating (heat pump models only)
- Cooling
- Dehumidification (Dry)

FAN ONLY - In Fan Only mode, the system filters and circulates the room air without changing the room air temperature.

AUTO - In Auto mode, the system will automatically select one of the following operating modes: cooling, heating or fan only based on the difference between the room temperature and the set point temperature.

HEATING - In the Heating mode, the system heats and filters room air.

COOLING - In Cooling mode, the system cools, dries and filters room air.

DEHUMIDIFICATION (DRY) - in Dehumidification (Dry) mode, the system dries, filters and slightly cools room temperature. This mode does not take the place of a dehumidifier.

In addition to the above modes that are selected by using the remote control, The unit can run in two other modes selected by the manual button:

- EMERGENCY RUN
- TEST MODE

EMERGENCY mode - is used when the remote control is misplaced or the batteries in the remote control have expired. Pushing the manual button under the front cover will put the unit in Auto mode with a predetermined set point (73.4°F/ 23°C) .

TEST mode - is used when a technician needs to diagnose the unit for a malfunction. The unit can be set into TEST mode using the remote control. It will run regardless of the set point.

The microprocessor controls offer additional comfort and economy features like SLEEP mode, TIMER and AUTO SWEEP. Refer to the Owner's Manual for additional details on these features.

USER INTERFACE

The units come standard with a wireless remote control. The wireless remote has a range of 25 ft (8 m) when pointed toward the unit.

For some applications (commercial), a wired remote may be more desirable. A wired remote control is offered as an accessory.

For applications that have multiple units, these controls offer additional flexibility

Two Units in Same Room

If the two units are working independently, the two remotes can be configured differently so that the signal from one remote does not interfere with the operation of the other units.

Multiple Units Controlled by One Controller

When there is an application where all units require the same setting, up to 6 units can be daisy-chained and controlled by one wired remote control. Total length of connecting wire can be up to 500 ft (150 m).

Zoning

For applications that require zoning, the Zone Manager is offered as an accessory. This will allow up to 32 units to be connected in up to 8 zones. Each zone can be programmed for 7 days with each day having 4 periods.

AIRTHROW DATA

Unit Size	Air Throw Data ft (m)		
	High Speed	Medium Speed	Low Speed
018	35 (10.7)	30 (9.1)	25 (7.6)
024	35 (10.7)	30 (9.1)	25 (7.6)
030	40 (12.2)	35 (10.7)	27 (8.2)
036	50 (15.2)	40 (12.2)	30 (9.1)

SOUND RATINGS

Outdoor Units

Model Number	Sound Power dBa	Sound Pressure dBa
38HDF018−−−3	66	55
38HDF024−−−3	66	55
38HDF030−−−3	72	61
38HDF036−−−3/5/6	72	61
38QRF018−−−3	66	55
38QRF024−−−3	66	55
38QRF030−−−3	72	61
38QRF036−−−3/5/6	72	61

Indoor Units

Model Number	High		Medium		Low	
	Sound Power dBa	Sound Pressure dBa	Sound Power dBa	Sound Pressure dBa	Sound Power dBa	Sound Pressure dBa
40QNC01824−−−3	59	48	53	42	49	38
40QNC030−−−3	60	49	57	46	53	5
40QNC036−−−3	62	51	60	49	57	46
40QNQ018−−−3	59/60 (Clg/Htg)	48/49 (Clg/Htg)	53/54 (Clg/Htg)	42/43 (Clg/Htg)	49/50 (Clg/Htg)	38/39 (Clg/Htg)
40QNQ024−−−3	59/60 (Clg/Htg)	48/49 (Clg/Htg)	53/54 (Clg/Htg)	42/43 (Clg/Htg)	49/50 (Clg/Htg)	38/39 (Clg/Htg)
40QNQ030−−−3	60/61(Clg/Htg)	49/50 (Clg/Htg)	57/58 (Clg/Htg)	46/47 (Clg/Htg)	53/55 (Clg/Htg)	42/44 (Clg/Htg)
40QNQ036−−−3	62/63 (Clg/Htg)	51/52 (Clg/Htg)	60/61 (Clg/Htg)	49/50 (Clg/Htg)	57/58 (Clg/Htg)	46/47 (Clg/Htg)

NOTES:
1. Sound power ratings are tested in accordance with ARI standard 270−−−95 (not listed in ARI) and ARI 350.
2. Sound pressure ratings are estimated sound pressure, 3 feet (.91 m) from the unit, based on sound power data.

WIRING

The indoor and outdoor units have their own power supply. Low voltage control wires run between the indoor and outdoor units. Two wires are required for cooling only systems and seven wires are required for heat pumps.

ELECTRICAL DATA

38HDF/38QRF ELECTRICAL DATA

38HDF/38QRF UNIT SIZE	V−PH−Hz	VOLTAGE RANGE*		COMPRESSOR		OUTDOOR FAN MOTOR			MIN CKT AMPS	FUSE/ CKT BKR AMPS
		Min	Max	RLA	LRA	FLA	NEC Hp	kW Out		
018	208/230−1−60	187	253	9.0	48.0	0.80	0.125	0.09	12.1	20
024	208/230−1−60	187	253	12.8	58.3	0.80	0.125	0.09	16.8	25
030	208/230−1−60	187	253	14.1	73.0	1.50	0.25	0.19	18.4	30
036	208/230−1−60	187	253	17.9	112.0	1.45	0.25	0.19	23.8	40
	208/230−3−60	187	253	13.2	88.0	1.45	0.25	0.19	18.0	30
	460−3−60	414	506	6.0	44.0	0.80	0.25	0.19	8.3	15

40QNC, QNQ FAN COIL ELECTRICAL DATA

UNIT SIZE	V−PH−Hz	VOLTAGE RANGE*		FAN		POWER	
		Min	Max	FLA	Motor Power (Watts)	MIN CKT AMPS	FUSE/CKT BKR AMPS
40QNC01824	208/230−1−60	187	253	0.38	64	0.48	15
40QNC030	208/230−1−60	187	253	0.38	74	0.48	15
40QNC036	208/230−1−60	187	253	0.44	74	0.55	15
40QNQ018	208/230−1−60	187	253	0.38	64	0.48	15
40QNQ024	208/230−1−60	187	253	0.38	64	0.48	15
40QNQ030	208/230−1−60	187	253	0.38	74	0.48	15
40QNQ036	208/230−1−60	187	253	0.44	74	0.55	15

*Permissible limits of the voltage range at which unit will operate satisfactorily.

LEGEND

FLA – Full Load Amps
MCA – Minimum Circuit Amps per NEC Section 430−24
NEC – National Electrical Code
RLA – Rated Load Amps (Compressor)

NOTES:
1. In compliance with NEC requirements for multi−motor and combination load equipment (refer to NEC Articles 430 and 440), the overcurrent protective device for the unit shall be fuse or equipped with a breaker.
2. Motor RLA values are established in accordance with UL (Underwriters Laboratories) Standard 465.

C US

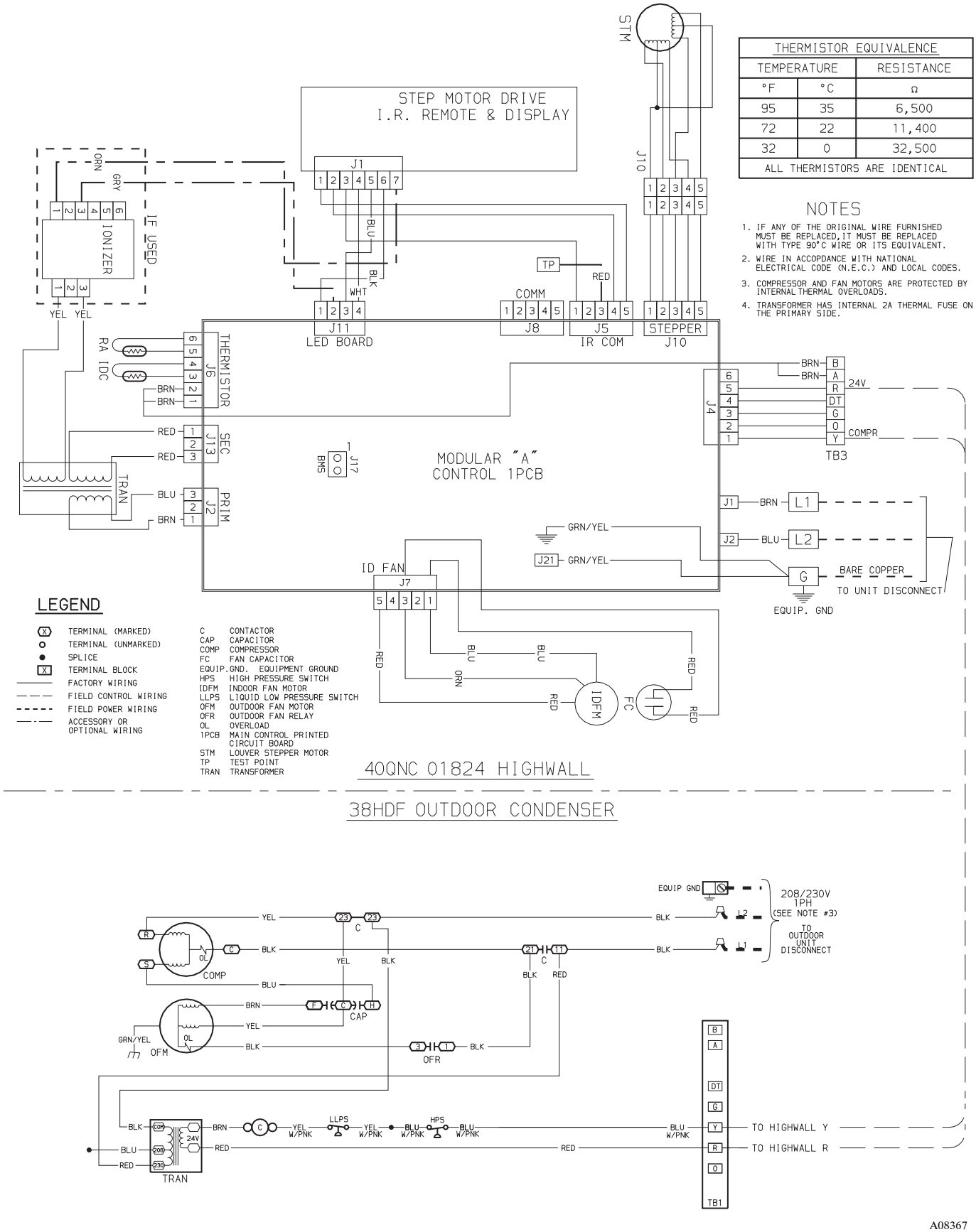

THERMISTOR EQUIVALENCE		
TEMPERATURE		RESISTANCE
°F	°C	Ω
95	35	6,500
72	22	11,400
32	0	32,500
ALL THERMISTORS ARE IDENTICAL		

NOTES

1. IF ANY OF THE ORIGINAL WIRE FURNISHED MUST BE REPLACED, IT MUST BE REPLACED WITH TYPE 90°C WIRE OR ITS EQUIVALENT.
2. WIRE IN ACCOPDANCE WITH NATIONAL ELECTRICAL CODE (N.E.C.) AND LOCAL CODES.
3. COMPRESSOR AND FAN MOTORS ARE PROTECTED BY INTERNAL THERMAL OVERLOADS.
4. TRANSFORMER HAS INTERNAL 2A THERMAL FUSE ON THE PRIMARY SIDE.

Fig. 13 – 40QNC01824 Matched with 38HDF Typical Wiring Schematic

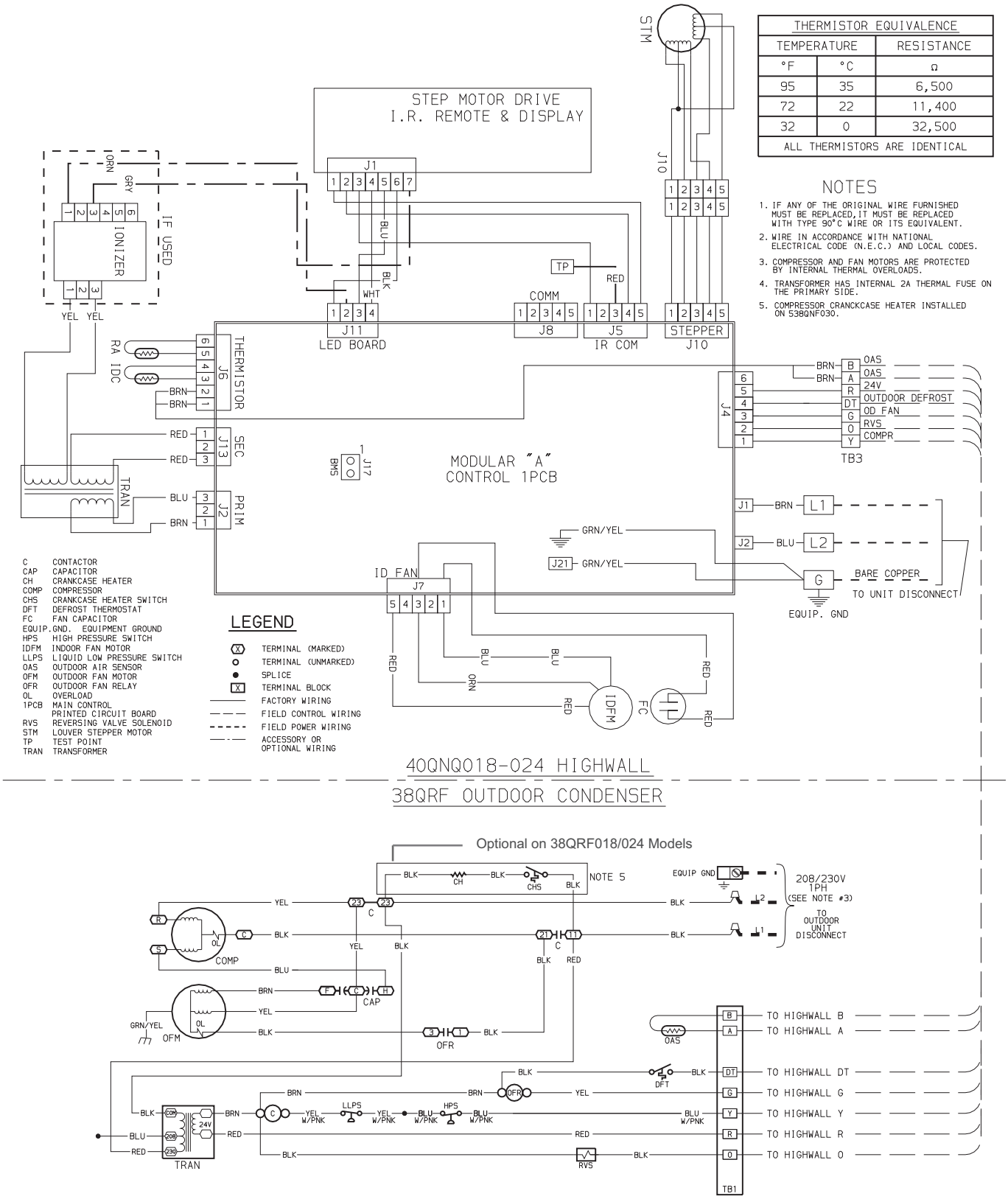

THERMISTOR EQUIVALENCE		
TEMPERATURE		RESISTANCE
°F	°C	Ω
95	35	6,500
72	22	11,400
32	0	32,500
ALL THERMISTORS ARE IDENTICAL		

NOTES

1. IF ANY OF THE ORIGINAL WIRE FURNISHED MUST BE REPLACED,IT MUST BE REPLACED WITH TYPE 90°C WIRE OR ITS EQUIVALENT.
2. WIRE IN ACCORDANCE WITH NATIONAL ELECTRICAL CODE (N.E.C.) AND LOCAL CODES.
3. COMPRESSOR AND FAN MOTORS ARE PROTECTED BY INTERNAL THERMAL OVERLOADS.
4. TRANSFORMER HAS INTERNAL 2A THERMAL FUSE ON THE PRIMARY SIDE.
5. COMPRESSOR CRANCKCASE HEATER INSTALLED ON 538QNF030.

Fig. 14 – 40QNQ018,024 Matched with 38QRF Typical Wiring Schematic

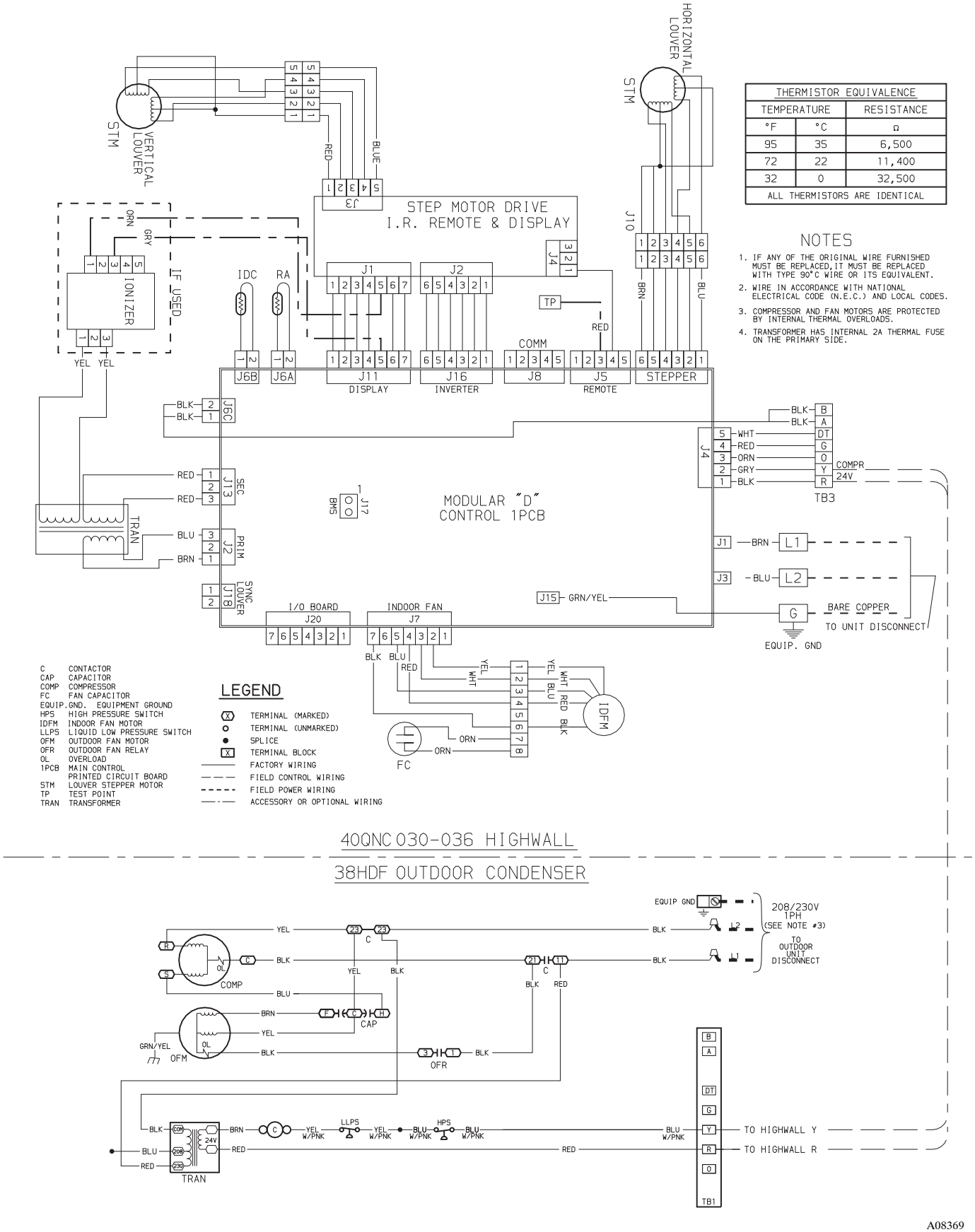

Fig. 15 – 40QNC030,036 Matched with 38HDF Typical Wiring Schematic

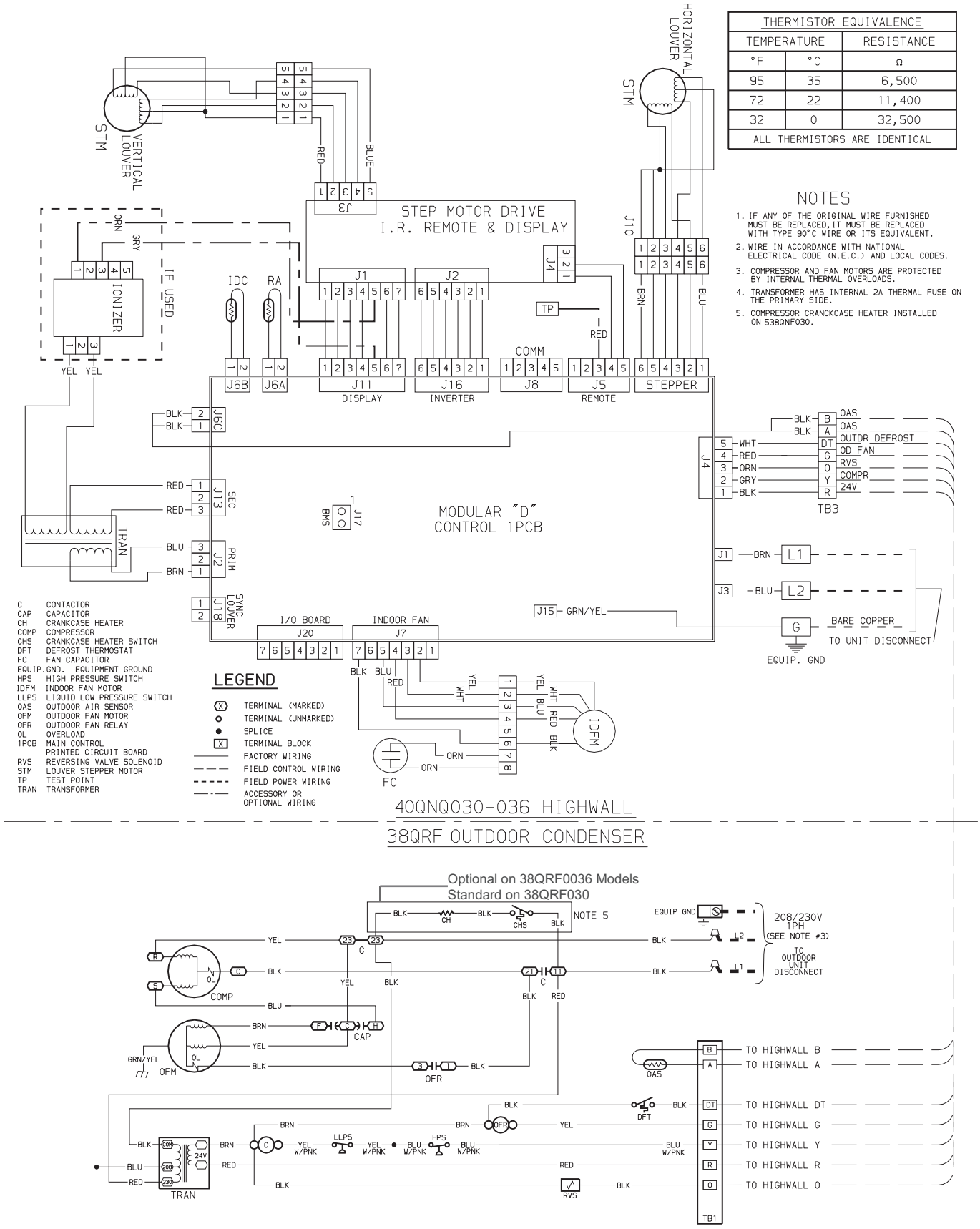

THERMISTOR EQUIVALENCE		
TEMPERATURE		RESISTANCE
°F	°C	Ω
95	35	6,500
72	22	11,400
32	0	32,500
ALL THERMISTORS ARE IDENTICAL		

NOTES

1. IF ANY OF THE ORIGINAL WIRE FURNISHED MUST BE REPLACED, IT MUST BE REPLACED WITH TYPE 90°C WIRE OR ITS EQUIVALENT.
2. WIRE IN ACCORDANCE WITH NATIONAL ELECTRICAL CODE (N.E.C.) AND LOCAL CODES.
3. COMPRESSOR AND FAN MOTORS ARE PROTECTED BY INTERNAL THERMAL OVERLOADS.
4. TRANSFORMER HAS INTERNAL 2A THERMAL FUSE ON THE PRIMARY SIDE.
5. COMPRESSOR CRANCKCASE HEATER INSTALLED ON 538QNF030.

Fig. 16 – 40QNQ030,036 Matched with 38QRF Typical Wiring Schematic

GUIDE SPECIFICATIONS

INDOOR WALL-MOUNTED DUCT-FREE UNITS

Carrier Model Number: 40QNC/40QNQ

Size Range: 1-1/2 to 3 Ton Nominal Cooling Capacity /1-1/2 to 3 Ton Nominal Heating Capacity

PART 1 - GENERAL

1.01 System Description

Indoor, wall-mounted, direct-expansion fan coils are matched with cooling only or heat pump outdoor unit .

1.02 Agency Listings

Unit shall be rated per ARI Standards 210/240 and listed in the ARI directory as a matched system. Units shall be certified by UL and CSA.

1.03 Delivery, Storage, And Handling

Units shall be stored and handled per unit manufacturer's recommendations.

1.04 Warranty

1-year parts limited warranty.

PART 2 - PRODUCTS

2.01 Equipment

A. General:

Indoor, direct-expansion, wall-mounted fan coil. Unit shall be complete with cooling/heating (heat pump systems only) coil, fan, fan motor, piping connectors, electrical controls, microprocessor control system, and integral temperature sensing. Unit shall be furnished with integral wall mounting bracket and mounting hardware.

B. Unit Cabinet:

Cabinet discharge and inlet grilles shall be attractively styled, high-impact polystyrene. Cabinet shall be fully insulated for improved thermal and acoustic performance.

C. Fans:

1. Fan shall be tangential direct-drive blower type with air intake at the top of the unit and discharge at the bottom front. Automatic, motor-driven vertical air sweep shall be provided standard. Automatic motor-driven horizontal air sweep shall be provided standard on sizes 030 and 036.
2. Air sweep operation shall be user selectable. The vertical sweep may be adjusted (using the remote control) and the horizontal air direction may be set manually on unit sizes 018 and 024.

D. Coil:

Coil shall be copper tube with aluminum fins and galvanized steel tube sheets. Fins shall be bonded to the tubes by mechanical expansion and specially coated for enhanced wetability. A drip pan under the coil shall have two drain connections for hose attachment, on either the left or right-hand side, to remove condensate. Condensate pan shall have internal trap.

E. Motors:

Motors shall be open drip-proof, permanently lubricated ball bearing with inherent overload protection. Fan motors shall be 3-speed.

F. Controls:

Controls shall consist of a microprocessor-based control system which shall control space temperature, determine optimum fan speed, and run self diagnostics. the temperature control range shall be from 62°F to 84°F (16.67°C to 28.89°C).

User interface with the unit shall be accomplished through the standard wireless remote control (can be configured for °F or °C) or an optional wired controller or Zone Manager.

The unit shall have the following functions as a minimum:

1. An automatic restart after power failure at the same operating conditions as at failure.
2. A timer function to provide a minimum 24-hour timer cycle for system Auto Start/Stop.
3. Temperature-sensing controls shall sense return air temperature.
4. Indoor coil freeze protection.
5. Automatic vertical air sweep control to provide on or off activation of air sweep louvers. Automatic horizontal air sweep is available on sizes 030 and 036.
6. Dehumidification mode shall provide increased latent removal capability by modulating system operation and set point temperature.
7. Fan-only operation to provide room air circulation when no cooling is required.
8. Diagnostics shall provide continuous checks of unit operation and warn of possible malfunctions. Error messages shall be displayed at the unit.
9. Fan speed control shall be user-selectable: high, medium, low, or microprocessor controlled automatic operation during all operating modes.
10. Automatic heating-to-cooling changeover in heat pump mode. Control shall include deadband to prevent rapid mode cycling between heating and cooling.

G. Filters:

Unit shall have filter track with factory-supplied cleanable filters.

H. Electrical Requirements:

Indoor units shall be 208/230-1-60 and require their own power supply. Only control wiring shall run between the indoor and outdoor units.

I. Operating Characteristics:

The 40QNC/QNQ, when matched with the appropriate outdoor section, shall have a minimum listed SEER (seasonal energy efficiency ratio) of 13 at ARI conditions, and a minimum HSPF of 7.7.

J. Refrigerant Lines:

All units should have refrigerant lines that can be oriented to connect from the left, right or back of unit. Both refrigerant lines need to be insulated.

K. Special Features (Field Installed):

1. Condensate Pump:
   - The condensate pump shall remove condensate from the drain pan when gravity drainage cannot be used. Pump shall be designed for quiet operation. Pump shall consist of two parts: an internal reservoir/sensor assembly, and a remote sound-shielded pump assembly. A liquid level sensor in the reservoir shall stop cooling operation if the liquid level in the reservoir is unacceptable.
2. Wired Control:
   - The wired control can replace the standard wireless control and provide the User Interface to control one unit or up to 6 units daisy-chained together.
3. Zone Control:
   - The Zone Control can provide the capability of connecting up to 32 units into one or up to 8 independent zones. Each zone can be programmed for 7 days with each day having up to 4 periods.

GUIDE SPECIFICATIONS
HORIZ. DISCHARGE OUTDOOR UNITS

Carrier Model Number: 38HDF/38QRF
Size Range: 1-1/2 to 3 Ton Nominal Cooling Capacity /1-1/2 to 3 Ton Nominal Heating Capacity

PART 1 - GENERAL
1.01 System Description

A. Outdoor air-cooled split system compressor sections suitable for on-the-ground, rooftop, wall hung or balcony mounting. Units shall consist of a scroll compressor, an air-cooled coil, propeller-type blow-through outdoor fan, reversing valve (HP), accumulator, Accurator metering device(s), and control box. Units shall discharge air horizontally as shown on the contract drawings. Units shall function as the outdoor component of an air-to-air cooling only, or heat pump system.

B. Units shall be used in a refrigeration circuit matched to duct-free cooling only or heat pump fan coil units.

1.02 Agency Listings

A. Unit construction shall comply with ANSI/ASHRAE 15, latest revision, and with the NEC.

B. Units shall be evaluated in accordance with UL standard 1995.

C. Units shall be listed in the CEC directory.

D. Unit cabinet shall be capable of withstanding 500-hour salt spray test per Federal Test Standard No. 141 (method 6061).

E. Air-cooled condenser coils shall be leak tested at 573 psig.

1.03 Delivery, Storage, And Handling

Units shall be shipped in one piece and shall be stored and handled per unit manufacturer's recommendations.

1.04 Warranty

1-year parts, 5-year compressor limited warranty.

PART 2 - PRODUCTS
2.01 Equipment

A. General:

Factory assembled, single piece, air-cooled outdoor unit. Contained within the unit enclosure shall be all factory wiring, piping, controls, and the compressor.

B. Unit Cabinet:

1. Unit cabinet shall be constructed of galvanized steel, bonderized and coated with a baked-enamel finish on inside and outside.
2. Unit access panels shall be removable with minimal screws and shall provide full access to the compressor, fan, and control components.
3. Outdoor compartment shall be isolated and have an acoustic lining to assure quiet operation.
4. Compressor compartment shall be isolated to allow performing diagnostics while the system is running.

C. Fans:

1. Outdoor fans shall be direct-drive propeller type, and shall discharge air horizontally. Fans shall blow air through the outdoor coil.
2. Outdoor fan motors shall be totally-enclosed, single phase motors with class B insulation and permanently-lubricated bearings. Motor shall be protected by internal thermal overload protection.
3. Shaft shall have inherent corrosion resistance.
4. Fan blades shall be metallic and shall be statically and dynamically balanced.
5. Outdoor fan openings shall be equipped with PVC coated metal protective grille over fan.

D. Compressor:

1. Compressor shall be fully hermetic scroll type.
2. Compressor shall be equipped with oil system, operating oil charge, and motor. Internal overloads shall protect the compressor from over-temperature and over-current.
3. Motor shall be NEMA rated class F, suitable for operation in a refrigerant atmosphere.
4. Compressor assembly shall be installed on rubber vibration isolators.
5. Compressors shall be available in single-phase (sizes 018-036) and three-phase (size 036).

E. Outdoor Coil:

Coil shall be constructed of aluminum fins mechanically bonded to seamless copper tubes, which are cleaned, dehydrated, and sealed.

F. Refrigeration Components:

Refrigerant circuit components shall include brass external liquid line service valve with service gage port connections, suction line service valve with service gage connection port, service gage port connections on compressor suction and discharge lines with Schrader type fittings with brass caps, accumulator, reversing valve.

G. Controls and Safeties:

Operating controls and safeties shall be factory selected, assembled, and tested. The minimum control functions shall include the following:

1. Controls:
   a. A time delay control sequence is provided standard through the fan coil board.
   b. Automatic outdoor-fan motor protection.
2. Safeties:
   a. Diagnostics provided by matched indoor unit.
   b. Compressor motor current and temperature overload protection.
   c. Outdoor fan failure protection (High Pressure Switch).
   d. Low pressure protection.
   e. Fusible plug to vent refrigerant safely in case of a fire.

H. Electrical Requirements:

1. All sizes shall operate on single-phase, 60 Hz power at 208/230V or on three-phase, 60 Hz power at either 208/230 or 460 (for 036 size units).
2. Unit control voltage to the indoor-fan coil shall be 24 VDC.
3. All power and control wiring must be installed per NEC and all local electrical codes.

I. Refrigerant Line Lengths:

1. The unit shall be capable of 200 ft (61 m) maximum piping, a maximum lift (fan coil above) of 65 ft (19.8 m) and a maximum drop (fan coil below) of 150 ft (45.8 m). Accessories will be required to achieve these lengths.

J. Special Features (Field Installed):

1. Low-Ambient Kit: Control shall regulate fan-motor cycles in response to saturated condensing temperature of the unit. The control shall be capable of maintaining a condensing temperature of 100°F ± 10°F (37.78°C ± 5.5°C) with outdoor temperatures to -20°F (-28.9°C). Installation of kit shall not require changing the outdoor fan motor.
2. Crankcase Heater
3. Wind baffle
4. Stacking Kit
5. Wall Mounting Kit

NOTES:

Copyright 2008 Carrier Corp. • 7310 W. Morris St. • Indianapolis, IN 46231

Printed in U.S.A. Edition Date: 09/08

Catalog No.40QNC−Q−1PD

Replaces: New

Manufacturer reserves the right to change, at any time, specifications and designs without notice and without obligations.