**45MHHAC**
**High Wall Unit Ductless System**
**Sizes 09K, 12K, 18K, 24K (Cooling Only)**

Carrier

# Installation Instructions

**Fig. 1 — Sizes 09K - 24K**

**NOTE: Read the entire instruction manual before starting the installation. Images are for illustration purposes only. Actual models may differ slightly.**

## TABLE OF CONTENTS


PAGE
SAFETY CONSIDERATIONS....2
MODEL NUMBERS AND COMPATIBILITY....5
INSTALLATION....6
ACCESSORIES....10
DIMENSIONS....11
ELECTRICAL DATA....12
WIRING DIAGRAM....13
INSTALLATION OVERVIEW....15
INSTALLATION SUMMARY....16
INSTALLATION....18
Step 1 - Select Installation Location....18
Step 2 - Drill Wall Hole For Connecting Piping....19
Step 3 - Install Refrigerant pipe and Drain Hose....21
Step 4 - Electrical Work Preparation....23
Step 5 - Wrap Piping and Cables....25
Step 6 - Mount Indoor Unit....26
CONNECTION INSTRUCTIONS - REFRIGERANT PIPING....28
Step 1 - Cut Pipes....28
Step 2 - Remove Burrs....29
WIRELESS REMOTE CONTROLLER INSTALLATION....32
OPTIONAL WIRED WALL-MOUNTED REMOTE CONTROL INSTALLATION....32
TROUBLESHOOTING....33
DUCTLESS START-UP CHECKLIST - Single Zone....36


Specifications subject to change without notice.

# SAFETY CONSIDERATIONS

Installing, starting up, and servicing air- conditioning equipment can be hazardous due to system pressures, electrical components, and equipment location (roofs, elevated structures, etc.).
Only trained, qualified installers and service mechanics should install, start- up, and service this equipment.

Untrained personnel can perform basic maintenance functions such as coil cleaning. All other operations should be performed by trained service personnel only.

When working on the equipment, observe the precautions in the literature and on tags, stickers, and labels attached to the equipment.

Follow all safety codes.Wear safety glasses and work gloves. Keep a quenching cloth and a fire extinguisher nearby when brazing. Use care in handling, rigging, and setting bulky equipment.
Read these instructions thoroughly and follow all warnings or cautions included in the literature and attached to the unit. Consult local building codes and National Electrical Code (NEC) for special requirements.
Recognize safety information.

## This is the safety - alert symbol ⚠.

When you see this symbol on the unit and in instructions or manuals, be alert to the potential for personal injury. Understand these signal words: **DANGER**, **WARNING**, and **CAUTION**. These words are used with the safety- alert symbol.

**DANGER** identifies the most serious hazards which will result in severe personal injury or death.

**WARNING** signifies hazards which could result in personal injury or death.

**CAUTION** is used to identify unsafe practices which may result in minor personal injury or product and property damage.

**NOTE is used to highlight suggestions which will result in enhanced installation, reliability, or operation.**

## ⚠ WARNING

**ELECTRICAL SHOCK HAZARD**
Failure to follow this warning could result in personal injury or death.

Before installing, modifying, or servicing system, the main electrical disconnect switch must be in the **OFF** position. There may be more than 1 disconnect switch. Lock out and tag switch with a suitable warning label.

## ⚠ WARNING

**EXPLOSION HAZARD**
Failure to follow this warning could result in death, serious personal injury, and/or property damage.

Never use air or gases containing oxygen for leak testing or operating refrigerant compressors. Pressurized mixtures of air or gases containing oxygen can lead to an explosion.

## ⚠ CAUTION

**EQUIPMENT DAMAGE HAZARD**

Failure to follow this caution may result in equipment damage or improper operation.

Do not bury more than 36 in. (914 mm) of refrigerant pipe in the ground. If any section of pipe is buried, there must be a 6 in. (152 mm) vertical rise to the valve connections on the outdoor units. If more than the recommended length is buried, refrigerant may migrate to the cooler buried section during extended periods of system shutdown. This causes refrigerant slugging and could possibly damage the compressor at start-up.

## ⚠ WARNING

This appliance is not intended for use by persons (including children) with reduced physical, sensory or mental capabilities, or lack of experience and knowledge, unless they have been given supervision or instruction concerning use of the appliance by a person responsible for their safety. Children should be supervised to ensure that they do not play with the appliance.

## ⚠ WARNING

Only use the specified wire. If the wire is damaged, it must be replaced by the manufacturer, its service agent or similarly qualified persons in order to avoid a hazard. The product must be properly grounded at the time of installation, or electric shock may occur.

For all electrical work, follow all local and national wiring standards, regulations, and the Installation Manual. Connect the cables tightly, and clamp them securely to prevent external forces from damaging the terminal. Improper electrical connections can overheat and cause fire, and may also cause shock. All electrical connections must be made according to the Electrical Connection Diagram located on the panels of the indoor and outdoor units.

All wiring must be properly arranged to ensure that the control board cover can close properly. If the control board cover is not closed properly, it can lead to corrosion and cause the connection points on the terminal to heat up, catch fire, or cause electrical shock.

Disconnection must be incorporated in the fixed wiring in accordance with NEC, CSA and Local Codes. **Do not** share the electrical outlet with other appliances. Improper or insufficient power supply can cause fire or electric shock.

If connecting power to fixed wiring, an all-pole disconnection device which has at least 3mm clearances in all poles, and have a leakage current that may exceed 10mA, the residual current device (RCD) having a rated residual operating current not exceeding 30mA, and disconnection must be incorporated in the fixed wiring in accordance with NEC, CSA and Local Codes.

## ⚠ WARNING

Turn off the air conditioner and disconnect the power before performing any installation or repairing. Failure to do so can cause electric shock.

Installation must be performed by an authorized dealer or specialist. Defective installation can cause water leakage, electrical shock, or fire. Installation must be performed according to the installation instructions.

Improper installation can cause water leakage, electrical shock, or fire. Contact an authorized service technician for repair or maintenance of this unit. This appliance shall be installed in accordance with national wiring regulations.

Only use the included accessories, parts, and specified parts for installation. Using non-standard parts can cause water leakage, electrical shock, fire, and can cause the unit to fail.

Install the unit in a firm location that can support the unit's weight. If the chosen location cannot support the unit's weight, or the installation is not done properly, the unit may drop and cause serious injury and damage. Install drainage piping according to the instructions in this manual. Improper drainage may cause water damage to your home and property. For units that have an auxiliary electric heater, do not install the unit within 3 feet (1 meter) of any combustible materials.

If combustible gas accumulates around the unit, it may cause fire.

Do not turn on the power until all work has been completed.

When moving or relocating the air conditioner, consult experienced service technicians for disconnection and re-installation of the unit.

Read the information for details in "indoor unit installation" and "outdoor unit installation" sections.

**NOTE: The air conditioner's circuit board (PCB) is designed with a fuse to provide overcurrent protection. The specifications of the fuse are printed on the circuit board, for example: T3.15AL/250VAC, T5AL/250VAC, T3.15A/250VAC, T5A/250VAC, T20A/250VAC, T30A/250VAC,etc.**

**NOTE: Only a blast-proof ceramic fuse can be used.**

## ⚠ WARNING

**FOR FLAMMABLE REFRIGERANTS**

Do not use means to accelerate the defrosting process or to clean, other than those recommended by the manufacturer.

The appliance shall be stored in a room without continuously operating ignition sources (for example: open flames, an operating gas appliance or an operating electric heater).

Do not pierce or burn. Be aware that refrigerants may not contain an odor.

## ⚠ WARNING

**PERSONAL INJURY AND PROPERTY DAMAGE HAZARD**

For continued performance, reliability, and safety, the only approved accessories and replacement parts are those specified by the equipment manufacturer. The use of non-manufacturer approved parts and accessories could invalidate the equipment limited warranty and result in a fire risk, equipment malfunction, and failure.

Review the manufacturer's instructions and replacement parts catalogs available from your equipment supplier.

**WARNING** - RISK OF FIRE DUE TO FLAMMABLE REFRIGERANT USED. FOLLOW HANDLING INSTRUCTIONS CAREFULLY IN COMPLIANCE WITH NATIONAL REGULATIONS.

R-454B Refrigerant Safety Group **A2L** R-454B

**Table 1 —Symbols displayed on the indoor unit or outdoor unit**

| | | |
|---|---|---|
| A2L | WARNING | This symbol shows that this appliance used a flammable refrigerant. If the refrigerant is leaked and exposed to an external ignition source, there is a risk of fire. |
| | CAUTION | This symbol shows that the operation manual should be read carefully. |
| | CAUTION | This symbol shows that a service personnel should be handling this equipment with reference to the installation manual. |
| | CAUTION | |
| | CAUTION | This symbol shows that information is available such as the operating manual or installation manual. |

## Table 2 — A (min)

| | | HO, RELEASE HEIGHT FT (M) | | | | | |
|---|---|---|---|---|---|---|---|
| MC or Mrel Refrigerant Charge Amount pounds (kilograms) | Mc or Mrel (lbs (kg) | ≤ 7.2 (2.2) | 7.5 (2.3) | 7.9 (2.4) | 8.5 (2.6) | 9.2 (2.8) | 9.8 (3.0) |
| | ≤ 3.91 (1.776) | 12 (1.10) | | | | | |
| | 4.0 (1.8) | 60 (5.53) | 57 (5.29) | 55 (5.07) | 50 (4.68) | 47 (4.34) | 44 (4.05) |
| | 4.4 (2.0) | 66 (6.14) | 63 (5.88) | 61 (5.63) | 56 (5.2) | 52 (4.83) | 48 (4.5) |
| | 4.9 (2.2) | 73 (6.76) | 70 (6.46) | 67 (6.19) | 62 (5.72) | 57 (5.31) | 53 (4.95) |
| | 5.3 (2.4) | 79 (7.37) | 76 (7.05) | 73 (6.76) | 67 (6.24) | 62 (5.79) | 58 (5.41) |
| | 5.7 (2.6) | 86 (7.99) | 82 (7.64) | 79 (7.32) | 73 (6.76) | 68 (6.27) | 63 (5.86) |
| | 6.2 (2.8) | 93 (8.6) | 89 (8.23) | 85 (7.88) | 78 (7.28) | 73 (6.76) | 68 (6.31) |
| | 6.6 (3.0) | 99 (9.21) | 95 (8.81) | 91 (8.45) | 84 (7.8) | 78 (7.24) | 73 (6.76) |
| | 7.1 (3.2) | 106 (9.83) | 101 (9.4) | 97 (9.01) | 90 (8.32) | 83 (7.72) | 78 (7.21) |
| | 7.5 (3.4) | 112 (10.44) | 108 (9.99) | 103 (9.57) | 95 (8.84) | 88 (8.2) | 82 (7.66) |
| | 7.9 (3.6) | 119 (11.06) | 114 (10.58) | 109 (10.14) | 101 (9.36) | 94 (8.69) | 87 (8.11) |
| | 8.4 (3.8) | 126 (11.67) | 120 (11.16) | 115 (10.7) | 106 (9.88) | 99 (9.17) | 92 (8.56) |
| | 8.8 (4.0) | 132 (12.29) | 126 (11.75) | 121 (11.26) | 112 (10.4) | 104 (9.65) | 97 (9.01) |
| | 9.3 (4.2) | 139 (12.9) | 133 (12.34) | 127 (11.82) | 117 (10.91) | 109 (10.14) | 102 (9.46) |
| | 9.7 (4.4) | 145 (13.51) | 139 (12.93) | 133 (12.39) | 123 (11.43) | 114 (10.62) | 107 (9.91) |
| | 10.1 (4.6) | 152 (14.13) | 145 (13.51) | 139 (12.95) | 129 (11.95) | 119 (11.1) | 112 (10.36) |
| | 10.6 (4.8) | 159 (14.74) | 152 (14.1) | 145 (13.51) | 134 (12.47) | 125 (11.58) | 116 (10.81) |
| | 11 (5.0) | 165 (15.36) | 158 (14.69) | 152 (14.08) | 140 (12.99) | 130 (12.07) | 121 (11.26) |
| | 11.5 (5.2) | 172 (15.97) | 164 (15.28) | 158 (14.64) | 145 (13.51) | 135 (12.55) | 126 (11.71) |
| | 11.9 (5.4) | 179 (16.58) | 171 (15.86) | 164 (15.2) | 151 (14.03) | 140 (13.03) | 131 (12.16) |
| | 12.3 (5.6) | 185 (17.2) | 177 (16.45) | 170 (15.77) | 157 (14.55) | 145 (13.51) | 136 (12.61) |
| | 12.8 (5.8) | 192 (17.81) | 183 (17.04) | 176 (16.33) | 162 (15.07) | 151 (14) | 141 (13.06) |
| | 13.2 (6.0) | 198 (18.43) | 190 (17.63) | 182 (16.89) | 168 (15.59) | 156 (14.48) | 145 (13.51) |
| | 13.7 (6.2) | 205 (19.04) | 196 (18.21) | 188 (17.45) | 173 (16.11) | 161 (14.96) | 150 (13.96) |
| | 14.1 (6.4) | 212 (19.66) | 202 (18.8) | 194 (18.02) | 179 (16.63) | 166 (15.44) | 155 (14.41) |
| | 14.6 (6.6) | 218 (20.27) | 209 (19.39) | 200 (18.58) | 185 (17.15) | 171 (15.93) | 160 (14.86) |
| | 15 (6.8) | 225 (20.88) | 215 (19.98) | 206 (19.14) | 190 (17.67) | 177 (16.41) | 165 (15.32) |
| | 15.4 (7.0) | 231 (21.5) | 221 (20.56) | 212 (19.71) | 196 (18.19) | 182 (16.89) | 170 (15.77) |
| | 15.9 (7.2) | 238 (22.11) | 228 (21.15) | 218 (20.27) | 201 (18.71) | 187 (17.37) | 175 (16.22) |

**Amin ( ft2 (m2)**
**Mc: Actual refrigerant charge in the system lbs (Kg)**
**Mrel: Refrigerant releasable charge lbs (Kg)**
**Ho: Release height, measured from duct opening, in ft (m)**
**Hinst: Height of install, from the bottom of the indoor appliance, measured in ft (m)**
**Ho ≈ Hinst**
**Warning: Minimum room area of conditioned space is based on releasable charge or total system refrigerant charge.**

**NOTE: For R454B refrigerant charge amount and minimum room area: The machine you purchased may be one of the types in Table 3. The indoor and outdoor units are designed to be used together. Check the machine you purchased. The height of the room cannot be less than 7.3ft /2.2m, and the minimum room area of operating or storage should be as specified in Table 2.**

# MODEL NUMBERS AND COMPATIBILITY

**Table 3 — Models**

| SYSTEM TONS | BTUH | VOLTAGE | MODELS |
|---|---|---|---|
| 1 | 12,000 | 115-1 | 45MHHAC12XC1 |
| 0.75 | 9,000 | 208/230-1 | 45MHHAC09XC3 |
| 1 | 12,000 | 208/230-1 | 45MHHAC12XC3 |
| 1.5 | 18,000 | 208/230-1 | 45MHHAC18XC3 |
| 2 | 24,000 | 208/230-1 | 45MHHAC24XC3 |

**Table 4 — Compatibility**

| INDOOR UNIT | | OUTDOOR UNIT (COOLING ONLY) | | | | |
|---|---|---|---|---|---|---|
| | | 37MHRAC12AA1 | 37MHRAC09AA3 | 37MHRAC12AA3 | 37MHRAC18AA3 | 37MHRAC24AA3 |
| High Wall | 45MHHAC12XC1 | • | | | | |
| | 45MHHAC09XC3 | | • | | | |
| | 45MHHAC12XC3 | | | • | | |
| | 45MHHAC18XC3 | | | | • | |
| | 45MHHAC24XC3 | | | | | • |

**NOTE: Refer to the unit's product data documents for a complete list of compatible units.**

# INSTALLATION

## ⚠ WARNING

**Prior to Installation**

Before installing the indoor unit, ensure the compatibility with the outdoor unit using the product data as a reference. It is also necessary to confirm the proper application of the equipment and to perform a heat load calculation for proper sizing.

- A location which is convenient to installation and not exposed to strong winds.
- A location which can bear the weight of the outdoor unit and where the outdoor unit can be mounted in a level position.
- A location which provides appropriate clearances (see INSTALLATION OVERVIEW on page 15).
- Allow sufficient space for airflow and service of the unit. See INSTALLATION OVERVIEW on page 15 for the required minimum distances between the unit or walls.

**NOTE: DO NOT install the indoor or outdoor units in a location with special environmental conditions. For those applications, contact your Ductless representative.**

## ⚠ WARNING

**FOR FLAMMABLE REFRIGERANTS**

Do not use means to accelerate the defrosting process or to clean, other than those recommended by the manufacturer.

The appliance shall be stored in a room without continuously operating ignition sources (for example: open flames, an operating gas appliance or an operating electric heater).

Do not pierce or burn. Be aware that refrigerants may not contain an odor.

The room area of operating or storage should be as specified in Table 2 on page 4.

1. Installation (Space)
   - That the installation of pipe-work shall be kept to a minimum.
   - That pipe-work shall be protected from physical damage.
   - Where refrigerant pipes shall be compliance with national gas regulations.
   - That mechanical connections shall be accessible for maintenance purposes.
   - In cases that require mechanical ventilation, ventilation openings shall be kept clear of obstruction.
   - When disposing of the product is used, be based on national regulations, properly processed.
2. Servicing
   - Any person who is involved with working on or breaking into a refrigerant circuit should hold a current valid certificate from an industry-accredited assessment authority, which authorities their competence to handle refrigerants safely in accordance with an industry recognized assessment specification.
3. Maintenance and repair requiring the assistance of other skilled personnel shall be carried out under the supervision of the person competent in the use of flammable refrigerants.
4. Do not use any means to accelerate the defrosting process or to clean, other than those recommended by the manufacturer.
5. The appliance shall be stored in a room without continuously operating ignition sources (for example: open flames, an operating gas appliance or an operating electric heater).
6. Be more careful that foreign matter (oil, water, etc) does not enter the piping. Also, when storing the piping, securely seal the opening by pinching, taping, etc.
7. Do not pierce or burn.
8. Be aware that refrigerants may not contain an odor.
9. All working procedure that affects safety means shall only be carried by competent persons.
10. Appliance shall be stored in a well ventilated area where the room size corresponds to the room area as specific for operation.
11. The appliance shall be stored so as to prevent mechanical damage from occurring.
12. Joints shall be tested with detection equipment with a capability of 5 g/year of refrigerant or better, with the equipment in standstill and under operation or under a pressure of at least these standstill or operation conditions after installation. Detachable joints shall NOT be used in the indoor side of the unit (brazed, welded joint could be used).

**NOTE ON FUSE SPECIFICATIONS**

- The air conditioner's circuit board (PCB) may be designed with a fuse to provide overcurrent protection. This fuse must be replaces with identical component.
- The specifications of the fuse, if equipped, are printed on the circuit board, examples of such are T5A/250VAC and T10A/250VAC.
- Installation, service, maintenance and repair of this unit must be performed by a certified technician.
- Product un-installation and recycling must be performed by a certified technician.
- When the unit is checked for leaks, proper record-keeping of all checks is strongly recommended.

1. **Installation** (where refrigerant pipes are allowed)
   Any person who is involved with working on or breaking into a refrigerant circuit should hold a current valid certificate from an industry-accredited assessment authority, which authorizes their competence to handle refrigerants safely in accordance with an industry recognized assessment specification.
   Maintenance and repair requiring the assistance of other skilled personnel shall be carried out under the supervision of the person competent in the use of flammable refrigerants.
   That the installation of pipe-work shall be kept to a minimum.
   That pipe-work shall be protected from physical damage.
   Where refrigerant pipes shall be compliance with national gas regulations.
   That mechanical connections shall be accessible for maintenance purposes.
   Be more careful that foreign matter (oil, water, etc) does not enter the piping.
   Also, when storing the piping, securely seal the opening by pinching, taping, etc.
   All working procedure that affects safety means shall only be carried by competent persons.
   Appliance shall be stored in a well ventilated area where the room size corresponds to the room area as specified for operation.
   Joints shall be tested with detection equipment with a capability of 5 g/year of refrigerant or better, with the equipment in standstill and under operation or under a pressure of at least these standstill or operation conditions after installation. Detachable joints shall NOT be used in the indoor side of the unit (brazed, welded joint could be used). In cases that require mechanical ventilation, ventilation openings shall be kept clear of obstruction.

2. **When a FLAMMABLE REFRIGERANT is used,** the requirements for installation space of appliance and/or ventilation requirements are determined according to

   - the mass charge amount (M) used in the appliance, the installation location, the type of ventilation of the location or of the appliance.
   piping material, pipe routing, and installation shall include protection from physical damage in operation and service, and be in compliance with national and local codes and standards, such as ASHRAE 15, IAPMO Uniform Mechanical Code, ICC International Mechanical Code, or CSA B52. All field joints shall be accessible for inspection prior to being covered or enclosed.
   that protection devices, piping, and fittings shall be protected as far as possible against adverse environmental affects, for example, the danger of water collecting and freezing in relief pipes or the accumulation of dirt and debris;
   - that piping in refrigeration systems shall be so designed and installed to minimize the likelihood of hydraulic shock damaging the system;
   - that steel pipes and components shall be protected against corrosion with a rustproof coating before applying any insulation;
   - that precautions shall be taken to avoid excessive vibration or pulsation;
   the minimum floor area of the room shall be mentioned in the form of a table or a single figure without reference to a formula; after completion of field piping for split systems, the field pipework shall be pressure tested with an inert gas and then vacuum tested prior to refrigerant charging, according to the following requirements:
   a. The minimum test pressure for the low side of the system shall be the low side design pressure and the minimum test pressure for the high side of the system shall be the high side design pressure, unless the high side of the system cannot be isolated from the low side of the system in which case the entire system shall be pressure tested to the low side design pressure.
   b. The test pressure after removal of pressure source shall be maintained for at least 1 h with no decrease of pressure indicated by the test gauge, with test gauge resolution not exceeding 5% of the test pressure.
   c. During the evacuation test, after achieving a vacuum level specified in the manual or less, the refrigeration system shall be isolated from the vacuum pump and the pressure shall not rise above 1500 microns within 10 min. The vacuum pressure level shall be specified in the manual, and shall be the lessor of 500 microns or the value required for compliance with national and local codes and standards, which may vary between residential, commercial, and industrial buildings.
   - field-made refrigerant joints indoors shall be tightness tested according to the following requirements: The test method shall have a sensitivity of 5 grams per year of refrigerant or better under a pressure of at least 0.25 times the maximum allowable pressure. No leak shall be detected.

3. Qualification of Workers
   Any maintenance, service and repair operations must be required qualification of the working personnel. Every working procedure that affects safety means shall only be carried out by competent persons that joined the training and achieved competence should be documented by a certificate. The training of these procedures is carried out by national training organizations or manufacturers that are accredited to teach the relevant national competency standards that may be set in legislation. All training shall follow the ANNEX HH requirements of UL 60335-2-40 4th Edition.
   Examples for such working procedures are:
   • breaking into the refrigerating circuit;
   • opening of sealed components;
   • opening of ventilated enclosures.

**Information Servicing**

1. Checks to the area
   Prior to beginning work on systems containing flammable refrigerants, safety checks are necessary to ensure that the risk of ignition is minimized. For repair to the refrigerating system, the following precautions shall be complied with prior to conducting work on the system.

2. Work procedure
   Works shall be undertaken under a controlled procedure so as to minimize the risk of a flammable gas or vapor being present while the work is being performed.

3. General work area
   All maintenance staff and others working in the local area shall be instructed on the nature of work being carried out. work in confined spaces shall be avoided.

4. Checking for presence of refrigerant

   The area shall be checked with an appropriate refrigerant detector prior to and during work, to ensure the technician is aware of potentially flammable atmospheres. Ensure that the leak detection equipment being used is suitable for use with flammable refrigerants, i.e. no sparking, adequately sealed or intrinsically safe.

5. Presence of a fire extinguisher

   If any hot work is to be conducted on the refrigeration equipment or any associated parts, appropriate fire extinguishing equipment shall be available to hand. Have a dry power or CO2 fire extinguisher adjacent to the charging area.

6. No ignition sources

   No person carrying out work in relation to a REFRIGERATING SYSTEM which involves exposing any pipe work shall use any sources of ignition in such a manner that it may lead to the risk of fire or explosion. All possible ignition sources, including cigarette smoking, should be kept sufficiently far away from the site of installation, repairing, removing and disposal, during which refrigerant can possibly be released to the surrounding space. Prior to work taking place, the area around the equipment is to be surveyed to make sure that there are no flammable hazards or ignition risks. "No Smoking" signs shall be displayed.

7. Ventilated area

   Ensure that the area is in the open or that it adequately ventilated before breaking into the system or conducting any hot work. A degree of ventilation shall continue during the period that the work is carried out. The ventilation should safely disperse any released refrigerant and preferably expel it externally into the atmosphere.

8. Checks to the refrigeration equipment

   Where electrical components are being changed, they shall be fit for the purpose and to the correct specification. At all times the manufacturer's maintenance and service guidelines shall be followed. If in doubt consult the manufacturer's technical department for assistance. The following checks shall be applied to installations using FLAMMABLE REFRIGERANTS:

   a. the actual refrigerant charge is in accordance with the room size within which the refrigerant containing parts are installed;
   b. the ventilation machinery and outlets are operating adequately and are not obstructed;
   c. if an indirect refrigerating circuit is being used, the secondary circuits shall be checked for the presence of refrigerant;
   d. marking to the equipment continues to be visible and legible, marking and signs that are illegible shall be corrected;
   e. refrigeration pipe or components are installed in a position where they are unlikely to be exposed to any substance which may corrode refrigerant containing components, unless the components are constructed of materials which are inherently resistant to being corroded or are suitably protected against being so corroded.

9. Checks to electrical devices

   Repair and maintenance to electrical components shall include initial safety checks and component inspection procedures. If a fault exists that could compromise safety, then no electrical supply shall be connected to the circuit until it is satisfactorily dealt with. If the fault cannot be corrected immediately but it is necessary to continue operation, and adequate temporary solution shall be used. This shall be reported to the owner of the equipment so all parties are advised.
   **Initial safety checks shall include:**
   - that capacitors are discharged: this shall be done in a safe manner to avoid possibility of sparking
   - that there no live electrical components and wiring are exposed while charging,
   - recovering or purging the system; that there is continuity of earth bonding.

10. Sealed electrical components shall be replaced

11. Intrinsically safe components must be replaced.

12. Cabling

    Check that cabling will not be subject to wear, corrosion, excessive pressure, vibration, sharp edges or any other adverse environmental effects. The check shall also take into account the effects of aging or continual vibration from sources such as compressors or fans.

13. Detection of flammable refrigerants

    Under no circumstances shall potential sources of ignition be used in the searching for or detection of refrigerant leaks. A halide torch (or any other detector using a naked flame) shall not be used.
    The following leak detection methods are deemed acceptable for refrigerant systems. Electronic leak detectors may be used to detect refrigerant leaks but, in the case of FLAMMABLE REFRIGERANTS, the sensitivity may not be adequate, or may need re-calibration. (Detection equipment shall be calibrated in a refrigerant-free area.) Ensure that the detector is not a potential source of ignition and is suitable for the refrigerant used. Leak detection equipment shall be set at a percentage of the LFL of the refrigerant and shall be calibrated to the refrigerant employed, and the appropriate percentage of gas (25% maximum) is confirmed.
    Leak detection fluids are also suitable for use with most refrigerants but the use of detergents containing chlorine shall be avoided as the chlorine may react with the refrigerant and corrode the copper pipe-work.
    **NOTE** Examples of leak detection fluids are:
    - bubble method,
    - fluorescent method agents.
    If a leak is suspected, all naked flames shall be removed/extinguished. If a leakage of refrigerant is found which requires brazing, all of the refrigerant shall be recovered from the system, or isolated (by means of shut o valves) in a part of the system remote from the leak. See the following instructions of removal of refrigerant.

14. Removal and evacuation

    When breaking into the refrigerant circuit to make repairs - or for any other purpose conventional procedures shall be used. However, for flammable refrigerants it is important that best practice be followed, since flammability is a consideration.
    The following procedure shall be adhered to:
    - safely remove refrigerant following local and national regulations;
    - evacuate;
    - purge the circuit with inert gas (optional for A2L);
    - evacuate (optional for A2L);
    - continuously flush or purge with inert gas when using flame to open circuit; and
    - open the circuit
    The refrigerant charge shall be recovered into the correct recovery cylinders if venting is not allowed by local and national codes. For appliances containing flammable refrigerants, the system shall be purged with oxygen-free nitrogen to render the appliance safe for flammable refrigerants. This process might need to be repeated several times. Compressed air or oxygen shall not be used for purging refrigerant systems.
    For appliances containing flammable refrigerants, refrigerants purging shall be achieved by breaking the vacuum in the system with oxygen-free nitrogen and continuing to fill until the working pressure is achieved, then venting to atmosphere, and finally pulling down to a vacuum (optional for A2L). This process shall be repeated until no refrigerant is within the system (optional for A2L). When

the final oxygen-free nitrogen charge is used, the system shall be vented down to atmospheric pressure to enable work to take place. The outlet for the vacuum pump shall not be close to any potential ignition sources, and ventilation shall be available.

15. Charging procedures

In addition to conventional charging procedures, the following requirements shall be followed:
- Works shall be undertaken with appropriate tools only (In case of uncertainty, please consult the manufacturer of the tools for use with flammable refrigerants)
- Ensure that contamination of different refrigerants does not occur when using charging equipment. Hoses or lines shall be as short as possible to minimize the amount of refrigerant contained in them.
- Cylinders shall be kept upright.
- Ensure that the refrigeration system is earthed prior to charging the system with refrigerant.
- Label the system when charging is complete (if not already).
- Extreme care shall be taken not to overfill the refrigeration system.
- Prior to recharging the system it shall be pressure tested with oxygen free nitrogen (OFN). The system shall be leak tested on completion of charging but prior to commissioning. A follow up leak test shall be carried out prior to leaving the site.

16. Decommissioning

Before carrying out this procedure, it is essential that the technician is completely familiar with the equipment and all its detail. It is recommended good practice that all refrigerants are recovered safely. Prior to the task being carried out, an oil and refrigerant sample shall be taken in case analysis is required prior to re-use of recovered refrigerant. It is essential that electrical power is available before the task is commenced.

a. Become familiar with the equipment and its operation.
b. Isolate system electrically
c. Before attempting the procedure ensure that:

- mechanical handling equipment is available, if required, for handling refrigerant cylinders;
- all personal protective equipment is available and being used correctly;
- the recovery process is supervised at all times by a competent person;
- recovery equipment and cylinders conform to the appropriate standards.

d. Pump down refrigerant system, if possible.
e. If a vacuum is not possible, make a manifold so that refrigerant can be removed from various parts of the system.
f. Ensure the cylinder is situated on the scales before recovery takes place.
g. Start the recovery machine and operate in accordance with instructions.
h. Do not overfill cylinders (no more than 80% volume liquid charge)
i. Do not exceed the maximum working pressure of the cylinder, even temporarily.
j. When the cylinders have been filled correctly and the process completed, make sure that the cylinders and the equipment are removed from site promptly and all isolation valves on the equipment are closed off.
k. Recovered refrigerant shall not be charged into another refrigeration system unless it has been cleaned and checked.

17. Labeling

Equipment shall be labeled stating that it has been de-commissioned and emptied of refrigerant. The label shall be dated and signed. For appliances containing FLAMMABLE REFRIGERANTS, ensure that there are labels on the equipment stating the equipment contains FLAMMABLE REFRIGERANT.

18. Recovery

When removing refrigerant from a system, either for servicing or decommissioning, it is recommended good practice that all refrigerants are removed safely. When transferring refrigerant into cylinders, ensure that only appropriate refrigerant recovery cylinders are employed. Ensure that the correct number of cylinders for holding the total system charge is available. All cylinders to be used are designated for the recovered refrigerant and labeled for that refrigerant (i. e. special cylinders for the recovery of refrigerant). Cylinders shall be complete with pressure-relief valve and associated shut-o valves in good working order. Empty recovery cylinders are evacuated and, if possible, cooled before recovery occurs. The recovery equipment shall be in good working order with a set of instructions concerning the equipment that is at hand and shall be suitable for the recovery of the flammable refrigerant. If in doubt, the manufacturer should be consulted. In addition, a set of calibrated weighing scales shall be available and in good working order. Hoses shall be complete with leak-free disconnect couplings and in good condition.
The recovered refrigerant shall be processed according to local legislation in the correct recovery cylinder, and the relevant waste transfer note arranged. Do not mix refrigerants in recovery units and especially not in cylinders. If compressors or compressor oils are to be removed, ensure that they have been evacuated to an acceptable level to make certain that flammable refrigerant does not remain within the lubricant. The compressor body shall not be heated by an open flame or other ignition sources to accelerate this process. When oil is drained from a system, it shall be carried out safely.

19. Transportation, marking and storage for units

a. Transport of equipment containing flammable refrigerants Compliance with the transport regulations.
b. Marking of equipment using signs / Compliance with local regulations.
c. Disposal of equipment using flammable refrigerants / Compliance with national regulations.
d. Storage of equipment/appliances / The storage of equipment should be in accordance with the manufacturer’s instructions.
e. Storage of packed (unsold) equipment / Storage package protection should be constructed such that mechanical damage to the equipment inside the package will not cause a leak of the refrigerant charge.
f. The maximum number of pieces of equipment permitted to be stored together will be determined by local regulations.

# ACCESSORIES

The system is shipped with the following accessories. Use all of the installation parts and accessories to install the system. Improper installation may result in water leakage, electrical shock and fire, or cause the equipment to fail. Keep the installation manual in a safe place and do not discard any other accessories until the installation has been completed.

**Table 5 — Accessories**

| NAME | QUANTITY | SHAPE | NAME | QUANTITY | SHAPE |
|---|---|---|---|---|---|
| Manual | 2-3 | 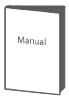  | Remote controller | 1 | |
| Mounting Plate + Template | 1+1 | 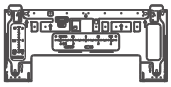 | Batteries | 2 | |
| Anchor | 5 | | Remote controller holder | 1 | |
| Mounting Plate Securing Screw | 5 | | Securing screw for remote controller holder | 2 | |
| Flare Nut | 2 | | Small Filter (Needs to be installed on the back of main air filter by an authorized technician while installing the unit. | 1-2 | |
| USB Wi-Fi Dongle (purchase seperately) | 1 | | **NOTE: Use to connect the connecting pipes between indoor and outdoor units.** | | |

**Table 6 — Pipe Specification**

| NAME | MODEL | PIPE SPEFICIATION | | REMARK |
|---|---|---|---|---|
| | | LIQUID SIDE | GAS SIDE | |
| Connecting Pipe Assembly | 09K | Φ1/4 in (Φ6.35mm) | Φ3/8 in (Φ9.52mm) | Parts you must purchase separately. Consult the dealer about the proper pipe size of the unit you purchased. |
| | 12K | Φ1/4 in (Φ6.35mm) | Φ3/8 in (Φ9.52mm) | |
| | 18K | Φ1/4 in (Φ6.35mm) | Φ1/2 in (Φ12.7mm) | |
| | 24K | Φ3/8 in (Φ9.52mm) | Φ5/8 in (Φ16mm) | |

# DIMENSIONS

**Table 7 — Dimensions**

| SYSTEM SIZE | | 12K 115V | 9K | 12K | 18K | 24K |
|---|---|---|---|---|---|---|
| | | (115 V) | (208/230 V) | (208/230 V) | (208/230 V) | (208/230 V) |
| Height (H) | inch | 11.61 | 11.5 | 11.61 | 12.64 | 13.27 |
| | mm | 295 | 292 | 295 | 321 | 337 |
| Width (W) | inch | 31.57 | 28.7 | 31.57 | 38.23 | 42.6 |
| | mm | 802 | 729 | 802 | 971 | 1082 |
| Depth (D) | inch | 7.87 | 7.87 | 7.87 | 8.98 | 9.21 |
| | mm | 200 | 200 | 200 | 228 | 234 |
| Weight -Net | lbs. | 19.62 | 18.08 | 19.62 | 24.91 | 30.86 |
| | kg | 8.9 | 8.2 | 8.9 | 11.3 | 14 |

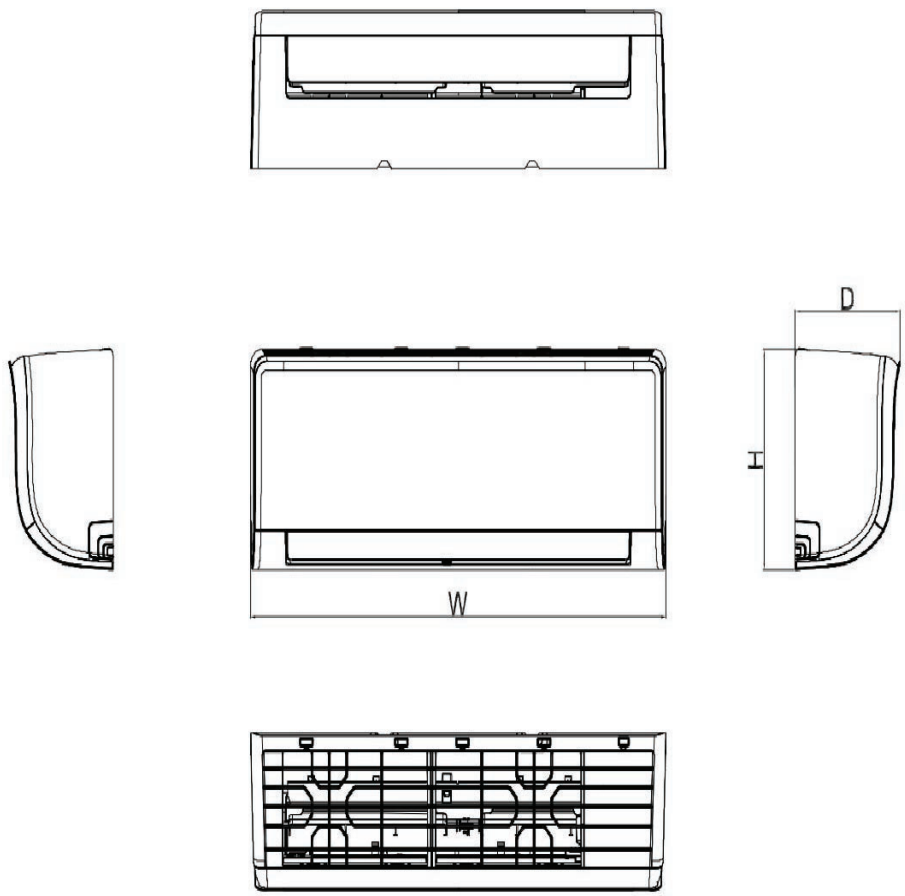


**Fig. 2 — All Sizes**

# ELECTRICAL DATA

**Table 8 — Electrical Data**

| OUTDOOR UNIT | | 12K 115V | 09K | 12K | 18K | 24K |
|---|---|---|---|---|---|---|
| | | (115 V) | (208/230V) | (208/230V) | (208/230V) | (208/230V) |
| Minimum Circuit Ampacity (MCA) | A | 3 | 3 | 3 | 3 | 3 |
| Maximum Overcurrent Protection Ampacity (MOPA) | A | 15 | 15 | 15 | 15 | 15 |
| Voltage-Phase-Frequency | | 115-1-60 | 208/230-1-60 | | | |
| Max – Min Voltage Range | | 127-104 | 253-187 | | | |

**LEGEND**
**FLA** - Full Load Amps
**MCA** - Minimum Circuit Amps
**MOP**- Maximum Overcurrent Protection

**NOTE: Outdoor Units: These units can connect with: Residential units.**

# WIRING DIAGRAM

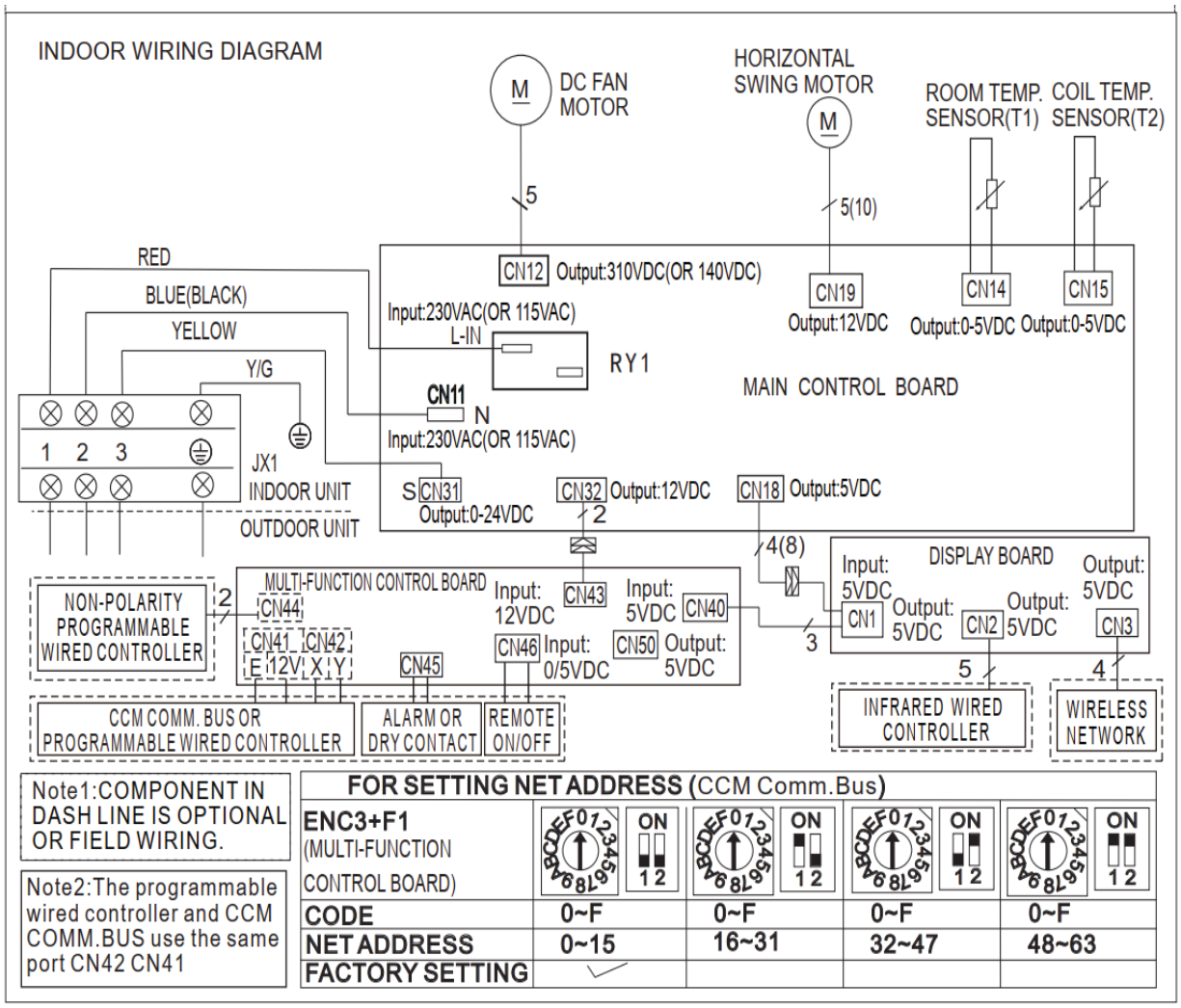


**Fig. 3 — Sizes 09K, 12K, 18K**

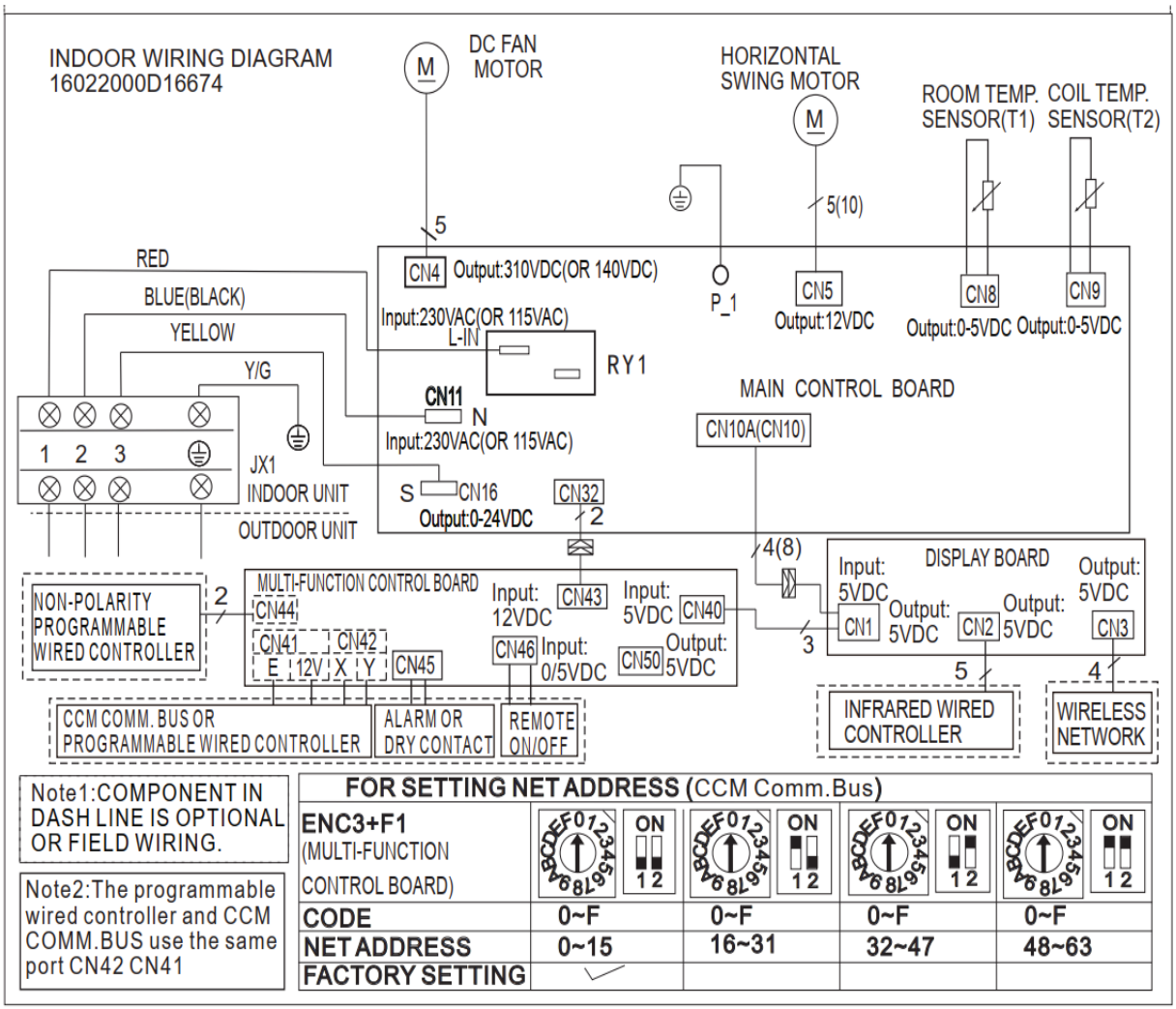


**Fig. 4 — Size 24K**

# INSTALLATION OVERVIEW

**NOTE: Illustrations in this manual are for explanatory purposes. The actual shape of your indoor unit may be slightly different. The actual shape shall prevail.**

## NOTE ON ILLUSTRATIONS:

Illustrations in this manual are for explanatory purposes. The actual shape of your indoor unit may be slightly different.

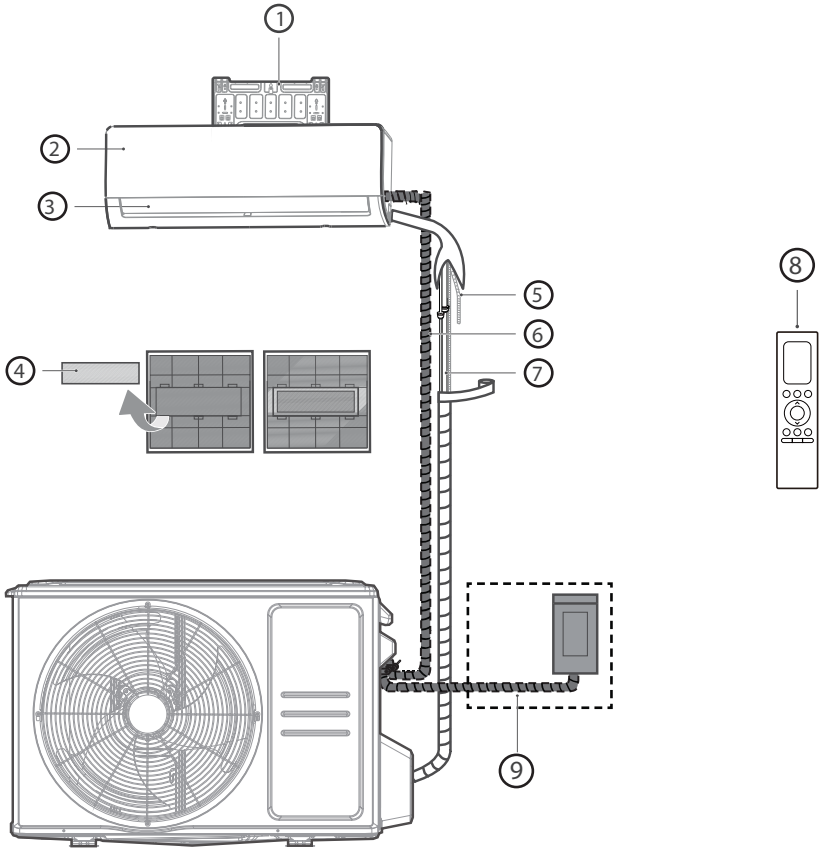


1. Wall Mounting Plate
2. Front Panel
3. Louver
4. Air Filter
5. Drain Pipe
6. Connection Cable (purchase separately)
7. Refrigerant Piping (purchase separately)
8. Remote Controller
9. Outdoor Unit Power Cable (purchase separately)

## Recommended tools

Gloves

Screwdriver & wrench

Hammer drill

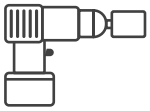
Core drill

Goggles & masks

Vinyl tape

# INSTALLATION SUMMARY

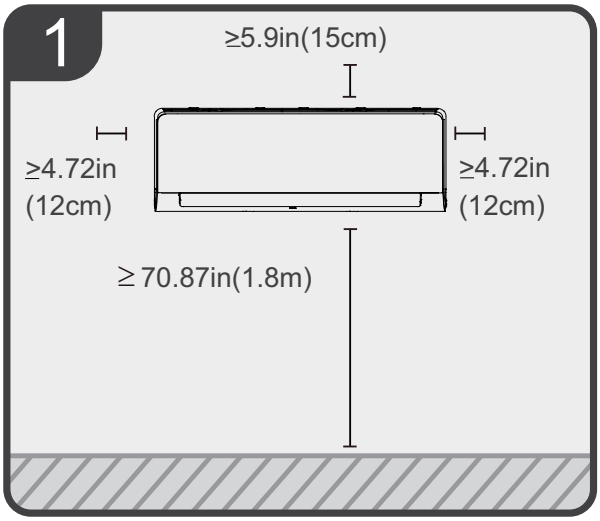


Select Installation Location

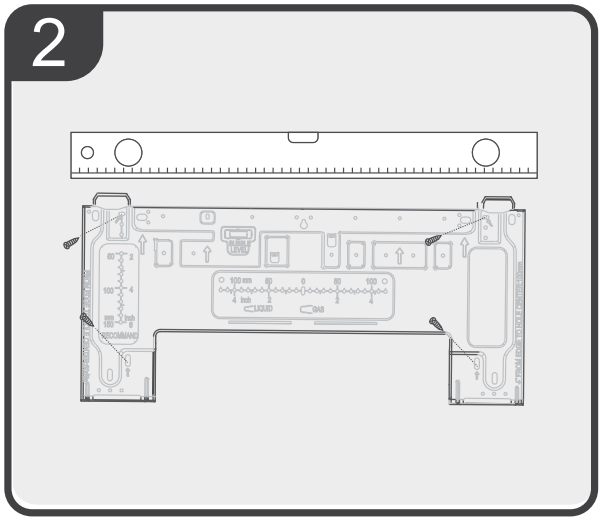


Attach Mounting Plate

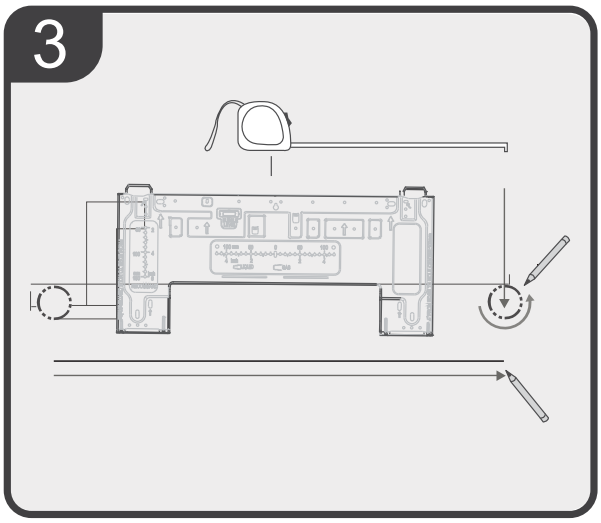


Determine Wall Hole Position

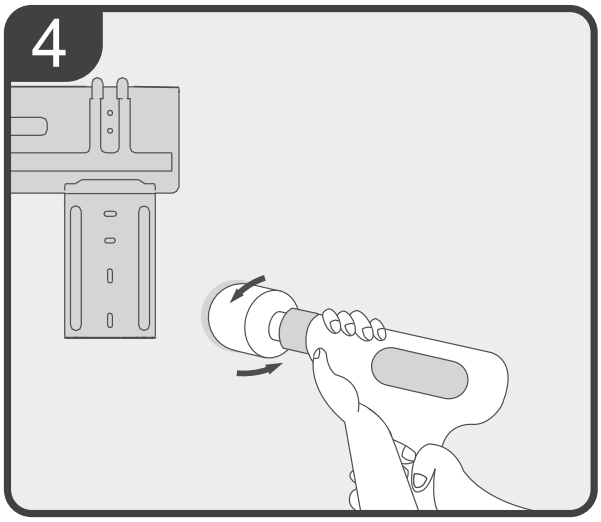


Drill Wall Hole

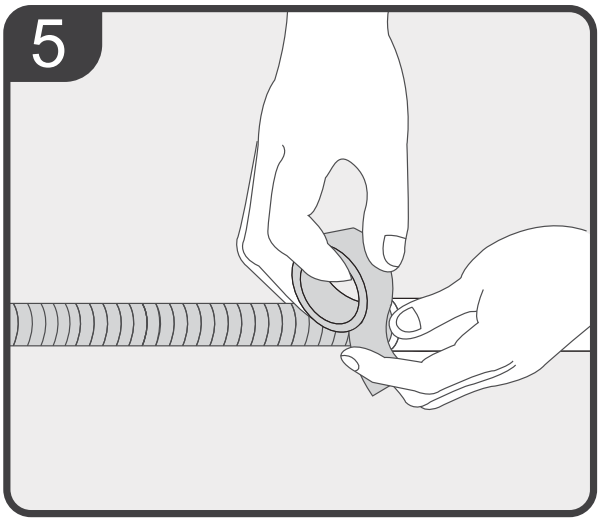


Prepare Drain Hose

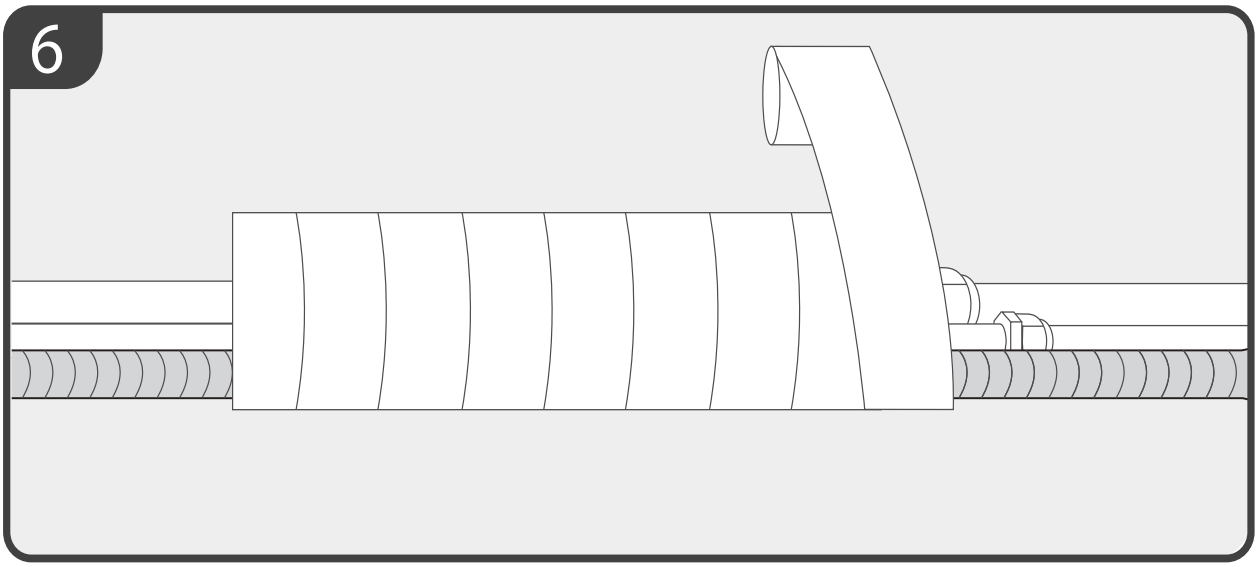


Wrap Piping and drain hose

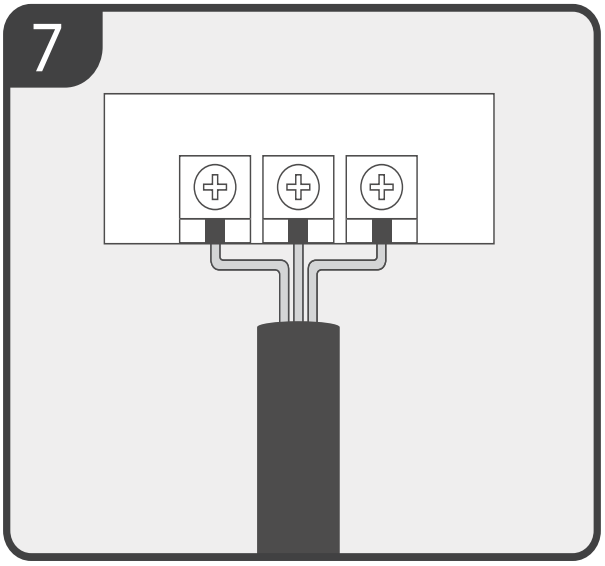


Connect Wiring

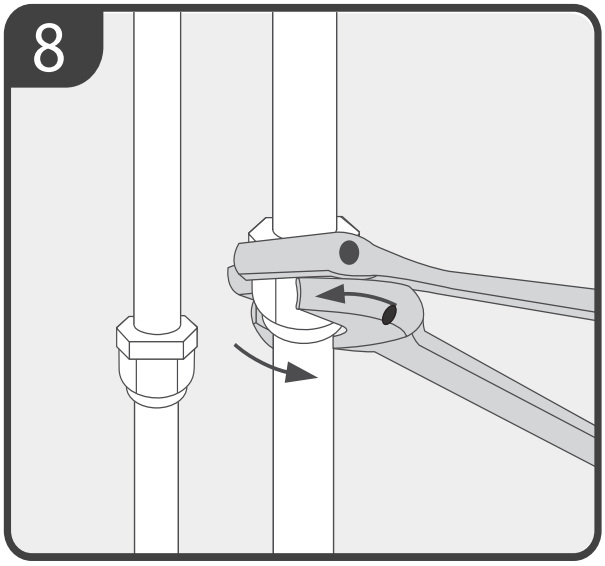


Connect Piping

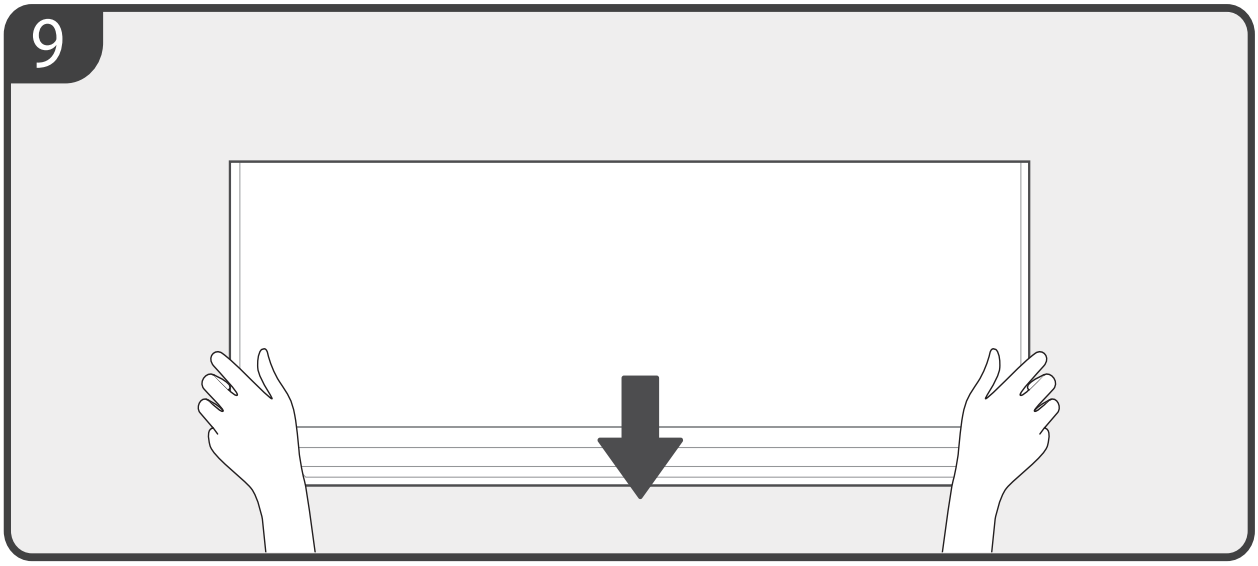


**Manufacturer reserves the right to change, at any time, specifications and designs without notice and without obligations.**

# INSTALLATION

## Step 1 - Select Installation Location

**NOTE : PRIOR TO INSTALLATION**

Before installing the indoor unit, refer to the label on the product box to make sure that the model number of the indoor unit matches the model number of the outdoor unit.

The following are standards that will help you choose an appropriate location for the unit.

**Proper installation locations meet the following standards:**

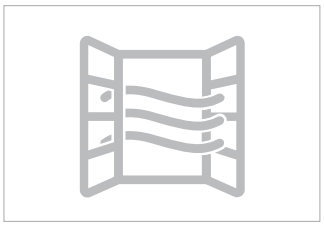

☑ Good air circulation

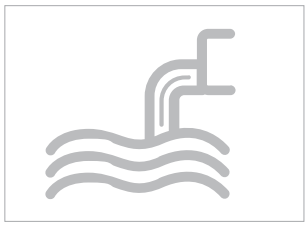

☑ Convenient drainage

☑ Noise from the unit will not disturb other people.

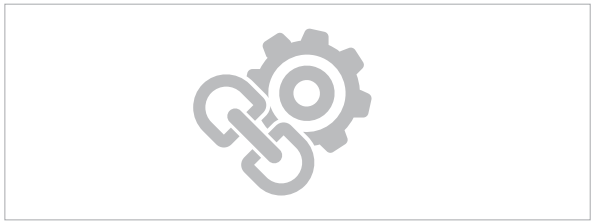

☑ Firm and solid—the location will not vibrate

☑ Strong enough to support the weight of the unit

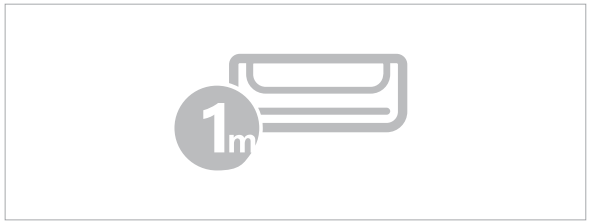


☑ A location at least one meter from all other electrical devices (e.g., TV, radio, computer)

**DO NOT install unit in the following locations:**

⊘ Near any source of heat, steam, or combustible gas

⊘ Near flammable items such as curtains or clothing

⊘ Near any obstacle that might block air circulation

⊘ Near the doorway

⊘ In a location subject to direct sunlight

**NOTE FOR PRODUCT INSTALLATION: If there is no fixed refrigerant piping: While selecting a location, be aware that you should leave ample room for a wall hole (see Drill wall hole for connecting piping step) for the signal cable and refrigerant piping that connect the indoor and outdoor units. The default position for all piping is the right side of the indoor unit (while facing the unit). However, the unit can accommodate piping to both the left and right.**

**Manufacturer reserves the right to change, at any time, specifications and designs without notice and without obligations.**

# Step 2 - Drill Wall Hole For Connecting Piping

## Determine wall hole location

Step 1 :

Remove the screw that attaches the mounting plate to the back of the indoor unit.

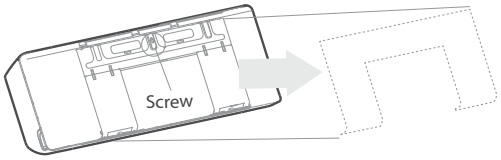


Step 2 :

Secure the mounting plate to the wall with the screws provided. Make sure that mounting plate is flat against the wall.

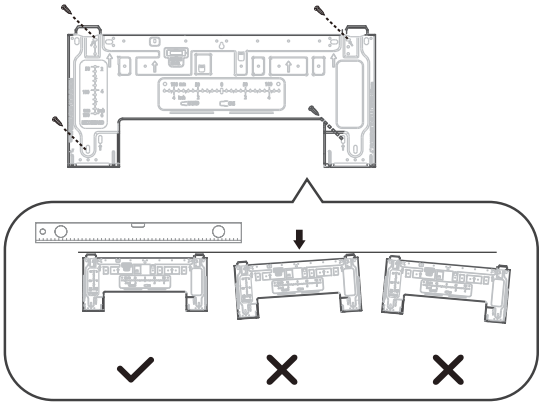

Correct orientation of Mounting Plate

Step 3 :

Confirm the mounting plate you own. Determine the location of the wall hole based on the position of the mounting plate. The dotted rectangular box on the right figure shows the size of your product.

09K

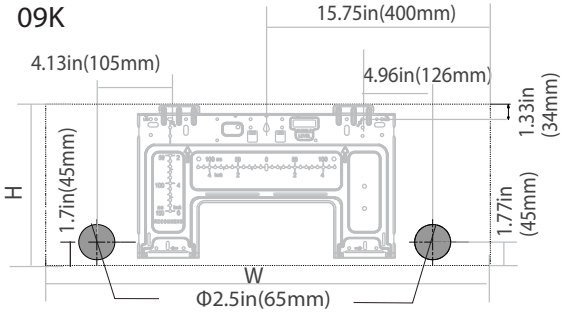


Indoor unit dimensions(WxH):
28.7in(729mm)x11.5in(293mm)

12K

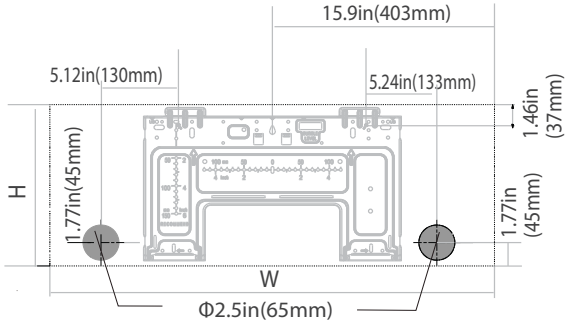


Indoor unit dimensions(WxH):
31.7in(806mm)x11.65in(296mm)

18K

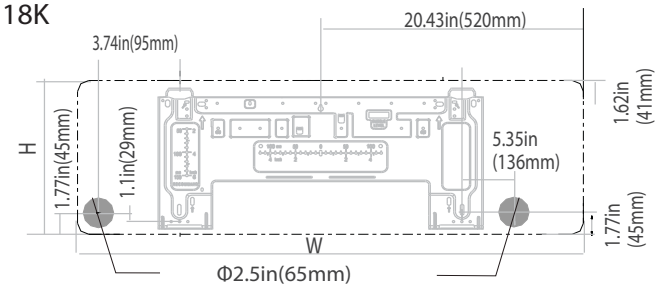


Indoor unit dimensions(WxH):
38.2in(971mm)x12.6in(321mm)

24K

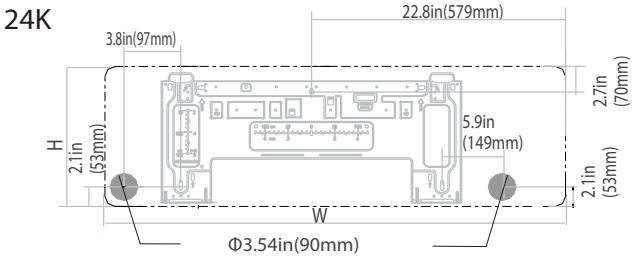


Indoor unit dimensions(WxH):
42.6in(1082mm)x13.3(338mm)

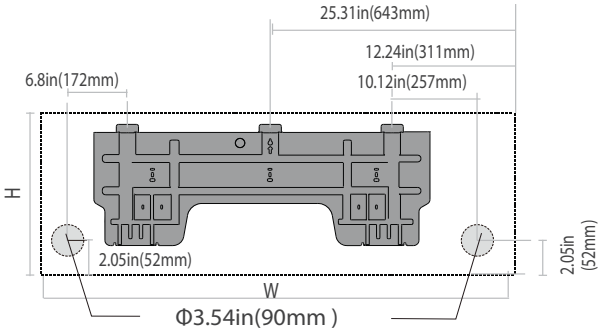


Indoor unit dimensions(WxH):
49.57in(1259mm)x14.25in(362mm)

**Manufacturer reserves the right to change, at any time, specifications and designs without notice and without obligations.**

**NOTE: The size of the wall hole is determined by the connecting pipes. When the pipe size of the gas side is Φ5/8in (Φ 16mm) or more, the wall hole should be Φ3.54in(Φ 90mm). When the pipe size of gas side is less than Φ5/8in(Φ16mm), the wall hole should be Φ2.5in (Φ65mm).**

## Drill wall hole

**⚠ CAUTION**

When drilling the wall hole, make sure to avoid wires, plumbing, and other sensitive components.

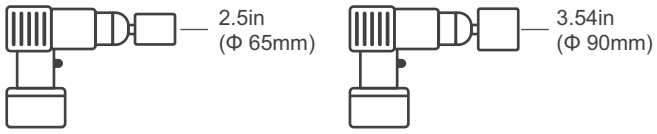


Using a 2.5in(65mm) or 3.54in(90mm) core drill(according to the unit you purchased )

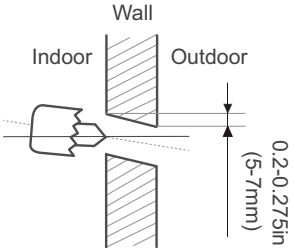


Drill the wall hole

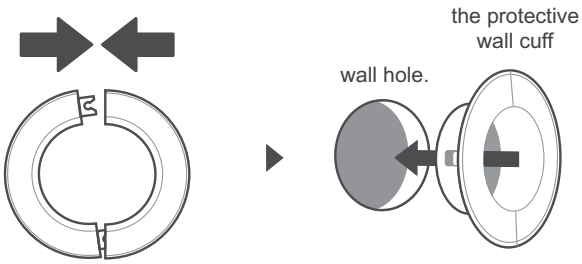


Place the protective wall cuff in the hole.

### Step 1

Using a 2.5in(65mm) or 3.54in(90mm) core drill, drill a hole in the wall. Make sure that the hole is drilled at a slight downward angle, so that the outdoor end of the hole is lower than the indoor end by about 0.2-0.275in(5-7mm). This will ensure proper water drainage.

### NOTE:
### FOR CONCRETE OR BRICK WALLS

If the wall is made of brick, concrete, or similar material, drill 0.2in-diameter(5mm-diameter) holes in the wall and insert the sleeve anchors provided. Then secure the mounting plate to the wall by tightening the screws directly into the clip anchors.

### Step 2

Place the protective wall cuff in the hole. This protects the edges of the hole and will help seal it when you finish the installation process.

# Step 3 - Install Refrigerant pipe and Drain Hose

**NOTE**

The refrigerant piping is inside an insulating sleeve attached to the back of the unit. You must prepare the piping before passing it through the hole in the wall.

## Prepare refrigerant piping

### Step 1

Based on the position of the wall hole relative to the mounting plate, choose the side from which the piping will exit the unit(when you are facing the back of the unit). You have four options for the exit direction of the piping. The description of the piping angle below for details.

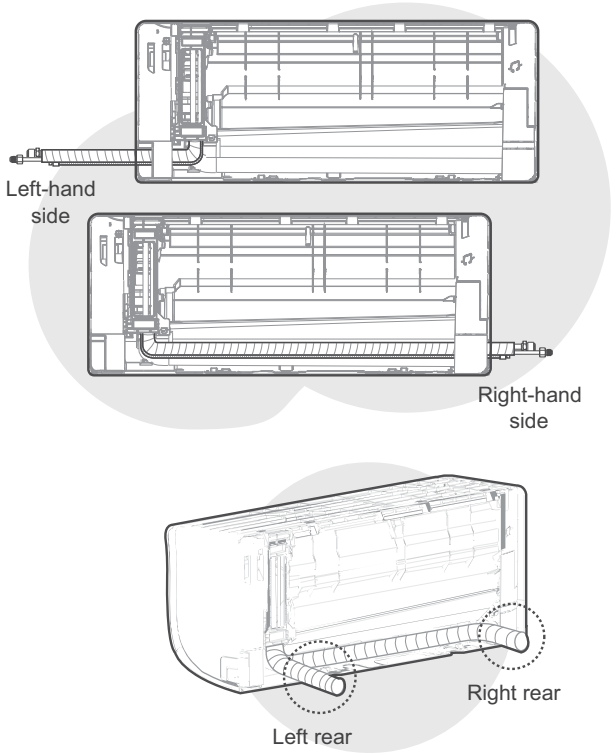


### Step 2

If the wall hole is behind the unit, keep the knock-out panel in place. If the wall hole is to the side of the indoor unit, remove the plastic knock-out panel from that side of the unit.Use scissors or pliers if the plastic panel is too difficult to remove by hand.

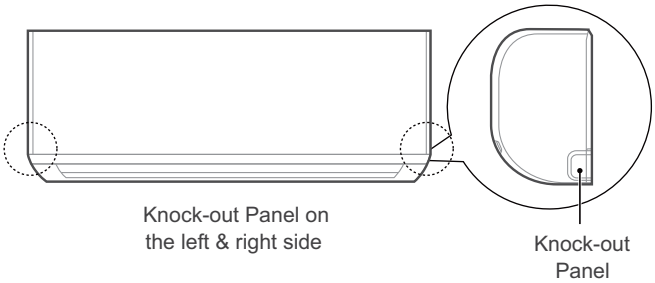


### Step 3

Connect the indoor unit's refrigerant piping to the connective piping that will join the indoor and outdoor units. Refer to the **Refrigerant Piping Connection** section of this manual for detailed instructions.

**NOTE** If existing connective piping is already embedded in the wall, proceed directly to the **Connect Drain Hose** step.

**⚠ CAUTION** Be extremely careful not to dent or damage the piping while bending them away from the unit. Any dents in the piping will affect the unit's performance.

## Connect drain hose

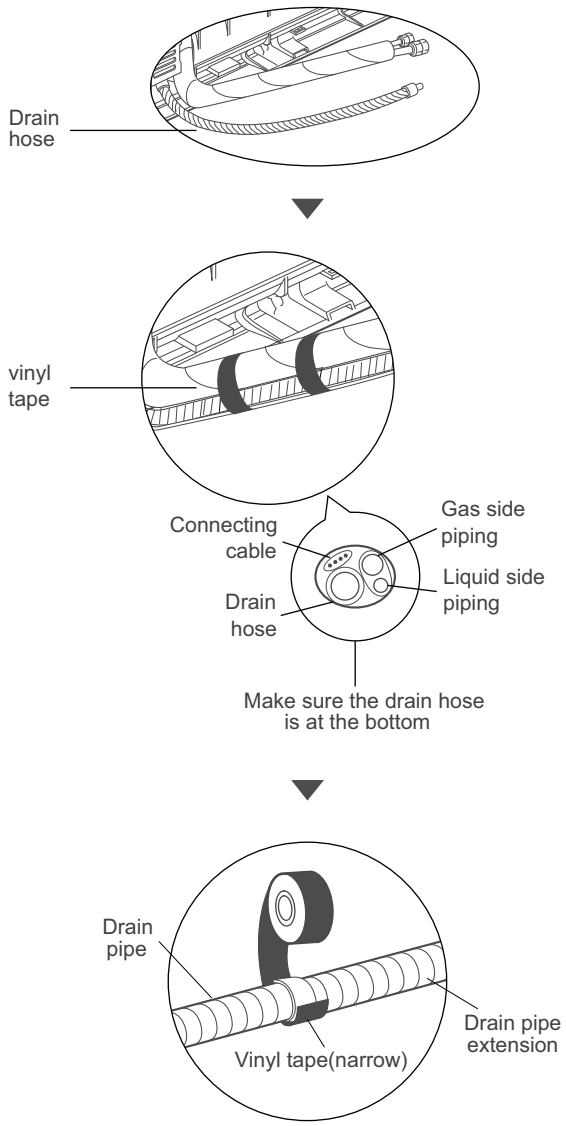


### Step 1

The drain hose can be attached to the left or right side To ensure proper drainage, attach the drain hose on the same side that your refrigerant piping exits the unit. Attach drain hose extension (purchased separately) to the end of drain hose.

- Wrap the connection point firmly with Teflon tape to ensure a good seal and to prevent leaks.
- For the portion of the drain hose that will remain indoors, wrap it with foam pipe insulation to prevent condensation.
- Remove the air filter and pour a small amount of water into the drain pan to make sure that water flows from the unit smoothly.

**NOTE ON DRAIN HOSE PLACEMENT**

Make sure to arrange the drain hose according to the following figures.

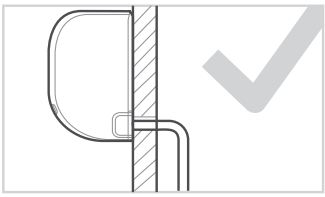

**CORRECT**

Make sure there are no kinks or dent in drain hose to ensure proper drainage.

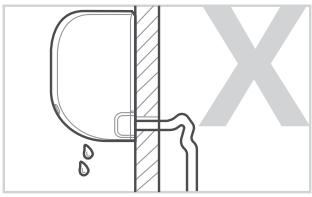

**NOT CORRECT**

Kinks in the drain hose will create water traps.

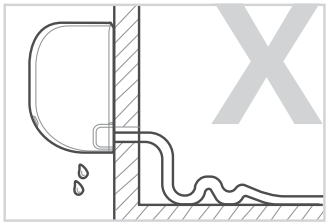

**NOT CORRECT**

Kinks in the drain hose will create water traps.

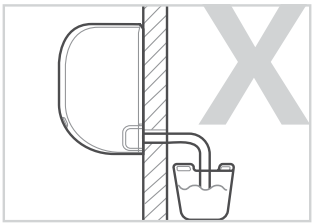

**NOT CORRECT**

Do not place the end of the drain hose in water or in containers that collect water. This will prevent proper drainage.

## ⚠ CAUTION

### PLUG THE UNUSED DRAIN HOLE

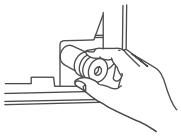

To prevent unwanted leaks you must plug the unused drain hole with the rubber plug provided.

# Step 4 - Electrical Work Preparation

**⚠ WARNING**

- **BEFORE PERFORMING ANY ELECTRICAL WORK, READ THESE REGULATIONS**
- **BEFORE PERFORMING ANY ELECTRICAL OR WIRING WORK, TURN OFF THE MAIN POWER TO THE SYSTEM.**

1. All wiring must comply with local and national electrical codes, regulations and must be installed by a licensed electrician.
2. All electrical connections must be made according to the Electrical Connection Diagram located on the panels of the indoor and outdoor units.
3. If there is a serious safety issue with the power supply, stop work immediately. Explain your reasoning to the client, and refuse to install the unit until the safety issue is properly resolved.
4. If connecting power to fixed wiring, a surge protector and main power switch should be installed.
5. Only connect the unit to an individual branch circuit outlet. Do not connect another appliance to that outlet.
6. Make sure to properly ground the air conditioner.
7. Every wire must be firmly connected. Loose wiring can cause the terminal to overheat, resulting in product malfunction and possible fire.
8. Do not let wires touch or rest against refrigerant tubing, the compressor, or any moving parts within the unit.
9. To avoid getting an electric shock, never touch the electrical components soon after the power supply has been turned off. After turning off the power, always wait 10 minutes or more before you touch the electrical components.

**⚠ WARNING**

All wiring must be performed strictly in accordance with the wiring diagram located on the back of the Indoor Unit's front panel.

## Connect signal and power cables

The signal cable enables communication between the indoor and outdoor units. You must first choose the right cable size before preparing it for connection.

NOTE: Choose the cable type according to the local electrical codes and regulations. Please choose the right cable size according to the Minimum Circuit Ampacity indicated on the nameplate of the unit.

**⚠ DO NOT MIX UP LIVE AND NULL WIRES**

This is dangerous, and can cause the air conditioning unit to malfunction.

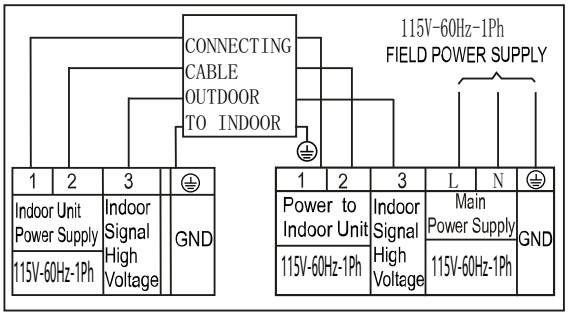


**Connection Diagram (115V)**

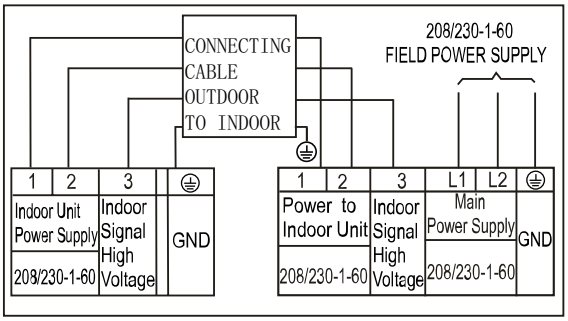


**Connection Diagram (208/230V)**

1. Open front panel of the indoor unit.
2. Using a screwdriver, open the wire box cover on the right side of the unit. This will reveal the terminal block.
3. Facing the back of the unit, remove the big plastic knock-out panel to create a slot through which the conduit tube can be installed.

**NOTE: For the units with five-core cable, remove the middle small plastic knock-out panel to create a slot through which the cable can exit. Use needle nose pliers if the plastic panel is too difficult to remove by hand**

4. As shown in Figure , insert the wires including the ground wire into the conduit and secure them with lock nut onto the conduit mounting plate.
5. Match wire colors with terminal numbers on indoor and outdoor unit's terminal blocks and firmly screw wires to the corresponding terminals.
6. Connect the ground wires to the corresponding terminals.
7. Pull the wires and check that the wires are securely fixed to the terminal block.

**WARNING**

**DO NOT MIX UP LIVE AND NULL WIRES**

This is dangerous, and can cause the air conditioning unit to malfunction.

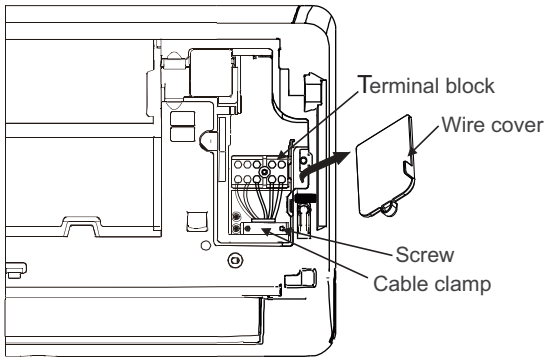


**Fig. 5 — Terminal Block**

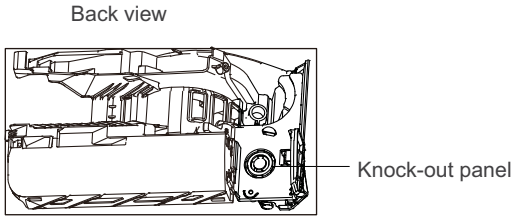


**Fig. 6 — Knock-Out Panel**

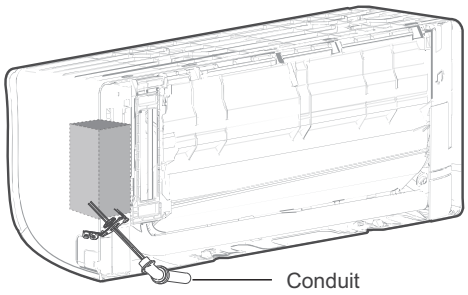


**Fig. 7 — Conduit**

# Step 5 - Wrap Piping and Cables

NOTE

Before passing the piping, and drain hose through the wall hole, you must bundle them together to save space, protect them, and insulate them.

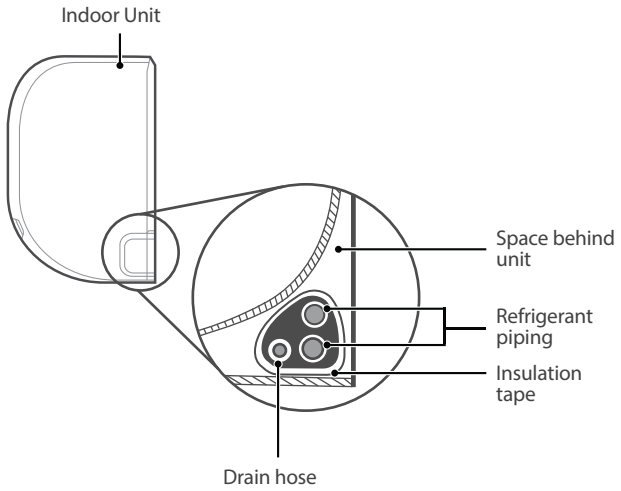


## Step 1 :

Bundle the drain hose, refrigerant pipes as shown above.

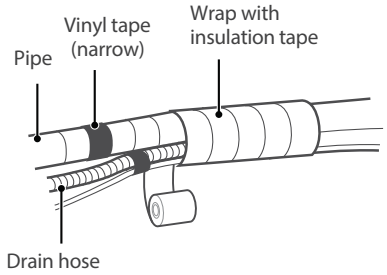


## Step 2 :

Using adhesive vinyl tape, attach the drain hose to the underside of the refrigerant pipes.

## Step 3 :

Using insulation tape, wrap the refrigerant pipes, and drain hose tightly together. Double-check that all items are bundled.

## DRAIN HOSE MUST BE ON BOTTOM

Make sure that the drain hose is at the bottom of the bundle. Putting the drain hose at the top of the bundle can cause the drain pan to overflow, which can lead to fire or water damage.

## DO NOT WRAP ENDS OF PIPING

When wrapping the bundle, keep the ends of the piping unwrapped. You need to access them to test for leaks at the end of the installation process (refer to Electrical Checks and Leak Checks section of this manual).

**Manufacturer reserves the right to change, at any time, specifications and designs without notice and without obligations.**

# Step 6 - Mount Indoor Unit

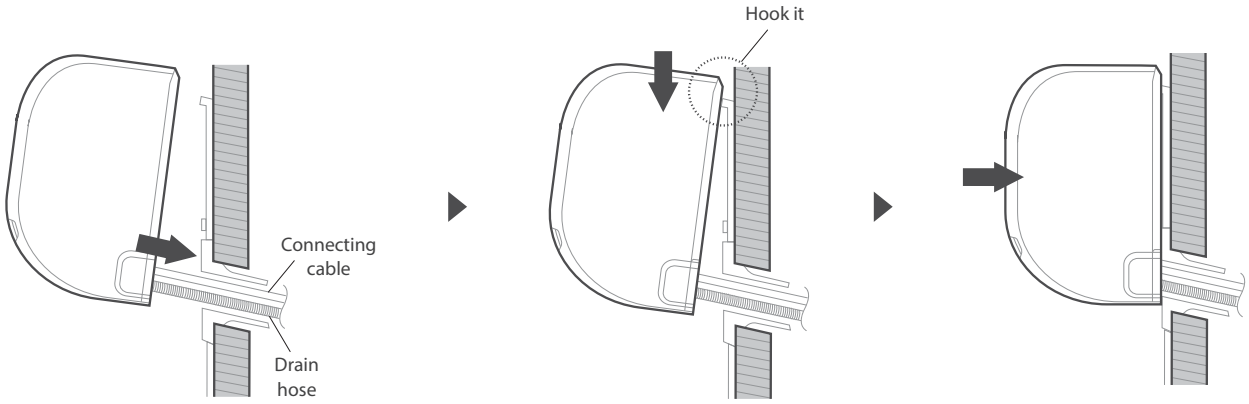


Put pipes in wall hole

Hook it and press down lightly to secure

Check that the unit is firmly mounted

If you installed new connective piping to the outdoor unit, do the following:

- If you have already passed the refrigerant piping through the hole in the wall, proceed to Step 4.
- Otherwise, double-check that the ends of the refrigerant pipes are sealed to prevent dirt or foreign materials from entering the pipes.
- Slowly pass the wrapped bundle of refrigerant pipes, drain hose, and signal wire through the hole in the wall.
- Hook the top of the indoor unit on the upper hook of the mounting plate.
- Check that unit is hooked firmly on mounting by applying slight pressure to the left and right-hand sides of the unit. The unit should not jiggle or shift.
- Using even pressure, push down on the bottom half of the unit. Keep pushing down until the unit snaps onto the hooks along the bottom of the mounting plate.
- Again, check that the unit is firmly mounted by applying slight pressure to the left and the right-hand sides of the unit.

⚠ CAUTION

For the units adopt the following pipe connectors, please strictly perform the piping work in accordance with the following instructions.

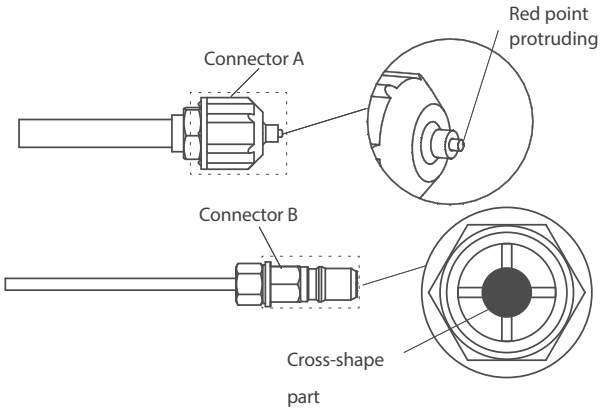


- Before performing the refrigerant piping connection, always wear work gloves and goggles, and remember that the connectors A and B are not allowed to face people directly.
- Keep pressing the cross-shape part of connector B with a tool for about 5~10 seconds until the red protuding point of connector A retracts completely.
- Remove connectors A and B, then perform the refrigerant piping connection between indoor unit and outdoor unit.

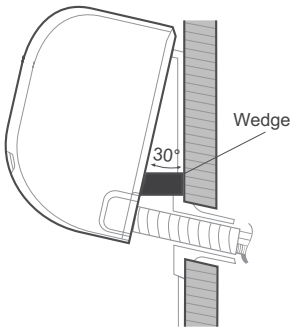


If refrigerant piping is already embedded in the wall, do the following:

- Hook the top of the indoor unit on the upper hook of the mounting plate.
- Use a bracket or wedge to prop up the unit, giving you enough room to connect the refrigerant piping, signal cable, and drain hose.
- Connect drain hose and refrigerant piping (refer to Refrigerant Piping Connection section of this manual for instructions).
- Keep pipe connection point exposed to perform the leak test (refer to Electrical Checks and Leak Checks section of this manual).
- After the leak test, wrap the connection point with insulation tape.
- Remove the bracket or wedge that is propping up the unit.
- Using even pressure, push down on the bottom half of the unit. Keep pushing down until the unit snaps onto the hooks along the bottom of the mounting plate.

## NOTE : UNIT IS ADJUSTABLE

Keep in mind that the hooks on the mounting plate are smaller than the holes on the back of the unit. If you find that you don't have ample room to connect embedded pipes to the indoor unit, the unit can be adjusted left or right by about 30-50mm (1.18-1.96in), depending on the model.

Move to left or right

## ⚠ CAUTION

For the units adopt the following pipe connectors, please strictly perform the piping work in accordance with the following instructions.

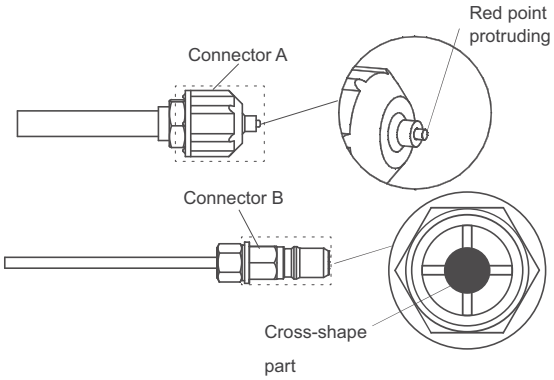


- Before performing the refrigerant piping connection, always wear work gloves and goggles, and remember that the connectors A and B are not allowed to face people directly.
- Keep pressing the cross-shape part of connector B with a tool for about 5~10 seconds until the red protuding point of connector A retracts completely.
- Remove connectors A and B, then perform the refrigerant piping connection between indoor unit and outdoor unit.

# CONNECTION INSTRUCTIONS - REFRIGERANT PIPING

## Step 1 - Cut Pipes

When preparing refrigerant pipes, take extra care to cut and flare them properly. This will ensure efficient operation and minimize the need for future maintenance.

- Measure the distance between the indoor and outdoor units.
- Using a pipe cutter, cut the pipe a little longer than the measured distance.
- Make sure that the pipe is cut at a perfect 90° angle.

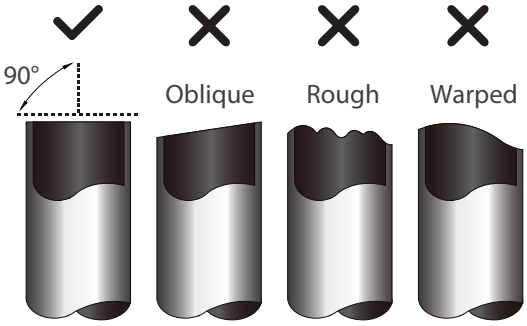


**WARNING**

DO NOT DEFORM PIPE WHILE CUTTING

Be extra careful not to damage, dent, or deform the pipe while cutting. This will drastically reduce the efficiency of the unit.

# Step 2 - Remove Burrs

⚠ CAUTION

MUST CHECK OVER THE END OF THE PIPE FOR CRACKS AND EVEN FLARING.
ENSURE THE PIPE IS SEALED.

## Step 2: Remove burrs

Burrs can affect the air-tight seal of refrigerant piping connection. Burrs must be completely removed.

- Hold the pipe at a downward angle to prevent burrs from falling into the pipe.
- Using a reamer or deburring tool, remove all burrs from the cut section of the pipe.

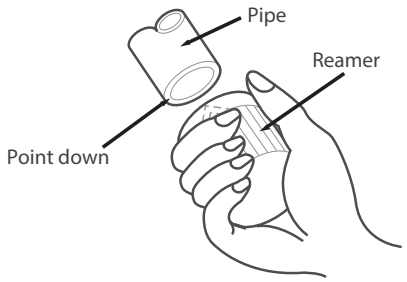


## Step 3: Flare pipe ends

Proper flaring is essential to achieve an airtight seal.

- After removing burrs from cut pipe, seal the ends with PVC tape to prevent foreign materials from entering the pipe.
- Sheath the pipe with insulating material.
- Place flare nuts on both ends of pipe. Make sure they are facing in the right direction, because you can not put them on or change their direction after flaring.

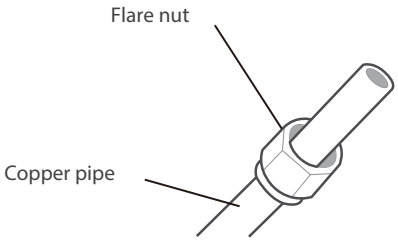


- Remove PVC tape from ends of pipe when ready to perform flaring work.
- Clamp flare form on the end of the pipe. The end of the pipe must extend beyond the edge of the flare form in accordance with the dimensions shown in the table below.

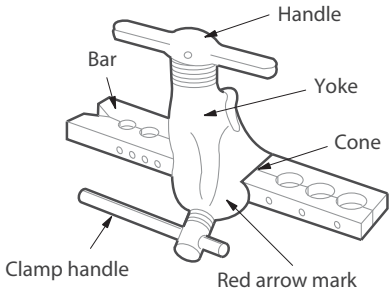


PIPING EXTENSION BEYOND FLARE FORM

| Outer Diameter of Pipe | A | |
|---|---|---|
| | Min. | Max. |
| Ø 1/4in (Ø 6.35mm) | 0.0275in(0.7mm) | 0.05in(1.3mm) |
| Ø 3/8in ( Ø 9.52mm) | 0.04in(1.0mm) | 0.063in(1.6mm) |
| Ø 5/8in ( Ø16mm) | 0.078in(2.0mm) | 0.086in(2.2mm) |

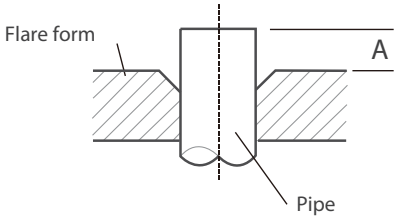


- Place the flaring tool onto the form.
- Turn the handle of the flaring tool clockwise until the pipe is fully flared.
- Remove the flaring tool and flare form, then inspect the end of the pipe for cracks and even flaring.

# Torque Requirement to Connect Pipes

## ⚠ CAUTION

WHEN CONNECTING REFRIGERANT PIPES, BE CAREFUL NOT TO USE EXCESSIVE TORQUE OR TO DEFORM THE PIPING IN ANY WAY. YOU SHOULD FIRST CONNECT THE LOW-PRESSURE PIPE, THEN THE HIGH-PRESSURE PIPE.

### MINIMUM BEND RADIUS

When bending connective refrigerant piping, the minimum bending radius is 4in(10cm).

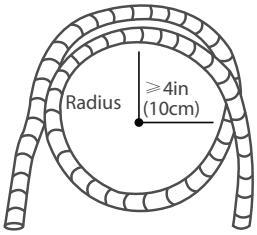


## Instructions for Connecting Piping to Indoor Unit

### Step 1 :

- Align the center of the two pipes that you will connect.

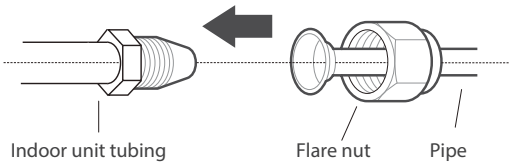


### Step 2 :

- Tighten the flare nut as tightly as possible by hand.
- Using a spanner, grip the nut on the unit tubing.
- While firmly gripping the nut on the unit tubing, use a torque wrench to tighten the flare nut according to the torque values in the Torque Requirements table below. Loosen the flaring nut slightly, then tighten again.

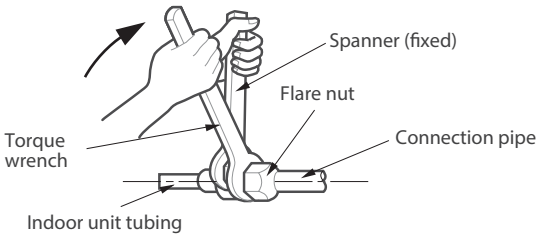


## TORQUE REQUIREMENTS

| Outer Diameter of Pipe | Tightening Torque | Flare Dimension(B) | Flare Shape |
|---|---|---|---|
| Ø 1/4in (Ø 6.35mm) | 13-15 ft-lb (18-20 n.m) | 0.33~0.34in (8.4~8.7mm) | 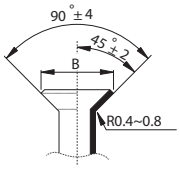  |
| Ø 3/8in ( Ø 9.52mm) | 24-29 ft-lb (32-39 n.m) | 0.52~0.53in (13.2~13.5mm) | |
| Ø 5/8in ( Ø 16mm) | 42-52 ft-lb (57-71 n.m) | 0.76~0.78in (19.2~19.7mm) | |

## ⊘ DO NOT USE EXCESSIVE TORQUE

Excessive force can break the nut or damage the refrigerant piping. You must not exceed torque requirements shown in the table above.

Manufacturer reserves the right to change, at any time, specifications and designs without notice and without obligations.

# Connecting Piping to the Outdoor Unit

**NOTE**

This section still needs to be operated according to the TORQUE REQUIREMENTS chart on the previous page.

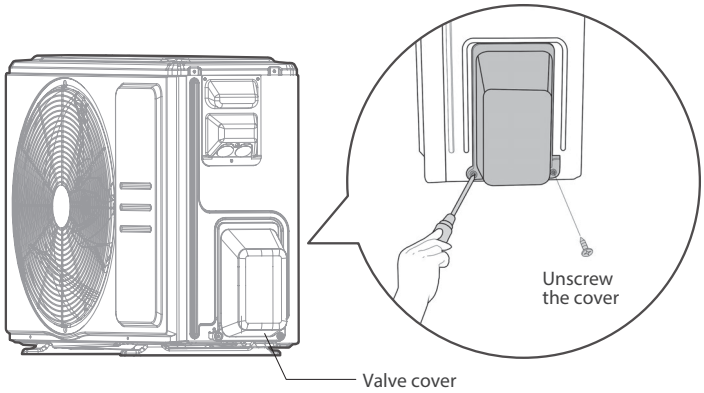


## Step 1 :

- Unscrew the cover from the packed valve on the side of the outdoor unit.

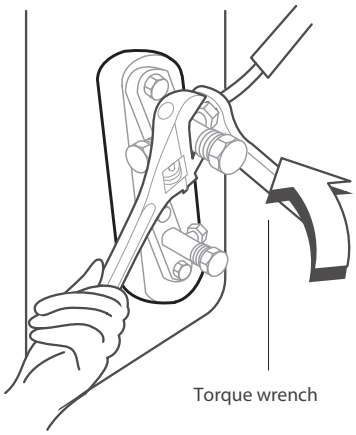


## Step 2 :

- Remove protective caps from ends of valves.
- Align flared pipe end with each valve, and tighten the flare nut as tightly as possible by hand.
- Using a spanner, grip the body of the valve. Do not grip the nut that seals the service valve.

USE SPANNER TO GRIP MAIN BODY OF VALVE

Torque from tightening the flare nut can snap off other parts of valve.

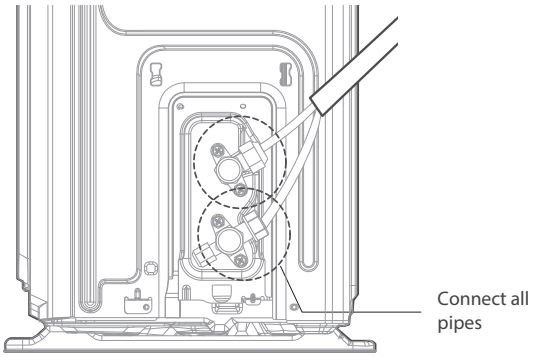


## Step 3 :

- While firmly gripping the body of the valve, use a torque wrench to tighten the flare nut according to the correct torque values.
- Loosen the flaring nut slightly, then tighten again.
- Repeat Steps 3 to 6 for the remaining pipe.

# WIRELESS REMOTE CONTROLLER INSTALLATION

**Fig. 8 — Wireless Remote (RG10R(2S)/BGEFU1)**

To attach the mounting bracket:

1. Use the two screws supplied with the wireless remote control to attach the mounting bracket to the wall in a location selected by the customer and within operating range.
2. Install the batteries in the remote control.
3. Place the remote control into the remote control mounting bracket.

**NOTE: For remote control operation, refer to the remote control's owners manual.**

# OPTIONAL WIRED WALL-MOUNTED REMOTE CONTROL INSTALLATION

The wired remote controller comes with the following items:

- A set of installation instructions and owner's manuals
- 3 M4X20 Screws to mount on the wall
- 4 wall plugs to mount on the wall
- 2 M4X25 to mount on switch box
- 2 plastic screw bars to fix on switch box
- 1 set of batteries
- 1 set of connecting wires to connect to indoor unit's main board

**Fig. 9 — Wired Controller (KSACN1401AAA)**

For wired controller set up and installation instructions, consult the wired controller installation manual.

# TROUBLESHOOTING

## Table 9 — Error Codes

| Display | Malfunction and Protection Indication |
|---|---|
| EC07 | ODU Fan Speed Out of Control |
| EC51 | ODU EEPROM Parameter Error |
| EC52 | ODU Coil Temperature Sensor(T3) error |
| EC53 | ODU Ambient Temperature Sensor (T4) Error |
| EC54 | COMP. Discharge Temperature Sensor (TP) Error |
| EC56 | IDU Coil Temperature Sensor (T2B) Error |
| EH00 | IDU EEPROM Malfunction |
| EH03 | IDU Fan Speed Out of Control |
| EH0A | IDU EEPROM Parameter Error |
| EH0E | Water Level Alarm Malfunction |
| EH12 | Main Unit or Secondary Units Malfunction |
| EH3A | External Fan DC bus voltage is too low protection |
| EH3b | External Fan DC bus voltage is too high fault |
| EH60 | IDU Room Temperature (T1) Error |
| EH61 | IDU Coil Temperature Sensor (T2) Error |
| EHba | Communication Error between the indoor unit and the external fan module |
| EL01 | IDU and ODU Communication Error |
| ELOC | System lacks refrigerant |
| EL11 | Communication Malfunction between the main and secondary units |
| FH07 | IDU lift panel communication failure/IDU opening and closing failure |
| PC00 | ODU IPM Module Protection |
| PC01 | ODU Voltage Protection |
| PC02 | Compressor To (or IPM Module Protection |
| PC03 | Pressure Protection (Low or High Pressure) |
| PC04 | Inverter Compressor Drive Error |
| PCOL | Low Ambient Temperate Protection |
| **NOTE:** The digital tube displays **FC** in the **FORCED COOLING** mode. **FC is NOT an error code.** *Applicable to the units with refrigerant sensors only. | |

**For additional diagnostic information, refer to the Service Manual.**

# COMMON ISSUES

**Table 10 — Common Issues**

| ISSUE | POSSIBLE CAUSE |
|---|---|
| Unit does not turn on when pressing **ON/OFF**. | The Unit has a 3-minute protection feature that prevents the unit from overloading. The unit cannot be restarted within three minutes of being turned off. |
| The unit changes from **COOL/HEAT** mode to **FAN** mode | The unit may change its setting to prevent frost from forming on the unit. Once the temperature increases, the unit starts operating in the previously selected mode again.<br>The set temperature has been reached, at which point the unit turns off the compressor. The unit continues operating when the temperature fluctuates again. |
| The indoor unit emits white mist | In humid regions, a large temperature difference between the room's air and the conditioned air can cause white mist. |
| The indoor unit makes noises | A rushing air sound may occur when the louver resets its position. |
| Both the indoor unit and outdoor unit make noises | Low hissing sound during operation: This is normal and is caused by refrigerant gas flowing through both indoor and outdoor units. |
| | Low hissing sound when the system starts, has just stopped running, or is defrosting: This noise is normal and is caused by the refrigerant gas stopping or changing direction. |
| | Squeaking sound: Normal expansion and contraction of plastic and metal parts caused by temperature changes during operation can cause squeaking noises. |
| The outdoor unit makes noises | The unit makes different sounds based on its current operating mode. |
| Dust is emitted from either the indoor or outdoor unit | The unit may accumulate dust during extended periods of non-use, which emits when the unit is turned on. This can be mitigated by covering the unit during long periods of inactivity. |
| The unit emits a bad odor | The unit may absorb odors from the environment (such as furniture, cooking, cigarettes, etc.) which emit during operations. |
| | The unit's filters have become moldy and should be cleaned. |
| The fan of the outdoor unit does not operate | During operation, the fan speed is controlled to optimize product operation. |
| Operation is erratic, unpredictable, or unit is unresponsive | Interference from cell phone towers and remote boosters may cause the unit to malfunction.<br>In this case, try the following:<br>• Disconnect the power, then reconnect.<br>• Press **ON/OFF** on the remote control to restart operation. |

**NOTE: If problem persists, contact a local dealer or your nearest customer service center. Provide them with a detailed description of the unit malfunction as well as your model number.**

**CAUTION**

When troubles occur, check the following points before contacting a repair company.

## Table 11 — Common Issues

| PROBLEM | POSSIBLE CAUSES | SOLUTION |
|---|---|---|
| Poor Cooling Performance | Temperature setting may be higher than ambient room temperature | Lower the temperature setting |
| | The air filter is dirty | Remove the filter and clean it according to instructions |
| | The air inlet or outlet of either unit is blocked | Turn the unit off, remove the obstruction and turn it back on |
| | Doors and windows are open | Make sure that all doors and windows are closed while operating the unit |
| | Excessive heat is generated by sunlight | Close windows and curtains during periods of high heat or bright sunshine |
| | Too many sources of heat in the room (people, computers, electronics, etc.) | Reduce amount of heat sources |
| | Low refrigerant due to leak or long-term use | Check for leaks, re-seal if necessary and top off refrigerant |
| | **SILENCE** function is activated (optional function) | **SILENCE** function can lower product performance by reducing operating frequency. Turn off **SILENCE** function. |
| The unit is not working | Power failure | Wait for the power to be restored |
| | The power is turned off | Turn on the power |
| | The fuse is burned out | Call service center to replace the fuse |
| | Remote control batteries are dead | Replace batteries |
| | The Unit's 3-minute protection has been activated | Wait three minutes after restarting the unit |
| | Timer is activated | Turn timer off |
| The unit starts and stops frequently | There's too much or too little refrigerant in the system | Call a service center to check for leaks and recharge the system with refrigerant. |
| | Incompressible gas or moisture has entered the system. | Call a service center to evacuate and recharge the system with refrigerant |
| | The compressor is broken | Call a service center to replace the compressor |
| | The voltage is too high or too low | Install a manostat to regulate the voltage |
| Indicator lamps continue flashing | The unit may stop operation or continue to run safely. If the indicator lamps continue to flash or error codes appear, wait for about 10 minutes. The problem may resolve itself.<br>If not, disconnect the power, then connect it again. Turn the unit on. If the problem persists, disconnect the power and contact your nearest customer service center. | |
| Error code appears and begins with the letters as the following in the window display of the indoor unit:<br>E(x), P(x), F(x)<br>EH(xx), EL(xx), EC(xx)<br>PH(xx), PL(xx), PC(xx) | | |

**NOTE: If your problem persists after performing the checks and diagnostics above, turn off your unit immediately and contact an authorized service center.**

# DUCTLESS START-UP CHECKLIST - Single Zone

## Installation Data

**Site Address:**_____

**City:**_____ **State:**_____ **Zip Code:**_____

**Installing Contractor**:_____ **Contractor Contact #:** (  ) _____-_____

**Job Name:**_____ **Start-up Date:**_____

**Distributor:**_____

## System Details

| UNITS | MODEL NO. | SERIAL NO. | CONTROLLER |
|---|---|---|---|
| OUTDOOR UNIT | | | |
| INDOOR UNIT A | | | |

Are the outdoor unit and indoor unit compatible? YES:_____ NO:_____

## Wiring Electrical

Wire Size and Type Used? AWG:_____ TYPE:_____

Are there any breaks, splices, wire nuts or butt connectors between the outdoor unit and the indoor unit? YES:_____ NO:_____

Was the wiring from the outdoor unit port to the correct indoor unit verified? YES:_____ NO:_____

**REMARKS:**_____

_____

## Voltage Check

**Wiring: Single Zone**

| | | | | | | |
|---|---|---|---|---|---|---|
| Outdoor Unit Disconnect | 1(L1):GND | | Outdoor Unit Terminal Block | 1(L1):GND | | NOTES:_____ |
| | 2(L2):GND | | | 2(L2):GND | | |
| | 1(L1):L2(2) | | | 1(L1):2(L2) | | |
| Indoor Unit Voltage Check @ Outdoor Unit | 1(L1):GND | | Indoor Unit Voltage Check @ Indoor Unit | 1(L1):GND | | NOTES:_____ |
| | 2(L2):GND | | | 2(L2):GND | | |
| | 1(L1):2(L2) | | | 1(L1):2(L2) | | |
| | 2(L2):3(S) | | | 2(L2):3(S) | | |

| | | | | | | |
|---|---|---|---|---|---|---|
| Outdoor Unit Disconnect | 1(L1):GND | | Outdoor Unit Terminal Block | 1(L1):GND | | NOTES:_____ |
| | 2(L2):GND | | | 2(L2):GND | | |
| | 1(L1):L2(2) | | | 1(L1):2(L2) | | |
| Indoor Unit Voltage Check @ Outdoor Unit | 1(L1):GND | | Indoor Unit Voltage Check @ Indoor Unit | 1(L1):GND | | NOTES:_____ |
| | 2(L2):GND | | | 2(L2):GND | | |
| | 1(L1):2(L2) | | | 1(L1):2(L2) | | |
| | 2(L2):3(S) | | | 2(L2):3(S) | | |

# Ductless Start-Up Checklist (CONT)

## Piping

**Leak Check:**
System held 500 psig (max. 550psi) for a minimum of 30 minutes using dry nitrogen. YES:_____ NO:_____

**Evacuation Method:**

- Was the Triple Evacuation Method used as outlined in the installation manual? YES:_____ NO:_____
- Was the Deep Vacuum Method used as outlined in the installation manual? YES:_____ NO:_____
- Did the System Hold 500 microns for 1 hour? YES:_____ NO:_____
- Does the line set match the diameter of the evaporator connections? YES:_____ NO:_____
- For Conventional Fan Coils, does the line set match the outdoor unit size? YES:_____ NO:_____

**Single Zone Piping:**
Has the liquid pipe length been measured and the additional charge calculated? Size:_____ Length:_____ Charge:_____

| NOTES: |
|---|
| |
| |
| |
| |

**NOTE: Final Charge Amount must be recorded!**

| PORT | LIQUID SIZE | | SUCTION SIZE | | LENGTH | CHARGE | NOTES:_____ |
|---|---|---|---|---|---|---|---|
| A | | | | | | | _____ |

## Performance Check

**For 1:1 Single Zone Systems:** Adjust the set-point to create an operational call for the desired testing operation. Allow the system to run for a minimum of 10 min. and record the following details:

(Operational data recorded on applicable heads with the wireless remote controller's Point Check function)

| UNIT | SET-POINT | MODE | T1 | T2 | T3 | T4 | Tb | Tp | Th | LA/Lr |
|---|---|---|---|---|---|---|---|---|---|---|
| A | | | | | | | | | | |

**NOTE:**

- T1 - Ambient Space Temperature Sensor
- T2 - IDU Coil Temperature Sensor
- T3 - Outdoor Coil Temperature Sensor
- T4 - Outdoor Ambient Temperature
- Tb - Suction Line Temperature @PMV
- Tp - Discharge Temperature Sensor
- Th - IPM Board Temperature
- LA/Lr - PMV Temperature

## Error Codes

Were there any error codes present at start-up?
YES:_____ NO:_____

| | | Notes: |
|---|---|---|
| Indoor Unit Error Code: | | |
| Outdoor Unit Error Code: | | |
| Wall Controller: | | |
| 24V Interface: | | |

## Comments:

_____
_____
_____
_____

© 2024 Carrier. All rights reserved.

**Manufacturer reserves the right to change, at any time, specifications and designs without notice and without obligations.**