50LC
Ultra High Efficiency
Cooling Only/Electric Heat Packaged Rooftop
3 to 5 Nominal Tons

Carrier
turn to the experts™

Product Data

WeatherExpert™

C11536

Carrier's Most Efficient Commercial Rooftop Ever!

TABLE OF CONTENTS

	PAGE
UNIT FEATURES	4
MODEL NUMBER NOMENCLATURE	5
FACTORY OPTIONS AND/OR ACCESSORIES	7
AHRI COOLING RATING TABLES	9
SOUND PERFORMANCE TABLE	10
PHYSICAL DATA	11
ELECTRIC HEAT DATA	12
CURBS & WEIGHTS DIMENSIONS	15
OPTIONS AND ACCESSORY WEIGHTS	19
APPLICATION DATA	20
COOLING TABLES	21
ECONO, BARO RELIEF & PE PERFORMANCE	27
STATIC PRESSURE ADDERS	27
FAN PERFORMANCE	29
ELECTRICAL INFORMATION	31
MCA/MOCP	37
SEQUENCE OF OPERATION	49
GUIDE SPECIFICATIONS	51

Carrier

turn to the experts

Carrier's rooftop units (RTU) are designed by customers for customers. These new WeatherExpert™ models are Carrier's highest efficient models ever produced and not only help reduce energy cost while providing comfort but they also help lower total cost of ownership.

Ultra high efficiency:

With SEER's up to 17.5, these new WeatherExpert models well exceed both ASHRAE 90.1 and Energy Star levels for operating efficiencies. The models also meet or exceed the latest Consortium for Energy Efficiency (CEE) Tier 2 levels. All help to reduce energy cost and help qualify for rebates and contribute to obtain LEED credits.

Easy to install:

All WeatherExpert units are field-convertible to horizontal air flow, which makes it easy to adjust to unexpected job-site complications. In fact, these new 3-5 ton 50LC rooftops fit on the same Carrier curbs dating back to 1989, making it ideal for replacement without replacing existing curbs or utilizing an adapter curb. Many factory and field installed options are also available that are pre-engineered and tested.

Easy to maintain:

Easy access handles by Carrier provide quick access to all normally serviced components. Our "no-strip" screw system has superior holding power and guides screws into position while preventing the screw from stripping the unit's metal. Take accurate pressure readings by reading condenser pressure with panels on. Simply remove the black, composite plug, route your gauge line(s) through the hole, and connect them to the refrigeration service valve(s). Now, you can take refrigeration system pressure readings without affecting the condenser airflow.

Easy to use:

The newly designed control box puts all your connections and troubleshooting points in one convenient place. Most low voltage connections are made to the same board and make it easy to find what you're looking for and easy to access it. Carrier rooftops have high and low pressure switches, a filter drier, and 2-in (51mm) filters standard.

Puron the environmentally sound refrigerant

ENERGY STAR

Certified System ISO 9001 QMI-SAI Global

CEE

AHRI CERTIFIED www.ahridirectory.org

Use of the AHRI Certified TM Mark indicates a manufacturer's participation in the program For verification of certification for individual products, go to www.ahridirectory.org.

c UL US

ASHRAE 90.1 COMPLIANT

CARRIER'S MOST EFFICIENT COMMERCIAL ROOFTOP EVER DESIGNED

Ideal for Replacement or New Construction

C12162

Fig. 1 - 50LC Front View

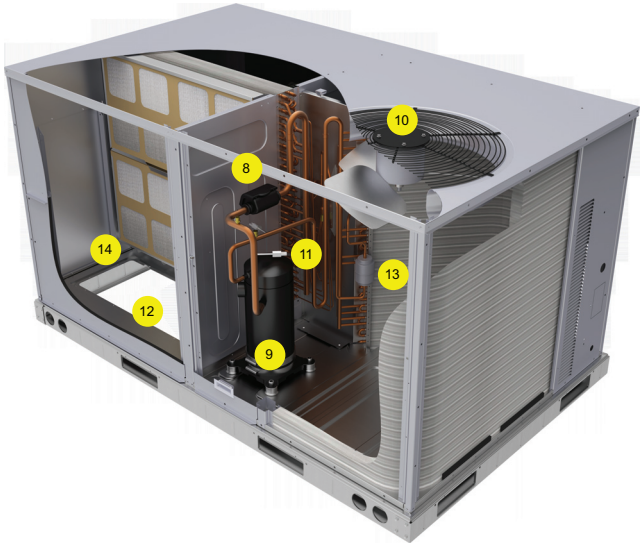

C12161

Fig. 2 - 50LC Rear View

1. Full perimeter base rails with built in rigging provisions. Unit has the same footprint as the current standard efficiency and high efficiency models. Units fit on the same Carrier roof curb dating back to the late 1980's making it ideal for replacement and new construction.
2. Electrical mechanical controls, RTU Open multi protocol or ComfortLink integrated controls that provides:
   - Scrolling marquee display
   - Reverse rotation protection
   - Service diagnostics and alarms
   - Alarm and run time history
   - Additional dehumidification fan speed control
3. High Efficient Direct Drive multi speed ECM indoor motor or Belt Drive system with Variable Frequency Drive (VFD) controller and display.
4. If required, electrical single point wiring kit facilitates both the electric heaters and unit wiring to one connection point.
5. High efficient round tube plate fin coils with optional special environmental coating. Factory or field installed hail guard protector grilles are also available.
6. A wide range of electric heater sizes, electrical voltages and stages are available, all of which are factory certified. Heater's Heather elements are made of nickel-chrome alloy.
7. Large access panels to all major components with no strip screw technology and handles. Tool-less filter access door. Optional hinged panels optional offering with quarter turn latches and lift tabs.
8. Precision sized Thermostatic Expansion Valve (TXV) provides optimum operation through the entire application range.
9. 2-Stage scroll compressor provides efficient and accurate temperature control. Combined with ComfortLink controls system can provide single zone VAV logic and operation.
10. High efficient direct drive ECM outdoor fan motor aids in unit overall high performance. Helps provide quiet operation with outdoor sound levels to 76 dB.
11. Full safety protected with high pressure, low pressure and over current/temperature.
12. Standard vertical supply and return air configuration can be easily field converted to horizontal supply and return air with no special kits.
13. High capacity solid core filter drier for added refrigerant system protection.
14. Non corrosive, composite material condensate pan/drain system. Designed in accordance with ASHRAE 62 standard, sloping design with side and center drain connections.

UNIT FEATURES

- Two stage cooling capacity control scroll compressors with crankcase heater
- Belt drive indoor fan and pulley system with Variable Frequency Drive (VFD) motor controller and display or direct drive (multi speed/torque) ECM motor.
- SEER up to 17.5 with direct drive ECM indoor fan motor, up to 16.5 SEER with belt drive/VFD indoor fan motor
- Electro-mechanical controls that provide cooling operation down to 10°F (-12°C)
- Optional ComfortLink Controls that provide cooling operation down to 0°F (-18°C) and:
  - Communications via standalone thermostat or sensor
  - Scrolling marquee visual display
  - Time schedule capabilities
  - Reverse rotation protection
- Exclusive non-corrosive composite condensate pan in accordance with ASHRAE 62 Standard, sloping design; side or center drain
- Single point electrical connection
- Pre-painted exterior panels and primer-coated interior panels tested to 500 hours salt spray protection
- TXV refrigerant metering system on each circuit
- Fully insulated cabinet with foil faced insulation throughout the entire cabinet.
- Cooling operating range up to 125°F (52°C)
- Access panels with easy grip handles
- Innovative , easy starting, no-strip screw feature on unit access panels
- Two-inch disposable return air filters
- Tool-less filter access door
- New terminal board facilitating simple safety circuit troubleshooting and simplified control box arrangement
- Field Convertible airflow (3-5 ton). Being able to convert a unit from vertical airflow to horizontal makes it easy to overcome job site complications.
- Provisions for thru-the-bottom power entry capability as standard
- Full perimeter base rail with built-in rigging adapters and fork truck slots
- 24-volt control circuit protected with resettable circuit breaker
- Permanently lubricated evaporator-fan motor
- Totally enclosed high efficient ECM outdoor fan motor with permanently lubricated bearings
- Low Pressure switch and high-pressure switch protection
- Liquid line filter drier on each circuit
- Standard Limited Warranty: 5 yr. Electric heater exchanger, 5 yr compressor, 3 yr. ComfortLink controller, 1 yr parts

MODEL NUMBER NOMENCLATURE

1	2	3	4	5	6	7	8	9	10	11	12	13	14	15	16	17	18
5	0	L	C	0	0	0	5	A	2	A	5	–	0	A	0	A	0

Unit Type
50 = Electric Cooling Packaged Rooftop

Model Series – WeatherExpert
LC = Ultra High Efficiency

Heat Size
0 = Standard, No Electric Heat
D = Low Electric Heat
E = Medium Electric Heat
F = High Electric Heat

Refrig. System Options
0 = 2 stage capacity control scroll compressor With TXV metering device

Nominal Cooling Tons
04 = 3 Ton
05 = 4 Ton
06 = 5 Ton

Sensor Options
A = None
B = RA smoke detector
C = SA smoke detector
D = RA & SA smoke detector
E = CO_2 sensor
F = RA smoke detector & CO_2
G = SA smoke detector & CO_2
H = RA & SA smoke detector & CO_2

Indoor Fan Options
0 = Standard Electric Direct Drive ECM Motor
2 = Medium Static Belt Drive with VFD Controller and Display
3 = High Static Belt Drive with VFD Controller and Display

Coil Options (Outdoor – Indoor – Hailguard)
A = Al/Cu – Al/Cu
B = Precoat Al/Cu – Al/Cu
C = E coat Al/Cu – Al/Cu
D = E coat Al/Cu – E coat Al/Cu
E = Cu/Cu – Al/Cu
F = Cu/Cu – Cu/Cu
M = Al/Cu – Al/Cu – Louvered Hail Guard
N = Precoat Al/Cu – Al/Cu – Louvered Hail Guard
P = E – coat Al/Cu – Al/Cu – Louvered Hail Guard
Q = E – coat Al/Cu – E – coat Al/Cu – Louvered Hail Guard
R = Cu/Cu – Al/Cu – Louvered Hail Guard
S = Cu/Cu – Cu/Cu – Louvered Hail Guard

Voltage
1 = 575/3/60
5 = 208 – 230/3/60
6 = 460/3/60

Design Rev
– Factory design revision

Base Unit Controls
0 = Base Electromechanical
1 = RTU Open Multi protocol controller
2 = ComfortLink Controls

Air Intake / Exhaust Options
A = None
B = Temp econo w/ baro relief
E = Enthalphy econo w/ baro relief

Service Options
0 = None
1 = Unpowered convenience outlet
2 = Powered convenience outlet
3 = Hinged panels
4 = Hinged panels, unpwrd conv outlet
5 = Hinged panels, pwrd conv outlet

Electrical Options
A = None
B – HACR breaker
C = Non – fused disconnect
D = Thru the base connections
E = HACR breaker & thru the base
F = Non – fused & thru the base

Brand / Packaging
0 = Standard
1 = LTL

Table 1 – FACTORY-INSTALLED OPTIONS AND FIELD-INSTALLED ACCESSORIES

CATEGORY	ITEM	FACTORY INSTALLED OPTION	FIELD INSTALLED ACCESSORY
Cabinet	Thru–the–base electrical connections	X	X
	Hinged access panels	X	
Coil Options	Cu/Cu indoor and/or outdoor coils	X	
	Pre–coated outdoor coils	X	
	Premium, E–coated outdoor coils	X	
Condenser Protection	Condenser coil hail guard (louvered design)	X	X
Controls	Thermostats, temperature sensors, and subbases		X
	RTU Open multi–protocol controller	X	
	ComfortLink Controls	X	
	Smoke detector (supply and/or return air)	X	
	Time Guard II compressor delay control circuit		X
	Phase Monitor		X
Economizers & Outdoor Air Dampers	EconoMi$er X	X	X
	EconoMi$er2 (for DDC controlled RTUs)	X	X
	Barometric relief[1]	X	X
	Power exhaust		X
Economizer Sensors & IAQ Devices	Single dry bulb temperature sensors[2]	X	X
	Differential dry bulb temperature sensors[2]		X
	Single enthalpy sensors[2]	X	X
	Differential enthalpy sensors[2]		X
	CO_2 sensor (wall, duct, or unit mounted)[2]	X	X
Electric Heat	Electric Resistance Heaters	X	X
	Single Point Kit	X	X
Indoor Motor & Drive	Multiple motor and drive packages	X	
Power Options	Convenience outlet (powered)[3]	X	
	Convenience outlet (unpowered)	X	
	HACR Circuit Breaker[4]	X	
	Non–fused disconnect[5]	X	
Roof Curbs	Roof curb 14–in (356mm)		X
	Roof curb 24–in (610mm)		X

NOTES:
1. Included with economizer.
2. Sensors used to optimize economizer performance.
3. Not available on 575 volt models.
4. On 575V applications, HACR breaker can only be used with WYE power distribution systems. Using on Delta power distribution systems is prohibited.
5. On 208/230–360 units with FIOP Non–Fused Disconnect, and accessory CRSINGLE037A00 Single Point Box may be required. Refer to Electric Heat–Electrical Data Table for more information.

FACTORY OPTIONS AND/OR ACCESSORIES

Economizer (dry-bulb or enthalpy)

Economizers save money. They bring in fresh, outside air for ventilation; and provide cool, outside air to cool your building. This is the preferred method of low-ambient cooling. When coupled to CO_2 sensors, Economizers can provide even more savings by coupling the ventilation air to only that amount required.

Economizers are available, installed and tested by the factory, with either enthalpy or dry-bulb temperature inputs. There are also models for electromechanical as well as direct digital controllers. Additional sensors are available as accessories to optimize the economizers.

Economizers include gravity controlled, barometric relief equalizes building pressure and ambient air pressures. This can be a cast effective solution to prevent building pressurization.

CO_2 Sensor

Improves productivity and saves money by working with the economizer to intake only the correct amount of outside air for ventilation. As occupants fill your building, the CO_2 sensor detects their presence through increasing CO_2 levels, and opens the economizer appropriately.

When the occupants leave, the CO_2 levels decrease, and the sensor appropriately closes the economizer. This intelligent control of the ventilation air, called Demand Control Ventilation (DCV) reduces the overall load on the rooftop, saving money.

Smoke Detectors

Trust the experts. Smoke detectors make your application safer and your job easier. Carrier smoke detectors immediately shut down the rooftop unit when smoke is detected. They are available, installed by the factory, for supply air, return air, or both.

Louvered Hail Guards

Sleek, louvered panels protect the condenser coil from hail damage, foreign objects, and incidental contact.

Convenience Outlet (powered or un-powered)

Reduce service and/or installation costs by including a convenience outlet in your specification. Carrier will install this service feature at our factory. Provides a convenient, 15 amp, 115v GFCI receptacle with “Wet in Use” cover. The “powered” option allows the installer to power the outlet from the line side of the disconnect or load side as required by code. The “unpowered” option is to be powered from a separate 115/120v power source.

Non-fused Disconnect

This OSHA-compliant, factory-installed, safety switch allows a service technician to locally secure power to the rooftop.

Power Exhaust with Barometric Relief.

Superior internal building pressure control. This field-installed accessory may eliminate the need for costly, external pressure control fans.

RTU Open, Multi-protocol Controller

Connect the rooftop to an existing BAS without needing complicated translators or adapter modules using the RTU Open controller. This new controller speaks the 4 most common building automation system languages (Bacnet, Modbus, N2, and Lonworks). Use this controller when you have an existing BAS. Besides the 4 protocols, it also communicates with a Carrier Open system (I-Vu and VVT).

Time Guard II Control Circuit

This accessory protects your compressor by preventing short-cycling in the event of some other failure, prevents the compressor from restarting for 30 seconds after stopping. Not required RTU-MP, or authorized commercial thermostats.

Manual OA Damper & Two Position Dampers

Both Manual and Two Position Dampers are not recommended due to the control logic required for the 2-Speed indoor fan system for maintaining proper ventilation requirements. Contact application engineering for more details.

Hinged Access Panels

Allows access to unit’s major components with specifically designed hinged access panels. Panels are: filter, control box, fan motor and compressor. Comes with quarter turn latches and lift tabs.

Alternate Motors and Drives

Some applications need larger horsepower motors, some need more airflow, and some need both. Regardless of the case, your Carrier expert has a factory installed combination to meet your application. A wide selection of motors and pulleys (drives) are available, factory installed, to handle nearly any application.

Thru-the-Base Connections

Thru-the-base connections, available as either an accessory or as a factory option, are necessary to ensure proper connection and seal when routing wire and piping through the rooftop's basepan and curb. These couplings eliminate roof penetration and should be considered for gas lines, main power lines, as well as control power.

Electric Heaters

Carrier offers a full-line of field-installed accessory heaters. The heaters are very easy to use, install and are all pre-engineered and certified.

HACR Breaker

These manual reset devices provide overload and short circuit protection for the unit. Factory wired and mounted with the units with access cover to help provide environment protection.

On 575V applications, HACR breaker can only be used with WYE power distribution systems. Use on Delta power distribution systems is prohibited.

ComfortLink Controls

Models with Carrier ComfortLink Controls allows added unit diagnostics and operation set up capabilities as well as controlling logic for single zone variable air volume (SZ-VAV) applications.

The ComfortLink control is your link to a world of simple and easy to use rooftop units that offer outstanding performance and value. When used with a space temperature sensor, the ComfortLink control's intelligence maintains control over the economizer and condenser fans. It optimizes the performance of the refrigeration circuits as conditions change, resulting in the following features:

- Better control of temperature and humidity
- Superior reliability
- Automatic redundancy
- Low ambient cooling operation to 0°F
- More accurate diagnostics, at unit or remote

The ComfortLink Scrolling Marquee is very easy to use. The messages are displayed in easy to understand English, no decoding is required. A scrolling readout provides detailed explanations of control information. Only four, large, easy-to-use buttons are required to maneuver through the entire menu. The readout is designed to be visible even in the brightest sunlight. A handheld Navigator accessory or wall-mounted System Pilot™ accessory can be used for added service flexibility.

The ComfortLink control provides unparalleled service diagnostic information. Temperature and pressure can be read directly from the display with no need for separate gauges. Other data, such as compressor cycles, unit run time hours, current alarms, can also be accessed. A history of alarms is also available for viewing.

The service run test can be very helpful when troubleshooting. The user can run test major components to determine the root cause of a problem. The unit can be run-tested before an installation is complete to ensure satisfactory start-up. To ensure reliability, the ComfortLink control prevents reverse compressor rotation. No laptop computers are required for start-up.

Time schedules are built in and the Scrolling Marquee display provides easy access to setpoints. The ComfortLink control accepts input from a CO2 sensor and a smoke detector. Both are available as factory installed options or as field installed accessories.

Table 2 – AHRI COOLING RATING TABLE 2-STAGE COOLING W/DIRECT DRIVE ECM INDOOR MOTOR

50LC	COOLING STAGES	NOM. CAPACITY (TONS)	NET COOLING CAPACITY (MBH)	TOTAL POWER (kW)	SEER	EER
04	2	3	35.6	2.8	17.1	12.8
05	2	4	47.5	3.6	17.5	13.1
06	2	5	58.5	4.6	17.2	12.7

Table 3 – AHRI COOLING RATING TABLE 2-STAGE COOLING WITH BELT DRIVE INDOOR MOTOR

50LC	COOLING STAGES	NOM. CAPACITY (TONS)	NET COOLING CAPACITY (MBH)	TOTAL POWER (kW)	SEER	EER
04	2	3	34.6	2.9	15.5	12.0
05	2	4	46.5	3.7	16.4	12.6
06	2	5	58.0	4.7	16.2	12.3

LEGEND

– – Not Applicable
AHRI – Air Conditioning, Heating and Refrigeration Institute Test Standard
ASHRAE – American Society of Heating, Refrigerating and Air Conditioning, Inc.
EER – Energy Efficiency Ratio
SEER – Seasonal Energy Efficiency Ratio

NOTES:

1. Rated in accordance with AHRI Standards.
2. Ratings are based on:
   Cooling Standard: 80°F (27°C) db, 67°F (19°C) wb indoor air temp and 95°F (35°C) db outdoor air temp.
3. All 50LC units comply with ASHRAE 90.1 Energy Standard for minimum SEER and EER requirements.
4. 50LC units comply with US Energy Policy Act. To evaluate code compliance requirements, refer to state and local codes.

Table 4 – MINIMUM - MAXIMUM AIRFLOWS ELECTRIC HEAT

50LC	COOLING		ELECTRIC HEATERS	
	Minimum	Maximum	Minimum	Maximum
50LC*004	900	1500	900	1500
50LC*005	1200	2000	1200	2000
50LC*006	1500	2500	1500	2500

Table 5 – SOUND PERFORMANCE TABLE

50LC	OUTDOOR SOUND (dB) AT 60								
	A–WEIGHTED	63	125	250	500	1000	2000	4000	8000
04	76	78.2	78.0	74.2	73.3	70.6	66.0	62.4	56.9
05	78	84.7	83.6	77.1	74.6	72.3	68.3	64.7	60.9
06	77	87.5	82.5	76.1	73.6	71.3	67.1	64.1	60.0

LEGEND

dB – Decibel

NOTES:

1. Outdoor sound data is measure in accordance with AHRI.
2. Measurements are expressed in terms of sound power. Do not compare these values to sound pressure values because sound pressure depends on specific environmental factors which normally do not match individual applications. Sound power values are independent of the environment and therefore more accurate.
3. A–weighted sound ratings filter out very high and very low frequencies, to better approximate the response of “average” human ear. A–weighted measurements for Carrier units are taken in accordance with AHRI.

Table 6 – PHYSICAL DATA (COOLING) 3 - 5 TONS

	50LC*004	50LC*005	50LC*006
Refrigeration System			
# Stages / # Comp. / Type	2 / 1 / Scroll	2 / 1 / Scroll	2 / 1 / Scroll
R–410A charge A/B (lbs – oz)	9 – 2	9 – 0	11 – 0
Metering device	TXV	TXV	TXV
High–press. Trip / Reset (psig)	630 / 505	630 / 505	630 / 505
Low–press. Trip / Reset (psig)	27 / 44	27 / 44	27 / 44
Evaporator Coil			
Material	Cu / Al	Cu / Al	Cu / Al
Coil type	3/8–in RTPF	3/8–in RTPF	3/8–in RTPF
Rows / FPI	3 / 15	3 / 15	4 / 15
Total Face Area (ft^2)	5.5	7.3	7.3
Condensate Drain Connection Size	3/4–in	3/4–in	3/4–in
Evaporator fan and motor			
Standard Static			
Motor Qty / Drive type	1 / Direct–ECM	1 / Direct–ECM	1 / Direct–ECM
Max BHP	1	1	1
RPM range	600–1200	600–1200	600–1200
Motor Frame Size	48	48	48
Fan Qty / Type	1 / Centrifugal	1 / Centrifugal	1 / Centrifugal
Fan Diameter (in)	10 x 10	10 x 10	11 x 10
Medium Static			
Motor Qty / Drive type	1 / Belt w/VFD	1 / Belt w/VFD	1 / Belt w/VFD
Max BHP	1.7	1.7	2.4
RPM range	770–1175	920–1303	1035–1466
Motor Frame Size	56	56	56
Fan Qty / Type	1 / Centrifugal	1 / Centrifugal	1 / Centrifugal
Fan Diameter (in)	10 x 10	10 x 10	10 x 10
High Static			
Motor Qty / Drive type	1 / Belt w/VFD	1 / Belt w/VFD	1 / Belt w/VFD
Max BHP	2.4	2.9	2.9
RPM range	1035–1466	1208–1639	1303–1687
Motor Frame Size	56	56	56
Fan Qty / Type	1 / Centrifugal	1 / Centrifugal	1 / Centrifugal
Fan Diameter (in)	10 x 10	10 x 10	10 x 10
Condenser Coil			
Material	Cu / Al	Cu / Al	Cu / Al
Coil type	7mm RTPF	7mm RTPF	7mm RTPF
Rows / FPI	2 / 20	2 / 20	2 / 20
Total Face Area (ft2)	16.4	21.4	21.4
Condenser fan / motor			
Qty / Motor drive type	1 / Direct–ECM	1 / Direct–ECM	1 / Direct–ECM
Motor HP / RPM	1/3 / 1001	1/3 / 1082	1/3 / 1082
Fan diameter (in)	22	22	22
Filters			
RA Filter # / size (in)	2 / 16 x 25 x 2	4 / 16 x 16 x 2	4 / 16 x 16 x 2
OA inlet screen # / size (in)	1 / 20 x 24 x 1	1 / 20 x 24 x 1	1 / 20 x 24 x 1

Table 7 – ELECTRIC HEAT - ELECTRICAL DATA

50LC*004
3 TONS

NOM. V–Ph–Hz	IFM TYPE	ELECTRIC HEATER PART NUMBER CRHEATER	NOM PWR (kW)	APP PWR (kW)	SINGLE POINT KIT PART NUMBER CRSINGLEXXXA00			
					NO C.O. or UNPWRD C.O.		w/PWRD C.O.	
					NO P.E.	w/ P.E. (pwrd fr/unit)	NO P.E.	w/ P.E. (pwrd fr/unit)
208/ 230–3–60	DD–STD	101A00	4.4	3.3/4.0	–*	–*	–*	–*
		102A00	6.5	4.9/6.0	–*	–*	–*	–*
		103B00	8.7	6.5/8.0	–*	–*	–*	–*
		104B00	10.5	7.9/9.6	–*	–*	–*	–*
		105A00	16.0	12.0/14.7	037	037	038	038
	MED	101A00	4.4	3.3/4.0	–*	–*	–*	–*
		102A00	6.5	4.9/6.0	–*	–*	–*	–*
		103B00	8.7	6.5/8.0	–*	–*	–*	–*
		104B00	10.5	7.9/9.6	–*	–*	–*	–*
		105A00	16.0	12.0/14.7	037	037	038	038
	HIGH	101A00	4.4	3.3/4.0	–*	–*	–*	–*
		102A00	6.5	4.9/6.0	–*	–*	–*	–*
		103B00	8.7	6.5/8.0	–*	–*	–*	–*
		104B00	10.5	7.9/9.6	–*	–*	–*	–*
		105A00	16.0	12.0/14.7	037	037	038	038
460–3–60	DD–STD	106A00	6.0	5.5	–	–	–	–
		107A00	8.8	8.1	–	–	–	–
		108A00	11.5	10.6	–	–	–	–
		109A00	14.0	12.9	–	–	–	–
	MED	106A00	6.0	5.5	–	–	–	–
		107A00	8.8	8.1	–	–	–	–
		108A00	11.5	10.6	–	–	–	–
		109A00	14.0	12.9	–	–	–	–
	HIGH	106A00	6.0	5.5	–	–	–	–
		107A00	8.8	8.1	–	–	–	–
		108A00	11.5	10.6	–	–	–	–
		109A00	14.0	12.9	–	–	–	–
575–3–60	DD–STD	297A00	9.2	9.2	–	–	–	–
		298A00	13.8	13.8	–	–	–	–
	MED	297A00	9.2	9.2	–	–	–	–
		298A00	13.8	13.8	–	–	–	–
	HIGH	297A00	9.2	9.2	–	–	–	–
		298A00	13.8	13.8	–	–	–	–

* On 208/230–3–60 units with FIOP Non–Fused Disconnect, an accessory CRSINGLE037A00 Single Point box must be used where the above table shows dashes "–". The single point box contains the terminal block necessary to connect the non–fused disconnect load side wires and electric heat power wires.

LEGEND

APP PWR – 208 / 230V / 460V / 575V
DD – Direct drive
BD – Belt drive
C.O. – Convenient outlet
FLA – Full load amps
IFM – Indoor fan motor
NOM PWR – 240V / 480V / 600V
P.E. – Power exhaust
PWRD – Powered convenient outlet
UNPWRD – Unpowered convenient outlet

Table 8 – ELECTRIC HEAT - ELECTRICAL DATA

NOM. V–Ph–Hz	IFM TYPE	ELECTRIC HEATER PART NUMBER CRHEATER	NOM PWR (kW)	APP PWR (kW)	SINGLE POINT KIT PART NUMBER CRSINGLEXXXA00			
					NO C.O. or UNPWRD C.O.		w/PWRD C.O.	
					NO P.E.	w/ P.E. (pwrd fr/unit)	NO P.E.	w/ P.E. (pwrd fr/unit)
208/ 230–3–60	DD–STD	102A00	6.5	4.9/6.0	–*	–*	–*	–*
		103B00	8.7	6.5/8.0	–*	–*	–*	–*
		105A00	16.0	12.0/14.7	037	037	038	038
		104B00,104B00	21.0	15.8/19.3	038	038	038	038
	MED	102A00	6.5	4.9/6.0	–*	–*	–*	–*
		103B00	8.7	6.5/8.0	–*	–*	–*	–*
		105A00	16.0	12.0/14.7	037	037	038	038
		104B00,104B00	21.0	15.8/19.3	038	038	038	038
	HIGH	102A00	6.5	4.9/6.0	–*	–*	–*	–*
		103B00	8.7	6.5/8.0	–*	–*	–*	–*
		105A00	16.0	12.0/14.7	037	038	038	038
		104B00,104B00	21.0	15.8/19.3	038	038	038	038
460–3–60	DD–STD	106A00	6.0	5.5	–	–	–	–
		108A00	11.5	10.6	–	–	–	–
		109A00	14.0	12.9	–	–	–	–
		108A00,108A00	23.0	21.1	037	037	037	037
	MED	106A00	6.0	5.5	–	–	–	–
		108A00	11.5	10.6	–	–	–	–
		109A00	14.0	12.9	–	–	–	–
		108A00,108A00	23.0	21.1	037	037	037	037
	HIGH	106A00	6.0	5.5	–	–	–	–
		108A00	11.5	10.6	–	–	–	–
		109A00	14.0	12.9	–	–	–	–
		108A00,108A00	23.0	21.1	037	037	037	037
575–3–60	DD–STD	297A00	9.2	9.2	–	–	–	–
		298A00	13.8	13.8	–	–	–	–
	MED	297A00	9.2	9.2	–	–	–	–
		298A00	13.8	13.8	–	–	–	–
	HIGH	297A00	9.2	9.2	–	–	–	–
		298A00	13.8	13.8	–	–	–	–

* On 208/230–3–60 units with FIOP Non–Fused Disconnect, an accessory CRSINGLE037A00 Single Point box must be used where the above table shows dashes "–". The single point box contains the terminal block necessary to connect the non–fused disconnect load side wires and electric heat power wires.

LEGEND

APP PWR – 208 / 230V / 460V / 575V
DD – Direct drive
BD – Belt drive
C.O. – Convenient outlet
FLA – Full load amps
IFM – Indoor fan motor
NOM PWR – 240V / 480V / 600V
P.E. – Power exhaust
PWRD – Powered convenient outlet
UNPWRD – Unpowered convenient outlet

Table 9 – ELECTRIC HEAT - ELECTRICAL DATA

50LC*006
5 TONS

NOM. V–Ph–Hz	IFM TYPE	ELECTRIC HEATER PART NUMBER CRHEATER	NOM PWR (kW)	APP PWR (kW)	SINGLE POINT KIT PART NUMBER CRSINGLEXXXA00			
					NO C.O. or UNPWRD C.O.		w/PWRD C.O.	
					NO P.E.	w/ P.E. (pwrd fr/unit)	NO P.E.	w/ P.E. (pwrd fr/unit)
208/ 230–3–60	DD–STD	102A00	6.5	4.9/6.0	–*	–*	–*	–*
		104B00	10.5	7.9/9.6	–*	–*	–*	–*
		105A00	16.0	12.0/14.7	037	037	038	038
		104B00,104B00	21.0	15.8/19.3	038	038	038	038
		104B00,105A00	26.5	19.9/24.3	038	038	038	038
	MED	102A00	6.5	4.9/6.0	–*	–*	–*	–*
		104B00	10.5	7.9/9.6	–*	–*	–*	–*
		105A00	16.0	12.0/14.7	037	037	038	038
		104B00,104B00	21.0	15.8/19.3	038	038	038	038
		104B00,105A00	26.5	19.9/24.3	038	038	038	038
	HIGH	102A00	6.5	4.9/6.0	–*	–*	–*	–*
		104B00	10.5	7.9/9.6	–*	–*	–*	–*
		105A00	16.0	12.0/14.7	037	038	038	038
		104B00,104B00	21.0	15.8/19.3	038	038	038	038
		104B00,105A00	26.5	19.9/24.3	038	038	038	038
460–3–60	DD–STD	106A00	6.0	5.5	–	–	–	–
		108A00	11.5	10.6	–	–	–	–
		109A00	14.0	12.9	–	–	–	–
		108A00,108A00	23.0	21.1	037	037	037	037
		108A00,109A00	25.5	23.4	037	037	037	037
	MED	106A00	6.0	5.5	–	–	–	–
		108A00	11.5	10.6	–	–	–	–
		109A00	14.0	12.9	–	–	–	–
		108A00,108A00	23.0	21.1	037	037	037	037
		108A00,109A00	25.5	23.4	037	037	037	037
	HIGH	106A00	6.0	5.5	–	–	–	–
		108A00	11.5	10.6	–	–	–	–
		109A00	14.0	12.9	–	–	–	–
		108A00,108A00	23.0	21.1	037	037	037	037
		108A00,109A00	25.5	23.4	037	037	037	037
575–3–60	DD–STD	298A00	13.8	13.8	–	–	–	–
		301A00	23.0	23.0	037	037	037	037
	MED	298A00	13.8	13.8	–	–	–	–
		301A00	23.0	23.0	037	037	037	037
	HIGH	298A00	13.8	13.8	–	–	–	–
		301A00	23.0	23.0	037	037	037	037

* On 208/230–3–60 units with FIOP Non–Fused Disconnect, an accessory CRSINGLE037A00 Single Point box must be used where the above table shows dashes "–". The single point box contains the terminal block necessary to connect the non–fused disconnect load side wires and electric heat power wires.

LEGEND

APP PWR – 208 / 230V / 460V / 575V
DD – Direct drive
BD – Belt drive
C.O. – Convenient outlet
FLA – Full load amps
IFM – Indoor fan motor
NOM PWR – 240V / 480V / 600V
P.E. – Power exhaust
PWRD – Powered convenient outlet
UNPWRD – Unpowered convenient outlet

CURBS & WEIGHTS DIMENSIONS

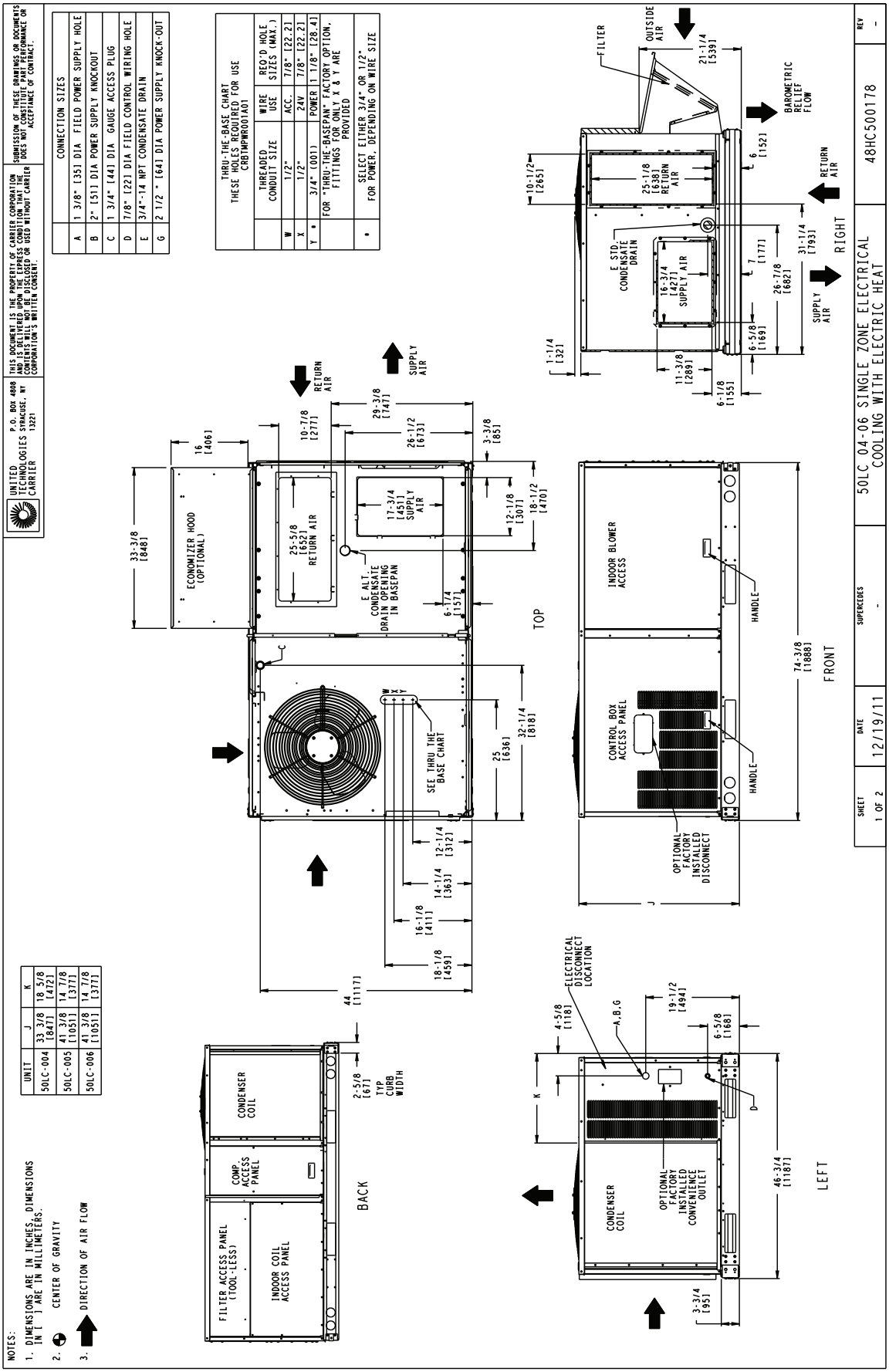

C12130

Fig. 3 - Dimensions 50LC 04-06

CURBS & WEIGHTS DIMENSIONS (cont.)

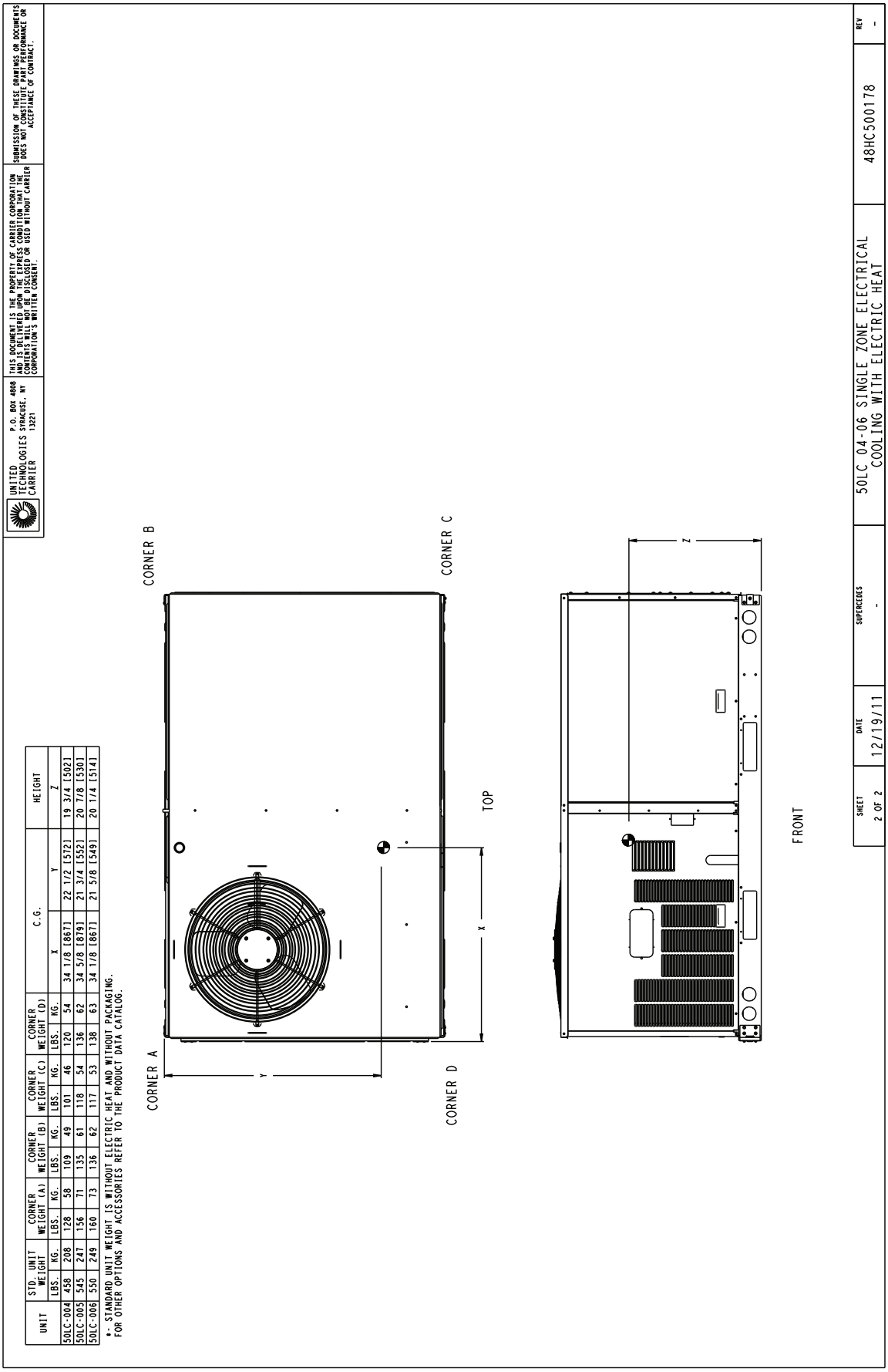

UNIT	STD. UNIT WEIGHT		CORNER WEIGHT (A)		CORNER WEIGHT (B)		CORNER WEIGHT (C)		CORNER WEIGHT (D)		C.G.		HEIGHT
	LBS.	KG.	LBS.	KG.	LBS.	KG.	LBS.	KG.	LBS.	KG.	X	Y	Z
50LC-004	458	208	128	58	109	49	101	46	120	54	34 1/8 [867]	22 1/2 [572]	19 3/4 [502]
50LC-005	545	247	156	71	135	61	118	54	136	62	34 5/8 [879]	21 3/4 [552]	20 7/8 [530]
50LC-006	550	249	160	73	136	62	117	53	138	63	34 1/8 [867]	21 5/8 [549]	20 1/4 [514]

♦ - STANDARD UNIT WEIGHT IS WITHOUT ELECTRIC HEAT AND WITHOUT PACKAGING.
FOR OTHER OPTIONS AND ACCESSORIES REFER TO THE PRODUCT DATA CATALOG.

C12131

Fig. 4 - Dimensions 50LC 04-06

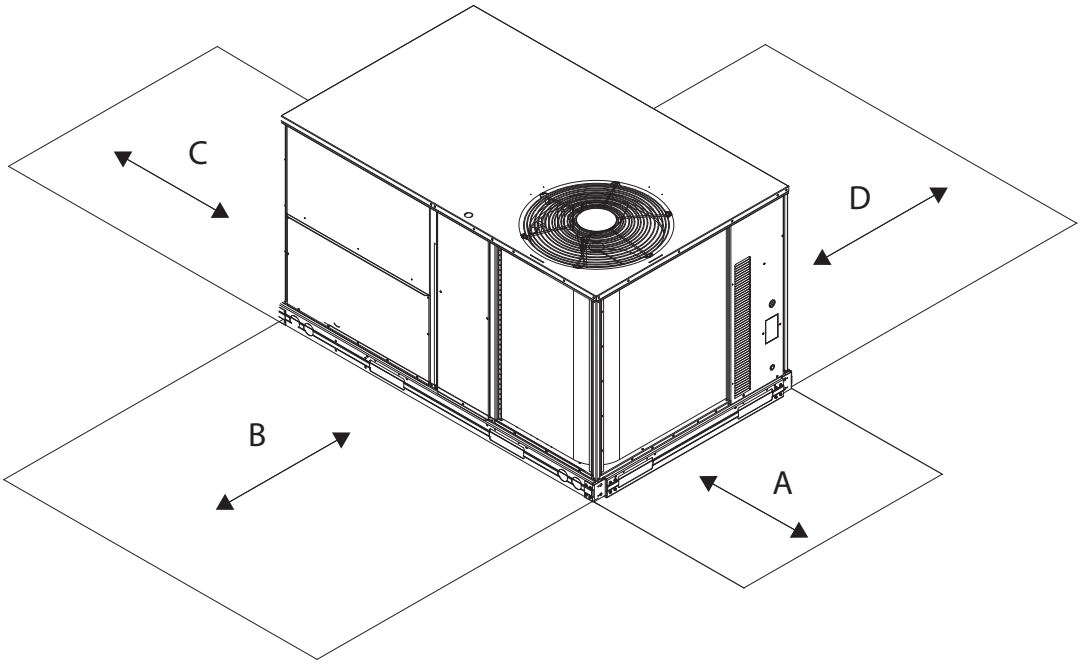

C08337

LOCATION	DIMENSION	CONDITION
A	48 – in (1219 mm) 18 – in (457 mm) 18 – in (457) mm 12 – in (305 mm)	Unit disconnect is mounted on panel No disconnect, convenience outlet option Recommended service clearance Minimum clearance
B	40 – in (1067 mm) 36 – in (914 mm) Special	Surface behind servicer is grounded (e.g., metal, masonry wall) Surface behind servicer is electrically non – conductive (e.g., wood, fiberglass) Check sources of flue products within 10 – ft of unit fresh air intake hood
C	36 – in (914 mm) 18 – in (457 mm)	Side condensate drain is used Minimum clearance
D	48 – in (1219 mm) 42 – in (1067 mm) 36 – in (914 mm) Special	No flue discharge accessory installed, surface is combustible material Surface behind servicer is grounded (e.g., metal, masonry wall, another unit) Surface behind servicer is electrically non – conductive (e.g., wood, fiberglass) Check for adjacent units or building fresh air intakes within 10 – ft (3 m) of this unit's flue outlet

NOTE: Unit not designed to have overhead obstruction. Contact Application Engineering for guidance on any application planning overhead obstruction or for vertical clearances.

Fig. 5 - Service Clearance Dimensional Drawing

CURBS & WEIGHTS DIMENSIONS (cont.)

CONNECTOR PKG. ACCY.	B	C	D ALT DRAIN HOLE	POWER	CONTROL	ACCESSORY POWER
CRBTMPWR001A01	1'-9 11/16" [551]	1'-4" [406]	1 3/4" [44.5]	3/4" [19] NPT	1/2" [12.7] NPT	1/2" [12.7] NPT
CRBTMPWR003A01				1 1/4" [31.7]		

ROOFCURB ACCESSORY	A	UNIT SIZE
CRRFCURB001A01	1'-2" [356]	50LC**04-06
CRRFCURB002A01	2'-0" [610]	

NOTES:
1. Roof curb accessory is shipped disassembled.
2. Insulated panels.
3. Dimensions in [ ] are in millimeters.
4. Roof curb: galvanized steel.
5. Attach ductwork to curb (flanges fo duct rest on curb).
6. Service clearance: 4 ft on each side.
7. Direction of airflow.

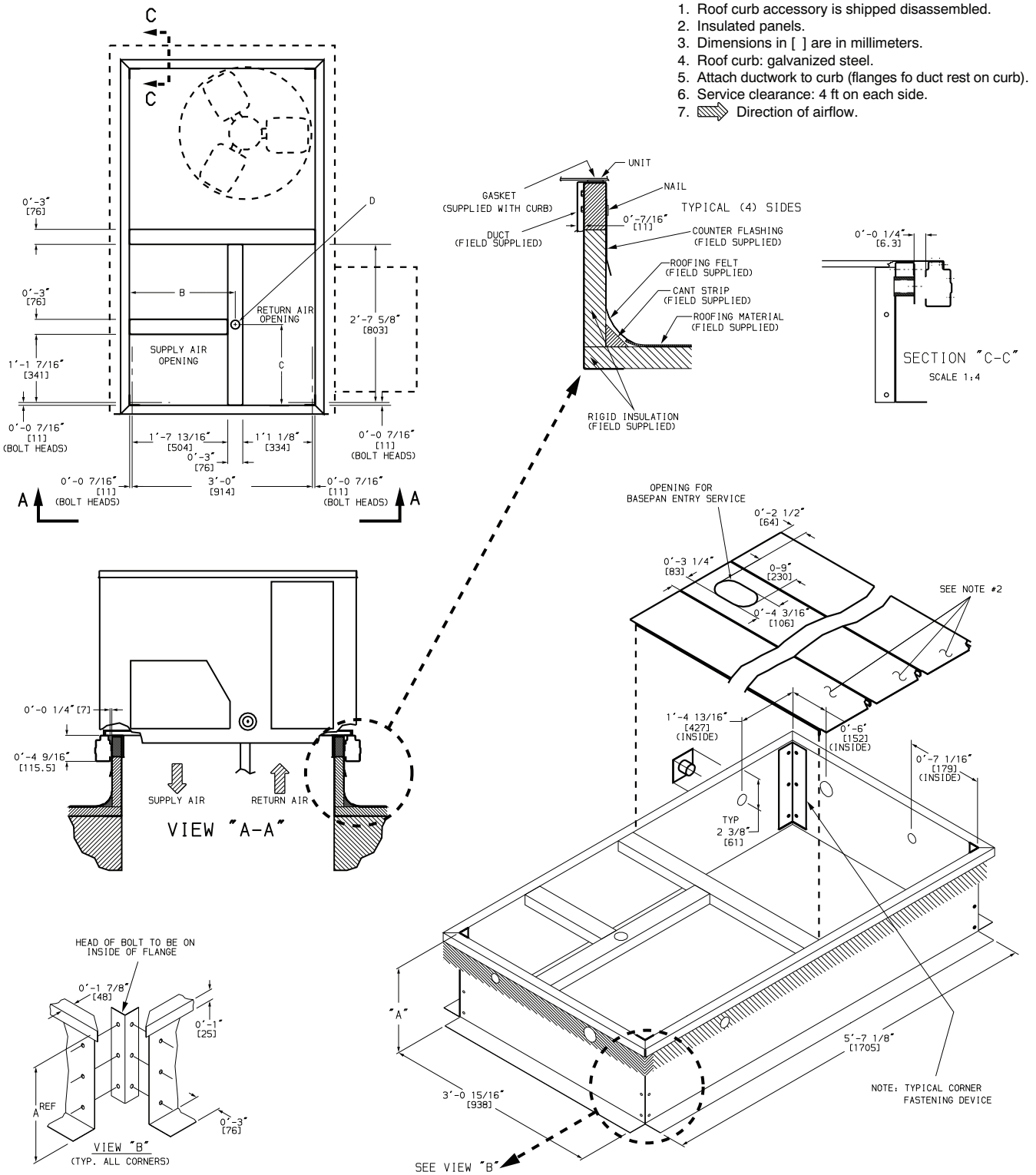

Fig. 6 - Roof Curb Details

OPTIONS & ACCESSORY WEIGHTS

OPTION / ACCESSORY	OPTION / ACCESSORY WEIGHTS					
	04		05		06	
	lb	kg	lb	kg	lb	kg
Power Exhaust – vertical	50	23	50	23	50	23
Power Exhaust – horizontal	30	14	30	14	30	14
EconoMi$er X or 2	50	23	50	23	50	23
Hail Guard (louvered)	16	7	16	7	16	7
Cu/Cu Condenser Coil	35	16	35	16	35	16
Cu/Cu Condenser & Evaporator Coils	60	27	60	27	90	41
Roof Curb (14–in. curb)	115	43	115	43	115	43
Roof Curb (24–in. curb)	197	74	197	74	197	74
CO_2 sensor	5	2	5	2	5	2
Electric Heater	30	14	30	14	30	14
Single Point Kit	10	5	10	5	10	5
Optional Indoor Motor / Drive	10	5	10	5	10	5
Motor Master Controller	35	16	35	16	35	16
Return Smoke Detector	5	2	5	2	5	2
Supply Smoke Detector	5	2	5	2	5	2
Fan / Filter Status Switch	2	1	2	1	2	1
Non–Fused Disconnect	15	7	15	7	15	7
Powered Convenience outlet	35	16	35	16	35	16
Non–Powered Convenience outlet	5	2	5	2	5	2
Enthalpy Sensor	2	1	2	1	2	1
Differential Enthalpy Sensor	3	1	3	1	3	1
HACR Breaker	15	7	15	7	15	7

Min operating ambient temp (cooling):

In mechanical cooling mode, your Carrier rooftop can safely operate down to an outdoor ambient temperature of 10°F (-12°C) and down to 0°F (-18°C) with ComfortLink controls. It is possible to provide cooling at lower outdoor ambient temperatures by using less outside air, economizers, and/or accessory low ambient kits.

Max operating ambient temp (cooling):

The maximum operating ambient temperature for cooling mode is 125°F (52°C). While cooling operation above 125°F (52°C) may be possible, it could cause either a reduction in performance, reliability, or a protective action by the unit's internal safety devices.

Min and max airflow (cooling mode):

To maintain safe and reliable operation of your rooftop, operate within the cooling airflow limits. Operating above the max may cause blow-off, undesired airflow noise, or airflow related problems with the rooftop unit. Operating below the min may cause problems with coil freeze-up.

Airflow:

All units are draw-though in cooling mode.

Outdoor air application strategies:

Economizers reduce operating expenses and compressor run time by providing a free source of cooling and a means of ventilation to match application changing needs. In fact, they should be considered for most applications. Also, consider the various economizer control methods and their benefits, as well as sensors required to accomplish your application goals. Please contact your local Carrier representative for assistance.

Motor limits, break horsepower (BHP):

Due to Carrier's internal unit design, air path, and specially designed motors, the full horsepower (maximum continuous BHP) band, as listed in Table 6 can be used with the utmost confidence. There is no need for extra safety factors, as Carrier's motors are designed and rigorously tested to use the entire, listed BHP range without either nuisance tripping or premature motor failure.

Sizing a rooftop

Bigger isn't necessarily better. While an air conditioner needs to have enough capacity to meet the load, it doesn't need excess capacity. In fact, having excess capacity typically results in very poor part load performance and humidity control.

Using higher design temperatures than ASHRAE recommends for your location, adding "safety factors" to the calculated load, and rounding up to the next largest unit, are all signs of oversizing air conditioners. Oversizing can cause short-cycling, and short cycling leads to poor humidity control, reduced efficiency, higher utility bills, drastic indoor temperature swings, excessive noise, and increased wear and tear on the air conditioner.

Rather than oversizing an air conditioner, wise contractors and engineers "right-size" or even slightly undersize air conditioners. Correctly sizing an air conditioner controls humidity better; promotes efficiency; reduces utility bills; extends equipment life, and maintains even, comfortable temperatures.

Low ambient applications

In low ambient applications where outside air might not be desired (such as contaminated or excessively humid outdoor environments), your Carrier rooftop can operate to ambient temperatures down to 10°F (-12°C) with electrical mechanical controls and down to 0°F (-18°C) with ComfortLink controls.

Table 10 – COOLING CAPACITIES - FIRST STAGE, PART LOAD 3 TONS

04 SIZE				AMBIENT TEMPERATURE														
				85			95			105			115			125		
				EA (dB)			EA (dB)			EA (dB)			EA (dB)			EA (dB)		
				75	80	85	75	80	85	75	80	85	75	80	85	75	80	85
750 Cfm	EA (wB)	58	THC	24.1	24.1	27.3	22.8	22.8	25.9	21.4	21.4	24.3	19.9	19.9	22.6	18.2	18.2	20.7
			SHC	20.9	24.1	27.3	19.7	22.8	25.9	18.5	21.4	24.3	17.1	19.9	22.6	15.6	18.2	20.7
		62	THC	24.8	24.8	27.2	23.2	23.2	26.3	21.5	21.5	25.2	19.9	19.9	23.6	18.2	18.2	21.6
			SHC	19.4	23.3	27.2	18.5	22.4	26.3	17.5	21.3	25.2	16.2	19.9	23.6	14.7	18.2	21.6
		67	THC	27.5	27.5	27.5	25.7	25.7	25.7	23.9	23.9	23.9	21.9	21.9	21.9	19.7	19.7	19.8
			SHC	15.7	19.7	23.7	14.9	18.8	22.8	13.9	17.9	21.8	13.0	16.9	20.9	11.9	15.9	19.8
		72	THC	30.5	30.5	30.5	28.6	28.6	28.6	26.6	26.6	26.6	24.5	24.5	24.5	22.2	22.2	22.2
			SHC	12.0	16.0	20.0	11.1	15.1	19.1	10.2	14.2	18.2	9.2	13.2	17.2	8.2	12.2	16.2
		76	THC	–	33.0	33.0	–	31.0	31.0	–	28.9	28.9	–	26.7	26.7	–	24.2	24.2
			SHC	–	12.9	17.0	–	12.1	16.1	–	11.2	15.2	–	10.2	14.2	–	9.2	13.2
900 Cfm	EA (wB)	58	THC	25.8	25.8	29.2	24.4	24.4	27.6	22.8	22.8	25.9	21.2	21.2	24.1	19.4	19.4	22.1
			SHC	22.4	25.8	29.2	21.1	24.4	27.6	19.7	22.8	25.9	18.3	21.2	24.1	16.7	19.4	22.1
		62	THC	25.8	25.8	30.4	24.4	24.4	28.7	22.9	22.9	27.0	21.2	21.2	25.1	19.4	19.4	23.0
			SHC	21.3	25.8	30.4	20.0	24.4	28.7	18.7	22.9	27.0	17.3	21.2	25.1	15.8	19.4	23.0
		67	THC	28.4	28.4	28.4	26.6	26.6	26.6	24.6	24.6	24.6	22.5	22.5	23.6	20.3	20.3	22.5
			SHC	17.1	21.8	26.5	16.2	20.9	25.6	15.2	19.9	24.6	14.2	18.9	23.6	13.2	17.8	22.5
		72	THC	31.4	31.4	31.4	29.4	29.4	29.4	27.4	27.4	27.4	25.2	25.2	25.2	22.7	22.7	22.7
			SHC	12.6	17.3	22.1	11.7	16.4	21.2	10.8	15.5	20.2	9.8	14.5	19.2	8.8	13.5	18.2
		76	THC	–	34.0	34.0	–	31.9	31.9	–	29.7	29.7	–	27.4	27.4	–	24.8	24.8
			SHC	–	13.7	18.5	–	12.8	17.6	–	11.9	16.7	–	10.9	15.7	–	9.9	14.6
1050 Cfm	EA (wB)	58	THC	27.1	27.1	30.7	25.6	25.6	29.0	24.0	24.0	27.2	22.2	22.2	25.3	20.3	20.3	23.2
			SHC	23.6	27.1	30.7	22.2	25.6	29.0	20.8	24.0	27.2	19.2	22.2	25.3	17.5	20.3	23.2
		62	THC	27.1	27.1	31.9	25.6	25.6	30.2	24.0	24.0	28.3	22.3	22.3	26.3	20.3	20.3	24.1
			SHC	22.4	27.1	31.9	21.1	25.6	30.2	19.7	24.0	28.3	18.2	22.3	26.3	16.6	20.3	24.1
		67	THC	29.1	29.1	29.2	27.2	27.2	28.3	25.2	25.2	27.2	23.0	23.0	26.2	20.7	20.7	25.0
			SHC	18.4	23.8	29.2	17.4	22.9	28.3	16.5	21.9	27.2	15.4	20.8	26.2	14.3	19.6	25.0
		72	THC	32.1	32.1	32.1	30.1	30.1	30.1	27.9	27.9	27.9	25.6	25.6	25.6	23.2	23.2	23.2
			SHC	13.2	18.6	24.1	12.3	17.7	23.1	11.3	16.8	22.2	10.3	15.8	21.2	9.3	14.7	20.1
		76	THC	–	34.7	34.7	–	32.6	32.6	–	30.3	30.3	–	–	–	–	–	–
			SHC	–	14.4	19.9	–	13.5	19.0	–	12.6	18.1	–	–	–	–	–	–
1200 Cfm	EA (wB)	58	THC	28.2	28.2	31.9	26.6	26.6	30.2	24.9	24.9	28.3	23.1	23.1	26.2	21.1	21.1	24.0
			SHC	24.5	28.2	31.9	23.1	26.6	30.2	21.6	24.9	28.3	20.0	23.1	26.2	18.2	21.1	24.0
		62	THC	28.2	28.2	33.2	26.7	26.7	31.4	24.9	24.9	29.4	23.1	23.1	27.3	21.1	21.1	25.0
			SHC	23.3	28.2	33.2	22.0	26.7	31.4	20.5	24.9	29.4	18.9	23.1	27.3	17.2	21.1	25.0
		67	THC	29.6	29.6	31.8	27.7	27.7	30.8	25.6	25.6	29.7	23.5	23.5	28.5	21.2	21.2	27.0
			SHC	19.6	25.7	31.8	18.6	24.7	30.8	17.6	23.7	29.7	16.5	22.5	28.5	15.3	21.2	27.0
		72	THC	32.6	32.6	32.6	30.6	30.6	30.6	28.4	28.4	28.4	26.0	26.0	26.0	23.5	23.5	23.5
			SHC	13.7	19.8	26.0	12.8	18.9	25.1	11.8	18.0	24.1	10.8	16.9	23.1	9.8	15.9	22.0
		76	THC	–	35.2	35.2	–	33.1	33.1	–	–	–	–	–	–	–	–	–
			SHC	–	15.1	21.3	–	14.1	20.3	–	–	–	–	–	–	–	–	–
1350 Cfm	EA (wB)	58	THC	29.1	29.1	32.9	27.5	27.5	31.1	25.7	25.7	29.2	23.8	23.8	27.0	21.7	21.7	24.7
			SHC	25.3	29.1	32.9	23.9	27.5	31.1	22.3	25.7	29.2	20.6	23.8	27.0	18.7	21.7	24.7
		62	THC	29.2	29.2	34.2	27.5	27.5	32.4	25.8	25.8	30.3	23.8	23.8	28.1	21.8	21.8	25.8
			SHC	24.1	29.2	34.2	22.7	27.5	32.4	21.2	25.8	30.3	19.5	23.8	28.1	17.8	21.8	25.8
		67	THC	30.0	30.0	34.2	28.1	28.1	33.1	26.0	26.0	31.9	23.9	23.9	30.3	21.8	21.8	27.8
			SHC	20.7	27.4	34.2	19.7	26.4	33.1	18.6	25.3	31.9	17.4	23.9	30.3	15.8	21.8	27.8
		72	THC	33.0	33.0	33.0	30.9	30.9	30.9	28.7	28.7	28.7	26.3	26.3	26.3	23.7	23.7	23.8
			SHC	14.2	21.0	27.9	13.2	20.1	26.9	12.3	19.1	26.0	11.3	18.1	24.9	10.2	17.0	23.8
		76	THC	–	35.7	35.7	–	–	–	–	–	–	–	–	–	–	–	–
			SHC	–	15.7	22.6	–	–	–	–	–	–	–	–	–	–	–	–

LEGEND:

– – Do not operate
Cfm – Cubic feet per minute (supply air)
EAT(db) – Entering air temperature (dry bulb)
EAT(wb) – Entering air temperature (wet bulb)
SHC – Sensible heat capacity
TC – Total capacity

Table 11 – COOLING CAPACITIES - SECOND STAGE, FULL LOAD 3 TONS

04 SIZE				AMBIENT TEMPERATURE														
				85			95			105			115			125		
				EA (dB)			EA (dB)			EA (dB)			EA (DB)			EA (dB)		
				75	80	85	75	80	85	75	80	85	75	80	85	75	80	85
900 Cfm	EA (wB)	58	THC	31.5	31.5	35.8	29.8	29.8	33.9	27.9	27.9	31.9	25.9	25.9	29.7	23.9	23.9	27.4
			SHC	27.2	31.5	35.8	25.6	29.8	33.9	24	27.9	31.9	22.2	25.9	29.7	20.3	23.9	27.4
		62	THC	33.4	33.4	34	31.3	31.3	32.7	29	29	31.3	26.6	26.6	29.8	24.1	24.1	28.2
			SHC	24.6	29.3	34	23.3	28	32.7	21.9	26.6	31.3	20.5	25.1	29.8	19	23.6	28.2
		67	THC	37.3	37.3	37.3	35	35	35	32.5	32.5	32.5	29.9	29.9	29.9	27.2	27.2	27.2
			SHC	20.3	25	29.8	19	23.7	28.5	17.7	22.4	27.1	16.3	21	25.7	14.8	19.6	24.3
		72	THC	41.5	41.5	41.5	39	39	39	36.3	36.3	36.3	33.6	33.6	33.6	30.6	30.6	30.6
			SHC	15.9	20.7	25.5	14.6	19.4	24.2	13.3	18.1	22.8	11.9	16.7	21.4	10.5	15.2	20
		76	THC	–	45	45	–	42.4	42.4	–	39.6	39.6	–	36.7	36.7	–	33.5	33.5
			SHC	–	17.1	22.1	–	15.8	20.8	–	14.5	19.5	–	13.2	18.1	–	11.7	16.6
1050 Cfm	EA (wB)	58	THC	33.6	33.6	38.1	31.7	31.7	36	29.7	29.7	33.9	27.6	27.6	31.6	25.4	25.4	29.1
			SHC	29	33.6	38.1	27.4	31.7	36	25.6	29.7	33.9	23.7	27.6	31.6	21.7	25.4	29.1
		62	THC	34.7	34.7	37.5	32.5	32.5	36.1	30.1	30.1	34.6	27.7	27.7	33	25.4	25.4	30.4
			SHC	26.7	32.1	37.5	25.4	30.7	36.1	23.9	29.3	34.6	22.4	27.7	33	20.4	25.4	30.4
		67	THC	38.6	38.6	38.6	36.1	36.1	36.1	33.6	33.6	33.6	30.9	30.9	30.9	28	28	28
			SHC	21.8	27.2	32.7	20.4	25.9	31.4	19.1	24.5	30	17.7	23.1	28.6	16.2	21.6	27.1
		72	THC	42.8	42.8	42.8	40.2	40.2	40.2	37.5	37.5	37.5	34.6	34.6	34.6	31.5	31.5	31.5
			SHC	16.6	22.1	27.6	15.3	20.8	26.3	14	19.5	24.9	12.6	18	23.5	11.1	16.6	22.1
		76	THC	–	46.4	46.4	–	43.6	43.6	–	40.7	40.7	–	37.7	37.7	–	34.4	34.4
			SHC	–	18	23.7	–	16.7	22.3	–	15.3	21	–	13.9	19.5	–	12.5	18.1
1200 Cfm	EA (wB)	58	THC	35.3	35.3	40	33.3	33.3	37.9	31.3	31.3	35.6	29	29	33.2	26.7	26.7	30.6
			SHC	30.6	35.3	40	28.8	33.3	37.9	26.9	31.3	35.6	24.9	29	33.2	22.8	26.7	30.6
		62	THC	35.8	35.8	40.8	33.6	33.6	39.1	31.3	31.3	37.1	29.1	29.1	34.6	26.7	26.7	31.9
			SHC	28.7	34.7	40.8	27.2	33.2	39.1	25.5	31.3	37.1	23.6	29.1	34.6	21.5	26.7	31.9
		67	THC	39.6	39.6	39.6	37	37	37	34.4	34.4	34.4	31.6	31.6	31.6	28.6	28.6	29.7
			SHC	23.1	29.3	35.5	21.8	27.9	34.1	20.4	26.6	32.7	18.9	25.1	31.3	17.4	23.6	29.7
		72	THC	43.9	43.9	43.9	41.2	41.2	41.2	38.3	38.3	38.3	35.3	35.3	35.3	32.1	32.1	32.1
			SHC	17.3	23.5	29.7	15.9	22.2	28.4	14.6	20.8	27	13.1	19.3	25.5	11.7	17.9	24
		76	THC	–	47.5	47.5	–	44.6	44.6	–	41.6	41.6	–	38.4	38.4	–	35.1	35.1
			SHC	–	18.8	25.2	–	17.4	23.8	–	16.1	22.4	–	14.7	21	–	13.2	19.5
1350 Cfm	EA (wB)	58	THC	36.8	36.8	41.7	34.7	34.7	39.4	32.5	32.5	37	30.2	30.2	34.5	27.8	27.8	31.8
			SHC	31.9	36.8	41.7	30	34.7	39.4	28.1	32.5	37	26	30.2	34.5	23.8	27.8	31.8
		62	THC	36.8	36.8	43.4	34.8	34.8	41	32.6	32.6	38.6	30.3	30.3	36	27.8	27.8	33.2
			SHC	30.3	36.8	43.4	28.5	34.8	41	26.6	32.6	38.6	24.6	30.3	36	22.5	27.8	33.2
		67	THC	40.4	40.4	40.4	37.8	37.8	37.8	35	35	35.4	32.2	32.2	33.9	29.2	29.2	32.3
			SHC	24.4	31.3	38.2	23	29.9	36.8	21.6	28.5	35.4	20.2	27	33.9	18.6	25.4	32.3
		72	THC	44.7	44.7	44.7	41.9	41.9	41.9	39	39	39	35.9	35.9	35.9	32.7	32.7	32.7
			SHC	17.9	24.8	31.7	16.5	23.4	30.3	15.1	22	28.9	13.7	20.6	27.5	12.2	19.1	26
		76	THC	–	48.3	48.3	–	45.4	45.4	–	42.3	42.3	–	39.1	39.1	–	35.6	35.6
			SHC	–	19.5	26.6	–	18.1	25.2	–	16.8	23.8	–	15.3	22.3	–	13.8	20.8
1500 Cfm	EA (wB)	58	THC	38.1	38.1	43.1	35.9	35.9	40.8	33.7	33.7	38.3	31.3	31.3	35.6	28.7	28.7	32.8
			SHC	33	38.1	43.1	31.1	35.9	40.8	29	33.7	38.3	26.9	31.3	35.6	24.6	28.7	32.8
		62	THC	38.1	38.1	44.8	36	36	42.4	33.7	33.7	39.9	31.3	31.3	37.1	28.7	28.7	34.2
			SHC	31.4	38.1	44.8	29.5	36	42.4	27.5	33.7	39.9	25.5	31.3	37.1	23.2	28.7	34.2
		67	THC	41	41	41	38.4	38.4	39.3	35.6	35.6	37.9	32.7	32.7	36.3	29.6	29.6	34.6
			SHC	25.6	33.2	40.8	24.2	31.8	39.3	22.8	30.3	37.9	21.3	28.8	36.3	19.7	27.2	34.6
		72	THC	45.4	45.4	45.4	42.5	42.5	42.5	39.5	39.5	39.5	36.4	36.4	36.4	33.1	33.1	33.1
			SHC	18.4	26	33.6	17	24.6	32.2	15.6	23.2	30.8	14.2	21.8	29.3	12.7	20.2	27.8
		76	THC	–	49	49	–	46	46	–	42.9	42.9	–	39.6	39.6	–	36	36
			SHC	–	20.2	27.9	–	18.8	26.5	–	17.4	25.1	–	16	23.6	–	14.5	22.1

LEGEND:

– – Do not operate
Cfm – Cubic feet per minute (supply air)
EAT(db) – Entering air temperature (dry bulb)
EAT(wb) – Entering air temperature (wet bulb)
SHC – Sensible heat capacity
TC – Total capacity

Table 12 – COOLING CAPACITIES - FIRST STAGE PART LOAD 4 TONS

05 SIZE				AMBIENT TEMPERATURE														
				85			95			105			115			125		
				EA (dB)			EA (dB)			EA (dB)			EA (dB)			EA (dB)		
				75	80	85	75	80	85	75	80	85	75	80	85	75	80	85
1000 Cfm	EA (wB)	58	THC	32.0	32.0	36.3	30.5	30.5	34.6	28.8	28.8	32.7	26.9	26.9	30.6	24.8	24.8	28.3
			SHC	27.8	32.0	36.3	26.4	30.5	34.6	24.9	28.8	32.7	23.2	26.9	30.6	21.4	24.8	28.3
		62	THC	33.2	33.2	35.6	31.3	31.3	34.5	29.3	29.3	33.2	27.1	27.1	31.7	24.9	24.9	29.5
			SHC	25.6	30.6	35.6	24.5	29.5	34.5	23.3	28.2	33.2	21.9	26.8	31.7	20.3	24.9	29.5
		67	THC	36.9	36.9	36.9	34.8	34.8	34.8	32.6	32.6	32.6	30.1	30.1	30.1	27.4	27.4	27.4
			SHC	21.0	26.0	31.1	19.9	25.0	30.0	18.8	23.8	28.9	17.6	22.6	27.6	16.3	21.3	26.3
		72	THC	41.0	41.0	41.0	38.7	38.7	38.7	36.3	36.3	36.3	33.7	33.7	33.7	30.8	30.8	30.8
			SHC	16.2	21.3	26.4	15.1	20.2	25.3	14.0	19.1	24.2	12.9	17.9	23.0	11.6	16.6	21.7
		76	THC	–	44.4	44.4	–	42.1	42.1	–	39.5	39.5	–	36.7	36.7	–	33.6	33.6
			SHC	–	17.4	22.8	–	16.4	21.7	–	15.3	20.6	–	14.1	19.3	–	12.9	18.0
1200 Cfm	EA (wB)	58	THC	34.2	34.2	38.7	32.6	32.6	36.9	30.7	30.7	34.8	28.7	28.7	32.6	26.5	26.5	30.1
			SHC	29.7	34.2	38.7	28.2	32.6	36.9	26.6	30.7	34.8	24.8	28.7	32.6	22.8	26.5	30.1
		62	THC	34.6	34.6	39.6	32.6	32.6	38.4	30.8	30.8	36.3	28.7	28.7	33.9	26.5	26.5	31.4
			SHC	28.0	33.8	39.6	26.9	32.6	38.4	25.3	30.8	36.3	23.5	28.7	33.9	21.6	26.5	31.4
		67	THC	38.2	38.2	38.2	36.0	36.0	36.0	33.7	33.7	33.7	31.1	31.1	31.1	28.2	28.2	29.6
			SHC	22.7	28.6	34.6	21.6	27.5	33.5	20.4	26.4	32.3	19.2	25.1	31.0	17.8	23.7	29.6
		72	THC	42.3	42.3	42.3	40.0	40.0	40.0	37.5	37.5	37.5	34.7	34.7	34.7	31.7	31.7	31.7
			SHC	17.0	23.0	29.0	15.9	21.9	27.9	14.8	20.7	26.7	13.6	19.5	25.5	12.3	18.2	24.1
		76	THC	–	45.8	45.8	–	43.4	43.4	–	40.7	40.7	–	37.7	37.7	–	34.5	34.5
			SHC	–	18.4	24.6	–	17.3	23.5	–	16.2	22.3	–	15.0	21.1	–	13.7	19.7
1400 Cfm	EA (wB)	58	THC	36.0	36.0	40.7	34.2	34.2	38.7	32.3	32.3	36.6	30.1	30.1	34.2	27.8	27.8	31.6
			SHC	31.3	36.0	40.7	29.7	34.2	38.7	28.0	32.3	36.6	26.1	30.1	34.2	24.0	27.8	31.6
		62	THC	36.0	36.0	42.3	34.3	34.3	40.3	32.3	32.3	38.1	30.2	30.2	35.6	27.8	27.8	32.9
			SHC	29.8	36.0	42.3	28.2	34.3	40.3	26.6	32.3	38.1	24.7	30.2	35.6	22.7	27.8	32.9
		67	THC	39.1	39.1	39.1	36.9	36.9	36.9	34.5	34.5	35.5	31.8	31.8	34.2	28.9	28.9	32.7
			SHC	24.2	31.1	37.9	23.1	29.9	36.8	21.9	28.7	35.5	20.7	27.4	34.2	19.3	26.0	32.7
		72	THC	43.3	43.3	43.3	40.9	40.9	40.9	38.3	38.3	38.3	35.5	35.5	35.5	32.3	32.3	32.3
			SHC	17.7	24.5	31.4	16.6	23.4	30.3	15.5	22.3	29.1	14.2	21.0	27.8	12.9	19.7	26.4
		76	THC	–	46.9	46.9	–	44.3	44.3	–	41.5	41.5	–	38.5	38.5	–	35.2	35.2
			SHC	–	19.3	26.3	–	18.2	25.2	–	17.0	24.0	–	15.8	22.7	–	14.5	21.3
1600 Cfm	EA (wB)	58	THC	37.5	37.5	42.3	35.6	35.6	40.3	33.6	33.6	38.0	31.3	31.3	35.5	28.9	28.9	32.8
			SHC	32.6	37.5	42.3	30.9	35.6	40.3	29.1	33.6	38.0	27.1	31.3	35.5	24.9	28.9	32.8
		62	THC	37.5	37.5	44.0	35.6	35.6	41.9	33.6	33.6	39.6	31.4	31.4	37.0	28.9	28.9	34.2
			SHC	31.0	37.5	44.0	29.4	35.6	41.9	27.6	33.6	39.6	25.7	31.4	37.0	23.6	28.9	34.2
		67	THC	39.9	39.9	41.0	37.6	37.6	39.8	35.1	35.1	38.5	32.4	32.4	37.1	29.4	29.4	35.4
			SHC	25.7	33.4	41.0	24.6	32.2	39.8	23.3	30.9	38.5	22.0	29.5	37.1	20.5	28.0	35.4
		72	THC	44.1	44.1	44.1	41.6	41.6	41.6	39.0	39.0	39.0	36.0	36.0	36.0	32.8	32.8	32.8
			SHC	18.3	26.0	33.7	17.2	24.9	32.5	16.1	23.7	31.3	14.8	22.4	30.0	13.5	21.1	28.6
		76	THC	–	47.7	47.7	–	45.1	45.1	–	42.2	42.2	–	39.1	39.1	–	35.7	35.7
			SHC	–	20.1	27.9	–	19.0	26.7	–	17.8	25.5	–	16.5	24.2	–	15.2	22.8
1800 Cfm	EA (wB)	58	THC	38.7	38.7	43.7	36.8	36.8	41.6	34.7	34.7	39.2	32.3	32.3	36.7	29.8	29.8	33.8
			SHC	33.7	38.7	43.7	31.9	36.8	41.6	30.1	34.7	39.2	28.0	32.3	36.7	25.7	29.8	33.8
		62	THC	38.7	38.7	45.4	36.8	36.8	43.2	34.7	34.7	40.8	32.4	32.4	38.2	29.8	29.8	35.2
			SHC	32.0	38.7	45.4	30.4	36.8	43.2	28.5	34.7	40.8	26.6	32.4	38.2	24.4	29.8	35.2
		67	THC	40.5	40.5	44.0	38.1	38.1	42.7	35.6	35.6	41.3	32.9	32.9	39.7	30.0	30.0	37.6
			SHC	27.1	35.5	44.0	25.9	34.3	42.7	24.6	33.0	41.3	23.2	31.5	39.7	21.6	29.6	37.6
		72	THC	44.7	44.7	44.7	42.2	42.2	42.2	39.5	39.5	39.5	36.5	36.5	36.5	33.2	33.2	33.2
			SHC	18.9	27.4	35.9	17.8	26.3	34.8	16.6	25.1	33.5	15.4	23.8	32.2	14.0	22.4	30.8
		76	THC	–	48.4	48.4	–	45.6	45.6	–	42.7	42.7	–	39.5	39.5	–	36.1	36.1
			SHC	–	20.8	29.4	–	19.7	28.2	–	18.5	27.0	–	17.2	25.6	–	15.8	24.1

LEGEND:

– – Do not operate
Cfm – Cubic feet per minute (supply air)
EAT(db) – Entering air temperature (dry bulb)
EAT(wb) – Entering air temperature (wet bulb)
SHC – Sensible heat capacity
TC – Total capacity

Table 13 – COOLING CAPACITIES - SECOND STAGE FULL LOAD 4 TONS

05 SIZE				AMBIENT TEMPERATURE														
				85			95			105			115			125		
				EA (dB)			EA (dB)			EA (dB)			EA (dB)			EA (dB)		
				75	80	85	75	80	85	75	80	85	75	80	85	75	80	85
1200 Cfm	EA (wB)	58	THC	42.0	42.0	47.6	39.8	39.8	45.2	37.5	37.5	42.6	35.0	35.0	39.9	32.5	32.5	37.1
			SHC	36.4	42.0	47.6	34.4	39.8	45.2	32.3	37.5	42.6	30.1	35.0	39.9	27.8	32.5	37.1
		62	THC	44.7	44.7	44.7	42.0	42.0	43.1	39.1	39.1	41.4	36.1	36.1	39.6	33.0	33.0	37.7
			SHC	32.7	38.7	44.7	31.1	37.1	43.1	29.4	35.4	41.4	27.7	33.7	39.6	25.9	31.8	37.7
		67	THC	49.4	49.4	49.4	46.5	46.5	46.5	43.4	43.4	43.4	40.2	40.2	40.2	36.8	36.8	36.8
			SHC	27	33.1	39.1	25.5	31.5	37.5	23.8	29.9	35.9	22.2	28.2	34.2	20.4	26.5	32.5
		72	THC	54.5	54.5	54.5	51.4	51.4	51.4	48.1	48.1	48.1	44.6	44.6	44.6	41.0	41.0	41.0
			SHC	21.2	27.4	33.5	19.7	25.8	31.9	18.1	24.2	30.3	16.4	22.5	28.6	14.7	20.8	26.9
		76	THC	–	58.8	58.8	–	55.4	55.4	–	51.9	51.9	–	48.2	48.2	–	44.4	44.4
			SHC	–	22.7	29.3	–	21.1	27.7	–	19.6	26.1	–	17.9	24.4	–	16.2	22.6
1400 Cfm	EA (wB)	58	THC	44.5	44.5	50.4	42.1	42.1	47.8	39.7	39.7	45.1	37.1	37.1	42.2	34.3	34.3	39.2
			SHC	38.6	44.5	50.4	36.5	42.1	47.8	34.3	39.7	45.1	31.9	37.1	42.2	29.5	34.3	39.2
		62	THC	46.3	46.3	49.1	43.4	43.4	47.3	40.5	40.5	45.5	37.4	37.4	43.4	34.4	34.4	40.9
			SHC	35.3	42.2	49.1	33.6	40.5	47.3	31.9	38.7	45.5	30.0	36.7	43.4	27.9	34.4	40.9
		67	THC	51.0	51.0	51.0	48.0	48	48.0	44.7	44.7	44.7	41.4	41.4	41.4	37.8	37.8	37.8
			SHC	28.8	35.7	42.7	27.2	34.1	41.1	25.5	32.5	39.4	23.8	30.7	37.7	22.1	29.0	35.9
		72	THC	56.2	56.2	56.2	52.9	52.9	52.9	49.4	49.4	49.4	45.8	45.8	45.8	42.0	42.0	42.0
			SHC	22.1	29.1	36.1	20.5	27.5	34.5	18.9	25.8	32.8	17.2	24.1	31.1	15.5	22.4	29.3
		76	THC	–	60.4	60.4	–	56.9	56.9	–	53.3	53.3	–	49.4	49.4	–	45.4	45.4
			SHC	–	23.7	31.2	–	22.1	29.5	–	20.5	27.8	–	18.8	26.1	–	17.1	24.3
1600 Cfm	EA (wB)	58	THC	46.6	46.6	52.7	44.1	44.1	50.0	41.5	41.5	47.2	38.8	38.8	44.1	35.9	35.9	40.9
			SHC	40.4	46.6	52.7	38.2	44.1	50.0	35.9	41.5	47.2	33.4	38.8	44.1	30.8	35.9	40.9
		62	THC	47.6	47.6	53.0	44.7	44.7	51.1	41.6	41.6	49.2	38.8	38.8	46.0	35.9	35.9	42.7
			SHC	37.7	45.3	53.0	35.9	43.5	51.1	34.1	41.6	49.2	31.7	38.8	46.0	29.2	35.9	42.7
		67	THC	52.3	52.3	52.3	49.1	49.1	49.1	45.8	45.8	45.8	42.3	42.3	42.3	38.6	38.6	39.1
			SHC	30.4	38.3	46.1	28.8	36.6	44.4	27.1	34.9	42.7	25.4	33.2	40.9	23.6	31.3	39.1
		72	THC	57.4	57.4	57.4	54.0	54.0	54.0	50.5	50.5	50.5	46.7	46.7	46.7	42.8	42.8	42.8
			SHC	22.8	30.7	38.6	21.2	29.1	36.9	19.6	27.4	35.2	17.9	25.7	33.5	16.1	23.9	31.7
		76	THC	–	61.7	61.7	–	58.1	58.1	–	54.3	54.3	–	50.3	50.3	–	46.2	46.2
			SHC	–	24.6	32.9	–	23	31.2	–	21.4	29.5	–	19.7	27.7	–	17.9	25.9
1800 Cfm	EA (wB)	58	THC	48.4	48.4	54.7	45.8	45.8	51.9	43.1	43.1	48.9	40.2	40.2	45.7	37.2	37.2	42.4
			SHC	42.0	48.4	54.7	39.7	45.8	51.9	37.3	43.1	48.9	34.7	40.2	45.7	32.0	37.2	42.4
		62	THC	48.8	48.8	56.4	45.9	45.9	54.0	43.1	43.1	50.9	40.2	40.2	47.6	37.2	37.2	44.2
			SHC	39.7	48.1	56.4	37.7	45.9	54.0	35.4	43.1	50.9	32.9	40.2	47.6	30.3	37.2	44.2
		67	THC	53.3	53.3	53.3	50.0	50	50.0	46.6	46.6	46.6	43.0	43.0	44.1	39.2	39.2	42.1
			SHC	32	40.7	49.3	30.3	39.0	47.7	28.6	37.3	45.9	26.8	35.5	44.1	25	33.6	42.1
		72	THC	58.5	58.5	58.5	55.0	55.0	55.0	51.3	51.3	51.3	47.5	47.5	47.5	43.4	43.4	43.4
			SHC	23.5	32.2	41.0	21.9	30.6	39.3	20.2	28.9	37.6	18.5	27.1	35.8	16.7	25.3	33.9
		76	THC	–	62.8	62.8	–	59.0	59.0	–	55.1	55.1	–	51.1	51.1	–	46.9	46.9
			SHC	–	25.5	34.5	–	23.8	32.8	–	22.2	31.1	–	20.4	29.3	–	18.6	27.4
2000 Cfm	EA (wB)	58	THC	49.9	49.9	56.5	47.2	47.2	53.5	44.4	44.4	50.4	41.4	41.4	47.1	38.3	38.3	43.6
			SHC	43.4	49.9	56.5	41.0	47.2	53.5	38.4	44.4	50.4	35.8	41.4	47.1	33.0	38.3	43.6
		62	THC	50.0	50.0	58.7	47.3	47.3	55.7	44.5	44.5	52.4	41.5	41.5	49.0	38.3	38.3	45.5
			SHC	41.2	50.0	58.7	38.9	47.3	55.7	36.5	44.5	52.4	33.9	41.5	49.0	31.2	38.3	45.5
		67	THC	54.1	54.1	54.1	50.7	50.7	50.7	47.2	47.2	48.9	43.5	43.5	47.0	39.7	39.7	45.0
			SHC	33.4	42.9	52.4	31.8	41.2	50.7	30	39.5	48.9	28.2	37.6	47.0	26.3	35.6	45.0
		72	THC	59.3	59.3	59.3	55.7	55.7	55.7	52.0	52.0	52.0	48.0	48.0	48.0	43.9	43.9	43.9
			SHC	24.2	33.7	43.2	22.5	32.0	41.5	20.8	30.3	39.8	19.1	28.5	37.9	17.3	26.7	36.0
		76	THC	–	63.6	63.6	–	59.8	59.8	–	55.8	55.8	–	51.6	51.6	–	47.4	47.4
			SHC	–	26.3	36.1	–	24.6	34.4	–	22.9	32.6	–	21.1	30.7	–	19.3	28.8

LEGEND:

– – Do not operate
Cfm – Cubic feet per minute (supply air)
EAT(db) – Entering air temperature (dry bulb)
EAT(wb) – Entering air temperature (wet bulb)
SHC – Sensible heat capacity
TC – Total capacity

Table 14 – COOLING CAPACITIES - FIRST STAGE PART LOAD 5 TONS

06 SIZE				AMBIENT TEMPERATURE														
				85			95			105			115			125		
				EA (dB)			EA (dB)			EA (dB)			EA (dB)			EA (dB)		
				75	80	85	75	80	85	75	80	85	75	80	85	75	80	85
1250 Cfm	EA (wB)	58	THC	40.1	40.1	45.4	38.0	38.0	43.1	35.7	35.7	40.6	33.1	33.1	37.8	30.3	30.3	34.7
			SHC	34.8	40.1	45.4	32.8	38.0	43.1	30.8	35.7	40.6	28.5	33.1	37.8	26.0	30.3	34.7
		62	THC	40.9	40.9	45.8	38.4	38.4	44.2	35.8	35.8	42.2	33.2	33.2	39.4	30.4	30.4	36.2
			SHC	32.4	39.1	45.8	30.9	37.5	44.2	29.1	35.6	42.2	27.0	33.2	39.4	24.6	30.4	36.2
		67	THC	45.4	45.4	45.4	42.6	42.6	42.6	39.6	39.6	39.6	36.3	36.3	36.3	32.8	32.8	33.3
			SHC	26.2	32.9	39.7	24.8	31.5	38.3	23.2	30.0	36.7	21.6	28.3	35.1	19.9	26.6	33.3
		72	THC	50.4	50.4	50.4	47.5	47.5	47.5	44.3	44.3	44.3	40.8	40.8	40.8	37.0	37.0	37.0
			SHC	19.8	26.6	33.4	18.4	25.2	32.0	16.9	23.7	30.5	15.3	22.1	28.9	13.6	20.4	27.2
		76	THC	–	54.8	54.8	–	51.7	51.7	–	48.3	48.3	–	44.6	44.6	–	40.6	40.6
			SHC	–	21.5	28.4	–	20.1	27.0	–	18.6	25.4	–	17.0	23.8	–	15.3	22.1
1500 Cfm	EA (wB)	58	THC	42.9	42.9	48.6	40.6	40.6	46.1	38.1	38.1	43.3	35.4	35.4	40.3	32.4	32.4	37.0
			SHC	37.2	42.9	48.6	35.2	40.6	46.1	32.9	38.1	43.3	30.5	35.4	40.3	27.8	32.4	37.0
		62	THC	43.0	43.0	50.5	40.7	40.7	48.0	38.2	38.2	45.1	35.4	35.4	42.0	32.5	32.5	38.6
			SHC	35.4	43.0	50.5	33.4	40.7	48.0	31.2	38.2	45.1	28.9	35.4	42.0	26.3	32.5	38.6
		67	THC	46.9	46.9	46.9	44.0	44.0	44.0	40.9	40.9	41.6	37.5	37.5	39.9	33.8	33.8	38.0
			SHC	28.5	36.6	44.6	27.1	35.1	43.1	25.5	33.5	41.6	23.8	31.9	39.9	22.1	30.1	38.0
		72	THC	52.0	52.0	52.0	48.9	48.9	48.9	45.6	45.6	45.6	41.9	41.9	41.9	38.0	38.0	38.0
			SHC	20.9	29.0	37.1	19.5	27.5	35.6	17.9	26.0	34.1	16.3	24.4	32.4	14.6	22.6	30.7
		76	THC	–	56.5	56.5	–	53.2	53.2	–	49.7	49.7	–	45.8	45.8	–	–	–
			SHC	–	22.8	31.0	–	21.4	29.5	–	19.9	28.0	–	18.2	26.3	–	–	–
1750 Cfm	EA (wB)	58	THC	45.2	45.2	51.1	42.7	42.7	48.4	40.1	40.1	45.5	37.2	37.2	42.3	34.1	34.1	38.9
			SHC	39.2	45.2	51.1	37.0	42.7	48.4	34.7	40.1	45.5	32.1	37.2	42.3	29.3	34.1	38.9
		62	THC	45.2	45.2	53.1	42.8	42.8	50.4	40.1	40.1	47.4	37.3	37.3	44.1	34.1	34.1	40.5
			SHC	37.3	45.2	53.1	35.2	42.8	50.4	32.9	40.1	47.4	30.4	37.3	44.1	27.7	34.1	40.5
		67	THC	48.0	48.0	49.4	45.0	45.0	47.8	41.8	41.8	46.2	38.3	38.3	44.4	34.6	34.6	42.4
			SHC	30.8	40.1	49.4	29.3	38.5	47.8	27.7	36.9	46.2	26.0	35.2	44.4	24.1	33.2	42.4
		72	THC	53.1	53.1	53.1	50.0	50.0	50.0	46.5	46.5	46.5	42.8	42.8	42.8	38.7	38.7	38.7
			SHC	21.9	31.2	40.6	20.4	29.7	39.1	18.8	28.2	37.5	17.2	26.5	35.8	15.5	24.8	34.1
		76	THC	–	57.7	57.7	–	54.3	54.3	–	50.7	50.7	–	–	–	–	–	–
			SHC	–	24.0	33.4	–	22.6	32.0	–	21.0	30.4	–	–	–	–	–	–
2000 Cfm	EA (wB)	58	THC	47.0	47.0	53.2	44.5	44.5	50.4	41.7	41.7	47.3	38.7	38.7	44.0	35.4	35.4	40.3
			SHC	40.8	47.0	53.2	38.6	44.5	50.4	36.1	41.7	47.3	33.4	38.7	44.0	30.5	35.4	40.3
		62	THC	47.0	47.0	55.3	44.5	44.5	52.4	41.7	41.7	49.2	38.7	38.7	45.8	35.4	35.4	42.0
			SHC	38.8	47.0	55.3	36.6	44.5	52.4	34.2	41.7	49.2	31.6	38.7	45.8	28.8	35.4	42.0
		67	THC	48.9	48.9	53.8	45.8	45.8	52.2	42.6	42.6	50.4	39.1	39.1	48.4	35.5	35.5	45.4
			SHC	32.8	43.3	53.8	31.3	41.8	52.2	29.6	40.0	50.4	27.8	38.1	48.4	25.6	35.5	45.4
		72	THC	54.0	54.0	54.0	50.7	50.7	50.7	47.2	47.2	47.2	43.4	43.4	43.4	39.2	39.2	39.2
			SHC	22.8	33.4	43.9	21.3	31.9	42.4	19.7	30.3	40.8	18.0	28.6	39.1	16.3	26.8	37.3
		76	THC	–	58.6	58.6	–	55.2	55.2	–	–	–	–	–	–	–	–	–
			SHC	–	25.2	35.8	–	23.7	34.3	–	–	–	–	–	–	–	–	–
2250 Cfm	EA (wB)	58	THC	48.5	48.5	54.9	45.9	45.9	52.0	43.0	43.0	48.8	39.9	39.9	45.3	36.5	36.5	41.6
			SHC	42.2	48.5	54.9	39.8	45.9	52.0	37.2	43.0	48.8	34.4	39.9	45.3	31.4	36.5	41.6
		62	THC	48.6	48.6	57.0	45.9	45.9	54.0	43.0	43.0	50.8	39.9	39.9	47.2	36.5	36.5	43.3
			SHC	40.1	48.6	57.0	37.8	45.9	54.0	35.3	43.0	50.8	32.7	39.9	47.2	29.8	36.5	43.3
		67	THC	49.6	49.6	58.0	46.5	46.5	56.3	43.3	43.3	54.1	40.0	40.0	50.9	36.6	36.6	46.7
			SHC	34.8	46.4	58.0	33.2	44.7	56.3	31.4	42.8	54.1	29.1	40.0	50.9	26.4	36.6	46.7
		72	THC	54.6	54.6	54.6	51.3	51.3	51.3	47.7	47.7	47.7	43.8	43.8	43.8	39.6	39.6	40.5
			SHC	23.6	35.4	47.2	22.1	33.9	45.7	20.5	32.3	44.1	18.8	30.6	42.3	17.1	28.8	40.5
		76	THC	–	59.3	59.3	–	–	–	–	–	–	–	–	–	–	–	–
			SHC	–	26.2	38.0	–	–	–	–	–	–	–	–	–	–	–	–

LEGEND:

– – Do not operate
Cfm – Cubic feet per minute (supply air)
EAT(db) – Entering air temperature (dry bulb)
EAT(wb) – Entering air temperature (wet bulb)
SHC – Sensible heat capacity
TC – Total capacity

Table 15 – COOLING CAPACITIES - SECOND STAGE FULL LOAD 5 TONS

06 SIZE				AMBIENT TEMPERATURE														
				85			95			105			115			125		
				EA (dB)			EA (dB)			EA (dB)			EA (dB)			EA (dB)		
				75	80	85	75	80	85	75	80	85	75	80	85	75	80	85
1500 Cfm	EA (wB)	58	THC	54.0	54.0	61.2	51.3	51.3	58.3	48.6	48.6	55.2	47.0	47.0	53.4	44.5	44.5	50.6
			SHC	46.8	54.0	61.2	44.4	51.3	58.3	41.9	48.6	55.2	40.6	47.0	53.4	38.5	44.5	50.6
		62	THC	56.5	56.5	58.4	53.3	53.3	56.5	49.9	49.9	54.6	47.8	47.8	53.8	44.8	44.8	52.3
			SHC	42.3	50.3	58.4	40.4	48.5	56.5	38.5	46.5	54.6	37.8	45.8	53.8	36.4	44.3	52.3
		67	THC	62.1	62.1	62.1	58.6	58.6	58.6	55.0	55.0	55.0	52.5	52.5	52.5	49.1	49.1	49.1
			SHC	34.6	42.7	50.8	32.7	40.8	48.9	30.8	38.9	47.0	30.2	38.3	46.4	28.9	37.0	45.0
		72	THC	68.3	68.3	68.3	64.5	64.5	64.5	60.5	60.5	60.5	57.8	57.8	57.8	54.1	54.1	54.1
			SHC	26.7	34.8	43.0	24.8	33.0	41.1	22.9	31.1	39.2	22.4	30.5	38.6	21.1	29.2	37.3
		76	THC	–	73.5	73.5	–	69.5	69.5	–	65.3	65.3	–	62.3	62.3	–	58.4	58.4
			SHC	–	28.4	36.6	–	26.6	34.8	–	24.7	33	–	24.2	32.4	–	22.9	31.1
1750 Cfm	EA (wB)	58	THC	57.1	57.1	64.7	54.3	54.3	61.6	51.3	51.3	58.3	49.5	49.5	56.2	46.9	46.9	53.2
			SHC	49.6	57.1	64.7	47.0	54.3	61.6	44.3	51.3	58.3	42.9	49.5	56.2	40.6	46.9	53.2
		62	THC	58.4	58.4	64.5	55.0	55.0	62.5	51.6	51.6	60.2	49.7	49.7	58.3	46.9	46.9	55.4
			SHC	45.9	55.2	64.5	43.9	53.2	62.5	41.9	51.1	60.2	40.6	49.4	58.3	38.5	46.9	55.4
		67	THC	63.9	63.9	63.9	60.2	60.2	60.2	56.4	56.4	56.4	53.8	53.8	53.8	50.3	50.3	50.3
			SHC	37	46.4	55.8	35.1	44.5	53.9	33.1	42.5	51.9	32.5	41.9	51.3	31.1	40.5	49.8
		72	THC	70.2	70.2	70.2	66.2	66.2	66.2	62.0	62.0	62.0	59.1	59.1	59.1	55.3	55.3	55.3
			SHC	27.8	37.2	46.7	25.9	35.3	44.8	23.9	33.4	42.8	23.4	32.8	42.2	22	31.4	40.8
		76	THC	–	75.4	75.4	–	71.2	71.2	–	66.9	66.9	–	63.7	63.7	–	59.6	59.6
			SHC	–	29.8	39.4	–	27.9	37.5	–	26	35.6	–	25.4	35	–	24.1	33.6
2000 Cfm	EA (wB)	58	THC	59.8	59.8	67.6	56.7	56.7	64.3	53.6	53.6	60.8	51.6	51.6	58.5	48.8	48.8	55.3
			SHC	51.9	59.8	67.6	49.2	56.7	64.3	46.4	53.6	60.8	44.7	51.6	58.5	42.3	48.8	55.3
		62	THC	60.0	60.0	69.9	56.8	56.8	66.9	53.7	53.7	63.3	51.7	51.7	60.9	48.8	48.8	57.6
			SHC	49.1	59.5	69.9	46.7	56.8	66.9	44.0	53.7	63.3	42.5	51.7	60.9	40.1	48.8	57.6
		67	THC	65.3	65.3	65.3	61.5	61.5	61.5	57.5	57.5	57.5	54.8	54.8	55.9	51.1	51.1	54.4
			SHC	39.2	49.9	60.6	37.3	48.0	58.6	35.3	45.9	56.6	34.6	45.3	55.9	33.2	43.8	54.4
		72	THC	71.6	71.6	71.6	67.5	67.5	67.5	63.2	63.2	63.2	60.1	60.1	60.1	56.2	56.2	56.2
			SHC	28.8	39.5	50.2	26.9	37.6	48.3	24.9	35.6	46.3	24.3	35.0	45.7	22.9	33.6	44.3
		76	THC	–	76.9	76.9	–	72.6	72.6	–	68.1	68.1	–	64.8	64.8	–	60.5	60.5
			SHC	–	31.0	41.9	–	29.1	40	–	27.2	38	–	26.6	37.3	–	25.2	35.9
2250 Cfm	EA (wB)	58	THC	62.0	62.0	70.1	58.8	58.8	66.6	55.5	55.5	62.9	53.4	53.4	60.5	50.4	50.4	57.1
			SHC	53.8	62.0	70.1	51.0	58.8	66.6	48.0	55.5	62.9	46.3	53.4	60.5	43.7	50.4	57.1
		62	THC	62.0	62.0	72.9	58.9	58.9	69.3	55.5	55.5	65.5	53.4	53.4	62.9	50.4	50.4	59.4
			SHC	51.2	62.0	72.9	48.4	58.9	69.3	45.6	55.5	65.5	43.9	53.4	62.9	41.5	50.4	59.4
		67	THC	66.4	66.4	66.4	62.5	62.5	63.2	58.4	58.4	61.1	55.6	55.6	60.4	51.9	51.9	58.8
			SHC	41.4	53.3	65.2	39.4	51.3	63.2	37.4	49.3	61.1	36.7	48.5	60.4	35.2	47.0	58.8
		72	THC	72.6	72.6	72.6	68.4	68.4	68.4	64.1	64.1	64.1	60.9	60.9	60.9	56.8	56.8	56.8
			SHC	29.6	41.6	53.6	27.7	39.7	51.7	25.8	37.7	49.7	25.1	37.1	49.0	23.8	35.7	47.6
		76	THC	–	78.0	78.0	–	73.6	73.6	–	69.0	69.0	–	65.6	65.6	–	61.2	61.2
			SHC	–	32.2	44.3	–	30.3	42.3	–	28.3	40.3	–	27.7	39.6	–	26.3	38.1
2500 Cfm	EA (wB)	58	THC	63.8	63.8	72.2	60.5	60.5	68.6	57.1	57.1	64.7	54.8	54.8	62.1	51.7	51.7	58.6
			SHC	55.5	63.8	72.2	52.5	60.5	68.6	49.4	57.1	64.7	47.6	54.8	62.1	44.8	51.7	58.6
		62	THC	63.9	63.9	75.1	60.6	60.6	71.3	57.1	57.1	67.4	54.9	54.9	64.6	51.8	51.8	60.9
			SHC	52.7	63.9	75.1	49.9	60.6	71.3	46.9	57.1	67.4	45.2	54.9	64.6	42.6	51.8	60.9
		67	THC	67.2	67.2	69.7	63.3	63.3	67.7	59.1	59.1	65.5	56.2	56.2	64.6	52.5	52.5	62.9
			SHC	43.4	56.6	69.7	41.4	54.6	67.7	39.4	52.4	65.5	38.6	51.6	64.6	37.1	50.0	62.9
		72	THC	73.5	73.5	73.5	69.2	69.2	69.2	64.7	64.7	64.7	61.5	61.5	61.5	57.4	57.4	57.4
			SHC	30.5	43.7	56.9	28.6	41.8	55.0	26.6	39.8	53.0	26	39.1	52.3	24.6	37.7	50.8
		76	THC	–	78.9	78.9	–	74.4	74.4	–	69.7	69.7	–	66.2	66.2	–	61.8	61.8
			SHC	–	33.3	46.6	–	31.3	44.6	–	29.4	42.6	–	28.7	41.8	–	27.3	40.3

LEGEND:

– – Do not operate
Cfm – Cubic feet per minute (supply air)
EAT(db) – Entering air temperature (dry bulb)
EAT(wb) – Entering air temperature (wet bulb)
SHC – Sensible heat capacity
TC – Total capacity

ECONOMIZER, BAROMETRIC RELIEF AND PE PERFORMANCE

Vertical Application

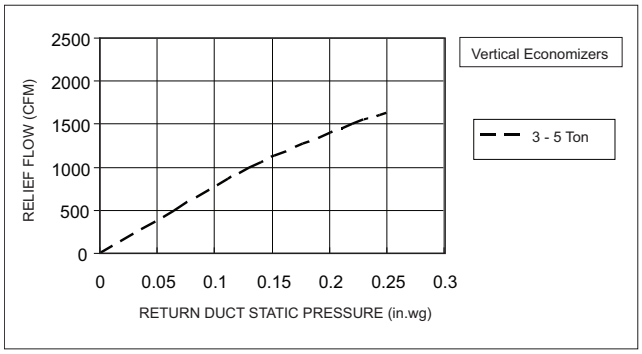

C11539

Fig. 7 - Barometric Relief Flow-Vertical 3 - 5 Ton

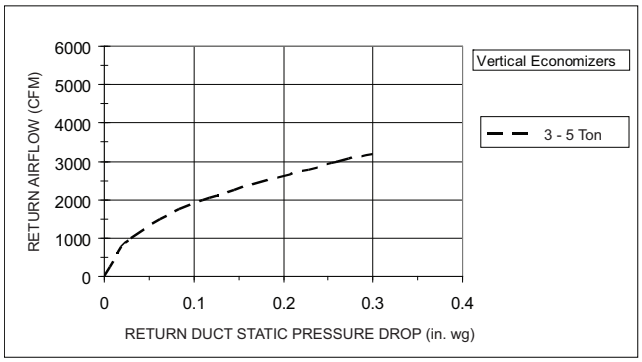

C11541

Fig. 8 - Return Air Pressure Drop-Vertical 3 - 5 Ton

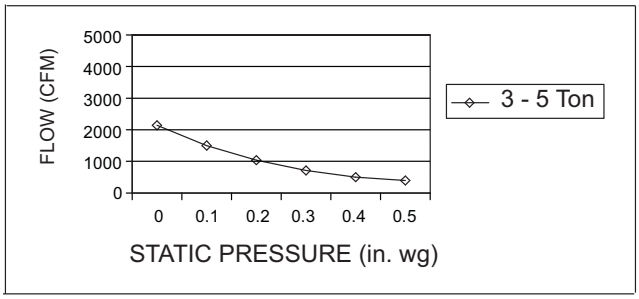

C11540

Fig. 9 - Vertical Power Exhaust Performance

Horizontal Application

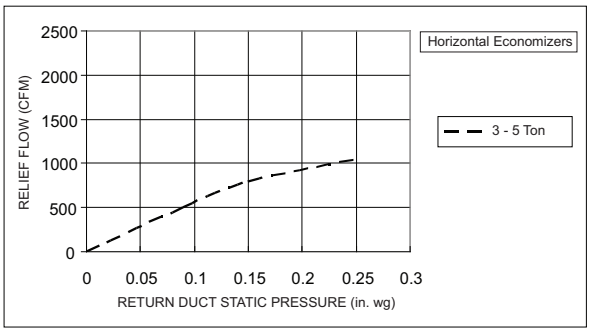

C11542

Fig. 10 - Barometric Relief Flow - Horizontal 3 - 5 Ton

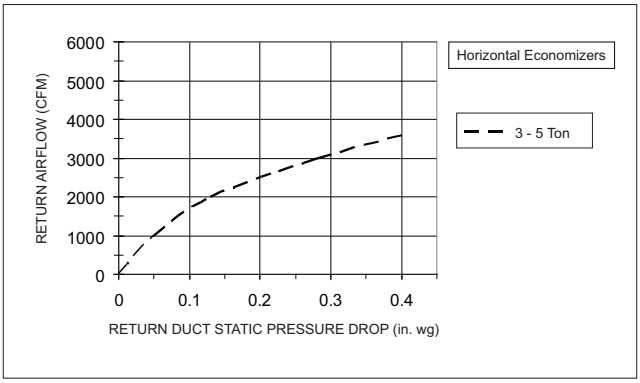

C11543

Fig. 11 - Return Air Pressure Drop - Horizontal 3 - 5 Ton

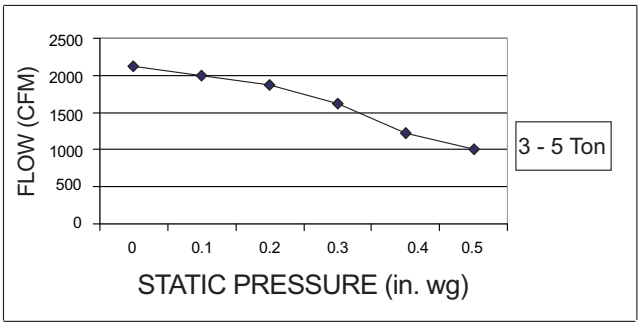

C12179

Fig. 12 - Horizontal Power Exhaust Performance

Table 16 – STATIC PRESSURE ADDERS (in. wg) - Factory Options and/or Accessories

Electric Heaters

CFM	600	900	1200	1400	1600	1800	2000	2200	2400	2600
1 Electric Heater Module	0.03	0.05	0.07	0.09	0.09	0.10	0.11	0.11	0.12	0.13
2 Electric Heater Modules	0.13	0.15	0.16	0.16	0.16	0.17	0.17	0.17	0.18	0.18

GENERAL FAN PERFORMANCE NOTES:

1. Interpolation is permissible. Do not extrapolate.
2. External static pressure is the static pressure difference between the return duct and the supply duct plus the static pressure caused by any FIOPs or accessories.
3. Tabular data accounts for pressure loss due to clean filters, unit casing, and wet coils. Factory options and accessories may add static pressure losses. Selection software is available, through your salesperson, to help you select the best motor/drive combination for your application.
4. The Fan Performance tables offer motor/drive recommendations. In cases when two motor/drive combinations would work, Carrier recommended the lower horsepower option.
5. For information on the electrical properties of Carrier motors, please see the Electrical information section of this book.
6. For more information on the performance limits of Carrier motors, see the application data section of this book.
7. The EPACT (Energy Policy Act) regulates energy requirements for specific types of indoor fan motors. Motors regulated by EPACT include any general purpose, T-frame (three-digit, 143 and larger), single-speed, foot mounted, polyphase, squirrel cage induction motors of NEMA (National Electrical Manufacturers Association) design A and B, manufactured for use in the United States. Ranging from 1 to 200 Hp, these continuous-duty motors operate on 230 and 460 volt, 60 Hz power. If a motor does not fit into these specifications, the motor does not have to be replaced by an EPACT compliant energy-efficient motor. Variable-speed motors are exempt from EPACT compliance requirements.

FAN PERFORMANCE
DIRECT DRIVE - ECM (Multi-Speed) INDOOR MOTOR

Table 17 – 50LC*004 Vertical Unit-Direct Drive

Speed (Torque) Tap	CFM	ESP	BHP
1	750	0.34	0.11
	900	0.18	0.11
	1050	–	–
	1125	–	–
	1200	–	–
	1275	–	–
	1350	–	–
	1425	–	–
	1500	–	–
2	750	0.55	0.18
	900	0.36	0.16
	1050	0.18	0.15
	1125	0.10	0.15
	1200	0.03	0.16
	1275	–	–
	1350	–	–
	1425	–	–
	1500	–	–
3	750	1.20	0.31
	900	1.00	0.39
	1050	0.79	0.38
	1125	0.67	0.37
	1200	0.56	0.35
	1275	0.44	0.34
	1350	0.32	0.32
	1425	0.21	0.31
	1500	–	–
4	750	1.35	0.45
	900	1.21	0.48
	1050	1.09	0.51
	1125	1.03	0.53
	1200	0.96	0.55
	1275	0.88	0.57
	1350	0.78	0.58
	1425	0.68	0.57
	1500	0.56	0.53
5	750	1.34	0.45
	900	1.32	0.48
	1050	1.09	0.53
	1125	1.04	0.55
	1200	1.00	0.57
	1275	0.95	0.60
	1350	0.90	0.62
	1425	0.84	0.65
	1500	0.78	0.68

* To convert BHP to watts, use 84% motor efficiency.

Table 18 – 50LC*004 Horizontal Unit-Direct Drive

Speed (Torque) Tap	CFM	ESP	BHP
1	750	0.40	0.15
	900	0.23	0.14
	1050	–	–
	1125	–	–
	1200	–	–
	1275	–	–
	1350	–	–
	1425	–	–
	1500	–	–
2	750	0.67	0.23
	900	0.47	0.21
	1050	0.29	0.19
	1125	0.21	0.18
	1200	0.13	0.18
	1275	0.06	0.20
	1350	–	–
	1425	–	–
	1500	–	–
3	750	1.28	0.44
	900	1.11	0.44
	1050	0.91	0.43
	1125	0.80	0.42
	1200	0.68	0.40
	1275	0.56	0.39
	1350	0.44	0.37
	1425	0.32	0.36
	1500	0.21	0.34
4	750	1.39	0.48
	900	1.32	0.51
	1050	1.23	0.55
	1125	1.18	0.57
	1200	1.11	0.59
	1275	1.03	0.60
	1350	0.94	0.62
	1425	0.84	0.61
	1500	0.73	0.59
5	750	1.40	0.48
	900	1.32	0.51
	1050	1.24	0.56
	1125	1.19	0.58
	1200	1.14	0.61
	1275	1.10	0.63
	1350	1.05	0.66
	1425	0.99	0.68
	1500	0.94	0.71

FAN PERFORMANCE (cont.)
DIRECT DRIVE - ECM (Multi-Speed) INDOOR MOTOR

Table 19 – 50LC*005 Vertical Unit-Direct Drive

Speed (Torque) Tap	CFM	ESP	BHP
1	1000	0.21	0.15
	1200	0.11	0.10
	1400	–	–
	1500	–	–
	1600	–	–
	1700	–	–
	1800	–	–
	1900	–	–
	2000	–	–
2	1000	0.94	0.38
	1200	0.68	0.35
	1400	0.40	0.31
	1500	0.24	0.28
	1600	0.10	0.26
	1700	–	–
	1800	–	–
	1900	–	–
	2000	–	–
3	1000	1.24	0.51
	1200	1.18	0.55
	1400	1.08	0.57
	1500	1.01	0.61
	1600	0.91	0.60
	1700	0.78	0.58
	1800	0.63	0.56
	1900	0.46	0.53
	2000	0.28	0.51
4	1000	1.23	0.51
	1200	1.13	0.57
	1400	1.04	0.64
	1500	1.00	0.74
	1600	0.95	0.71
	1700	0.89	0.74
	1800	0.82	0.77
	1900	0.73	0.79
	2000	0.63	0.82
5	1000	1.27	0.52
	1200	1.16	0.59
	1400	1.03	0.67
	1500	0.98	0.67
	1600	0.96	0.75
	1700	0.91	0.75
	1800	0.86	0.83
	1900	0.80	0.87
	2000	0.74	0.92

* To convert BHP to watts, use 84% motor efficiency.

Table 20 – 50LC*005 Horizontal Unit-Direct Drive

Speed (Torque) Tap	CFM	ESP	BHP
1	1000	0.23	0.15
	1200	0.15	0.15
	1400	0.08	0.17
	1500	0.02	0.18
	1600	–	–
	1700	–	–
	1800	–	–
	1900	–	–
	2000	–	–
2	1000	1.02	0.42
	1200	0.74	0.39
	1400	0.46	0.35
	1500	0.32	0.32
	1600	0.19	0.30
	1700	0.07	0.27
	1800	–	–
	1900	–	–
	2000	–	–
3	1000	1.33	0.54
	1200	1.23	0.59
	1400	1.05	0.63
	1500	0.94	0.65
	1600	0.81	0.62
	1700	0.67	0.59
	1800	0.52	0.56
	1900	0.37	0.53
	2000	0.22	0.50
4	1000	1.32	0.54
	1200	1.22	0.60
	1400	1.12	0.67
	1500	1.07	0.77
	1600	1.02	0.74
	1700	0.97	0.77
	1800	0.91	0.81
	1900	0.84	0.83
	2000	0.76	0.86
5	1000	1.35	0.55
	1200	1.25	0.61
	1400	1.12	0.68
	1500	1.07	0.68
	1600	1.05	0.76
	1700	1.01	0.76
	1800	0.96	0.84
	1900	0.91	0.89
	2000	0.87	0.93

FAN PERFORMANCE (cont.)
DIRECT DRIVE - ECM (Multi-Speed) INDOOR MOTOR

Table 21 – 50LC*006 Vertical Unit-Direct Drive

Speed (Torque) Tap	CFM	ESP	BHP
1	1250	0.19	0.18
	1500	0.03	0.19
	1750	–	–
	1875	–	–
	2000	–	–
	2125	–	–
	2250	–	–
	2375	–	–
	2500	–	–
2	1250	1.06	0.57
	1500	0.65	0.52
	1750	0.27	0.47
	1875	0.11	0.44
	2000	–	–
	2125	–	–
	2250	–	–
	2375	–	–
	2500	–	–
3	1250	1.38	0.73
	1500	1.00	0.72
	1750	0.60	0.67
	1875	0.41	0.63
	2000	0.22	0.60
	2125	0.04	0.57
	2250	–	–
	2375	–	–
	2500	–	–
4	1250	1.50	0.82
	1500	1.25	0.88
	1750	0.89	0.87
	1875	0.68	0.84
	2000	0.46	0.80
	2125	0.26	0.76
	2250	0.08	0.73
	2375	–	–
	2500	–	–
5	1250	1.55	0.85
	1500	1.36	0.94
	1750	0.89	1.02
	1875	0.68	1.05
	2000	0.74	1.03
	2125	0.53	0.99
	2250	0.31	0.94
	2375	0.08	0.90
	2500	–	–

* To convert BHP to watts, use 84% motor efficiency.

Table 22 – 50LC*006 Horizontal Unit-Direct Drive

Speed (Torque) Tap	CFM	ESP	BHP
1	1250	0.23	0.20
	1500	0.10	0.22
	1750	–	–
	1875	–	–
	2000	–	–
	2125	–	–
	2250	–	–
	2375	–	–
	2500	–	–
2	1250	1.19	0.62
	1500	0.80	0.57
	1750	0.42	0.51
	1875	0.24	0.48
	2000	0.06	0.44
	2125	–	–
	2250	–	–
	2375	–	–
	2500	–	–
3	1250	1.50	0.78
	1500	1.17	0.77
	1750	0.78	0.71
	1875	0.57	0.67
	2000	0.36	0.63
	2125	0.17	0.59
	2250	–	–
	2375	–	–
	2500	–	–
4	1250	1.64	0.85
	1500	1.42	0.92
	1750	1.09	0.92
	1875	0.90	0.90
	2000	0.69	0.86
	2125	0.47	0.81
	2250	0.28	0.77
	2375	0.11	0.73
	2500	0.00	0.67
5	1250	1.69	0.87
	1500	1.52	0.97
	1750	1.09	1.05
	1875	0.90	1.09
	2000	1.00	1.09
	2125	0.82	1.06
	2250	0.62	1.02
	2375	0.40	0.98
	2500	0.16	0.93

FAN PERFORMANCE (BELT DRIVE WITH VFD CONTROLLER & DISPLAY)

Table 23 – 50LC04** 3 PHASE 3 TON VERTICAL SUPPLY

CFM	Available External Static Pressure (in. wg)									
	0.2		0.4		0.6		0.8		1.0	
	RPM	BHP	RPM	BHP	RPM	BHP	RPM	BHP	RPM	BHP
900	**594**	**0.15**	**740**	**0.25**	867	0.37	981	0.52	1084	0.68
975	**618**	**0.17**	**758**	**0.28**	881	0.40	991	0.55	1092	0.71
1050	**642**	**0.19**	777	0.30	896	0.43	1003	0.58	1102	0.75
1125	**668**	**0.22**	797	0.34	912	0.47	1017	0.62	1113	0.79
1200	**695**	**0.25**	818	0.37	930	0.51	1032	0.66	1126	0.83
1275	**722**	**0.29**	841	0.41	949	0.55	1048	0.71	1140	0.88
1350	**750**	**0.33**	864	0.46	968	0.60	1065	0.76	1155	0.93
1425	778	0.37	888	0.50	989	0.65	1083	0.81	1171	0.99
1500	807	0.42	913	0.56	1011	0.71	1103	0.87	1188	1.05

CFM	Available External Static Pressure (in. wg)									
	1.2		1.4		1.6		1.8		2.0	
	RPM	BHP	RPM	BHP	RPM	BHP	RPM	BHP	RPM	BHP
900	1180	0.86	1269	1.05	1354	1.25	1434	1.47	**1511**	**1.70**
975	1186	0.89	1275	1.08	1358	1.29	1437	1.51	**1513**	**1.74**
1050	1194	0.92	1281	1.12	1363	1.32	1441	1.54	**1516**	**1.78**
1125	1204	0.97	1289	1.16	1370	1.37	1447	1.59	**1520**	**1.82**
1200	1215	1.01	1298	1.21	1378	1.42	1454	1.64	**1526**	**1.87**
1275	1227	1.06	1309	1.26	1387	1.47	1462	1.69	**1533**	**1.92**
1350	1240	1.12	1321	1.32	1397	1.53	**1471**	**1.75**	**1541**	**1.99**
1425	1254	1.18	1333	1.38	1409	1.59	**1481**	**1.82**	**–**	**–**
1500	1270	1.24	1347	1.45	1421	1.66	**1492**	**1.89**	**–**	**–**

NOTE: For more information, see General Fan Performance Notes.
Boldface indicates field–supplied drive is required.
Medium static 770–1175 RPM, 1.2 BHP max
High static 1035–1466 RPM, 2.4 BHP max

Table 24 – 50LC04** 3 PHASE 3 TON HORIZONTAL SUPPLY

CFM	Available External Static Pressure (in. wg)									
	0.2		0.4		0.6		0.8		1.0	
	RPM	BHP	RPM	BHP	RPM	BHP	RPM	BHP	RPM	BHP
900	**574**	**0.13**	**707**	**0.23**	817	0.34	913	0.47	999	0.61
975	**597**	**0.15**	**727**	**0.25**	835	0.37	929	0.50	1015	0.64
1050	**621**	**0.18**	**747**	**0.28**	853	0.40	946	0.53	1030	0.68
1125	**646**	**0.20**	**768**	**0.31**	872	0.43	964	0.57	1047	0.72
1200	**671**	**0.23**	790	0.34	892	0.47	982	0.61	1064	0.76
1275	**696**	**0.26**	812	0.38	912	0.51	1001	0.65	1082	0.81
1350	**723**	**0.30**	835	0.42	933	0.55	1020	0.70	1100	0.86
1425	**749**	**0.34**	859	0.46	955	0.60	1040	0.75	1119	0.91
1500	776	0.38	883	0.51	977	0.65	1061	0.80	1138	0.97

CFM	Available External Static Pressure (in. wg)									
	1.2		1.4		1.6		1.8		2.0	
	RPM	BHP	RPM	BHP	RPM	BHP	RPM	BHP	RPM	BHP
900	1078	0.77	1151	0.93	1220	1.11	1284	1.30	1346	1.49
975	1093	0.80	1165	0.97	1233	1.15	1297	1.33	1358	1.53
1050	1108	0.84	1180	1.01	1247	1.19	1311	1.38	1371	1.58
1125	1123	0.88	1195	1.05	1261	1.23	1325	1.42	1385	1.62
1200	1140	0.92	1210	1.10	1276	1.28	1339	1.47	1399	1.68
1275	1157	0.97	1226	1.15	1292	1.33	1354	1.53	1414	1.73
1350	1174	1.02	1243	1.20	1308	1.39	1370	1.59	1429	1.80
1425	1192	1.08	1260	1.26	1325	1.45	1386	1.65	1444	1.86
1500	1210	1.14	1278	1.33	1342	1.52	1403	1.72	1461	1.93

NOTE: For more information, see General Fan Performance Notes.
Boldface indicates field–supplied drive is required.
Medium static 770–1175 RPM, 1.2 BHP max
High static 1035–1466 RPM, 2.4 BHP max

FAN PERFORMANCE (BELT DRIVE WITH VFD CONTROLLER & DISPLAY) (cont.)

Table 25 – 50LC05** 3 PHASE 4 TON VERTICAL SUPPLY

CFM	Available External Static Pressure (in. wg)									
	0.2		0.4		0.6		0.8		1.0	
	RPM	BHP	RPM	BHP	RPM	BHP	RPM	BHP	RPM	BHP
1200	**695**	**0.25**	**818**	**0.37**	930	0.51	1032	0.66	1126	0.83
1300	**731**	**0.30**	**849**	**0.43**	955	0.57	1053	0.72	1145	0.89
1400	**769**	**0.36**	**880**	**0.49**	982	0.63	1077	0.79	1166	0.97
1500	**807**	**0.42**	**913**	**0.56**	1011	0.71	1103	0.87	1188	1.05
1600	**847**	**0.49**	948	0.63	1042	0.79	1130	0.96	1213	1.14
1700	**887**	**0.57**	983	0.72	1073	0.88	1158	1.06	1239	1.24
1800	928	0.66	1020	0.82	1106	0.98	1188	1.16	1266	1.35
1900	969	0.76	1057	0.92	1140	1.09	1219	1.28	1295	1.48
2000	1010	0.87	1095	1.04	1175	1.21	1251	1.41	1325	1.61

CFM	Available External Static Pressure (in. wg)									
	1.2		1.4		1.6		1.8		2.0	
	RPM	BHP	RPM	BHP	RPM	BHP	RPM	BHP	RPM	BHP
1200	1215	1.01	1298	1.21	1378	1.42	1454	1.64	1526	1.87
1300	1231	1.08	1313	1.28	1390	1.49	1465	1.71	1536	1.94
1400	1249	1.16	1329	1.36	1405	1.57	1478	1.79	1547	2.03
1500	1270	1.24	1347	1.45	1421	1.66	1492	1.89	1561	2.13
1600	1292	1.34	1367	1.54	1440	1.76	1509	1.99	1576	2.23
1700	1315	1.44	1389	1.65	1459	1.88	1527	2.11	1593	2.35
1800	1341	1.56	1412	1.77	1481	2.00	1547	2.23	1612	2.48
1900	1367	1.68	1437	1.90	1504	2.13	1569	2.37	1632	2.62
2000	1395	1.82	1463	2.04	1528	2.28	1591	2.52	**1653**	**2.77**

NOTE: For more information, see General Fan Performance Notes.
Boldface indicates field–supplied drive is required.
Medium Static 920–1303 RPM, 1.7 BHP max
High Static 1208–1639 RPM, 2.9 BHP max

Table 26 – 50LC05** 3 PHASE 4 TON HORIZONTAL SUPPLY

CFM	Available External Static Pressure (in. wg)									
	0.2		0.4		0.6		0.8		1.0	
	RPM	BHP	RPM	BHP	RPM	BHP	RPM	BHP	RPM	BHP
1200	**671**	**0.23**	**790**	**0.34**	**892**	**0.47**	982	0.61	1064	0.76
1300	**705**	**0.28**	**820**	**0.39**	**919**	**0.52**	1007	0.67	1088	0.82
1400	**740**	**0.33**	**851**	**0.45**	947	0.58	1034	0.73	1113	0.89
1500	**776**	**0.38**	**883**	**0.51**	977	0.65	1061	0.80	1138	0.97
1600	**813**	**0.45**	**916**	**0.58**	1007	0.73	1089	0.89	1165	1.05
1700	**851**	**0.52**	949	0.66	1038	0.81	1118	0.97	1192	1.15
1800	**888**	**0.60**	984	0.75	1069	0.90	1148	1.07	1221	1.25
1900	927	0.69	1019	0.84	1102	1.00	1179	1.18	1250	1.36
2000	965	0.78	1054	0.94	1135	1.11	1210	1.29	1280	1.48

CFM	Available External Static Pressure (in. wg)									
	1.2		1.4		1.6		1.8		2.0	
	RPM	BHP	RPM	BHP	RPM	BHP	RPM	BHP	RPM	BHP
1200	1140	0.92	1210	1.10	1276	1.28	1339	1.47	1399	1.68
1300	1162	0.99	1232	1.16	1297	1.35	1360	1.55	1419	1.75
1400	1186	1.06	1254	1.24	1319	1.43	1381	1.63	1439	1.84
1500	1210	1.14	1278	1.33	1342	1.52	1403	1.72	1461	1.93
1600	1236	1.23	1302	1.42	1365	1.62	1425	1.82	1483	2.04
1700	1262	1.33	1328	1.52	1390	1.72	1449	1.93	1505	2.15
1800	1289	1.44	1354	1.63	1415	1.84	1473	2.05	1529	2.27
1900	1317	1.55	1380	1.75	1441	1.96	1498	2.18	1553	2.41
2000	1345	1.68	1408	1.88	1467	2.10	1524	2.32	1579	2.55

NOTE: For more information, see General Fan Performance Notes.
Boldface indicates field–supplied drive is required.
Medium Static 920–1303 RPM, 1.7 BHP max
High Static 1208–1639 RPM, 2.9 max BHP

FAN PERFORMANCE (BELT DRIVE WITH VFD CONTROLLER & DISPLAY) (cont.)

Table 27 – 50LC06** 3 PHASE 5 TON VERTICAL SUPPLY

CFM	Available External Static Pressure (in. wg)									
	0.2		0.4		0.6		0.8		1.0	
	RPM	BHP	RPM	BHP	RPM	BHP	RPM	BHP	RPM	BHP
1500	**794**	**0.41**	**902**	**0.55**	**993**	**0.69**	1074	0.85	1147	1.00
1625	**840**	**0.49**	**945**	**0.64**	**1034**	**0.80**	1113	0.96	1185	1.13
1750	**888**	**0.59**	**988**	**0.75**	1075	0.92	1153	1.09	1223	1.26
1875	**936**	**0.70**	**1033**	**0.87**	1117	1.05	1193	1.23	1263	1.41
2000	**984**	**0.82**	1078	1.00	1160	1.19	1235	1.39	1303	1.58
2125	**1033**	**0.96**	1124	1.15	1204	1.35	1277	1.56	1343	1.76
2250	1083	1.11	1170	1.32	1248	1.53	1319	1.74	1385	1.96
2375	1133	1.28	1217	1.50	1293	1.72	1363	1.95	1427	2.17
2500	1183	1.47	1265	1.70	1339	1.93	1406	2.17	1470	2.41

CFM	Available External Static Pressure (in. wg)									
	1.2		1.4		1.6		1.8		2.0	
	RPM	BHP	RPM	BHP	RPM	BHP	RPM	BHP	RPM	BHP
1500	1214	1.16	1277	1.33	1336	1.50	1392	1.67	1445	1.85
1625	1251	1.30	1313	1.47	1371	1.65	1427	1.83	1479	2.02
1750	1289	1.44	1350	1.63	1407	1.81	1462	2.01	1514	2.20
1875	1327	1.60	1387	1.80	1444	1.99	1498	2.19	1550	2.40
2000	1366	1.78	1426	1.98	1482	2.19	1535	2.40	1586	2.61
2125	1406	1.97	1464	2.18	1520	2.40	1573	2.62	1623	2.84
2250	1446	2.18	1504	2.40	1559	2.62	1611	2.85	**1661**	**3.09**
2375	1487	2.40	1544	2.63	1598	2.87	**1650**	**3.11**	–	–
2500	1529	2.64	1585	2.89	**1638**	**3.13**	–	–	–	–

NOTE: For more information, see General Fan Performance Notes.
Boldface indicates field–supplied drive is required.

Medium Static 1035 – 1466 RPM, 2.4 BHP max
High Static 1303 – 1687 RPM, 2.9 max BHP

Table 28 – 50LC06** 3 PHASE 5 TON HORIZONTAL SUPPLY

CFM	Available External Static Pressure (in. wg)									
	0.2		0.4		0.6		0.8		1.0	
	RPM	BHP	RPM	BHP	RPM	BHP	RPM	BHP	RPM	BHP
1500	**725**	**0.33**	**840**	**0.46**	937	0.60	1023	0.75	1101	0.90
1625	**765**	**0.40**	**876**	**0.54**	970	0.68	1054	0.84	1131	1.00
1750	**806**	**0.48**	**912**	**0.63**	1004	0.78	1087	0.94	1162	1.11
1875	**847**	**0.57**	**950**	**0.72**	1039	0.88	1120	1.05	1194	1.23
2000	**889**	**0.66**	**988**	**0.83**	1075	1.00	1154	1.18	1226	1.36
2125	**931**	**0.78**	**1027**	**0.95**	1112	1.13	1189	1.31	1260	1.50
2250	**974**	**0.90**	1067	1.08	1149	1.27	1224	1.46	1294	1.66
2375	**1018**	**1.03**	1107	1.23	1187	1.43	1261	1.63	1329	1.84
2500	1061	1.19	1148	1.39	1226	1.59	1297	1.81	1364	2.02

CFM	Available External Static Pressure (in. wg)									
	1.2		1.4		1.6		1.8		2.0	
	RPM	BHP	RPM	BHP	RPM	BHP	RPM	BHP	RPM	BHP
1500	1172	1.06	1239	1.23	1302	1.40	1361	1.58	1418	1.77
1625	1201	1.16	1267	1.34	1329	1.52	1388	1.71	1444	1.90
1750	1231	1.28	1296	1.46	1358	1.65	1416	1.84	1472	2.04
1875	1262	1.41	1326	1.60	1387	1.79	1445	1.99	1499	2.20
2000	1294	1.55	1357	1.74	1417	1.95	1474	2.15	1528	2.36
2125	1326	1.70	1388	1.90	1447	2.11	1504	2.33	1557	2.55
2250	1359	1.87	1420	2.08	1479	2.29	1534	2.51	1587	2.74
2375	1393	2.05	1453	2.27	1511	2.49	1566	2.72	**1618**	**2.95**
2500	1427	2.24	1487	2.47	1543	2.70	**1597**	**2.94**	**1649**	**3.18**

NOTE: For more information, see General Fan Performance Notes.
Boldface indicates field–supplied drive is required.

Medium Static 1035 – 1466 RPM, 2.4 BHP max
High Static 1303 – 1687 RPM, 2.9 BHP max

Table 29 – PULLEY ADJUSTMENT

UNIT	MOTOR/ DRIVE COMBO	MOTOR PULLEY TURNS OPEN (RPM)										
		0.0	0.5	1.0	1.5	2.0	2.5	3.0	3.5	4.0	4.5	5.0
04	Standard Static	–	–	–	–	–	–	–	–	–	–	–
	Medium Static	1175	1135	1094	1054	1013	973	932	892	851	811	770
	High Static	1466	1423	1380	1337	1294	1251	1207	1164	1121	1078	1035
05	Standard Static	–	–	–	–	–	–	–	–	–	–	–
	Medium Static	1303	1265	1226	1188	1150	1112	1073	1035	997	958	920
	High Static	1639	1596	1553	1510	1467	1424	1380	1337	1294	1251	1208
06	Standard Static	–	–	–	–	–	–	–	–	–	–	–
	Medium Static	1466	1423	1380	1337	1294	1251	1207	1164	1121	1078	1035
	High Static	1687	1649	1610	1572	1533	1495	1457	1418	1380	1341	1303

– Factory settings

– Standard static uses direct drive motor

ELECTRICAL INFORMATION

Table 30 – 50LC*004 **3 TONS**

UNIT	V–Ph–Hz	VOLTAGE RANGE		COMP 1		OFM (ea)		IFM		
		MIN	MAX	RLA	LRA	WATTS	FLA	TYPE	EFF at Full Load	FLA
04	208–3–60	187	253	11.6	73	190	3.5	DD–STD	84.0%	5.8
						190	3.5	MED	81.5%	5.8
						190	3.5	HIGH	80.0%	7.1
	230–3–60	187	253	11.6	73	190	3.5	DD–STD	84.0%	5.8
						190	3.5	MED	81.5%	5.6
						190	3.5	HIGH	80.0%	6.8
	460–3–60	414	506	5.7	38	190	1.4	DD–STD	84.0%	3.2
						190	1.4	MED	81.5%	2.9
						190	1.4	HIGH	80.0%	3.8
	575–3–60	518	633	4.0	26	190	1.4	DD–STD	84.0%	3.2
						190	1.4	MED	81.5%	2.8
						190	1.4	HIGH	80.0%	3.5

Table 31 – 50LC*005 **4 TONS**

UNIT	V–Ph–Hz	VOLTAGE RANGE		COMP 1		OFM (ea)		IFM		
		MIN	MAX	RLA	LRA	WATTS	FLA	TYPE	EFF at Full Load	FLA
05	208–3–60	187	253	14.0	83	240	3.5	DD–STD	78.0%	7.4
						240	3.5	MED	81.5%	5.8
						240	3.5	HIGH	84.5%	8.6
	230–3–60	187	253	14.0	83	240	3.5	DD–STD	78.0%	7.4
						240	3.5	MED	81.5%	5.6
						240	3.5	HIGH	84.5%	7.8
	460–3–60	414	506	6.4	41	220	1.4	DD–STD	78.0%	4
						220	1.4	MED	81.5%	2.9
						220	1.4	HIGH	84.5%	3.8
	575–3–60	518	633	4.6	33	220	1.4	DD–STD	78.0%	4
						220	1.4	MED	81.5%	2.8
						220	1.4	HIGH	84.5%	4.5

Table 32 – 50LC*006 **5 TONS**

UNIT	V–Ph–Hz	VOLTAGE RANGE		COMP 1		OFM (ea)		IFM		
		MIN	MAX	RLA	LRA	WATTS	FLA	TYPE	EFF at Full Load	FLA
06	208–3–60	187	253	16.2	110	240	3.5	DD–STD	78.0%	7.4
						240	3.5	MED	80.0%	7.1
						240	3.5	HIGH	84.5%	8.6
	230–3–60	187	253	16.2	110	240	3.5	DD–STD	78.0%	7.4
						240	3.5	MED	80.0%	6.8
						240	3.5	HIGH	84.5%	7.8
	460–3–60	414	506	7.6	52	220	1.4	DD–STD	78.0%	4
						220	1.4	MED	80.0%	3.8
						220	1.4	HIGH	84.5%	3.8
	575–3–60	518	633	5.3	39	220	1.4	DD–STD	78.0%	4
						220	1.4	MED	80.0%	3.5
						220	1.4	HIGH	84.5%	4.5

Table 33 – 50LC*004

MCA/MOCP DETERMINATION NO C.O. OR UNPWRD C.O NON HACR BREAKER MODEL

UNIT	NOM. V–Ph–Hz	IFM TYPE	NO C.O. or UNPWR C.O.							
			NO P.E.				w/ P.E. (pwrd fr/ unit)			
			MCA	MOCP	DISC. SIZE		MCA	MOCP	DISC. SIZE	
					FLA	LRA			FLA	LRA
04	208/ 230–3–60	DD–STD	24.0	30	24	83	26.0	30	26	85
			24/24	30/30	24/24	83/83	26/26	30/30	26/26	85/85
			24/27	30/30	24/25	83/83	27/29	30/30	26/27	85/85
			30/33	30/35	27/31	83/83	32/36	35/40	30/33	85/85
			35/39	35/40	32/36	83/83	37/41	40/45	34/38	85/85
			49/55	50/60	45/51	83/83	51/58	60/60	47/53	85/85
		MED	24/24	30/30	24/24	100	26/26	30/30	26/26	102
			24/24	30/30	24/24	100/100	26/26	30/30	26/26	102/102
			24/27	30/30	24/24	100/100	27/29	30/30	26/27	102/102
			30/33	30/35	27/30	100/100	32/36	35/40	30/33	102/102
			35/39	35/40	32/36	100/100	37/41	40/45	34/38	102/102
			49/55	50/60	45/51	100/100	51/58	60/60	47/53	102/102
		HIGH	25/25	30/30	26/25	104	27/27	30/30	28/27	106
			25/25	30/30	26/25	104/104	27/27	30/30	28/27	106/106
			26/28	30/30	26/26	104/104	28/30	30/35	28/28	106/106
			32/35	35/35	29/32	104/104	34/37	35/40	31/34	106/106
			36/40	40/45	33/37	104/104	39/43	40/45	36/39	106/106
			51/57	60/60	47/52	104/104	53/59	60/60	49/54	106/106
	460–3–60	DD–STD	12.0	15	12	42	13.0	15	13	43
			13	15	12	42	14	15	13	43
			17	20	16	42	19	20	17	43
			21	25	20	42	23	25	21	43
			25	30	23	42	26	30	24	43
		MED	11.0	15	12	50	12.0	15	13	51
			13	15	12	50	14	15	13	51
			17	20	16	50	18	20	17	51
			21	25	19	50	22	25	20	51
			25	25	23	50	26	30	24	51
		HIGH	12.0	15	13	52	13.0	15	14	53
			14	15	13	52	15	15	14	53
			18	20	17	52	19	20	18	53
			22	25	20	52	23	25	21	53
			26	30	24	52	27	30	25	53
	575–3–60	DD–STD	10.0	15	10	30	12.0	15	12	32
			16	20	14	30	18	20	16	32
			21	25	20	30	24	25	22	32
		MED	9.0	15	9	36	11.0	15	12	38
			15	15	14	36	17	20	16	38
			21	25	19	36	23	25	21	38
		HIGH	10.0	15	10	40	12.0	15	12	42
			16	20	15	40	18	20	17	42
			22	25	20	40	24	25	22	42

Table 34 – 50LC*005

MCA/MOCP DETERMINATION NO C.O. OR UNPWRD C.O NON HACR BREAKER MODEL

UNIT	NOM. V–Ph–Hz	IFM TYPE	NO C.O. or UNPWR C.O.							
			NO P.E.				w/ P.E. (pwrd fr/ unit)			
			MCA	MOCP	DISC. SIZE		MCA	MOCP	DISC. SIZE	
					FLA	LRA			FLA	LRA
05	208/ 230–3–60	DD–STD	28.0	40	29	94	30.0	40	31	96
			28/29	40/40	29/29	94/94	30/31	40/40	31/31	96/96
			32/35	40/40	29/33	94/94	34/38	40/40	32/35	96/96
			51/57	60/60	47/53	94/94	53/60	60/60	49/55	96/96
			64/72	70/80	59/67	94/94	66/75	70/80	61/69	96/96
		MED	27/27	40/40	27/27	110	29/29	40/40	29/29	112
			27/27	40/40	27/27	110/110	29/29	40/40	29/29	112/112
			30/33	40/40	27/30	110/110	32/36	40/40	30/33	112/112
			49/55	50/60	45/51	110/110	51/58	60/60	47/53	112/112
			62/70	70/80	57/65	110/110	64/73	70/80	59/67	112/112
		HIGH	30/29	40/40	30/29	140	32/31	45/40	32/31	142
			30/29	40/40	30/29	140/140	32/32	45/40	32/31	142/142
			33/36	40/40	31/33	140/140	36/38	45/40	33/35	142/142
			53/58	60/60	48/53	140/140	55/60	60/70	50/55	142/142
			66/73	70/80	60/67	140/140	68/75	70/80	62/69	142/142
	460–3–60	DD–STD	13.0	20	14	46	14.0	20	15	47
			14	20	14	46	15	20	15	47
			22	25	20	46	24	25	22	47
			26	30	24	46	27	30	25	47
			40	40	36	46	41	45	38	47
		MED	12.0	15	12	53	13.0	15	13	54
			13	15	12	53	14	15	13	54
			21	25	19	53	22	25	20	54
			25	25	23	53	26	30	24	54
			38	40	35	53	40	40	36	54
		HIGH	13.0	15	13	69	14.0	20	14	70
			14	15	13	69	15	20	14	70
			22	25	20	69	23	25	21	70
			26	30	24	69	27	30	25	70
			39	40	36	69	41	45	37	70
	575–3–60	DD–STD	11.0	15	12	38	13.0	15	14	40
			17	20	15	38	19	20	17	40
			22	25	20	38	25	25	23	40
		MED	10.0	15	10	43	12.0	15	12	45
			15	15	14	43	17	20	16	45
			21	25	19	43	23	25	21	45
		HIGH	12.0	15	12	56	14.0	15	14	58
			17	20	16	56	20	20	18	58
			23	25	21	56	25	30	23	58

Table 35 – 50LC*006

MCA/MOCP DETERMINATION NO C.O. OR UNPWRD C.O NON HACR BREAKER MODEL

UNIT	NOM. V–Ph–Hz	IFM TYPE	NO C.O. or UNPWR C.O.							
			NO P.E.				w/ P.E. (pwrd fr/ unit)			
			MCA	MOCP	DISC. SIZE		MCA	MOCP	DISC. SIZE	
					FLA	LRA			FLA	LRA
06	208/ 230–3–60	DD–STD	31.0	45	31	121	33.0	45	33	123
			31/31	45/45	31/31	121/121	33/33	45/45	33/33	123/123
			37/41	45/45	34/38	121/121	39/43	45/45	36/40	123/123
			51/57	60/60	47/53	121/121	53/60	60/60	49/55	123/123
			64/72	70/80	59/67	121/121	66/75	70/80	61/69	123/123
			78/89	80/90	72/82	121/121	81/91	90/100	74/84	123/123
		MED	31/31	45/45	31/30	141	33/33	45/45	33/33	143
			31/31	45/45	31/30	141/141	33/33	45/45	33/33	143/143
			36/40	45/45	33/37	141/141	39/43	45/45	36/39	143/143
			51/57	60/60	47/52	141/141	53/59	60/60	49/54	143/143
			64/72	70/80	59/66	141/141	66/74	70/80	61/68	143/143
			78/88	80/90	72/81	141/141	80/91	90/100	74/83	143/143
		HIGH	32/32	45/45	33/32	167	34/34	50/45	35/34	169
			32/32	45/45	33/32	167/167	34/34	50/45	35/34	169/169
			38/41	45/45	35/38	167/167	41/44	50/45	37/40	169/169
			53/58	60/60	48/53	167/167	55/60	60/70	50/55	169/169
			66/73	70/80	60/67	167/167	68/75	70/80	62/69	169/169
			80/90	80/90	73/82	167/167	82/92	90/100	76/85	169/169
	460–3–60	DD–STD	15.0	20	15	57	16.0	20	16	58
			15	20	15	57	16	20	16	58
			22	25	20	57	24	25	22	58
			26	30	24	57	27	30	25	58
			40	40	36	57	41	45	38	58
			43	45	40	57	45	45	41	58
		MED	15.0	20	15	66	16.0	20	16	67
			15	20	15	66	16	20	16	67
			22	25	20	66	23	25	21	67
			26	30	24	66	27	30	25	67
			39	40	36	66	41	45	37	67
			43	45	40	66	44	45	41	67
		HIGH	15.0	20	15	80	16.0	20	16	81
			15	20	15	80	16	20	16	81
			22	25	20	80	23	25	21	81
			26	30	24	80	27	30	25	81
			39	40	36	80	41	45	37	81
			43	45	40	80	44	45	41	81
	575–3–60	DD–STD	12.0	15	12	44	14.0	20	14	46
			22	25	20	44	25	25	23	46
			34	35	31	44	36	40	33	46
		MED	12.0	15	12	53	13.0	15	14	55
			22	25	20	53	24	25	22	55
			33	35	31	53	36	40	33	55
		HIGH	13.0	15	13	62	14.0	20	15	64
			23	25	21	62	25	30	23	64
			35	35	32	62	37	40	34	64

Table 36 – 50LC*004 **MCA/MOCP DETERMINATION WITH POWERED CONVENIENCE OUTLET NON HACR BREAKER MODEL**

UNIT	NOM. V–Ph–Hz	IFM TYPE	w/ PWRD C.O.							
			NO P.E.				w/ P.E. (pwrd fr/ unit)			
			MCA	MOCP	DISC. SIZE		MCA	MOCP	DISC. SIZE	
					FLA	LRA			FLA	LRA
04	208/230–3–60	DD–STD	29.0	40	30	88	31.0	40	32	90
			29/29	40/40	30/30	88/88	31/31	40/40	32/32	90/90
			30/33	40/40	30/30	88/88	33/35	40/40	32/32	90/90
			36/39	40/40	33/36	88/88	38/42	40/45	35/38	90/90
			41/45	45/45	37/41	88/88	43/47	45/50	40/43	90/90
			55/61	60/70	51/56	88/88	57/64	60/70	53/59	90/90
		MED	29/28	40/40	30/29	105	31/30	40/40	32/32	107
			29/28	40/40	30/29	105/105	31/30	40/40	32/32	107/107
			30/33	40/40	30/30	105/105	33/35	40/40	32/32	107/107
			36/39	40/40	33/36	105/105	38/42	40/45	35/38	107/107
			41/45	45/45	37/41	105/105	43/47	45/50	40/43	107/107
			55/61	60/70	51/56	105/105	57/64	60/70	53/58	107/107
		HIGH	30/30	40/40	31/31	109	32/32	40/40	33/33	111
			30/30	40/40	31/31	109/109	32/32	40/40	33/33	111/111
			32/34	40/40	31/31	109/109	34/36	40/40	33/33	111/111
			38/41	40/45	35/37	109/109	40/43	40/45	37/40	111/111
			42/46	45/50	39/42	109/109	45/49	45/50	41/45	111/111
			57/63	60/70	52/58	109/109	59/65	60/70	54/60	111/111
	460–3–60	DD–STD	14.0	20	14	44	15.0	20	16	45
			16	20	14	44	17	20	16	45
			20	20	18	44	21	25	20	45
			24	25	22	44	25	30	23	45
			28	30	26	44	29	30	27	45
		MED	14.0	20	14	52	15.0	20	15	53
			15	20	14	52	17	20	15	53
			20	20	18	52	21	25	19	53
			24	25	22	52	25	25	23	53
			27	30	25	52	29	30	26	53
		HIGH	15.0	20	15	54	16.0	20	16	55
			17	20	15	54	18	20	16	55
			21	25	19	54	22	25	20	55
			25	25	23	54	26	30	24	55
			29	30	26	54	30	30	27	55
	575–3–60	DD–STD	11.0	15	12	32	13.0	15	14	34
			18	20	16	32	20	25	18	34
			23	25	22	32	26	30	24	34
		MED	11.0	15	11	38	13.0	15	14	40
			17	20	16	38	20	20	18	40
			23	25	21	38	25	30	23	40
		HIGH	12.0	15	12	42	14.0	15	14	44
			18	20	17	42	20	25	19	44
			24	25	22	42	26	30	24	44

Table 37 – 50LC*005 **MCA/MOCP DETERMINATION WITH POWERED CONVENIENCE OUTLET NON HACR BREAKER MODEL**

UNIT	NOM. V–Ph–Hz	IFM TYPE	w/ PWRD C.O.							
			NO P.E.				w/ P.E. (pwrd fr/ unit)			
			MCA	MOCP	DISC. SIZE		MCA	MOCP	DISC. SIZE	
					FLA	LRA			FLA	LRA
05	208/230–3–60	DD–STD	33.0	45	34	99	35.0	45	36	101
			33/35	45/45	34/34	99/99	35/37	45/45	36/36	101/101
			38/41	45/45	35/38	99/99	40/44	45/45	37/40	101/101
			57/63	60/70	52/58	99/99	59/66	60/70	55/60	101/101
			70/78	80/80	64/72	99/99	72/81	80/90	67/74	101/101
		MED	32/31	45/45	32/32	115	34/33	45/45	35/34	117
			32/33	45/45	32/32	115/115	34/35	45/45	35/34	117/117
			36/39	45/45	33/36	115/115	38/42	45/45	35/38	117/117
			55/61	60/70	51/56	115/115	57/64	60/70	53/58	117/117
			68/76	70/80	63/70	115/115	70/79	80/80	65/72	117/117
		HIGH	34/34	45/45	36/35	145	36/36	50/45	38/37	147
			34/35	45/45	36/35	145/145	36/38	50/45	38/37	147/147
			39/42	45/45	36/39	145/145	42/44	50/45	38/41	147/147
			59/64	60/70	54/59	145/145	61/66	70/70	56/61	147/147
			72/79	80/80	66/73	145/145	74/81	80/90	68/75	147/147
	460–3–60	DD–STD	16.0	20	16	48	17.0	20	17	49
			17	20	16	48	18	20	17	49
			25	25	23	48	26	30	24	49
			29	30	26	48	30	30	28	49
			42	45	39	48	44	45	40	49
		MED	15.0	20	15	55	16.0	20	16	56
			15	20	15	55	17	20	16	56
			24	25	22	55	25	25	23	56
			27	30	25	55	29	30	26	56
			41	45	38	55	42	45	39	56
		HIGH	15.0	20	16	71	16.0	20	17	72
			17	20	16	71	18	20	17	72
			25	25	23	71	26	30	24	72
			29	30	26	71	30	30	27	72
			42	45	39	71	43	45	40	72
	575–3–60	DD–STD	13.0	15	13	40	15.0	20	16	42
			19	20	17	40	21	25	19	42
			24	25	22	40	27	30	25	42
		MED	12.0	15	12	45	14.0	15	14	47
			17	20	16	45	20	20	18	47
			23	25	21	45	25	30	23	47
		HIGH	13.0	15	14	58	15.0	20	16	60
			19	20	18	58	22	25	20	60
			25	25	23	58	27	30	25	60

Table 38 – 50LC*006 **MCA/MOCP DETERMINATION WITH POWERED CONVENIENCE OUTLET NON HACR BREAKER MODEL**

UNIT	NOM. V–Ph–Hz	IFM TYPE	w/ PWRD C.O.							
			NO P.E.				w/ P.E. (pwrd fr/ unit)			
			MCA	MOCP	DISC. SIZE		MCA	MOCP	DISC. SIZE	
					FLA	LRA			FLA	LRA
06	208/ 230–3–60	DD–STD	36.0	50	37	126	38.0	50	39	128
			36/36	50/50	37/37	126/126	38/38	50/50	39/39	128/128
			43/47	50/50	39/43	126/126	45/49	50/50	41/45	128/128
			57/63	60/70	52/58	126/126	59/66	60/70	55/60	128/128
			70/78	80/80	64/72	126/126	72/81	80/90	67/74	128/128
			84/95	90/100	78/87	126/126	87/97	90/100	80/90	128/128
		MED	36/35	50/50	36/36	146	38/37	50/50	39/38	148
			36/35	50/50	36/36	146/146	38/37	50/50	39/38	148/148
			42/46	50/50	39/42	146/146	45/49	50/50	41/45	148/148
			57/63	60/70	52/58	146/146	59/65	60/70	54/60	148/148
			70/78	70/80	64/71	146/146	72/80	80/90	66/74	148/148
			84/94	90/100	77/87	146/146	86/97	90/100	79/89	148/148
		HIGH	37/36	50/50	38/37	172	39/38	50/50	40/39	174
			37/36	50/50	38/37	172/172	39/38	50/50	40/39	174/174
			44/47	50/50	41/44	172/172	47/50	50/50	43/46	174/174
			59/64	60/70	54/59	172/172	61/66	70/70	56/61	174/174
			72/79	80/80	66/73	172/172	74/81	80/90	68/75	174/174
			86/96	90/100	79/88	172/172	88/98	90/100	81/90	174/174
	460–3–60	DD–STD	17.0	20	17	59	18.0	25	19	60
			17	20	17	59	18	25	19	60
			25	25	23	59	26	30	24	60
			29	30	26	59	30	30	28	60
			42	45	39	59	44	45	40	60
			46	50	42	59	47	50	44	60
		MED	17.0	20	17	68	18.0	25	18	69
			17	20	17	68	18	25	18	69
			25	25	23	68	26	30	24	69
			29	30	26	68	30	30	27	69
			42	45	39	68	43	45	40	69
			46	50	42	68	47	50	43	69
		HIGH	17.0	20	17	82	18.0	25	18	83
			17	20	17	82	18	25	18	83
			25	25	23	82	26	30	24	83
			29	30	26	82	30	30	27	83
			42	45	39	82	43	45	40	83
			46	50	42	82	47	50	43	83
	575–3–60	DD–STD	14.0	20	14	46	16.0	20	16	48
			24	25	22	46	27	30	25	48
			36	40	33	46	38	40	35	48
		MED	13.0	15	14	55	15.0	20	16	57
			24	25	22	55	26	30	24	57
			35	40	33	55	38	40	35	57
		HIGH	14.0	20	15	64	16.0	20	17	66
			25	25	23	64	27	30	25	66
			37	40	34	64	39	40	36	66

Table 39 – 50LC*004 **MCA/MOCP DETERMINATION NO C.O. OR UNPWRD C.O. HACR BREAKER MODEL**

UNIT	NOM. V–Ph–Hz	IFM TYPE	NO C.O. or UNPWR C.O.							
			NO P.E.				w/ P.E. (pwrd fr/ unit)			
			MCA	HACR BRKR	DISC. SIZE		MCA	HACR BRKR	DISC. SIZE	
					FLA	LRA			FLA	LRA
04	208/ 230–3–60	DD–STD	24.0	30	24	83	26.0	30	26	85
			24/24	30/30	24/24	83/83	26/26	30/30	26/26	85/85
			27/27	30/30	24/25	83/83	29/29	30/30	26/27	85/85
			33/33	35/35	27/31	83/83	36/36	40/40	30/33	85/85
			39/39	40/40	32/36	83/83	41/41	45/45	34/38	85/85
			55/55	60/60	45/51	83/83	58/58	60/60	47/53	85/85
		MED	24/24	30/30	24/24	100	26/26	30/30	26/26	102
			24/24	30/30	24/24	100/100	26/26	30/30	26/26	102/102
			27/27	30/30	24/24	100/100	29/29	30/30	26/27	102/102
			33/33	35/35	27/30	100/100	36/36	40/40	30/33	102/102
			39/39	40/40	32/36	100/100	41/41	45/45	34/38	102/102
			55/55	60/60	45/51	100/100	58/58	60/60	47/53	102/102
		HIGH	25/25	30/30	26/25	104	27/27	30/30	28/27	106
			25/25	30/30	26/25	104/104	27/27	30/30	28/27	106/106
			28/28	30/30	26/26	104/104	30/30	35/35	28/28	106/106
			35/35	35/35	29/32	104/104	37/37	40/40	31/34	106/106
			40/40	45/45	33/37	104/104	43/43	45/45	36/39	106/106
			57/57	60/60	47/52	104/104	59/59	60/60	49/54	106/106
	460–3–60	DD–STD	12.0	15	12	42	13.0	15	13	43
			13	15	12	42	14	15	13	43
			17	20	16	42	19	20	17	43
			21	25	20	42	23	25	21	43
			25	30	23	42	26	30	24	43
		MED	11.0	15	12	50	12.0	15	13	51
			13	15	12	50	14	15	13	51
			17	20	16	50	18	20	17	51
			21	25	19	50	22	25	20	51
			25	25	23	50	26	30	24	51
		HIGH	12.0	15	13	52	13.0	15	14	53
			14	15	13	52	15	15	14	53
			18	20	17	52	19	20	18	53
			22	25	20	52	23	25	21	53
			26	30	24	52	27	30	25	53
	575–3–60	DD–STD	10.0	15	10	30	12.0	15	12	32
			16	20	14	30	18	20	16	32
			21	25	20	30	24	25	22	32
		MED	9.0	15	9	36	11.0	15	12	38
			15	15	14	36	17	20	16	38
			21	25	19	36	23	25	21	38
		HIGH	10.0	15	10	40	12.0	15	12	42
			16	20	15	40	18	20	17	42
			22	25	20	40	24	25	22	42

For units with factory installed HACR breaker, the MCA and MOCP values (208/230/3/60 only) are intentionally increased so only one MCA and MOCP can be listed.
Example: A unit without the factory installed HACR breaker has a MCA of 30/33 and MOCP of 30/35 at 208/230V respectively. The values change to 33/33 MCA and 35/35 MOCP for a unit with factory installed HACR breaker. This is to insure maximum protection.

Table 40 – 50LC*005 **MCA/MOCP DETERMINATION NO C.O. OR UNPWRD C.O. HACR BREAKER MODEL**

UNIT	NOM. V–Ph–Hz	IFM TYPE	NO C.O. or UNPWR C.O.							
			NO P.E.				w/ P.E. (pwrd fr/ unit)			
			MCA	HACR BRKR	DISC. SIZE		MCA	HACR BRKR	DISC. SIZE	
					FLA	LRA			FLA	LRA
05	208/230–3–60	DD–STD	28.0	40	29	94	30.0	40	31	96
			29/29	40/40	29/29	94/94	31/31	40/40	31/31	96/96
			35/35	40/40	29/33	94/94	38/38	40/40	32/35	96/96
			57/57	60/60	47/53	94/94	60/60	60/60	49/55	96/96
			72/72	80/80	59/67	94/94	75/75	80/80	61/69	96/96
		MED	27/27	40/40	27/27	110	29/29	40/40	29/29	112
			27/27	40/40	27/27	110/110	29/29	40/40	29/29	112/112
			33/33	40/40	27/30	110/110	36/36	40/40	30/33	112/112
			55/55	60/60	45/51	110/110	58/58	60/60	47/53	112/112
			70/70	80/80	57/65	110/110	73/73	80/80	59/67	112/112
		HIGH	30/30	40/40	30/29	140	32/32	45/45	32/31	142
			30/30	40/40	30/29	140/140	32/32	45/45	32/31	142/142
			36/36	40/40	31/33	140/140	38/38	45/45	33/35	142/142
			58/58	60/60	48/53	140/140	60/60	70/70	50/55	142/142
			73/73	80/80	60/67	140/140	75/75	80/80	62/69	142/142
	460–3–60	DD–STD	13.0	20	14	46	14.0	20	15	47
			14	20	14	46	15	20	15	47
			22	25	20	46	24	25	22	47
			26	30	24	46	27	30	25	47
			40	40	36	46	41	45	38	47
		MED	12.0	15	12	53	13.0	15	13	54
			13	15	12	53	14	15	13	54
			21	25	19	53	22	25	20	54
			25	25	23	53	26	30	24	54
			38	40	35	53	40	40	36	54
		HIGH	13.0	15	13	69	14.0	20	14	70
			14	15	13	69	15	20	14	70
			22	25	20	69	23	25	21	70
			26	30	24	69	27	30	25	70
			39	40	36	69	41	45	37	70
	575–3–60	DD–STD	11.0	15	12	38	13.0	15	14	40
			17	20	15	38	19	20	17	40
			22	25	20	38	25	25	23	40
		MED	10.0	15	10	43	12.0	15	12	45
			15	15	14	43	17	20	16	45
			21	25	19	43	23	25	21	45
		HIGH	12.0	15	12	56	14.0	15	14	58
			17	20	16	56	20	20	18	58
			23	25	21	56	25	30	23	58

For units with factory installed HACR breaker, the MCA and MOCP values (208/230/3/60 only) are intentionally increased so only one MCA and MOCP can be listed.

Example: A unit without the factory installed HACR breaker has a MCA of 30/33 and MOCP of 30/35 at 208/230V respectively. The values change to 33/33 MCA and 35/35 MOCP for a unit with factory installed HACR breaker. This is to insure maximum protection.

Table 41 – 50LC*006 **MCA/MOCP DETERMINATION NO C.O. OR UNPWRD C.O. HACR BREAKER MODEL**

UNIT	NOM. V–Ph–Hz	IFM TYPE	NO C.O. or UNPWR C.O.							
			NO P.E.				w/ P.E. (pwrd fr/ unit)			
			MCA	HACR BRKR	DISC. SIZE		MCA	HACR BRKR	DISC. SIZE	
					FLA	LRA			FLA	LRA
06	208/ 230–3–60	DD–STD	31.0	45	31	121	33.0	45	33	123
			31/31	45/45	31/31	121/121	33/33	45/45	33/33	123/123
			41/41	45/45	34/38	121/121	43/43	45/45	36/40	123/123
			57/57	60/60	47/53	121/121	60/60	60/60	49/55	123/123
			72/72	80/80	59/67	121/121	75/75	80/80	61/69	123/123
			89/89	90/90	72/82	121/121	91/91	100/100	74/84	123/123
		MED	31/31	45/45	31/30	141	33/33	45/45	33/33	143
			31/31	45/45	31/30	141/141	33/33	45/45	33/33	143/143
			40/40	45/45	33/37	141/141	43/43	45/45	36/39	143/143
			57/57	60/60	47/52	141/141	59/59	60/60	49/54	143/143
			72/72	80/80	59/66	141/141	74/74	80/80	61/68	143/143
			88/88	90/90	72/81	141/141	91/91	100/100	74/83	143/143
		HIGH	32/32	45/45	33/32	167	34/34	50/50	35/34	169
			32/32	45/45	33/32	167/167	34/34	50/50	35/34	169/169
			41/41	45/45	35/38	167/167	44/44	50/50	37/40	169/169
			58/58	60/60	48/53	167/167	60/60	70/70	50/55	169/169
			73/73	80/80	60/67	167/167	75/75	80/80	62/69	169/169
			90/90	90/90	73/82	167/167	92/92	100/100	76/85	169/169
	460–3–60	DD–STD	15.0	20	15	57	16.0	20	16	58
			15	20	15	57	16	20	16	58
			22	25	20	57	24	25	22	58
			26	30	24	57	27	30	25	58
			40	40	36	57	41	45	38	58
			43	45	40	57	45	45	41	58
		MED	15.0	20	15	66	16.0	20	16	67
			15	20	15	66	16	20	16	67
			22	25	20	66	23	25	21	67
			26	30	24	66	27	30	25	67
			39	40	36	66	41	45	37	67
			43	45	40	66	44	45	41	67
		HIGH	15.0	20	15	80	16.0	20	16	81
			15	20	15	80	16	20	16	81
			22	25	20	80	23	25	21	81
			26	30	24	80	27	30	25	81
			39	40	36	80	41	45	37	81
			43	45	40	80	44	45	41	81
	575–3–60	DD–STD	12.0	15	12	44	14.0	20	14	46
			22	25	20	44	25	25	23	46
			34	35	31	44	36	40	33	46
		MED	12.0	15	12	53	13.0	15	14	55
			22	25	20	53	24	25	22	55
			33	35	31	53	36	40	33	55
		HIGH	13.0	15	13	62	14.0	20	15	64
			23	25	21	62	25	30	23	64
			35	35	32	62	37	40	34	64

For units with factory installed HACR breaker, the MCA and MOCP values (208/230/3/60 only) are intentionally increased so only one MCA and MOCP can be listed.

Example: A unit without the factory installed HACR breaker has a MCA of 30/33 and MOCP of 30/35 at 208/230V respectively. The values change to 33/33 MCA and 35/35 MOCP for a unit with factory installed HACR breaker. This is to insure maximum protection.

Table 42 – 50LC*004 **MCA/MOCP DETERMINATION WITH POWERED CONVENIENCE OUTLET HACR BREAKER MODEL**

UNIT	NOM. V–Ph–Hz	IFM TYPE	w/ PWRD C.O.							
			NO P.E.				w/ P.E. (pwrd fr/ unit)			
			MCA	HACR BRKR	DISC. SIZE		MCA	HACR BRKR	DISC. SIZE	
					FLA	LRA			FLA	LRA
04	208/ 230–3–60	DD–STD	29.0	40	30	88	31.0	40	32	90
			29/29	40/40	30/30	88/88	31/31	40/40	32/32	90/90
			33/33	40/40	30/30	88/88	35/35	40/40	32/32	90/90
			39/39	40/40	33/36	88/88	42/42	45/45	35/38	90/90
			45/45	45/45	37/41	88/88	47/47	50/50	40/43	90/90
			61/61	70/70	51/56	88/88	64/64	70/70	53/59	90/90
		MED	29/29	40/40	30/29	105	31/31	40/40	32/32	107
			29/29	40/40	30/29	105/105	31/31	40/40	32/32	107/107
			33/33	40/40	30/30	105/105	35/35	40/40	32/32	107/107
			39/39	40/40	33/36	105/105	42/42	45/45	35/38	107/107
			45/45	45/45	37/41	105/105	47/47	50/50	40/43	107/107
			61/61	70/70	51/56	105/105	64/64	70/70	53/58	107/107
		HIGH	30/30	40/40	31/31	109	32/32	40/40	33/33	111
			30/30	40/40	31/31	109/109	32/32	40/40	33/33	111/111
			34/34	40/40	31/31	109/109	36/36	40/40	33/33	111/111
			41/41	45/45	35/37	109/109	43/43	45/45	37/40	111/111
			46/46	50/50	39/42	109/109	49/49	50/50	41/45	111/111
			63/63	70/70	52/58	109/109	65/65	70/70	54/60	111/111
	460–3–60	DD–STD	14.0	20	14	44	15.0	20	16	45
			16	20	14	44	17	20	16	45
			20	20	18	44	21	25	20	45
			24	25	22	44	25	30	23	45
			28	30	26	44	29	30	27	45
		MED	14.0	20	14	52	15.0	20	15	53
			15	20	14	52	17	20	15	53
			20	20	18	52	21	25	19	53
			24	25	22	52	25	25	23	53
			27	30	25	52	29	30	26	53
		HIGH	15.0	20	15	54	16.0	20	16	55
			17	20	15	54	18	20	16	55
			21	25	19	54	22	25	20	55
			25	25	23	54	26	30	24	55
			29	30	26	54	30	30	27	55
	575–3–60	DD–STD	11.0	15	12	32	13.0	15	14	34
			18	20	16	32	20	25	18	34
			23	25	22	32	26	30	24	34
		MED	11.0	15	11	38	13.0	15	14	40
			17	20	16	38	20	20	18	40
			23	25	21	38	25	30	23	40
		HIGH	12.0	15	12	42	14.0	15	14	44
			18	20	17	42	20	25	19	44
			24	25	22	42	26	30	24	44

For units with factory installed HACR breaker, the MCA and MOCP values (208/230/3/60 only) are intentionally increased so only one MCA and MOCP can be listed.
Example: A unit without the factory installed HACR breaker has a MCA of 30/33 and MOCP of 30/35 at 208/230V respectively. The values change to 33/33 MCA and 35/35 MOCP for a unit with factory installed HACR breaker. This is to insure maximum protection.

Table 43 – 50LC*005 **MCA/MOCP DETERMINATION WITH POWERED CONVENIENCE OUTLET HACR BREAKER MODEL**

UNIT	NOM. V–Ph–Hz	IFM TYPE	w/ PWRD C.O.							
			NO P.E.				w/ P.E. (pwrd fr/ unit)			
			MCA	HACR BRKR	DISC. SIZE		MCA	HACR BRKR	DISC. SIZE	
					FLA	LRA			FLA	LRA
05	208/ 230–3–60	DD–STD	33.0	45	34	99	35.0	45	36	101
			35/35	45/45	34/34	99/99	37/37	45/45	36/36	101/101
			41/41	45/45	35/38	99/99	44/44	45/45	37/40	101/101
			63/63	70/70	52/58	99/99	66/66	70/70	55/60	101/101
			78/78	80/80	64/72	99/99	81/81	90/90	67/74	101/101
		MED	32/32	45/45	32/32	115	34/34	45/45	35/34	117
			33/33	45/45	32/32	115/115	35/35	45/45	35/34	117/117
			39/39	45/45	33/36	115/115	42/42	45/45	35/38	117/117
			61/61	70/70	51/56	115/115	64/64	70/70	53/58	117/117
			76/76	80/80	63/70	115/115	79/79	80/80	65/72	117/117
		HIGH	34/34	45/45	36/35	145	36/36	50/50	38/37	147
			35/35	45/45	36/35	145/145	38/38	50/50	38/37	147/147
			42/42	45/45	36/39	145/145	44/44	50/50	38/41	147/147
			64/64	70/70	54/59	145/145	66/66	70/70	56/61	147/147
			79/79	80/80	66/73	145/145	81/81	90/90	68/75	147/147
	460–3–60	DD–STD	16.0	20	16	48	17.0	20	17	49
			17	20	16	48	18	20	17	49
			25	25	23	48	26	30	24	49
			29	30	26	48	30	30	28	49
			42	45	39	48	44	45	40	49
		MED	15.0	20	15	55	16.0	20	16	56
			15	20	15	55	17	20	16	56
			24	25	22	55	25	25	23	56
			27	30	25	55	29	30	26	56
			41	45	38	55	42	45	39	56
		HIGH	15.0	20	16	71	16.0	20	17	72
			17	20	16	71	18	20	17	72
			25	25	23	71	26	30	24	72
			29	30	26	71	30	30	27	72
			42	45	39	71	43	45	40	72
	575–3–60	DD–STD	13.0	15	13	40	15.0	20	16	42
			19	20	17	40	21	25	19	42
			24	25	22	40	27	30	25	42
		MED	12.0	15	12	45	14.0	15	14	47
			17	20	16	45	20	20	18	47
			23	25	21	45	25	30	23	47
		HIGH	13.0	15	14	58	15.0	20	16	60
			19	20	18	58	22	25	20	60
			25	25	23	58	27	30	25	60

For units with factory installed HACR breaker, the MCA and MOCP values (208/230/3/60 only) are intentionally increased so only one MCA and MOCP can be listed.

Example: A unit without the factory installed HACR breaker has a MCA of 30/33 and MOCP of 30/35 at 208/230V respectively. The values change to 33/33 MCA and 35/35 MOCP for a unit with factory installed HACR breaker. This is to insure maximum protection.

Table 44 – 50LC*006 **MCA/MOCP DETERMINATION WITH POWERED CONVENIENCE OUTLET HACR BREAKER MODEL**

UNIT	NOM. V–Ph–Hz	IFM TYPE	w/ PWRD C.O.							
			NO P.E.				w/ P.E. (pwrd fr/ unit)			
			MCA	HACR BRKR	DISC. SIZE		MCA	HACR BRKR	DISC. SIZE	
					FLA	LRA			FLA	LRA
06	208/230–3–60	DD–STD	36.0	50	37	126	38.0	50	39	128
			36/36	50/50	37/37	126/126	38/38	50/50	39/39	128/128
			47/47	50/50	39/43	126/126	49/49	50/50	41/45	128/128
			63/63	70/70	52/58	126/126	66/66	70/70	55/60	128/128
			78/78	80/80	64/72	126/126	81/81	90/90	67/74	128/128
			95/95	100/100	78/87	126/126	97/97	100/100	80/90	128/128
		MED	36/36	50/50	36/36	146	38/38	50/50	39/38	148
			36/36	50/50	36/36	146/146	38/38	50/50	39/38	148/148
			46/46	50/50	39/42	146/146	49/49	50/50	41/45	148/148
			63/63	70/70	52/58	146/146	65/65	70/70	54/60	148/148
			78/78	80/80	64/71	146/146	80/80	90/90	66/74	148/148
			94/94	100/100	77/87	146/146	97/97	100/100	79/89	148/148
		HIGH	37/37	50/50	38/37	172	39/39	50/50	40/39	174
			37/37	50/50	38/37	172/172	39/39	50/50	40/39	174/174
			47/47	50/50	41/44	172/172	50/50	50/50	43/46	174/174
			64/64	70/70	54/59	172/172	66/66	70/70	56/61	174/174
			79/79	80/80	66/73	172/172	81/81	90/90	68/75	174/174
			96/96	100/100	79/88	172/172	98/98	100/100	81/90	174/174
	460–3–60	DD–STD	17.0	20	17	59	18.0	25	19	60
			17	20	17	59	18	25	19	60
			25	25	23	59	26	30	24	60
			29	30	26	59	30	30	28	60
			42	45	39	59	44	45	40	60
			46	50	42	59	47	50	44	60
		MED	17.0	20	17	68	18.0	25	18	69
			17	20	17	68	18	25	18	69
			25	25	23	68	26	30	24	69
			29	30	26	68	30	30	27	69
			42	45	39	68	43	45	40	69
			46	50	42	68	47	50	43	69
		HIGH	17.0	20	17	82	18.0	25	18	83
			17	20	17	82	18	25	18	83
			25	25	23	82	26	30	24	83
			29	30	26	82	30	30	27	83
			42	45	39	82	43	45	40	83
			46	50	42	82	47	50	43	83
	575–3–60	DD–STD	14.0	20	14	46	16.0	20	16	48
			24	25	22	46	27	30	25	48
			36	40	33	46	38	40	35	48
		MED	13.0	15	14	55	15.0	20	16	57
			24	25	22	55	26	30	24	57
			35	40	33	55	38	40	35	57
		HIGH	14.0	20	15	64	16.0	20	17	66
			25	25	23	64	27	30	25	66
			37	40	34	64	39	40	36	66

For units with factory installed HACR breaker, the MCA and MOCP values (208/230/3/60 only) are intentionally increased so only one MCA and MOCP can be listed.

Example: A unit without the factory installed HACR breaker has a MCA of 30/33 and MOCP of 30/35 at 208/230V respectively. The values change to 33/33 MCA and 35/35 MOCP for a unit with factory installed HACR breaker. This is to insure maximum protection.

SEQUENCE OF OPERATION

General

The sequence below describes the sequence of operation for an electromechanical unit with and without a factory installed EconoMi$er X (called "economizer" in this sequence).

Electromechanical units with no economizer

Cooling

When the thermostat calls for cooling, terminals G and Y1 are energized. As a result, the indoor-fan contactor (IFC) and the compressor contactor (C1) are energized, causing the indoor fan motor (IFM) Low speed, compressor first stage cooling, and outdoor fan to start. All 50LC units have 2 stages of cooling, if required the thermostat will additionally energize Y2. The Y2 signal will energize compressor contactor #2 (C2), causing compressor second stage to start, and IFM to shift to High speed. Regardless of the number of stages, the outdoor-fan motor runs continuously while unit is cooling.

Heating

When the thermostat calls for heating, power is sent to W on the unit control board to activate the electric heater.

If a two stage electric heat model and additional heat is required, W2 is activated for full electric heat operation.

With any heating stages the fan will run high fan speed.

Ventilation

50LC electromechanical unit's indoor fans have two speeds. Low Speed and High Speed are the standard unit speeds. The Low Speed will operate during ventilation operation.

Electromechanical units with an economizer

Cooling

When free cooling is not available, the compressors will be controlled by the zone thermostat. When free cooling is available, the outdoor-air damper is modulated by the EconoMi$er X control to provide a 50°F (10°C) to 55°F (13°C) mixed-air temperature into the zone. As the mixed air temperature fluctuates above 55°F (13°C) or below 50°F (10°C) dampers will be modulated (open or close) to bring the mixed-air temperature back within control. If mechanical cooling is utilized with free cooling, the outdoor-air damper will maintain its current position at the time the compressor is started. If the increase in cooling capacity causes the mixed-air temperature to drop below 45°F (7°C), then the outdoor-air damper position will be decreased to the minimum position. If the mixed-air temperature continues to fall, the outdoor-air damper will close. Control returns to normal once the mixed-air temperature rises above 48°F (9°C). The power exhaust fans will be energized and de-energized, if installed, as the outdoor-air damper opens and closes.

If field-installed accessory CO2 sensors are connected to the EconoMi$er X control, a demand controlled ventilation strategy will begin to operate. As the CO2 level in the zone increases above the CO2 setpoint, the minimum position of the damper will be increased proportionally. As the CO2 level decreases because of the increase in fresh air, the outdoor-air damper will be proportionally closed. For EconoMi$er X operation, there must be a thermostat call for the fan (G). If the unit is occupied and the fan is on, the damper will operate at minimum position. Otherwise, the damper will be closed.

When the EconoMi$er X control is in the occupied mode and a call for cooling exists (Y1 on the thermostat), the control will first check for indoor fan operation. If the fan is not on, then cooling will not be activated. If the fan is on, then the control will open the EconoMi$er X damper to the minimum position.

On the initial power to the EconoMi$er X control, it will take the damper up to 2 1/2 minutes before it begins to position itself. After the initial power-up, further changes in damper position can take up to 30 seconds to initiate. Damper movement from full closed to full open (or vice versa) will take between 1 1/2 and 2 1/2 minutes. If free cooling can be used as determined from the appropriate changeover command (switch, dry bulb, enthalpy curve, differential dry bulb, or differential enthalpy), then the control will modulate the dampers open to maintain the mixed-air temperature setpoint at 50°F (10°C) to 55°F (13°C). If there is a further demand for cooling (cooling second stage - Y2 is energized), then the control will bring on compressor stage 1 to maintain the mixed-air temperature setpoint. The EconoMi$er X damper will be open at maximum position. EconoMi$er X operation is limited to compressor stage 1.

Heating

The sequence of operation for the heating is the same as an electromechanical unit with no economizer. The only difference is how the economizer acts. The economizer will stay at the Economizer Minimum Position while the evaporator fan is operating. The outdoor-air damper is closed when the indoor fan is not operating.

Advance Operation with ComfortLink Controls

General

The sequence below appends the sequence of operation for an electromechanical unit with and without a factory installed EconoMi$er. For detailed information regarding direct digital controller operation, see the start-up, operations, and troubleshooting manual.

WeatherExpert (50LC) units ComfortLink controls have multiple fan speeds. Direct drive units have two speeds with an optional third speed. If configured the third speed is used during ventilation operation.

Belt drive VFD units have 5 speeds that the indoor fan will run at based on the running mode and conditioning demand. The 5 speeds are Supply Fan Maximum Speed (100% of balanced airflow), Supply Fan Speed 1, 2, 3, and Supply Fan Speed Ventilation. Supply Fan Speed 2 is pre set to the optimum energy efficiency part load speed. Fan Speed 1 and 3 are pre-set to transition the fan during cooling stage up, and to aid in dehumidification. These 2 speeds can be adjusted in the field to optimize dehumidification, load balancing, or efficiency.

Cooling

In general, the unit enters a cooling mode based on a demand, decides how to satisfy the demand, executes its plan, and then leaves the cooling mode. ComfortLink controls can support a thermostat, space sensor, or building control, the unit operation is generally the same for each.

Cooling staging control and compressor control work hand in hand to determine what the demand is, what is available, and how to satisfy the demand.

On direct drive fan units the fan will follow simple control. With one stage of cooling running, the fan will run the low fan speed. With 2 stages of cooling running, the fan will run high fan speed. On belt drive VFD fan units the fan will be controlled as described below.

The indoor fan speed will change throughout cooling operation based on cooling demand, run time, supply air temperature, and refrigerant suction temperature. With only one stage of cooling running the fan will run at Supply Fan Speed 1 and then Supply Fan Speed 2. With 2 stages of cooling running the fan will run at Supply Fan Speed 3 and then Supply Fan Maximum Speed. The fan will wait 8 minutes between fan speeds 1 and 2 or 3 and max, unless the supply air overrides it. The supply air temperature (SAT) can override the 8 minute timer if it falls below the Minimum Supply Air Temperature or if its trend anticipates a need for more air to maximize occupant comfort.

Indoor fan speed control and compressor control will work in tandem to maintain unit operation with regard to low refrigerant suction temperature in conditions where cooling is demanded and there is low load.

Dehumidification Control

Optional dehumidification operation can be achieved through installation and configuration of either a space relative humidity sensor or a relative humidity switch input.

NOTE: Use of a humidity sensor requires an economizer control board; alternately a humidistat can be used with a field installed relay.

There are three types of dehumidification control set by through unit configuration: no dehumidification control, maximum dehumidification control, or maximum comfort dehumidification control.

NOTE: When there is a dehumidification demand, the economizer damper position is limited to its minimum damper position.

Max Dehumidification

When the Dehumidification Control Type set to Maximum Dehumidification Control the control will try to satisfy the dehumidification demand by providing the maximum compression stage allowable and the minimum fan speed available while maintain saturated suction temperature to provide continuous operation.

Max Comfort Dehumidification

When the Dehumidification Control Type set to Maximum Comfort, the control will try to satisfy the demand while minimizing the cold air dump. The fan staging and compressor staging will operate similar to Maximum Dehumidification but the supply fan speed will be increased as necessary to additionally prevent Supply Air Temperature (SAT) from decreasing below Minimum Supply Air Temperature.

Free Cooling Operation with an Economizer

Direct Drive Units

During free cooling the fan will run at Low Speed. After the economizer reaches 100% (or Max) for 5 minutes, the fan will be changed to High Speed. The fan will drop back to low speed if the damper position falls below 75%. The compressor will be allowed for use after the fan and economizer are 100% (or Max) for 5 minutes. Once compression is turned on the economizer and fan will remain at 100% until the call for cooling is removed.

Belt Drive VFD Units

During free cooling the fan will start at Speed 1. After the economizer reaches 100% (or Max) for 1 minute, the fan will be changed to Speed 2. If the damper remains at 100% the speed will increase every minute until maximum speed. If the damper starts to close the current running fan speed will be locked in until cooling call is removed. The compressor will be allowed for use after the fan and economizer are 100% (or Max) for 5 minutes. Once compression is turned on the economizer and fan will remain at 100% until the call for cooling is removed.

Heating

The heating sequence of operation is generally the same as the sequence for an electromechanical unit.

GUIDE SPECIFICATIONS - 50LC*004-06

Note about this specification:

This specification is in the “Masterformat” as published by the Construction Specification Institute. Please feel free to copy this specification directly into your building spec.

Cooling Only/Electric Heat Packaged Rooftop

HVAC Guide Specifications

Size Range: **3 to 5 Nominal Tons**

Section	Description
23 06 80	**Schedules for Decentralized HVAC Equipment**
23 06 80.13	Decentralized Unitary HVAC Equipment Schedule
23 06 80.13.A.	Rooftop unit schedule

1. Schedule is per the project specification requirements.

23 07 16 HVAC Equipment Insulation

23 07 16.13 Decentralized, Rooftop Units:

23 07 16.13.A. Evaporator fan compartment:

1. Interior cabinet surfaces shall be insulated with a minimum 1/2-in. thick, minimum 1 1/2 lb density, flexible fiberglass insulation bonded with a phenolic binder, neoprene coated on the air side.
2. Insulation and adhesive shall meet NFPA 90A requirements for flame spread and smoke generation.

23 07 16.13.B. Electric heat compartment:

1. Aluminum foil-faced fiberglass insulation shall be used.
2. Insulation and adhesive shall meet NFPA 90A requirements for flame spread and smoke generation.

23 09 13 Instrumentation and Control Devices for HVAC

23 09 13.23 Sensors and Transmitters

23 09 13.23.A. Thermostats

1. Thermostat must
   a. energize both “W” and “G” when calling for heat.
   b. have capability to energize 2 different stages of cooling, and 2 different stages of heating.
   c. include capability for occupancy scheduling.

23 09 23 Direct-digital Control system for HVAC

23 09 23.13 Decentralized, Rooftop Units:

23 09 23.13.A. ComfortLink Unit Controls shall contain:

1. Four button detailed English scrolling marquee display.
2. CCN (Carrier Comfort Network) capable.
3. Unit control with standard suction pressure transducers and condensing temperature thermistors.
4. Shall provide a 5°F temperature difference between cooling and heating set points to meet ASHRAE 90.1 Energy Standard.
5. Shall provide and display a current alarm list and an alarm history list.
6. Service run test capability.
7. Shall accept input from a CO_2 sensor (both indoor and outdoor).
8. Configurable alarm light shall be provided which activates when certain types of alarms occur.
9. Compressor minimum run time (3 minutes) and minimum off time (5 minutes) are provided.
10. Service diagnostic mode.

11. Economizer control (optional).
12. Control multi capacity stages
13. Unit shall be complete with self-contained low voltage control circuit.
14. Unit shall have 0°F low ambient cooling operation.

23 09 23.13.B. Safeties:

1. Unit shall incorporate a solid state compressor lockout that provides optional reset capability at the space thermostat, should any of the following safety devices trip and shut off compressor:
   a. Compressor lockout protection provided for either internal or external overload.
   b. Low pressure protection.
   c. Freeze protection (evaporator coil).
   d. High pressure protection (high pressure switch or internal).
   e. Compressor reverse rotation protection
   f. Loss of charge protection.
   g. Supply air sensor shall be located in the unit and detect both heating and cooling operation

23 09 23.13.B. RTU Open - multi-protocol, direct digital controller:

1. Shall be ASHRAE 62-2001 compliant.
2. Shall accept 18-30VAC, 50-60Hz, and consumer 15VA or less power.
3. Shall have an operating temperature range from -40°F (-40°C) to 130°F (54°C), 10% - 90% RH (non-condensing).
4. Shall include built-in protocol for BACNET (MS/TP and PTP modes), Modbus (RTU and ASCII), Johnson N2 and LonWorks. LonWorks Echelon processor required for all Lon applications shall be contained in separate communication board.
5. Shall allow access of up to 62 network variables (SNVT). Shall be compatible with all open controllers
6. Baud rate Controller shall be selectable using a dipswitch.
7. Shall have an LED display independently showing the status of serial communication, running, errors, power, all digital outputs, and all analog inputs.
8. Shall accept the following inputs: space temperature, setpoint adjustment, outdoor air temperature, indoor air quality, outdoor air quality, compressor lock-out, fire shutdown, enthalpy switch, and fan status/filter status/ humidity/ remote occupancy.
9. Shall provide the following outputs: economizer, fan, cooling stage 1, cooling stage 2, heat stage 1, heat stage 2, heat stage 3/ exhaust/ reversing valve.
10. Shall have built-in surge protection circuitry through solid state polyswitches. Polyswitches shall be used on incoming power and network connections. Polyswitches will return to normal when the “trip” condition clears.
11. Shall have a battery back-up capable of a minimum of 10,000 hours of data and time clock retention during power outages.
12. Shall have built-in support for Carrier technician tool.
13. Shall include an EIA-485 protocol communication port, an access port for connection of either a computer or a Carrier technician tool, an EIA-485 port for network communication to intelligent space sensors and displays, and a port to connect an optional LonWorks communications card.
14. Software upgrades will be accomplished by either local or remote download. No software upgrades through chip replacements are allowed.

23 09 33 Electric and Electronic Control System for HVAC

23 09 33.13 Decentralized, Rooftop Units:

23 09 33.13.A. General:

1. Shall be complete with self-contained low-voltage control circuit protected by a resettable circuit breaker on the 24-v transformer side. Transformer shall have 75VA capability.
2. Shall utilize color-coded wiring.
3. Shall include a central control terminal board to conveniently and safely provide connection points for vital control functions such as: smoke detectors, phase monitor, economizer, thermostat, DDC control options, and low and high pressure switches.
4. Unit shall include a minimum of one 8-pin screw terminal connection board for connection of control wiring.

23 09 33.23.B. Safeties:

1. Compressor over-temperature, over current.

2. Low-pressure switch.
   a. Units with 2 compressors shall have different sized connectors for the circuit 1 and circuit 2 low and high pressure switches. They shall physically prevent the cross-wiring of the safety switches between circuits.
   b. Low pressure switch shall use different color wire than the high pressure switch. The purpose is to assist the installer and service technician to correctly wire and or troubleshoot the rooftop unit.
3. High-pressure switch.
   a. Units with 2 compressors shall have different sized connectors for the circuit 1 and circuit 2 low and high pressure switches. They shall physically prevent the cross-wiring of the safety switches between circuits 1 and 2.
   b. High pressure switch shall use different color wire than the low pressure switch. The purpose is to assist the installer and service technician to correctly wire and or troubleshoot the rooftop unit.
4. Automatic reset, motor thermal overload protector.

23 09 93 Sequence of Operations for HVAC Controls

23 09 93.13 Decentralized, Rooftop Units:

23 09 93.13 INSERT SEQUENCE OF OPERATION

23 40 13 Panel Air Filters

23 40 13.13 Decentralized, Rooftop Units:

23 40 13.13.A. Standard filter section

1. Shall consist of factory-installed, low velocity, throwaway 2-in. thick fiberglass filters of commercially available sizes.
2. Unit shall use only one filter size. Multiple sizes are not acceptable.
3. Filters shall be accessible through an access panel with “no-tool” removal as described in the unit cabinet section of this specification (23 81 19.13.H).

23 81 19 Self-Contained Air Conditioners

23 81 19.13 Small-Capacity Self-Contained Air Conditioners (50LC*004-06)

23 81 19.13.A. General

1. Outdoor, rooftop mounted, electrically controlled, heating and cooling unit utilizing a two stage fully hermetic scroll compressor for cooling duty and gas combustion for heating duty.
2. Factory assembled, single-piece heating and cooling rooftop unit. Contained within the unit enclosure shall be all factory wiring, piping, controls, and special features required prior to field start-up.
3. Unit shall use environmentally safe, Puron® refrigerant.
4. Unit shall be installed in accordance with the manufacturer’s instructions.
5. Unit must be selected and installed in compliance with local, state, and federal codes.

23 81 19.13.B. Quality Assurance

1. Unit meets ASHRAE 90.1 minimum efficiency requirements.
2. Units shall be Energy Star qualified.
3. Unit shall be rated in accordance with AHRI Standards 210/240.
4. Unit shall be designed to conform to ASHRAE 15, 2001.
5. Unit shall be UL-tested and certified in accordance with ANSI Z21.47 Standards and UL-listed and certified under Canadian standards as a total package for safety requirements.
6. Insulation and adhesive shall meet NFPA 90A requirements for flame spread and smoke generation.
7. Unit casing shall be capable of withstanding 500-hour salt spray exposure per ASTM B117 (scribed specimen).
8. Unit casing shall be capable of withstanding Federal Test Method Standard No. 141 (Method 6061) 5000-hour salt spray.
9. Unit shall be designed in accordance with ISO 9001, and shall be manufactured in a facility registered by ISO 9001.
10. Roof curb shall be designed to conform to NRCA Standards.
11. Unit shall be subjected to a completely automated run test on the assembly line. The data for each unit will be stored at the factory, and must be available upon request.
12. Unit shall be designed in accordance with UL Standard 1995, including tested to withstand rain.
13. Unit shall be constructed to prevent intrusion of snow and tested to prevent snow intrusion into the control box up to 40 mph.
14. Unit shake tested to assurance level 1, ASTM D4169 to ensure shipping reliability.

23 81 19.13.C. Delivery, Storage, and Handling

1. Unit shall be stored and handled per manufacturer's recommendations.
2. Lifted by crane requires either shipping top panel or spreader bars.
3. Unit shall only be stored or positioned in the upright position.

23 81 19.13.D. Project Conditions

1. As specified in the contract.

23 81 19.13.E. Project Conditions

1. As specified in the contract.

23 81 19.13.F. Operating Characteristics

1. Unit shall be capable of starting and running at 125°F (52°C) ambient outdoor temperature, meeting maximum load criteria of AHRI Standard 210/240 at ± 10% voltage.
2. Compressor with standard controls electrical mechanical shall be capable of operation down to 10°F (-12°C), ambient outdoor temperatures. Units with ComfortLink controls shall be available if operation below 0°F (-18°C), is required.
3. Unit shall discharge supply air vertically or horizontally as shown on contract drawings.
4. Unit shall be factory configured for vertical supply & return configurations.
5. Unit shall be field convertible from vertical to horizontal airflow on all models. No special kit required.
6. Unit shall be capable of mixed operation: vertical supply with horizontal return or horizontal supply with vertical return.

23 81 19.13.G. Electrical Requirements

1. Main power supply voltage, phase, and frequency must match those required by the manufacturer.

23 81 19.13.H. Unit Cabinet

1. Unit cabinet shall be constructed of galvanized steel, and shall be bonderized and coated with a pre-painted baked enamel finish on all externally exposed surfaces.
2. Unit cabinet exterior paint shall be: film thickness, (dry) 0.003 inches minimum, gloss (per ASTM D523, 60°F): 60, Hardness: H-2H Pencil hardness.
3. Evaporator fan compartment interior cabinet insulation shall conform to AHRI Standards 210/240 or 340/360 minimum exterior sweat criteria. Interior surfaces shall be insulated with a minimum 1/2-in. thick, 1 lb density, flexible aluminum foil faced insulation on all interior air stream panels.
4. Base of unit shall have a minimum of four locations for thru-the-base gas and electrical connections (factory installed or field installed), standard.
5. Base Rail
   a. Unit shall have base rails on a minimum of 2 sides.
   b. Holes shall be provided in the base rails for rigging shackles to facilitate maneuvering and overhead rigging.
   c. Holes shall be provided in the base rail for moving the rooftop by fork truck.
   d. Base rail shall be a minimum of 16 gauge thickness.
6. Condensate pan and connections:
   a. Shall be an internally sloped condensate drain pan made of a non-corrosive material.
   b. Shall comply with ASHRAE Standard 62.
   c. Shall use a 3/4-in. -14 NPT drain connection, possible either through the bottom or end of the drain pan. Connection shall be made per manufacturer's recommendations.
7. Top panel:
   a. Shall be a single piece top panel on all models.
8. Electrical Connections
   a. All unit power wiring shall enter unit cabinet at a single, factory-prepared, knockout location.
   b. Thru-the-base capability
      (1.) Standard unit shall have a thru-the-base electrical location(s) using a raised, embossed portion of the unit basepan.
      (2.) Optional, factory-approved, water-tight connection method must be used for thru-the-base electrical connections.
      (3.) No basepan penetration, other than those authorized by the manufacturer, is permitted.
9. Component access panels (standard)
   a. Cabinet panels shall be easily removable for servicing.
   b. Unit shall have one factory installed, tool-less, removable, filter access panel.

c. Panels covering control box, indoor fan, indoor fan motor, gas components (where applicable), and compressors shall have molded composite handles.
d. Handles shall be UV modified, composite, permanently attached, and recessed into the panel.
e. Screws on the vertical portion of all removable access panel shall engage into heat resistant, molded composite collars.
f. Collars shall be removable and easily replaceable using manufacturer recommended parts.

23 81 19.13.I. N/A

23 81 19.13.J. Coils

1. Standard Aluminum Fin/Copper Tube Coils:
   a. Standard evaporator and condenser coils shall have aluminum lanced plate fins mechanically bonded to seamless internally grooved copper tubes with all joints brazed.
   b. Evaporator coils shall be leak tested to 150 psig, pressure tested to 450 psig, and qualified to UL 1995 burst test at 1775 psig.
   c. Condenser coils shall be leak tested to 150 psig, pressure tested to 650 psig, and qualified to UL 1995 burst test at 1980 psig.
2. Optional Pre-coated aluminum-fin condenser coils:
   a. Shall have a durable epoxy-phenolic coating to provide protection in mildly corrosive coastal environments.
   b. Coating shall be applied to the aluminum fin stock prior to the fin stamping process to create an inert barrier between the aluminum fin and copper tube.
   c. Epoxy-phenolic barrier shall minimize galvanic action between dissimilar metals.
3. Optional Copper-fin evaporator and condenser coils):
   a. Shall be constructed of copper fins mechanically bonded to copper tubes and copper tube sheets.
   b. Galvanized steel tube sheets shall not be acceptable.
   c. A polymer strip shall prevent coil assembly from contacting the sheet metal coil pan to minimize potential for galvanic corrosion between coil and pan.
4. Optional E-coated aluminum-fin evaporator and condenser coils:
   a. Shall have a flexible epoxy polymer coating uniformly applied to all coil surface areas without material bridging between fins.
   b. Coating process shall ensure complete coil encapsulation of tubes, fins and headers.
   c. Color shall be high gloss black with gloss per ASTM D523-89.
   d. Uniform dry film thickness from 0.8 to 1.2 mil on all surface areas including fin edges.
   e. Superior hardness characteristics of 2H per ASTM D3363-92A and cross-hatch adhesion of 4B-5B per ASTM D3359-93.
   f. Impact resistance shall be up to 160 in.-lb (ASTM D2794-93).
   g. Humidity and water immersion resistance shall be up to minimum 1000 and 250 hours respectively (ASTM D2247-92 and ASTM D870-92).
   h. Corrosion durability shall be confirmed through testing to be no less than 1000 hours salt spray per ASTM B117-90.
5. Optional E-coated aluminum-fin, aluminum tube condenser coils:
   a. Shall have a flexible epoxy polymer coating uniformly applied to all coil external surface areas without material bridging between fins or louvers.
   b. Coating process shall ensure complete coil encapsulation, including all exposed fin edges.
   c. E-coat thickness of 0.8 to 1.2 mil with top coat having a uniform dry film thickness from 1.0 to 2.0 mil on all external coil surface areas, including fin edges, shall be provided.
   d. Shall have superior hardness characteristics of 2H per ASTM D3363-00 and cross-hatch adhesion of 4B-5B per ASTM D3359-02.
   e. Shall have superior impact resistance with no cracking, chipping or peeling per NSF/ANSI 51-2002 Method 10.2.

23 81 19.13.K. Refrigerant Components

1. Refrigerant circuit shall include the following control, safety, and maintenance features:
   a. Thermostatic Expansion Valve (TXV) shall help provide optimum performance across the entire operating range. Shall contain removable power element to allow change out of power element and bulb without removing the valve body.
   b. Refrigerant filter drier.
   c. Service gauge connections on suction and discharge lines.

d. Pressure gauge access through a specially designed access port in the top panel of the unit.

2. There shall be gauge line access port in the skin of the rooftop, covered by a black, removable plug.
   a. The plug shall be easy to remove and replace.
   b. When the plug is removed, the gauge access port shall enable maintenance personnel to route their pressure gauge lines.
   c. This gauge access port shall facilitate correct and accurate condenser pressure readings by enabling the reading with the compressor access panel on.
   d. The plug shall be made of a leak proof, UV-resistant, composite material.
3. Compressors
   a. Unit shall use one fully hermetic, scroll compressor for each independent refrigeration circuit.
   b. Models shall be available with two stage capacity control.
   c. Compressor motors shall be cooled by refrigerant gas passing through motor windings.
   d. Compressors shall be internally protected from high discharge temperature conditions.
   e. Compressors shall be protected from an over-temperature and over-amperage conditions by an internal, motor overload device.
   f. Compressor shall be factory mounted on rubber grommets.
   g. Compressor motors shall have internal line break thermal, current overload and high pressure differential protection.
   h. Crankcase heaters shall be standard on each compressor.

23 81 19.13.L. Filter Section

1. Filters access is specified in the unit cabinet section of this specification.
2. Filters shall be held in place by a pivoting filter tray, facilitating easy removal and installation.
3. Shall consist of factory-installed, low velocity, throw-away 2-in. thick fiberglass filters.
4. Filters shall be standard, commercially available sizes.
5. Only one size filter per unit is allowed.

23 81 19.13.M. Evaporator Fan and Motor

1. Evaporator fan motor:
   a. Shall have permanently lubricated bearings.
   b. Shall have inherent automatic-reset thermal overload protection or circuit breaker.
   c. Shall have a maximum continuous bhp rating for continuous duty operation; no safety factors above that rating shall be required.
2. ECM Direct Drive (Multi-Speed) Evaporator Fan Motor:
   a. Multi speed motor with easy quick adjustment settings.
   b. Blower fan shall be double-inlet type with forward-curved blades.
   c. Shall be constructed from steel with a corrosion resistant finish and dynamically balanced.
   d. Standard on all models.
3. Optional Belt-driven Evaporator Fan with VFD controller and display:
   a. Belt drive shall include an adjustable-pitch motor pulley.
   b. Shall use sealed, permanently lubricated ball-bearing type.
   c. Blower fan shall be double-inlet type with forward-curved blades.
   d. Shall be constructed from steel with a corrosion resistant finish and dynamically balanced.
   e. Shall come with factory installed Variable Frequency Drive (VFD):
      (1.) Shall be installed inside the unit cabinet, mounted, wired and tested
      (2.) Shall contain Electromagnetic Interference (EMI) suppression (also called radio frequency interference or RFI) that may interrupt, obstruct, or otherwise degrade the effective performance of the internal circuit.
      (3.) Insulated Gate Bi-Polar Transistors (IGBT) used to produce the output pulse width modulated (PWM) waveform, allowing for quiet motor operation.
      (4.) Be self diagnostics
      (5.) RS485 capability standard.
      (6.) Electronic thermal overload protection.
      (7.) 5% swinging chokes for harmonic reduction and improved power factor.
      (8.) All printed circuit boards shall be conformal coated

23 81 19.13.N. Condenser Fans and Motors

1. Condenser fan motors:
   a. Shall be a totally enclosed motor.
   b. Shall use permanently lubricated bearings.
   c. Shall have inherent thermal overload protection with an automatic reset feature.
   d. Shall use a shaft-down design.
   e. Shall be ECM design.
2. Condenser Fans:
   a. Shall be a direct-driven propeller type fan.
   b. Shall have aluminum blades riveted to corrosion-resistant steel spiders and shall be dynamically balanced.

23 81 19.13.O. Special Features, Options and Accessories

1. Standard Integrated Economizers
   a. Integrated, gear driven parallel modulating blade design type capable of simultaneous economizer and compressor operation.
   b. Independent modules for vertical or horizontal return configurations shall be available. Vertical return modules shall be available as a factory-installed option.
   c. Damper blades shall be galvanized steel with composite gears. Plastic or composite blades on intake or return shall not be acceptable.
   d. Shall include all hardware and controls to provide free cooling with outdoor air when temperature and/or humidity are below setpoints.
   e. Shall be equipped with gear driven dampers for both the outdoor ventilation air and the return air for positive air stream control.
   f. Standard models shall be equipped with low-leakage dampers, not to exceed 2% leakage at 1 in. wg pressure differential. Economizer controller on electromechanical units shall be Honeywell W7212 that provides:
      (1.) Combined minimum and DCV maximum damper position potentiometers with compressor staging relay.
      (2.) Functions with solid state analog enthalpy or dry bulb changeover control sensing.
      (3.) Contain LED indicates for:
      When free cooling is available
      When module is in DCV mode
      When exhaust fan contact is closed
   g. Ultra low leak EconoMi$er X system shall be available on models with 2-speed Variable Frequency Drive (VFD) systems. Only available on 2-speed indoor fan motor systems with electromechanical controls, RTU Open and ComfortLink.
      (1.) Maximum damper leakage rate to be equal to or less than 4.0 cfm/sq. ft. at 1.0 in. w.g., meeting or exceeding ASHRAE 90.1 requirements. Economizer controller on electromechanical units shall be Honeywell W7220 that provides:
      (2.) 2-line LCD interface screen for setup, configuration and troubleshooting
      (3.) On-board fault detection and diagnostics
      (4.) Sensor failure loss of communication identification
      (5.) Automatic sensor detection
      (6.) Capabilities for use with multiple-speed indoor fan systems
      (7.) Utilize digital sensors: Dry bulb and Enthalpy
   h. Shall be capable of introducing up to 100% outdoor air.
   i. Shall be equipped with a barometric relief damper capable of relieving up to 100% return air.
   j. Shall be designed to close damper(s) during loss-of-power situations with spring return built into motor.
   k. Dry bulb outdoor air temperature sensor shall be provided as standard. Outdoor air sensor setpoint shall be adjustable and shall range from 40 to 100°F / 4 to 38°C. Additional sensor options shall be available as accessories.
   l. The economizer controller shall also provide control of an accessory power exhaust unit function. Factory set at 100%, with a range of 0% to 100%.
   m. The economizer shall maintain minimum airflow into the building during occupied period and provide design ventilation rate for full occupancy. A remote potentiometer may be used to override the damper setpoint.
   n. Dampers shall be completely closed when the unit is in the unoccupied mode.

o. Economizer controller shall accept a 2-10 Vdc CO_2 sensor input for IAQ/DCV control. In this mode, dampers shall modulate the outdoor air damper to provide ventilation based on the sensor input.
p. Compressor lockout sensor shall open at 35°F (2°C) and close closes at 50°F (10°C).
q. Actuator shall be direct coupled to economizer gear. No linkage arms or control rods shall be acceptable.
r. Economizer controller shall provide indications when in free cooling mode, in the DCV mode, or the exhaust fan contact is closed.

2. Condenser Coil Hail Guard Assembly (Factory installed option on 3 phase models. Field installed on all 3 and 1 phase models)
   a. Shall protect against damage from hail.
   b. Shall be louvered design.
3. Unit-Mounted, Non-Fused Disconnect Switch:
   a. Switch shall be factory-installed, internally mounted.
   b. National Electric Code (NEC) and UL approved non-fused switch shall provide unit power shutoff.
   c. Shall be accessible from outside the unit
   d. Shall provide local shutdown and lockout capability.
4. Convenience Outlet:
   a. Powered convenience outlet (not available on 575 volt models).
      (1.) Outlet shall be powered from main line power to the rooftop unit.
      (2.) Outlet shall be powered from line side or load side of disconnect by installing contractor, as required by code. If outlet is powered from load side of disconnect, unit electrical ratings shall be UL certified and rated for additional outlet amperage.
      (3.) Outlet shall be factory-installed and internally mounted with easily accessible 115-v female receptacle.
      (4.) Outlet shall include 15 amp GFI receptacles with independent fuse protection.
      (5.) Voltage required to operate convenience outlet shall be provided by a factory-installed step-down transformer.
      (6.) Outlet shall be accessible from outside the unit.
      (7.) Outlet shall include a field-installed “Wet in Use” cover.
   b. Non-Powered convenience outlet.
      (1.) Outlet shall be powered from a separate 115/120v power source.
      (2.) A transformer shall not be included.
      (3.) Outlet shall be factory-installed and internally mounted with easily accessible 115-v female receptacle.
      (4.) Outlet shall include 15 amp GFI receptacles with independent fuse protection.
      (5.) Outlet shall be accessible from outside the unit.
      (6.) Outlet shall include a field-installed “Wet in Use” cover.
5. Thru-the-Base Connectors:
   a. Kits shall provide connectors to permit electrical connections to be brought to the unit through the unit basepan.
   b. Minimum of four connection locations per unit.
6. Propeller Power Exhaust:
   a. Power exhaust shall be used in conjunction with an integrated economizer.
   b. Independent modules for vertical or horizontal return configurations shall be available.
   c. Horizontal power exhaust is shall be mounted in return ductwork.
   d. Power exhaust shall be controlled by economizer controller operation. Exhaust fans shall be energized when dampers open past the 0-100% adjustable setpoint on the economizer control.
7. Roof Curbs (Vertical):
   a. Full perimeter roof curb with exhaust capability providing separate air streams for energy recovery from the exhaust air without supply air contamination.
   b. Formed galvanized steel with wood nailer strip and shall be capable of supporting entire unit weight.
   c. Permits installation and securing of ductwork to curb prior to mounting unit on the curb.
8. High-Static Indoor Fan Motor(s) and Drive(s):
   a. High-static motor(s) and drive(s) shall be factory-installed to provide additional performance range.
9. Condenser Coil Grille:
   a. Shall protect against damage from hail.

b. Shall be of louvered style.

10. Thru-the-Bottom Utility Connectors:
    a. Kit shall provide connectors to permit gas and electrical connections to be brought to the unit through the basepan.
11. Outdoor Air Enthalpy Sensor:
    a. The outdoor air enthalpy sensor shall be used to provide single enthalpy control. When used in conjunction with a return air enthalpy sensor, the unit will provide differential enthalpy control. The sensor allows the unit to determine if outside air is suitable for free cooling.
12. Return Air Enthalpy Sensor:
    a. The return air enthalpy sensor shall be used in conjunction with an outdoor air enthalpy sensor to provide differential enthalpy control.
13. Indoor Air Quality (CO_2) Sensor:
    a. Shall be able to provide demand ventilation indoor air quality (IAQ) control.
    b. The IAQ sensor shall be available in duct mount, wall mount, or wall mount with LED display. The set-point shall have adjustment capability.
14. Smoke detectors (factory-installed only):
    a. Shall be a Four-Wire Controller and Detector.
    b. Shall be environmental compensated with differential sensing for reliable, stable, and drift-free sensitivity.
    c. Shall use magnet-activated test/reset sensor switches.
    d. Shall have tool-less connection terminal access.
    e. Shall have a recessed momentary switch for testing and resetting the detector.
    f. Controller shall include:
        (1.) One set of normally open alarm initiation contacts for connection to an initiating device circuit on a fire alarm control panel.
        (2.) Two Form-C auxiliary alarm relays for interface with rooftop unit or other equipment.
        (3.) One Form-C supervision (trouble) relay to control the operation of the Trouble LED on a remote test/reset station.
        (4.) Capable of direct connection to two individual detector modules.
        (5.) Can be wired to up to 14 other duct smoke detectors for multiple fan shutdown applications.
15. Time Guard
    a. Shall prevent compressor short cycling by providing a 5-minute delay (±2 minutes) before restarting a compressor after shutdown for any reason.
    b. One device shall be required per compressor.
16. Electric Heat:
    a. Heating Section
        (1.) Heater element open coil resistance wire, nickel-chrome alloy, 0.29 inches inside diameter, strung through ceramic insulators mounted on metal frame. Coil ends are staked and welded to terminal screw slots.
        (2.) Heater assemblies are provided with integral fusing for protection of internal heater circuits not exceeding 48 amps each. Auto reset thermo limit controls, magnetic heater contactors (24 v coil) and terminal block all mounted in electric heater control box (minimum 18 ga galvanized steel) attached to end of heater assembly.
17. Hinged access panels:
    a. Shall provide easy access through integrated quarter turn latches and lift tabs.
    b. Shall be on major panels of; filter, control box, fan motor and compressor.

Copyright 2012 Carrier Corp. • 7310 W. Morris St. • Indianapolis, IN 46231 Printed in U.S.A. Edition Date: 04/12 **Catalog No: 50LC−01PD**

Manufacturer reserves the right to change, at any time, specifications and designs without notice and without obligations. Replaces: NEW