58MCB
4−WAY MULTIPOISE FIXED−CAPACITY CONDENSING GAS FURNACE
Input Rates: 40,000 thru 138,000 Btuh

Carrier
turn to the experts

Product Data

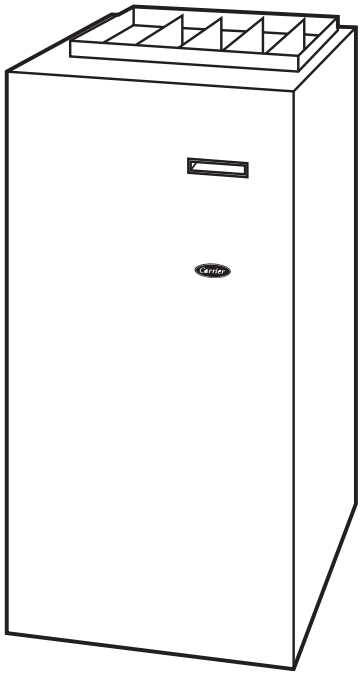

A05104

HIGH EFFICIENCY AND FLEXIBILITY DESIGNED TO MEET THE NEEDS OF NEW HOMES

The model 58MCB combines high efficiency with flexibility to meet the changing needs of new home construction. The unique 4-way, multipoise design of the 58MCB allows for installation in upflow, downflow, horizontal left, and horizontal right orientations, meaning it is perfect for a variety of installation applications. With the exception of the 140 size unit, all sizes of the 58MCB can be installed in a manufactured (mobile) home when the optional kit is used and in installations with elevations up to 10,000 ft (140 size unit limitation 7,000 ft). The furnace is factory configured for upflow application but can easily be made ready for downflow or horizontal installation. With the exception of the 140 size, all sizes can be installed with 2-pipe or 1-pipe venting. The 140 size can be installed only as a 2-pipe system.

Horizontal applications offer the advantage of reduced space requirements by locating the furnace in an attic or crawlspace, freeing space formerly dedicated to a furnace or utility room.

The 58MCB is specifically designed to meet the needs of home builders and new home owners. Home builders benefit from the 58MCB's unmatched flexibility and by building a reputation of using quality appliances in homes. Home owners benefit by energy savings from one of the most important home appliances.

The components of the 58MCB represent the finest in the industry. Hot surface ignition (HSI) and a control center provide reliable and efficient ignition. The combustion inducer is unique in that efficient operation is achieved in any type of installation. Standard 2-in. (51 mm) PVC pipe connects the combustion-air and vent pipes to the furnace.

The 58MCB is a standard part of a quality-built new home. This high efficiency furnace will provide years of quality service to home builders and home owners alike.

As with other Carrier furnaces, this model is designed to work as a part of the total home comfort system which includes elements for cooling, air cleaning, humidification, ventilation, and zoning.

58MCB FEATURES / BENEFITS

Serpentuff™—Exclusive Serpentuff coating, a patented polypropylene laminate is used on the secondary heat exchanger.

Power Heat™ Igniter—The Carrier unique SiN igniter is not only physically robust but it is also electrically robust. It is capable of running at line voltage and does not require complex voltage regulators as do other brands. This unique feature further enhances the reliability of the 58MCB gas furnace and continues Carrier's tradition of technology leadership and innovation in providing a reliable and durable product.

Control Center—Controls sequencing and furnace operation. Equipped with a component test feature and status indicator light to assist in troubleshooting. Control times blower start after main burners ignite to eliminate cold air blowing into rooms.

Direct or Non-direct Venting—The 58MCB can be installed as a 1 pipe-Non- Direct vent or 2 pipe/Direct vent furnace except the 140 size which can be installed as 2-pipe only. This provides added flexibility to meet diverse installation needs.

Adjustable Blower Speed—For precise airflow selection of heating or cooling operation.

Casing—One piece, seamless wraparound construction of prepainted galvanized steel resists corrosion.

Combustion Products Venting—The combustion-air and vent pipes can terminate through a side wall or through the roof when used with a factory authorized vent termination kit.

Insulation—Foil-faced insulation in heat exchanger section of the casing minimizes heat loss.

Certifications—The 58MCB units are CSA (A.G.A. and C.G.A.) design certified for use with natural and propane gases. The furnace is factory-shipped for use with natural gas. A CSA (A.G.A./ C.G.A.) listed gas conversion kit is required to convert furnace for use with propane gas. The efficiency is GAMA efficiency rating certified. The 58MCB meets California Air Quality Management District emission requirements. Except for the 140 size unit, all sizes of the 58MCB can be installed in a manufactured (mobile) home when the optional kit is used. Refer to Vent Table for elevation limitations.

Quality Registration—The 58MCB is engineered and manufactured under an ISO 9001 registered quality system.

MODEL NUMBER NOMENCLATURE

58MCB 040 100 08

4-Way Multipoise Fixed-Capacity Direct-Vent (2-Pipe) and Non-Direct Vent (1-Pipe) Condensing Gas Furnace

Input Rate
040 — 40,000 Btuh
060 — 60,000 Btuh
080 — 80,000 Btuh
100 — 100,000 Btuh
120 — 120,000 Btuh
140 — 138,000 Btuh

Series

Cooling Size Airflow
(Nominal 400 CFM per 12,000 Btuh Cooling)
08 — 800 CFM
12 — 1200 CFM
16 — 1600 CFM
20 — 2000 CFM

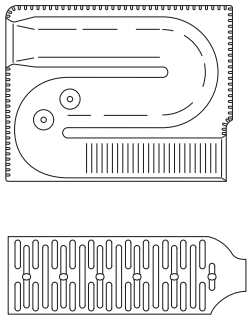

A92505

HEAT EXCHANGERS

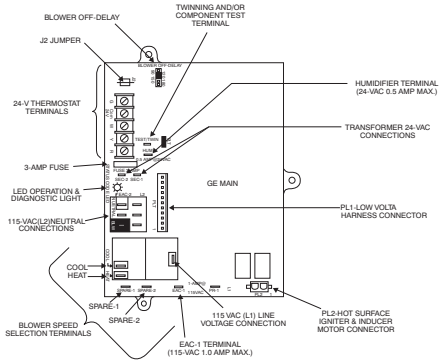

A02100

CONTROL CENTER

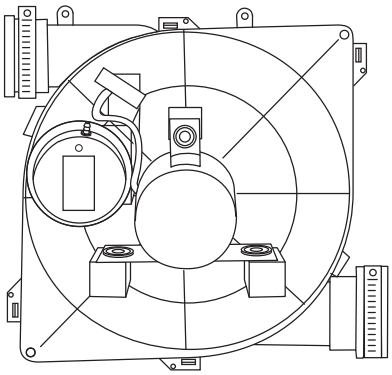

A02172

INDUCER ASSEMBLY

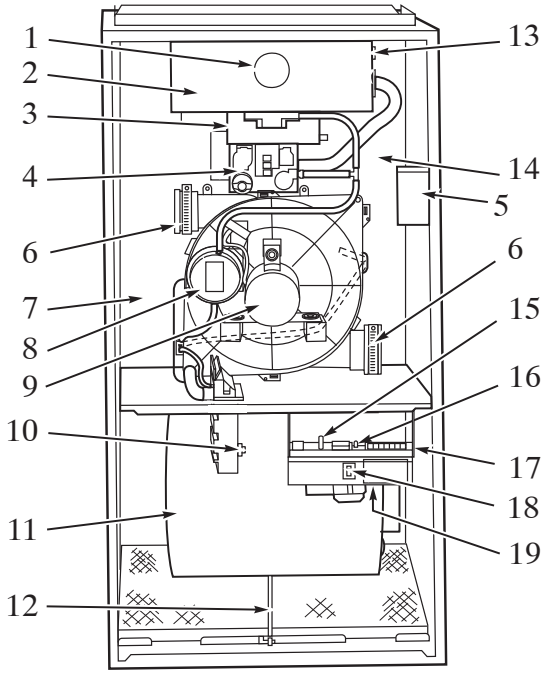

A02173

NOTE:

- The 58MCB Furnace is built for use with natural gas. The furnace can be converted for propane gas with a factory-authorized and listed accessory conversion kit.
- Control location and actual controls may be different than shown above.

1. Burner sight glass for viewing burner flame.
2. Burner assembly (inside), operates with energy-saving, inshot burners and hot surface igniter for safe, dependable heating.
3. Combustion-air intake connection to ensure contaminant-free air (right or left side).
4. Redundant gas valve, safe, efficient, features 1 gas control with 2 internal shutoff valves.
5. Junction box for 115-v electrical power supply. (right or left side)
6. Vent outlet uses sealed PVC pipe to carry vent gases from the furnace's combustion system (right or left side).
7. Secondary condensing heat exchanger (inside), wrings out more heat through condensation of gases. Constructed with polypropylene-laminated steel to ensure durability.
8. Pressure switch ensures adequate flow of flue products through furnace and out vent system.
9. Inducer motor pulls hot flue gases through the heat exchangers, maintaining negative pressure for added safety.
10. Condensate drain connection collects moisture condensed during the combustion process.
11. Heavy-duty blower circulates air across the heat exchangers to transfer heat into the home.
12. Air filter and retainer may be used for side or bottom return application.
13. Rollout switch (manual reset) to prevent overtemperature in burner area.
14. Primary serpentine heat exchanger (inside). Stretches fuel dollars with the S-shaped heat-flow design. Solid weld-free construction of corrosion-resistant aluminized steel means reliability.
15. A 3-amp fuse provides electrical and component protection.
16. Light emitting diode (LED) on control center. Code lights are for diagnosing furnace operation and service requirements.
17. Control center.
18. Blower access panel safety interlock switch.
19. Transformer (24v) behind control center provides low-voltage power to furnace control center and thermostat.

SPECIFICATIONS

UNIT SIZE			040–08	040–12	060–08	060–12	060–16	080–12
Shipping Weight – Lb. (KG)			164 (74)	165 (75)	172 (78)	170 (77)	170 (77)	189 (86)
RATINGS AND PERFORMANCE								
Input Btuh*			40,000	40,000	60,000	60,000	60,000	80,000
Output Capacity BTUH* (ICS) (Shaded capacities are specified on rating plate)	Direct Vent (2–Pipe)	Upflow	37,000	37,000	56,000	56,000	56,000	74,000
		Downflow	37,000	37,000	56,000	56,000	56,000	74,000
		Horizontal	37,000	37,000	56,000	56,000	56,000	74,000
	Non–Direct Vent (1–Pipe)	Upflow	37,000	37,000	56,000	56,000	56,000	74,000
		Downflow	37,000	37,000	56,000	56,000	56,000	74,000
		Horizontal	37,000	37,000	56,000	56,000	56,000	74,000
AFUE%† Nonweatherized ICS	Direct Vent (2–Pipe)	Upflow	92.3	92.3	92.3	92.3	92.3	92.3
		Downflow	91.2	91.2	91.2	91.2	91.2	91.2
		Horizontal	92.1	92.1	92.1	92.1	92.1	92.1
	Non–Direct Vent (1–Pipe)	Upflow	92.1					
		Downflow	91					
		Horizontal	91					
Certified Temperature Rise Range °F (°C)			30–60 (17–33)	15–45 (8–25)	45–75 (25–41)	30–60 (17–33)	20–50 (11–28)	40–70 (22–39)
Certified External Static Pressure		Heating	0.10	0.10	0.12	0.12	0.12	0.15
		Cooling	0.50	0.50	0.50	0.50	0.50	0.50
Airflow CFM‡		Heating	850	1125	885	1065	1320	1190
		Cooling	895	1215	900	1200	1545	1245
ELECTRICAL								
Unit Volts–Hertz–Phase			115–60–1					
Operating Voltage Range Min–Max**			104–127					
Maximum Unit Amps			6.1	7.4	6.1	7.2	9.6	7.7
Unit Ampacity††			8.4	10.0	8.4	9.8	12.8	10.4
Minimum Wire Size			14	14	14	14	14	14
Maximum Wire Length – Ft (M)‡‡			44 (13.4)	37 (11.2)	44 (13.4)	38 (11.5)	29 (8.8)	36 (10.9)
Maximum Fuse Size or Ckt Bkr Amps (Time–Delay Type Recommended)			15	15	15	15	15	15
Transformer (24v)			40va					
External Control Power Available		Heating	12va					
		Cooling	21va					
Air Conditioning Blower Relay			Standard					
CONTROLS								
Limit Control			SPST					
Heating Blower Control (Off Delay)			Factory–Set at 135 Sec					
Burners (Monoport)			2	2	3	3	3	4
Gas Connection Size			1/2–in. NPT					
GAS CONTROLS								
Gas Valve (Redundant)		Manufacturer	White–Rodgers					
		Min Inlet Pressure (In. wc)	4.5 (Natural Gas)					
		Max Inlet Pressure (In. wc)	13.6 (Natural Gas)					
Ignition Device			Hot Surface					
BLOWER DATA								
Direct–Drive Motor HP (Permanent Split Capacitor)			1/5	1/3	1/5	1/3	1/2	1/3
Motor Full Load Amps			4.9	5.8	4.9	5.8	7.9	5.8
RPM (Nominal)–Speeds			1075–3	1075–4	1075–3	1075–4		
Blower Wheel Diameter x Width – In. (mm)			10 x 6 (254 x 152)	10 x 7 (254 x 178)	10 x 6 (254 x 152)	10 x 7 (254 x 178)	11 x 8 (279 x 203)	10 x 7 (254 x 178)
Filter Size – In. (mm)–Sold Separately			(1) 16 x 25 x 3/4 (406 x 635 x 19)					
FACTORY–AUTHORIZED AND LISTED, DEALER–INSTALLED OPTIONS								
Gas Conversion Kit–Natural–to–Propane			KGANP4601ALL					
Gas Conversion Kit–Propane–to–Natural			KGAPN3901ALL					
Twinning Kit			N/A				KGATW 0601HSI	N/A
Manufactured (Mobile) Home Kit			KGAMH0301KIT					
Downflow Base***			KGASB0301ALL					
Vent Termination Kit (Bracket Only for 2 Pipes)			2–in.–KGAVT0101BRA			3–in.–KGAVT0201BRA		
Concentric Vent Termination Kit (Single Exit)			2–in.–KGAVT0701CVT			3–in.–KGAVT0801CVT		
Condensate Freeze Protection Kit			KGAHT0101CFP					
Condensate Neutralizer Kit (Obtained Thru RCD)			P908–0001					
Side Filter Rack (Without Filter)–Upflow ONLY			KGAFR0206ALL					
Electronic/Mechanical Air Cleaner			Model EACA, EZXCAB, or FILCAB					
Humidifier			Model HUM					
Heat/Energy Recovery Ventilator			Model HRV					
UV Lights			Model UVL					
Door Gasket Kit			KGBAC0110DGK					
Unframed Filter Permanent Washable 3/4–in. (19 mm) thick 16 x 25 (406 x 635 mm) 24 x 25 (610 x 635 mm)			 KGAWF1306UFR KGAWF1506UFR					

58MCB

SPECIFICATIONS (CONTINUED)

UNIT SIZE			080–16	080–20	100–16	100–20	120–20	140–20
Shipping Weight – Lb. (KG)			193 (88)	201 (91)	215 (98)	218 (99)	246 (112)	249 (113)
RATINGS AND PERFORMANCE								
Input Btuh*			80,000	80,000	100,000	100,000	120,000	138,000
Output Capacity BTUH* (ICS) (Shaded capacities are specified on rating plate)	Direct Vent (2–Pipe)	Upflow	74,000	74,000	93,000	93,000	112,000	127,000
		Downflow	74,000	74,000	93,000	93,000	112,000	127,000
		Horizontal	74,000	74,000	93,000	93,000	112,000	127,000
	Non–Direct Vent (1–Pipe)	Upflow	74,000	74,000	93,000	93,000	112,000	NA
		Downflow	74,000	74,000	93,000	93,000	112,000	NA
		Horizontal	74,000	74,000	93,000	93,000	112,000	NA
AFUE%† Nonweatherized ICS	Direct Vent (2–Pipe)	Upflow	92.3	92.3	92.3	92.3	92.3	92.3
		Downflow	91.2	91.2	91.2	91.2	91.2	91.2
		Horizontal	92.1	92.1	92.1	92.1	92.1	92
	Non–Direct Vent (1–Pipe)	Upflow	92.1					NA
		Downflow	91					NA
		Horizontal	91					NA
Certified Temperature Rise Range °F (°C)			30–60 (17–33)	20–50 (11–28)	45–75 (25–41)	30–60 (17–33)	40–70 (22–39)	50–80 (28–44)
Certified External Static Pressure		Heating	0.15	0.15	0.20	0.20	0.20	0.20
		Cooling	0.50	0.50	0.50	0.50	0.50	0.50
Airflow CFM‡		Heating	1285	1785	1315	1690	1720	1970
		Cooling	1525	1925	1570	1930	2000	1990
ELECTRICAL								
Unit Volts–Hertz–Phase			115–60–1					
Operating Voltage Range Min–Max**			104–127					
Maximum Unit Amps			10.1	14.1	10.2	14.8	14.6	14.6
Unit Ampacity††			13.4	18.4	13.5	19.3	19.1	18.8
Minimum Wire Size			14	12	14	12	12	12
Maximum Wire Length – Ft (M)‡‡			28 (8.5)	31 (9.4)	27 (8.2)	30 (9.1)	30 (9.1)	30 (9.1)
Maximum Fuse Size or Ckt Bkr Amps (Time–Delay Type Recommended)			15	20	15	20	20	20
Transformer (24v)			40va					
External Control Power Available		Heating	12va					
		Cooling	21va					
Air Conditioning Blower Relay			Standard					
CONTROLS								
Limit Control			SPST					
Heating Blower Control (Off Delay)			Factory–Set at 135 Sec					
Burners (Monoport)			4	4	5	5	6	6
Gas Connection Size			1/2–in. NPT					
GAS CONTROLS								
Gas Valve (Redundant)		Manufacturer	White–Rodgers					
		Min Inlet Pressure (In. wc)	4.5 (Natural Gas)					
		Max Inlet Pressure (In. wc)	13.6 (Natural Gas)					
Ignition Device			Hot Surface					
BLOWER DATA								
Direct–Drive Motor HP (Permanent Split Capacitor)			1/2	3/4	1/2	3/4	3/4	3/4
Motor Full Load Amps			7.9	11.1	7.9	11.1	11.1	11.1
RPM (Nominal)–Speeds			1075–4					
Blower Wheel Diameter x Width – In. (mm)			11 x 8 (279x203)	11 x 10 (279x254)	11 x 8 (279x203)	11 x 10 (279x254)	11 x 10 (279x254)	11 x 10 (279x254)
Filter Size – in. (mm)–Sold Separately			(1) 20 x 25 x 3/4 (508 x 635 x 19)				(2)16 x 25 x 3/4 (406 x 635 x 19)	
FACTORY–AUTHORIZED AND LISTED, DEALER–INSTALLED OPTIONS								
Gas Conversion Kit–Natural–to–Propane			KGANP4601ALL					
Gas Conversion Kit–Propane–to–Natural			KGAPN3901ALL					
Twinning Kit			KGATW0601HSI					N/A
Manufactured (Mobile) Home Kit			KGAMH0301KIT					N/A
Downflow Base***			KGASB0301ALL					
Vent Termination Kit (Bracket Only for 2 Pipes)			2–in.–KGAVT0101BRA			3–in.–KGAVT0201BRA		
Concentric Vent Termination Kit (Single Exit)			2–in.–KGAVT0701CVT			3–in.–KGAVT0801CVT		
Condensate Freeze Protection Kit			KGAHT0101CFP					
Condensate Neutralizer Kit (Obtained Thru RCD)			P908–0001					
Side Filter Rack (Without Filter)–Upflow ONLY			KGAFR0206ALL					
Electronic/Mechanical Air Cleaner			Model EACB, EZXCAB, or FILCAB					
Humidifier			Model HUM					
Heat/Energy Recovery Ventilator			Model HRV					
UV Lights			Model UVL					
Door Gasket Kit			KGBAC0110DGK					
Unframed Filter Permanent Washable 3/4–in. (19 mm) thick 16 x 25 (406 x 635 mm) 24 x 25 (610 x 635 mm)			 KGAWF1306UFR KGAWF1506UFR					

* Gas input ratings are certified for elevations to 2000 ft. (610 M). In U.S., for elevations above 2000 ft. (610 M), reduce ratings 2% for each 1000 ft. (305 M) above sea level. In Canada, derate the unit 5% from 2000 to 4500 ft. (610 to 1372 M) above sea level.

† Capacity and AFUE in accordance with U.S. Government DOE test procedures.

‡ Airflow shown is for bottom only return–air supply with 3/4–in. (19 mm) filter(s). Air delivery above 1800 CFM may require that both sides, a combination of 1 side and bottom, or bottom only of the furnace be used for return air, see Air Delivery table. Where 2 sets of data are listed, the first set is for bottom only return–air supply. The second set is for both sides, or 1 side and bottom return–air supply. A filter is required for each return–air supply.

** Permissible voltage limits for proper furnace operation.

†† Unit ampacity = 125% of largest component's full load amps plus 100% of all other potential operating components (EAC, humidifier, etc.).

‡‡ Length shown is measured 1 way along wire path between unit and service panel for maximum 2% voltage drop.

*** Required for installation on combustible floors when no coil box is used, or when any coil box other than a Carrier CD5, CK5, CAP(R), CNP(R), or KCAKC cased coil is used.

N/A – Not applicable

ICS – Isolated Combustion System

CONTROLS - THERMOSTATS AND ZONING

58MCB

Non-Programmable Thermostat Section

TP–NAC, TC–NAC	For use with 1–speed Air Conditioner – deg. F/C, Auto Changeover
TP–NHP, TC–NHP	For use with 1 or 2–speed Heat Pumps – deg. F/C, Auto Changeover
TP–NRH†‡	For multi-use / stage configurations – deg. F/C, Auto Changeover/Temperature and Humidity Control

Programmable Thermostat Section

TC–PAC	For use with 1-speed Air Conditioner - deg. F/C, Auto Changeover, 7-Day Programmable
TC–PHP	For use with 1 or 2-speed Heat Pumps - deg. F/C, Auto Changeover, 5-2 Day Programmable
TP–PAC	For use with 1-speed Air Conditioner - deg. F/C, 7 Day Programmable
TP–PHP	For use with 1 or 2-speed Heat Pumps F/C, Auto Changeover, 7-Day Programmable
TP–PRH‡	For multi-use / stage configurations - deg. F/C, Auto Changeover, 7-Day Programmable/Temperature and Humidity Control

Zoning Control Selection

ZONECC3ZAC01 ZONECC3ZHP01	Zone Perfect Two–Zone kit
ZONECC2KIT01–B	Zone Perfect Plus 2–Zone kit/Temperature and Humidity Control
ZONECC4KIT01–B	Zone Perfect Plus 4–Zone kit/Temperature and Humidity Control
ZONECC8KIT01–B	Zone Perfect Plus 8–Zone kit/Temperature and Humidity Control

†Thermidistat™ Control control can be configured for multiple use and staging. It must be configured for each specific application.
‡HYBRID HEAT™ thermostat is used with furnace and heat pump application.

Use of the AHRI Certified TM Mark indicates a manufacturer's participation in the program. For verification of certification for individual products, go to www.ahridirectory.org.

Always Ask For FACTORY AUTHORIZED PARTS

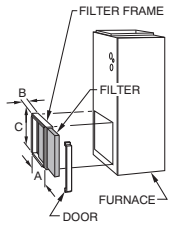

A93068

SIDE FILTER RACK

Custom-made filter rack for easy connection when a return plenum already exists. Provides easy access for cleaning filter.

Accepts one 16 x 25 x 1 in. filter. (Not included)

A	23-1/8 in.
B	2-3/8 in.
C	14-1/2 in.

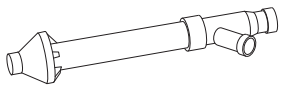

A93086

CONCENTRIC VENT (Direct Vent/2-Pipe Application)

A concentric vent kit allows vent and combustion-air pipes to terminate through a single exit in a roof or side wall.

One pipe runs inside the other allowing venting through the inner pipe and combustion air to be drawn in through the outer pipe.

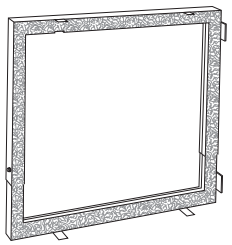

A88202

DOWNFLOW SUBBASE

One base fits all furnace sizes. The base is designed to be installed between the furnace and a combustible floor when no coil box is used or when a coil box other than a Carrier cased coil is used. It is CSA (A.G.A./C.G.A.) design certified for use with Carrier 58MCB furnaces when installed in downflow

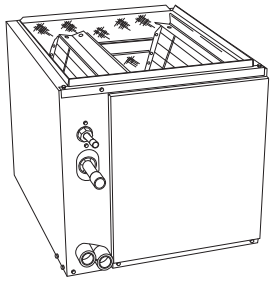

A96214

CARRIER CASED N-COIL
(as shown)

The Carrier Cased N-Coil or A-Coil is an upflow/downflow furnace coil which can also replace the downflow subbase when installing the 58MCB on combustible flooring in the downflow orientation.

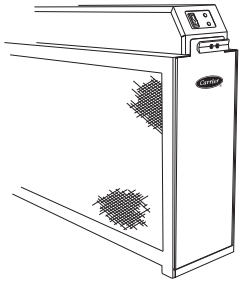

A97152

ELECTRONIC AIR CLEANER

Cleans the air of smoke, dirt, and many pollens commonly found. Saves decorating and cleaning expenses by keeping carpets, furniture, and drapes cleaner.

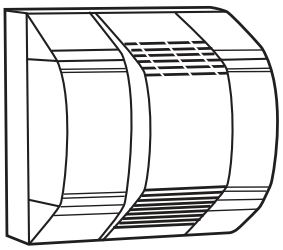

A01484

HUMIDIFIER

By adding moisture to winter-dry air, a Carrier humidifier can often improve comfort and keeps woodwork, wallpaper, and paint in better condition. Moisturizing household air also helps to retain normal body heat and provides comfort at lower temperatures.

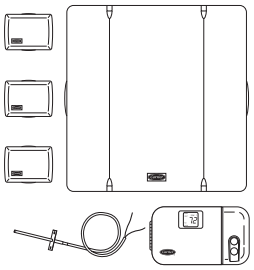

A97432

CONTROLS: THERMOSTATS AND ZONING

Available in programmable and non-programmable models, Carrier thermostats maintain a constant, comfortable temperature level in the home.

For the ultimate in home comfort, Carrier's 2, 4, and 8-zone systems allow temperature control of individual zones of the home. This is accomplished through a series of electronic dampers and remote room sensors. The 4-zone system is shown.

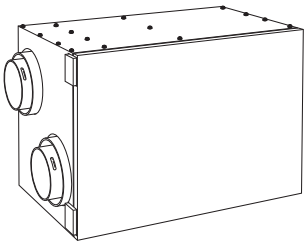

A94336

ENERGY/HEAT RECOVERY VENTILATOR

Carrier's energy or heat recovery ventilators exhaust stale indoor air and provide fresh outdoor air to the home while minimizing heat loss and humidity level. Especially useful for today's tighter constructed houses.

Energy recovery ventilator is shown.

A08152

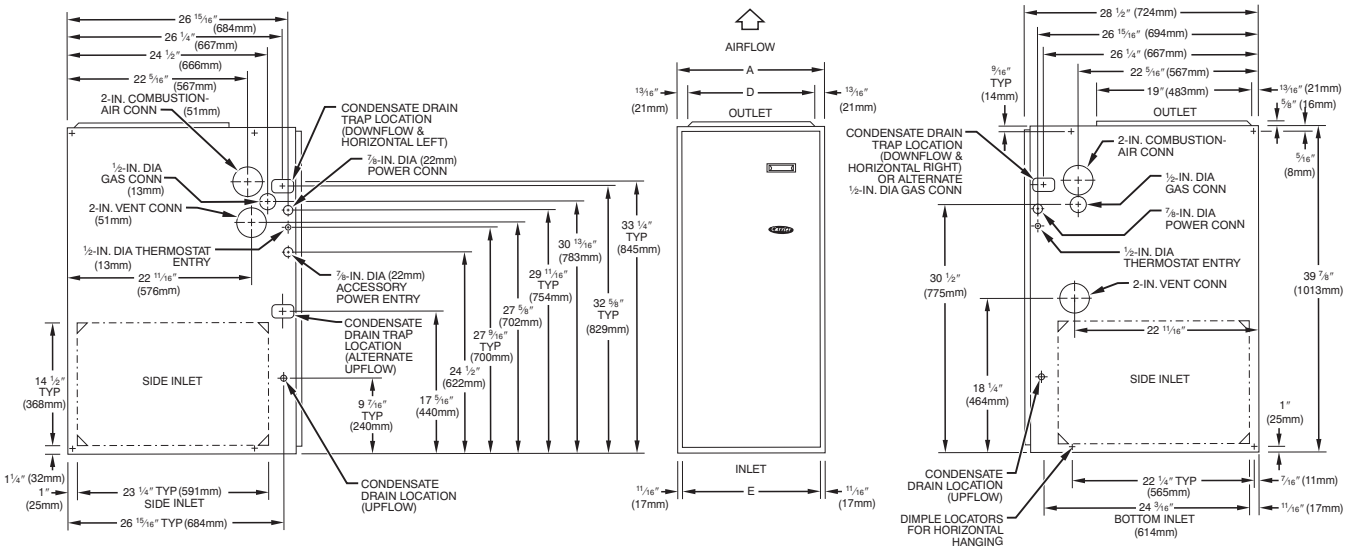

NOTES: 1. Minimum return-air openings at furnace, based on metal duct. If flex duct is used, see flex duct manufacturer's recommendation for equivalent diameters.

2. Minimum return-air opening at furnace:
   a. For 800 CFM 16-in . (406mm) round or 14 1/2 (368mm) x 12-in. (305mm) rectangle.
   b. For 1200 CFM 20-in . (508mm) round or 14 1/2 (368mm) x 19 1/2-in. (495mm) rectangle.
   c. For 1600 CFM 22-in .(559mm) round or 14 1/2 (368mm) x 23 1/4-in.(591mm) rectangle.
   d. For airflow requirements above 1800 CFM, see Air Delivery table in Product Data literature for specific use of single side inlets. The use of both side inlets, a combination of 1 side and the bottom, or the bottom only will ensure adequate return air openings for airflow requirements above 1800 CFM at 0.5" W.C. ESP.

A05105

Dimensions – IN. (mm)

UNIT SIZE	A	D	E
040–08	17-1/2 (445)	15-7/8 (403)	16 (406)
040–12	17-1/2 (445)	15-7/8 (403)	16 (406)
060–08	17-1/2 (445)	15-7/8 (403)	16 (406)
060–12	17-1/2 (445)	15-7/8 (403)	16 (406)
060–16	17-1/2 (445)	15-7/8 (403)	16 (406)
080–12	17-1/2 (445)	15-7/8 (403)	16 (406)
080–16	17-1/2 (445)	15-7/8 (403)	16 (406)
080–20	21 (533)	19-3/8 (492)	19-1/2 (495)
100–16	21 (533)	19-3/8 (492)	19-1/2 (495)
100–20	21 (533)	19-3/8 (492)	19-1/2 (495)
120–20	24-1/2 (622)	22-7/8 (581)	23 (584)
140–20	24-1/2 (622)	22-7/8 (581)	23 (584)

ACCESSORY DOWNFLOW SUBBASE

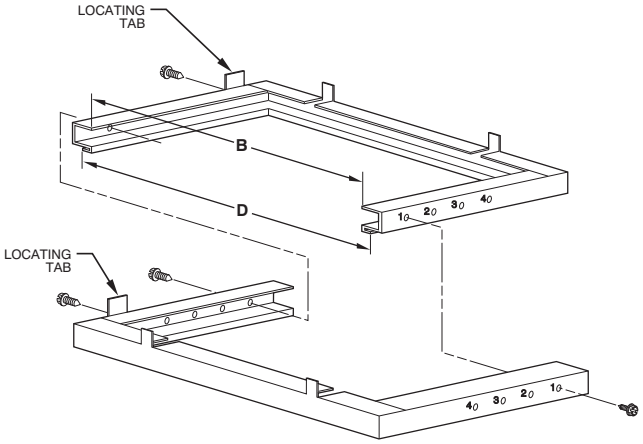

A88207

Disassembled

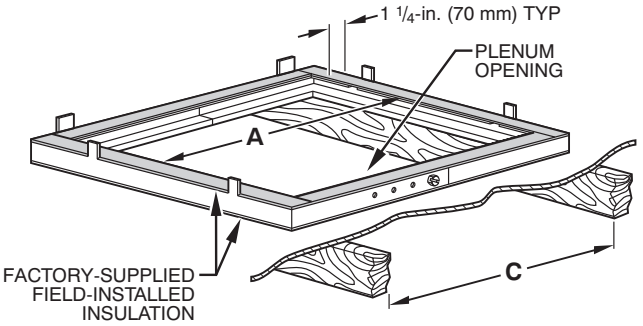

A97427

Assembled

FURNACE CASING WIDTH IN. (mm)	FURNACE IN DOWNFLOW APPLICATION	PLENUM OPENING* IN. (mm)		FLOOR OPENING IN. (mm)		HOLE NO. FOR WIDTH ADJUSTMENT
		A	B	C	D	
17–1/2 (445 mm)	Furnace with or without Cased Coil Assembly or Coil Box	15–1/8 (384 mm)	19 (483 mm)	16–3/4 (426 mm)	20–3/8 (518 mm)	3
21 (533 mm)	Furnace with or without Cased Coil Assembly or Coil Box	18–5/8 (473 mm)	19 (483 mm)	20–1/4 (514 mm)	20–3/8 (518 mm)	2
24–1/2 (622 mm)	Furnace with or without Cased Coil Assembly or Coil Box	22–1/8 (562 mm)	19 (483 mm)	23–3/4 (603 mm)	20–3/8 (518 mm)	1

*The plenum should be constructed 1/4 in. (6 mm) smaller in width and depth than the plenum dimensions shown above.

COMBUSTION-AIR PIPE FOR NON-DIRECT VENT (1-PIPE) APPLICATION (SIZES 040 THOUGH 120 ONLY)

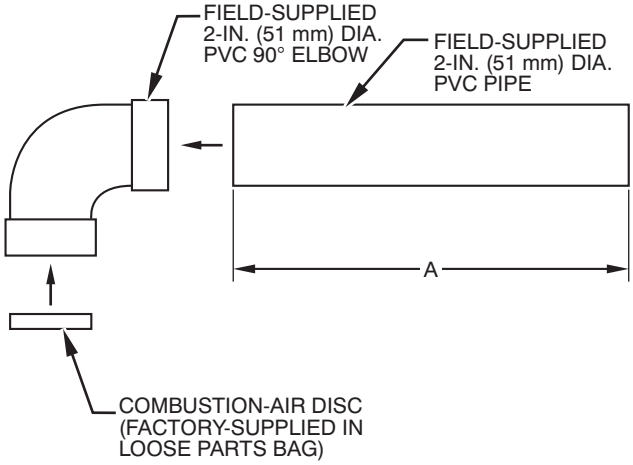

A96211

CASING WIDTH IN. (mm)	A IN. (mm)
17 – 1/2 (445)	8-1/2 ± 1/2 (216 ± 13)
21 (533)	10-1/2 ± 1/2 (267 ± 13)
24 – 1/2 (622)	12 ± 1/2 (305 ± 13)

CONCENTRIC VENT FOR DIRECT VENT (2-PIPE) APPLICATION (ALL MODEL SIZES)

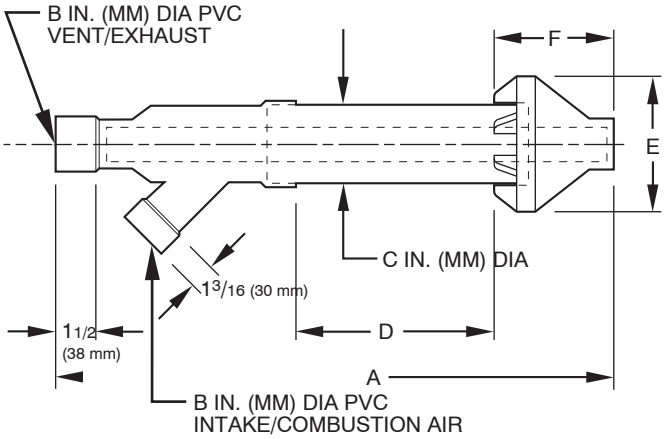

A97110

PART NO.	A*	B	C	D†	E	F
KGAVT0701CVT	33 – 3/8 (848)	2 (51)	3 – 1/2 (89)	16 – 5/8 (422)	6 – 1/4 (159)	5 – 3/4 (146)
KGAVT0801CVT	38 – 7/8 (987)	3 (76)	4 – 1/2 (114)	21 – 1/8 (537)	7 – 3/8 (187)	6 – 1/2 (165)

* Dimension A will change accordingly as dimension D is lengthened or shortened.

† Dimension D may be lengthened to 60 in. (1524 mm) maximum. Dimension D may also be shortened by cutting the pipes provided in the kit to 12 in. (305 mm) minimum.

NOTE: See furnace Installation Instructions when venting multiple furnaces near each other.

CONDENSATE TRAP

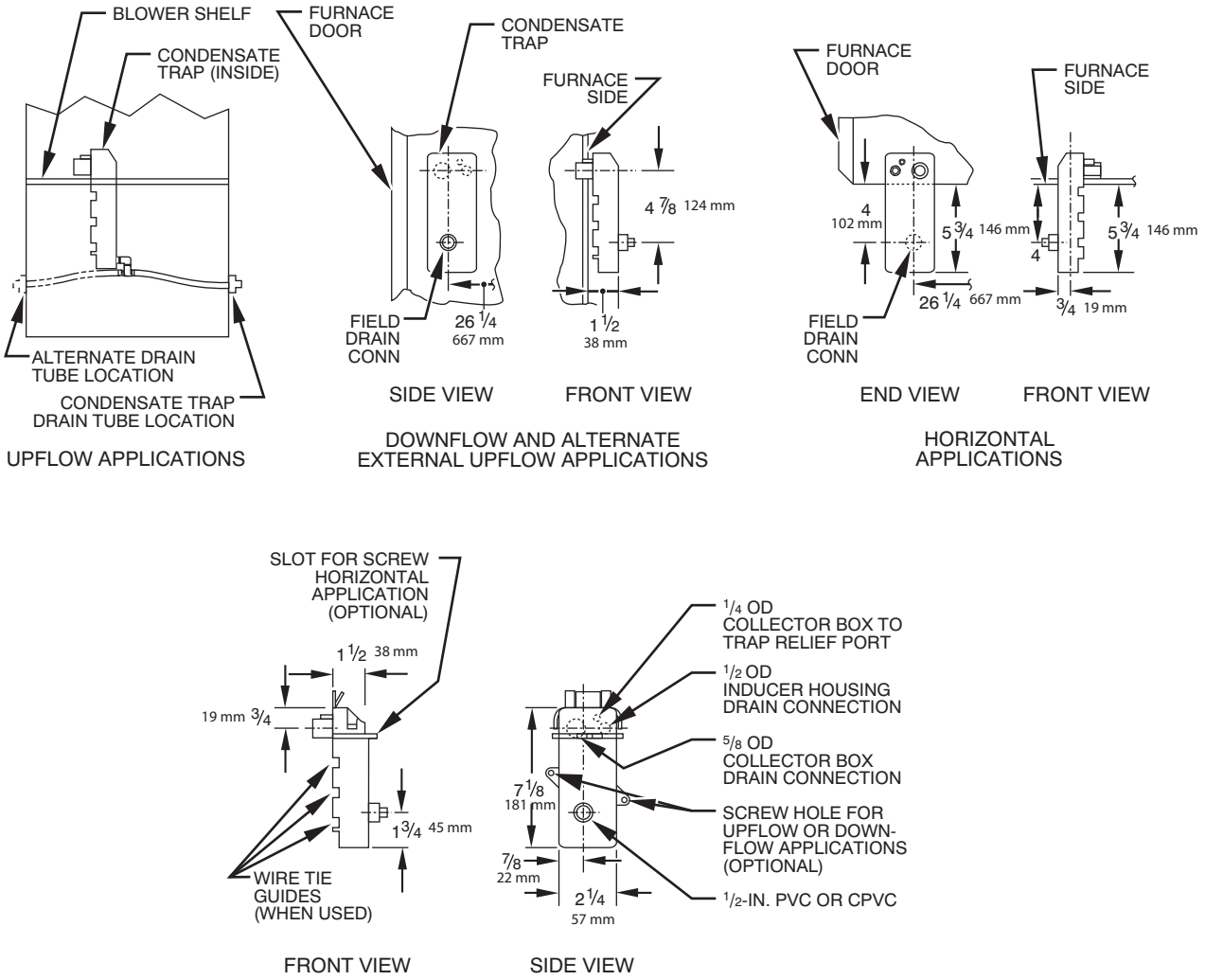

TYPICAL WIRING SCHEMATIC

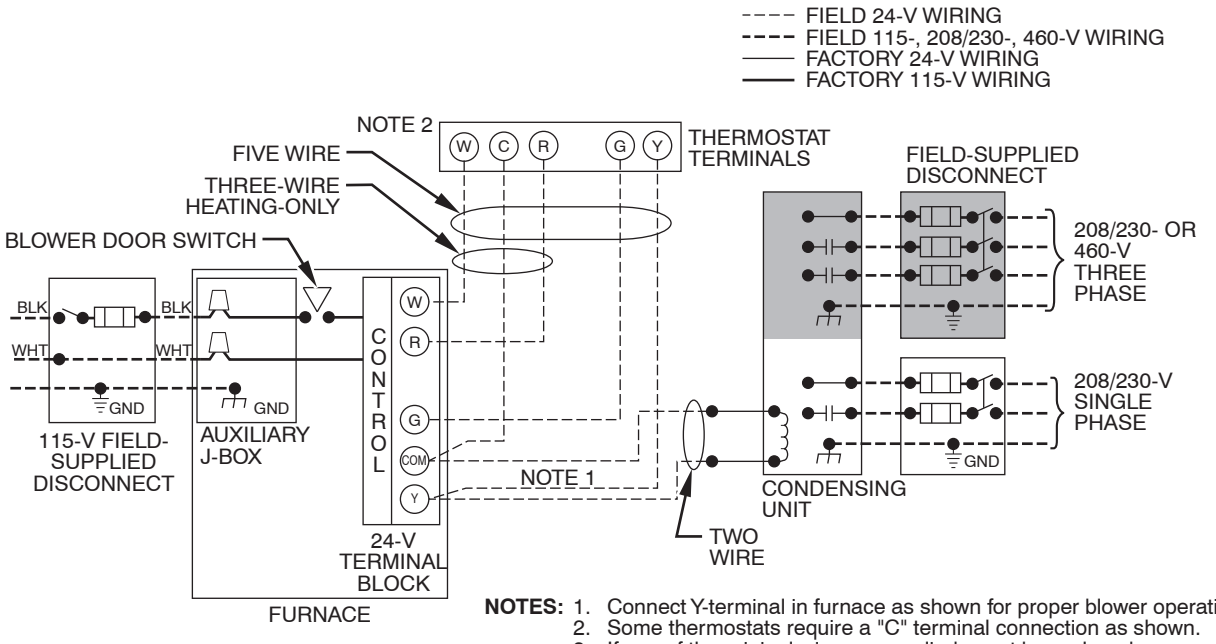

NOTES: 1. Connect Y-terminal in furnace as shown for proper blower operation.
2. Some thermostats require a "C" terminal connection as shown.
3. If any of the original wire, as supplied, must be replaced, use same type or equivalent wire.

A02174

CLEARANCE TO COMBUSTIBLES

58MCB

INSTALLATION

- This forced air furnace is equipped for use with natural gas at altitudes 0 - 10,000 ft (0 - 3,050m), except 140 size furnaces are only approved for altitudes 0 - 7,000 ft. (0 - 2,135m).
- An accessory kit, supplied by the manufacturer, shall be used to convert to propane gas use or may be required for some natural gas applications.
- This furnace is for indoor installation in a building constructed on site. This furnace may be installed in a manufactured (mobile) home when stated on rating plate and using factory authorized kit..
- This furnace may be installed on combustible flooring in alcove or closet at **Minimum Inches Clearance To Combustible Construction** as described below.
- This furnace requires a special venting system. Refer to the installation instructions for parts list and method of installation. In the US this furnace is for use with schedule-40 PVC, PVC-DWV, CPVC, or ABS-DWV pipe, and must not be vented in common with other gas-fired appliances. In Canada, refer to installation instructions for vent materials. Construction through which vent/air intake pipes may be installed is maximum 24 inches (610 mm), minimum 3/4 inches (19 mm) thickness (including roofing materials).
- Cette fournaise à air pulsé est équipée pour utilisation avec gaz naturel et altitudes comprises entre 0 - 3,050m (0 - 10,000 pi),excepté queles fournaises de 140 taille sont pour altitudes comprises entre 0 - 2,135m (0 - 7,000pi).
- Utiliser une trousse de conversion, fournie par le fabricant, pour passer au gaz propane ou pour certaines installations au gaz naturel.
- Cette fournaise à air pulsé est pour installation à l´intérieur dans un bâtiment construit sur place. Cette fournaise à air pulse peut être installée dans une maison préfabriquée (maison mobile) si prescrit par la plaque signalétique et si'l on utilise une trousse specifiée par le fabricant.
- Cette fournaise peut être installée sur un plancher combustible dans un enfoncement ou un placard en observant les **Dégagement Minimum En Pouces Avec Éléments De Construction Combustibles.**
- Cette fournaise nécessite un système d´évacuation spécial. La méthode d´installation et la liste des pièces nécessaires figurent dans les instructions d´installation. Aux Etats-Unis, cette fournaise doit s´utiliser avec la tuyauterie des nomenclatures 40 PVC, PVC-DWV, CPVC, ou ABS-DWV et elle ne peut pas être ventilée conjointment avec d´autres appareils à gaz. Au Canada, referer aux instructions d'installation pour lex matériaux à ventiler. Épaisseur de la construction au travers de laquelle il est possible de faire passer les tuyaux d'aération (admission/évacuation): 24 po (610 mm) maximum, 3/4 po (19mm) minimum (y compris la toiture).

For upflow and downflow applications, furnace must be installed level, or pitched within 1/2" (12.7mm) of level. For a horizontal application, the furnace must be pitched minimum 1/4" (6.35mm) to maximum of 1/2" (12.7mm) forward for proper drainage. See Installation Manual for IMPORTANT unit support details on horizontal applications.

Pour des applications de flux ascendant et descendant, la fournaise doit être installée de niveau ou inclinée à pas plus de 1/2" (12.7mm) du niveau. Pour une application horizontale, la fournaise doit être inclinée entre minimum 1/4" (6.35mm) et maximum 1/2" (12.7mm) du niveau pour le drainage approprié. En cas d´installation en position horizontale, consulter les renseignements IMPORTANTS sur le support dans le manuel d´installation.

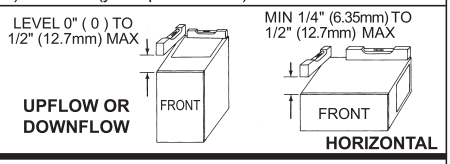

MINIMUM INCHES CLEARANCE TO COMBUSTIBLE CONSTRUCTION

ALL POSITIONS:

* Minimum front clearance for service 24 inches (610mm).

† † 140 size furnaces require 1 inch back clearance to combustible materials.

DOWNFLOW POSITIONS:

† For installation on combustible floors only when installed on special base No. KGASB0201ALL or NAHA01101SB, Coil Assembly, Part No. CAR, CAP, CNPV, CNRV or Coil Casing, Part No. KCAKC, or WENC or WTNC.

HORIZONTAL POSITIONS:

Line contact is permissible only between lines formed by intersections of top and two sides of furnace jacket, and building joists, studs, or framing.

§ Clearance shown is for air inlet and air outlet ends.

Ø 120 and 140 size furnaces require 1 inch bottom clearance to combustible materials.

DÉGAGEMENT MINIMUM EN POUCES AVEC ÉLÉMENTS DE CONSTRUCTION COMBUSTIBLES

POUR TOUS LES POSITIONS:

* Dégagement avant minimum de 24 po (610mm) pour l´entretien.

† † Pour les fournaises de 140 taille, 1 po (25mm) dégagement des matériaux combustibles est requis au-arriere.

POUR LA POSITION COURANT DESCENDANT:

† Pour l´installation sur le plancher combustible seulement quand on utilise la base spéciale, pièce nº KGASB0201ALL ou NAHA01101SB, l´ensemble serpentin, pièce nº CAR, CAP, CNPV, CNRV, ou le carter de serpentin, pièce nº KCAKC ou WENC ou WTNC.

POUR LA POSITION HORIZONTALE:

Le contact n´est permis qúentre les lignes formées par les intersections du dessus et des deuxcôtés de la chemise de la fournaise, et des solives, des montants ou de la charpente du bâtiment.

§ La distance indiquée concerne l´extrémité du tuyau d´arrivée d´air et l´extrémité du tuyau de sortie d´air.

Ø Pour les fournaises de 120 et 140 taille, 1 po (25mm) dégagement des matériaux combustibles est requis au-dessous.

This furnace is approved for UPFLOW, DOWNFLOW and HORIZONTAL installations.

Cette fournaise est approuvée pour l´installation HORIZONTALE et la circulation d´air VERS LE HAUT et VERS LE BAS.

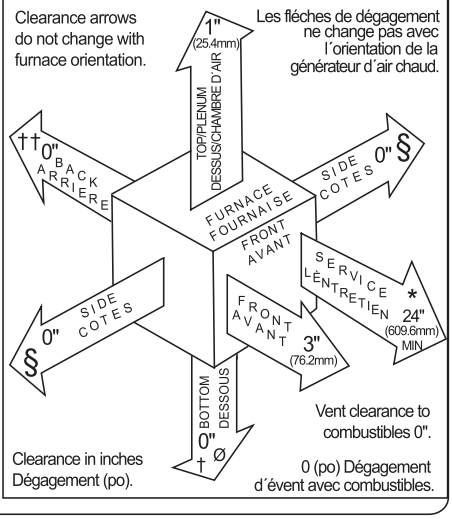

335122-201 REV. B LIT TOP

A08435

AIR DELIVERY-CFM (WITH FILTER)*

UNIT SIZE	RETURN-AIR SUPPLY	SPEED	EXTERNAL STATIC PRESSURE (In. wc)							
			0.1	0.2	0.3	0.4	0.5	0.6	0.7	0.8
040-08	1 side or bottom	High	1075	1040	995	945	895	840	760	670
		Med-Low	850	825	780	740	685	635	560	480
		Low	740	700	650	620	565	515	455	385
040-12	1 side or bottom	High	1470	1415	1400	1285	1215	1120	995	890
		Med-High	1315	1280	1235	1180	1115	1035	930	825
		Med-Low	1125	1110	1085	1045	990	915	830	740
		Low	930	925	910	850	830	770	705	635
060-08	1 side or bottom	High	1100	1065	1005	945	900	805	730	610
		Med-Low	890	865	810	765	705	620	540	475
		Low	745	710	670	625	565	505	425	360
060-12	1 side or bottom	High	1430	1375	1325	1275	1200	1135	1040	935
		Med-High	1270	1260	1215	1160	1105	1035	950	850
		Med-Low	1070	1055	1045	1015	975	920	850	750
		Low	915	895	885	865	840	800	720	650
060-16	1 side or bottom	High	1700	1695	1640	1580	1545	1450	1380	1310
		Med-High	1500	1465	1435	1385	1355	1300	1250	1185
		Med-Low	1325	1295	1265	1230	1190	1150	1105	1050
		Low	1205	1170	1145	1110	1080	1035	990	950
080-12	1 side or bottom	High	1535	1470	1405	1330	1245	1160	1065	935
		Med-High	1395	1350	1300	1225	1155	1080	985	880
		Med-Low	1200	1175	1125	1065	1030	970	890	780
		Low	1040	1020	990	960	910	860	785	680
080-16	1 side or bottom	High	1750	1685	1635	1575	1525	1445	1380	1310
		Med-High	1495	1455	1405	1355	1305	1250	1185	1120
		Med-Low	1310	1260	1225	1170	1125	1095	1040	980
		Low	1135	1105	1075	1040	995	995	910	860
080-20	1 side or bottom	High	2200	2175	2085	2025	1925	1820	1735	1635
		Med-High	2100	2025	1945	1865	1785	1700	1620	1540
		Med-Low	1815	1760	1720	1670	1620	1550	1480	1405
		Low	1560	1555	1515	1460	1435	1390	1340	1270
	both sides or 1 side and bottom	High	2360	2280	2210	2130	2035	1960	1875	1790
		Med-High	1965	1925	1870	1830	1760	1710	1670	1575
100-16	1 side or bottom	High	1740	1705	1660	1615	1570	1500	1425	1355
		Med-High	1500	1470	1445	1410	1375	1330	1280	1210
		Med-Low	1340	1315	1300	1270	1235	1200	1140	1095
		Low	1195	1175	1165	1130	1100	1070	1030	975
100-20	1 side or bottom	High	2250	2175	2090	2020	1930	1855	1760	1670
		Med-High	2020	1950	1900	1840	1790	1710	1640	1545
		Med-Low	1725	1690	1660	1630	1575	1520	1460	1370
		Low	1490	1480	1460	1440	1380	1340	1295	1230
	both sides or 1 side and bottom	High	2360	2315	2265	2200	2130	2055	1965	1890
		Med-High	1960	1940	1930	1900	1850	1800	1740	1660
120-20	bottom only	High	2350	2250	2160	2070	2000	1885	1790	1635
		Med-High	2100	2015	1955	1875	1810	1710	1650	1540
		Med-Low	1770	1720	1675	1620	1575	1515	1450	1365
		Low	1545	1520	1465	1415	1365	1325	1265	1185
	both sides or 1 side and bottom	High	2435	2360	2285	2220	2130	2050	1965	1875
		Med-High	2040	2000	1950	1905	1835	1790	1725	1650
	1 side only	High	2255	2190	2115	2045	1965	1890	1800	1710
		Med-High	1985	1930	1890	1840	1780	1720	1645	1560
140-20	bottom only	High	2285	2210	2140	2065	1990	1910	1830	1745
		Med-High	2020	1970	1920	1870	1805	1730	1660	1590
		Med-Low	1675	1650	1620	1590	1560	1510	1450	1390
		Low	1460	1445	1430	1400	1370	1320	1275	1230
	both sides or 1 side and bottom	High	2310	2255	2185	2120	2045	1965	1880	1800
		Med-High	1975	1945	1900	1860	1835	1775	1720	1640
	1 side only	High	2140	2080	2025	1945	1875	1795	1725	1625
		Med-High	1930	1850	1800	1740	1725	1660	1580	1495

* A filter is required for each return–air supply.
*For horizontal and downflow applications, use “1 side or bottom” or “bottom only” as airflow reference.

MAXIMUM ALLOWABLE PIPE LENGTH - FT (M)

ALTITUDE FT (M)	UNIT SIZE (BTUH)	DIRECT VENT (2-PIPE) ONLY		NON-DIRECT VENT (1-PIPE) ONLY	NUMBER OF 90° ELBOWS					
		TERMINATION TYPE	PIPE DIA IN. (mm)*	PIPE DIA IN. (mm)*	1	2	3	4	5	6
0 to 2000 (0 to 610)	40,000	2 Pipe or 2-in. (51 mm) Concentric	1 (25)	1 (25)	5 (1.5)	NA	NA	NA	NA	NA
			1-1/2 (38)	1-1/2 (38)	70 (21.3)	70 (21.3)	65 (19.8)	60 (18.3)	60 (18.3)	55 (16.8)
			2 (51)	2 (51)	70 (21.3)	70 (21.3)	70 (21.3)	70 (21.3)	70 (21.3)	70 (21.3)
	60,000	2 Pipe or 2-in. (51 mm) Concentric	1-1/2 (38)	1-1/2 (38)	20 (6.1)	15 (4.6)	10 (3.0)	5 (1.5)	NA	NA
			2 (51)	2 (51)	70 (21.3)	70 (21.3)	70 (21.3)	70 (21.3)	70 (21.3)	70 (21.3)
	80,000	2 Pipe or 2-in. (51 mm) Concentric	1-1/2 (38)	1-1/2 (38)	10 (3.0)	NA	NA	NA	NA	NA
			2 (51)	2 (51)	55 (16.8)	50 (15.2)	35 (10.7)	30 (9.1)	30 (9.1)	20 (6.1)
			2-1/2 (64)	2-1/2 (64)	70 (21.3)	70 (21.3)	70 (21.3)	70 (21.3)	70 (21.3)	70 (21.3)
	100,000	2 Pipe or 3-in. (76 mm) Concentric	2 (51)	2 (51)	5 (1.5)	NA	NA	NA	NA	NA
			2-1/2 (64)	2-1/2 (64)	40 (12.2)	30 (9.1)	20 (6.1)	20 (6.1)	10 (3.0)	NA
			3 (76)	3 (76)	70 (21.3)	70 (21.3)	70 (21.3)	70 (21.3)	70 (21.3)	70 (21.3)
	120,000	2 Pipe or 3-in. (76 mm) Concentric	2-1/2 (64) one disk	2-1/2 (64)	10 (3.0)	NA	NA	NA	NA	NA
			3 (76)†	NA	45 (13.7)	40 (12.2)	35 (10.7)	30 (9.1)	25 (7.6)	20 (6.1)
			3 (76) † no disk	3 (76)†	70 (21.3)	70 (21.3)	70 (21.3)	70 (21.3)	70 (21.3)	70 (21.3)
	140,000	2 Pipe or 3-in. (76 mm) Concentric	2-1/2 (64) one disk	NA	5 (1.5)	NA	NA	NA	NA	NA
			3 (76)†	NA	40 (12.1)	35 (10.6)	30 (9.1)	25 (7.6)	20 (6.1)	15 (4.6)
			3 (76) † no disk	NA	60 (18.3)	56 (17.0)	52 (15.8)	48 (14.6)	44 (13.4)	40 (12.2)
			4 (102) † no disk	NA	70 (21.3)	70 (21.3)	70 (21.3)	70 (21.3)	70 (21.3)	70 (21.3)

ALTITUDE FT (M)	UNIT SIZE (BTUH)	DIRECT VENT (2-PIPE) ONLY		NON-DIRECT VENT (1-PIPE) ONLY	NUMBER OF 90° ELBOWS					
		TERMINATION TYPE	PIPE DIA IN. (mm)*	PIPE DIA IN. (mm)*	1	2	3	4	5	6
2001 to 3000 (610 to 914) Canada	40,000	2 Pipe or 2-in. (51 mm) Concentric	1-1/2 (38)	1-1/2 (38)	67 (20.4)	62 (18.9)	57 (17.4)	52 (15.8)	52 (15.8)	47 (14.3)
			2 (51)	2 (51)	70 (21.3)	70 (21.3)	70 (21.3)	70 (21.3)	70 (21.3)	70 (21.3)
	60,000	2 Pipe or 2-in. (51 mm) Concentric	1-1/2 (38)	1-1/2 (38)	17 (5.2)	12 (3.7)	7 (2.1)	NA	NA	NA
			2 (51)	2 (51)	70 (21.3)	67 (20.4)	66 (20.1)	61 (18.6)	61 (18.6)	61 (18.6)
	80,000	2 Pipe or 2-in. (51 mm) Concentric	2 (51)	2 (51)	49 (14.9)	44 (13.4)	30 (9.1)	25 (7.6)	25 (7.6)	15 (4.6)
			2-1/2 (64)	2-1/2 (64)	70 (21.3)	70 (21.3)	70 (21.3)	70 (21.3)	70 (21.3)	70 (21.3)
	100,000	2 Pipe or 3-in. (76 mm) Concentric	2-1/2 (64)	2-1/2 (64)	35 (10.7)	26 (7.9)	16 (4.9)	16 (4.9)	6 (1.8)	NA
			3 (76)	3 (76)	70 (21.3)	70 (21.3)	70 (21.3)	70 (21.3)	66 (20.1)	61 (18.6)
	120,000	2 Pipe or 3-in. (76 mm) Concentric	3 (76)	NA	14 (4.3)	9 (2.7)	NA	NA	NA	NA
			NA	3 (76)†	63 (19.2)	62 (18.9)	62 (18.9)	61 (18.6)	61 (18.6)	61 (18.6)
			3 (76)† no disk	NA	70 (21.3)	70 (21.3)	63 (19.2)	56 (17.1)	50 (15.2)	43 (13.1)
			4 (102)† no disk	4 (102)† no disk	70 (21.3)	70 (21.3)	70 (21.3)	70 (21.3)	70 (21.3)	70 (21.3)
	140,000	2 Pipe or 3-in. (76 mm) Concentric	3 (76) one disk†	NA	20 (6.1)	15 (4.6)	10 (3.0)	5 (1.5)	NA	NA
			3 (76)† no disk	NA	39 (11.8)	35 (10.6)	31 (11.9)	27 (8.2)	23 (7.0)	19 (5.8)
			4 (102)† no disk	NA	70 (21.3)	70 (21.3)	70 (21.3)	70 (21.3)	70 (21.3)	70 (21.3)

See notes at end of table.

MAXIMUM ALLOWABLE PIPE LENGTH - FT (M) (CONTINUED)

ALTITUDE FT (M)	UNIT SIZE (BTUH)	DIRECT VENT (2-PIPE) ONLY		NON-DIRECT VENT (1-PIPE) ONLY	NUMBER OF 90° ELBOWS					
		TERMINATION TYPE	PIPE DIA – IN (mm)*	PIPE DIA – IN (mm)*	1	2	3	4	5	6
3001 to 4000 (914 to 1219)	40,000	2 Pipe or 2-in. (51 mm) Concentric	1-1/2 (38)	1-1/2 (38)	64 (19.5)	59 (18.0)	54 (16.5)	49 (14.9)	48 (14.6)	43 (13.1)
			2 (51)	2 (51)	70 (21.3)	70 (21.3)	70 (21.3)	70 (21.3)	70 (21.3)	70 (21.3)
	60,000	2 Pipe or 2-in. (51 mm) Concentric	1-1/2 (38)	1-1/2 (38)	16 (4.9)	11 (3.4)	6 (1.8)	NA	NA	NA
			2 (51)	2 (51)	68 (20.7)	63 (19.2)	62 (18.9)	57 (17.4)	57 (17.4)	56 (17.1)
	80,000	2 Pipe or 2-in. (51 mm) Concentric	2 (51)	2 (51)	46 (14.0)	41 (12.5)	28 (8.5)	23 (7.0)	22 (6.7)	13 (4.0)
			2-1/2 (64)	2-1/2 (64)	70 (21.3)	70 (21.3)	70 (21.3)	70 (21.3)	70 (21.3)	70 (21.3)
	100,000	2 Pipe or 3-in. (76 mm) Concentric	2-1/2 (64)	2-1/2 (64)	33 (10.1)	24 (7.3)	15 (4.6)	14 (4.3)	5 (1.5)	NA
			3 (76)	3 (76)	70 (21.3)	70 (21.3)	70 (21.3)	66 (20.1)	61 (18.6)	56 (17.1)
	120,000	2 Pipe or 3-in. (76 mm) Concentric	3 (76)† no disk	NA	65 (19.8)	58 (17.7)	51 (15.5)	44 (13.4)	38 (11.6)	31 (9.4)
			NA	3 (76)†	59 (18.0)	59 (18.0)	58 (17.7)	57 (17.4)	57 (17.4)	56 (17.1)
		4† no disk	4 (102)† no disk	4 (102) † no disk	70 (21.3)	70 (21.3)	70 (21.3)	70 (21.3)	70 (21.3)	70 (21.3)
	140,000	2 Pipe or 3-in. (76 mm) Concentric	3 (76) one disk†	NA	11 (3.4)	6 (1.8)	NA	NA	NA	NA
			3 (76)† no disk	NA	30 (9.1)	26 (7.9)	22 (6.7)	18 (5.5)	14 (4.3)	10 (3.0)
			4 (102)† no disk	NA	70 (21.3)	70 (21.3)	70 (21.3)	70 (21.3)	70 (21.3)	70 (21.3)

ALTITUDE FT (M)	UNIT SIZE (BTUH)	DIRECT VENT (2-PIPE) ONLY		NON-DIRECT VENT (1-PIPE) ONLY	NUMBER OF 90° ELBOWS					
		TERMINATION TYPE	PIPE DIA IN. (mm)*	PIPE DIA IN. (mm)*	1	2	3	4	5	6
4001 to 5000‡ (1219 to 1524)	40,000	2 Pipe or 2-in. (51 mm) Concentric	1-1/2 (38)	1-1/2 (38)	60 (18.3)	55 (16.8)	50 (15.2)	45 (13.7)	44 (13.4)	39 (11.9)
			2 (51)	2 (51)	70 (21.3)	70 (21.3)	70 (21.3)	70 (21.3)	70 (21.3)	70 (21.3)
	60,000	2 Pipe or 2-in. (51 mm) Concentric	1-1/2 (38)	1-1/2 (38)	15 (4.6)	10 (3.0)	5 (1.5)	NA	NA	NA
			2 (51)	2 (51)	64 (19.5)	59 (18.0)	58 (17.7)	53 (16.2)	52 (15.8)	52 (15.8)
	80,000	2 Pipe or 2-in. (51 mm) Concentric	2 (51)	2 (51)	44 (13.4)	39 (11.9)	26 (7.9)	21 (6.4)	20 (6.1)	11 (3.4)
			2-1/2 (64)	2-1/2 (64)	70 (21.3)	70 (21.3)	70 (21.3)	70 (21.3)	70 (21.3)	70 (21.3)
	100,000	2 Pipe or 3-in. (76 mm) Concentric	2-1/2 (64)	2-1/2 (64)	31 (9.4)	22 (6.7)	13 (4.0)	12 (3.7)	NA	NA
			3 (76)	3 (76)	70 (21.3)	70 (21.3)	67 (20.4)	62 (18.9)	57 (17.4)	52 (15.8)
	120,000	2 Pipe or 3-in. (76 mm) Concentric	3 (76)† no disk	NA	53 (16.2)	46 (14.0)	40 (12.2)	33 (10.1)	26 (7.9)	20 (6.1)
			NA	3 (76)†	56 (17.1)	55 (16.8)	54 (16.5)	53 (16.2)	52 (15.8)	52 (15.8)
			4 (102)† no disk	4 (102)† no disk	70 (21.3)	70 (21.3)	70 (21.3)	70 (21.3)	70 (21.3)	70 (21.3)
	140,000	2 Pipe or 3-in. (76 mm) Concentric	3 (76)† no disk	NA	21 (6.4)	17 (5.1)	13 (3.9)	9 (2.7)	5 (1.5)	NA
			4 (102)† no disk	NA	69 (21.0)	64 (19.5)	59 (17.9)	54 (16.4)	49 (15.0)	44 (13.4)

See notes at end of table.

MAXIMUM ALLOWABLE PIPE LENGTH - FT (M) (CONTINUED)

ALTITUDE FT (M)	UNIT SIZE (BTUH)	DIRECT VENT (2-PIPE) ONLY		NON-DIRECT VENT (1-PIPE) ONLY	NUMBER OF 90° ELBOWS					
		TERMINATION TYPE	PIPE DIA IN. (mm)*	PIPE DIA IN. (mm)*	1	2	3	4	5	6
5001 to 6000‡ (1524 to 1829)	40,000	2 Pipe or 2-in. (51 mm) Concentric	1-1/2 (38)	1-1/2 (38)	57 (17.4)	52 (15.8)	47 (14.3)	42 (12.8)	40 (12.2)	35 (10.7)
			2 (51)	2 (51)	70 (21.3)	70 (21.3)	70 (21.3)	70 (21.3)	70 (21.3)	70 (21.3)
	60,000	2 Pipe or 2-in. (51 mm) Concentric	1-1/2 (38)	1-1/2 (38)	14 (4.3)	9 (2.7)	NA	NA	NA	NA
			2 (51)	2 (51)	60 (18.3)	55 (16.8)	54 (16.5)	49 (14.9)	48 (14.6)	47 (14.3)
	80,000	2 Pipe or 2-in. (51 mm) Concentric	2 (51)	2 (51)	41 (12.5)	36 (11.0)	23 (7.0)	18 (5.5)	17 (5.2)	8 (2.4)
			2-1/2 (64)	2-1/2 (64)	70 (21.3)	70 (21.3)	70 (21.3)	70 (21.3)	70 (21.3)	70 (21.3)
	100,000	2 Pipe or 3-in. (76 mm) Concentric	2-1/2 (64)	2-1/2 (64)	29 (8.8)	21 (6.4)	12 (3.7)	11 (3.4)	NA	NA
			3 (76)	3 (76)	70 (21.3)	67 (20.4)	62 (18.9)	57 (17.4)	52 (15.8)	47 (14.3)
	120,000	2 Pipe or 3-in. (76 mm) Concentric	3 (76)† no disk	NA	42 (12.8)	35 (10.7)	29 (8.8)	22 (6.7)	15 (4.6)	9 (2.7)
			NA	3 (76)†	53 (16.2)	52 (15.8)	50 (15.2)	49 (14.9)	48 (14.6)	47 (14.3)
			4 (102)† no disk	4 (102)† no disk	70 (21.3)	70 (21.3)	70 (21.3)	70 (21.3)	70 (21.3)	70 (21.3)
	140,000	2 Pipe or 3-in. (76 mm) Concentric	3 (76)† no disk	NA	12 (3.6)	8 (2.4)	NA	NA	NA	NA
			4 (102)† no disk	NA	42 (12.8)	37 (11.2)	32 (9.7)	27 (8.2)	22 (6.7)	17 (5.1)

ALTITUDE FT (M)	UNIT SIZE (BTUH)	DIRECT VENT (2-PIPE) ONLY		NON-DIRECT VENT (1-PIPE) ONLY	NUMBER OF 90° ELBOWS					
		TERMINATION TYPE	PIPE DIA IN. (mm)*	PIPE DIA IN. (mm)*	1	2	3	4	5	6
6001 to 7000‡ (1829 to 2134)	40,000	2 Pipe or 2-in. (51 mm) Concentric	1-1/2 (38)	1-1/2 (38)	53 (16.2)	48 (14.6)	43 (13.1	38 (11.6)	37 (11.3)	32 (9.8)
			2 (51)	2 (51)	70 (21.3)	70 (21.3)	68 (20.7)	67 (20.4)	66 (20.1)	64 (19.5)
	60,000	2 Pipe or 2-in. (51 mm) Concentric	1-1/2 (38)	1-1/2 (38)	13 (4.0)	8 (2.4)	NA	NA	NA	NA
			2 (51)	2 (51)	57 (17.4)	52 (15.8)	50 (15.2)	45 (13.7)	44 (13.4)	43 (13.1)
	80,000	2 Pipe or 2-in. (51 mm) Concentric	2 (51)	2 (51)	38 (11.6)	33 (10.1)	21 (6.4)	16 (4.9)	15 (4.6)	6 (1.8)
			2-1/2 (64)	2-1/2 (64)	70 (21.3)	70 (21.3)	68 (20.7)	67 (20.4)	66 (20.1)	64 (19.5)
	100,000	2 Pipe or 3-in. (76 mm) Concentric	2-1/2 (64)	2-1/2 (64)	27 (8.2)	19 (5.8)	10 (3.0)	9 (2.7)	NA	NA
			3 (76)	3 (76)	68 (20.7)	63 (19.2)	58 (17.7)	53 (16.2)	48 (14.6)	43 (13.1)
	120,000	2 Pipe or 3-in. (76 mm) Concentric	3 (76)† no disk	NA	31 (9.4)	24 (7.3)	18 (5.5)	11 (3.4)	NA	NA
			NA	3 (76)†	49 (14.9)	48 (14.6)	47 (14.3)	45 (13.7)	44 (13.4)	43 (13.1)
	140,000	2 Pipe or 3-in. (76 mm) Concentric	4 (102)† no disk	NA	17 (5.1)	12 (3.6)	7 (2.1)	NA	NA	NA

See notes at end of table.

MAXIMUM ALLOWABLE PIPE LENGTH - FT (M) (CONTINUED)

ALTITUDE FT (M)	UNIT SIZE (BTUH)	DIRECT VENT (2-PIPE) ONLY		NON-DIRECT VENT (1-PIPE) ONLY	NUMBER OF 90° ELBOWS					
		TERMINATION TYPE	PIPE DIA IN. (mm)*	PIPE DIA IN. (mm)*	1	2	3	4	5	6
7001 to 8000‡ (2134 to 2438)	40,000	2 Pipe or 2-in. (51 mm) Concentric	1-1/2 (38)	1-1/2 (38)	49 (14.9)	44 (13.4)	39 (11.9)	34 (10.4)	33 (10.1)	28 (6.5)
			2 (51)	2 (51)	66 (20.1)	65 (19.8)	63 (19.2)	62 (18.9)	60 (18.3)	59 (18.0)
	60,000	2 Pipe or 2-in. (51 mm) Concentric	1-1/2 (38)	1-1/2 (38)	12 (3.7)	7 (2.1)	NA	NA	NA	NA
			2 (51)	2 (51)	53 (16.2)	48 (14.6)	46 (14.0)	41 (12.5)	40 (12.2)	38 (11.6)
	80,000	2 Pipe or 2-in. (51 mm) Concentric	2 (51)	2 (51)	36 (11.0)	31 (9.4)	19 (5.8)	14 (4.3)	12 (3.7)	NA
			2-1/2 (64)	2-1/2 (64)	66 (20.1)	65 (19.8)	63 (19.2)	62 (18.9)	60 (18.3)	59 (18.0)
	100,000	2 Pipe or 3-in. (76 mm) Concentric	2-1/2 (64)	2-1/2 (64)	25 (7.6)	17 (5.2)	8 (2.4)	7 (2.1)	NA	NA
			3 (76)	3 (76)	63 (19.2)	58 (17.7)	53 (16.2)	48 (14.6)	43 (13.1)	38 (11.6)
	120,000	2 Pipe or 3-in. (76 mm) Concentric	3 (76)† no disk	NA	20 (6.1)	13 (4.0)	7 (2.1)	NA	NA	NA
			NA	3 (76)†	46 (14.0)	44 (13.4)	43 (13.1)	41 (12.5)	40 (12.2)	38 (11.6)
			4 (102)† no disk	4 (102)† no disk	61 (18.6)	56 (17.1)	51 (15.5)	46 (14.0)	41 (12.5)	36 (11.0)
	140,000	NA								

ALTITUDE FT (M)	UNIT SIZE (BTUH)	DIRECT VENT (2-PIPE) ONLY		NON-DIRECT VENT (1-PIPE) ONLY	NUMBER OF 90° ELBOWS					
		TERMINATION TYPE	PIPE DIA IN. (mm)*	PIPE DIA IN. (mm)*	1	2	3	4	5	6
8001 to 9000‡ (2438 to 2743)	40,000	2 Pipe or 2-in. (51 mm) Concentric	1-1/2 (38)	1-1/2 (38)	46 (14.0)	41 (12.5)	36 (11.0)	31 (9.4)	29 (8.8)	24 (7.3)
			2 (51)	2 (51)	62 (18.9)	60 (18.3)	58 (17.7)	56 (17.1)	55 (16.8)	53 (16.2)
	60,000	2 Pipe or 2-in. (51 mm) Concentric	1-1/2 (38)	1-1/2 (38)	11 (3.4)	6 (1.8)	NA	NA	NA	NA
			2 (51)	2 (51)	49 (14.9)	44 (13.4)	42 (12.8)	37 (11.3)	35 (10.7)	34 (10.4)
	80,000	2 Pipe or 2-in. (51 mm) Concentric	2 (51)	2 (51)	33 (10.1)	28 (8.5)	17 (5.2)	12 (3.7)	10 (3.0)	NA
			2-1/2 (64)	2-1/2 (64)	62 (18.9)	60 (18.3)	58 (17.7)	56 (17.1)	55 (16.8)	53 (16.2)
	100,000	2 Pipe or 3-in. (76 mm) Concentric	2-1/2 (64)	2-1/2 (64)	23 (7.0)	15 (4.6)	7 (2.1)	5 (1.5)	NA	NA
			3 (76)	3 (76)	59 (18.0)	54 (16.5)	49 (14.9)	44 (13.4)	39 (11.9)	34 (10.4)
	120,000	2 Pipe or 3-in. (76 mm) Concentric	3 (76)† no disk	NA	10 (3.0)	NA	NA	NA	NA	NA
			NA	3 (76)†	43 (13.1)	41 (12.5)	39 (11.9)	37 (11.3)	35 (10.7)	34 (10.4)
			4 (102)† no disk	4† no disk	35 (10.7)	30 (9.1)	25 (7.6)	20 (6.1)	15 (4.6)	10 (3.0)
	140,000	NA								

See notes at end of table.

58MCB

MAXIMUM ALLOWABLE PIPE LENGTH - FT (M) (CONTINUED)

ALTITUDE FT (M)	UNIT SIZE (BTUH)	DIRECT VENT (2-PIPE) ONLY		NON-DIRECT VENT (1-PIPE) ONLY	NUMBER OF 90° ELBOWS					
		TERMINATION TYPE	PIPE DIA IN. (mm)*	PIPE DIA IN. (mm)*	1	2	3	4	5	6
9001 to 10,000‡ (2743 to 3048)	40,000	2 Pipe or 2-in. (51 mm) Concentric	1-1/2 (38)	1-1/2 (38)	42 (12.8)	37 (11.3)	32 (9.8)	27 (8.2)	25 (7.6)	20 (6.1)
			2 (51)	2 (51)	57 (17.4)	55 (16.8)	53 (16.2)	51 (15.5)	49 (14.9)	47 (14.3)
	60,000	2 Pipe or 2-in. (51 mm) Concentric	2 (51)	2 (51)	45 (13.7)	40 (12.2)	38 (11.6)	33 (10.1)	31 (9.4)	29 (8.8)
	80,000	2 Pipe or 2-in. (51 mm) Concentric	2 (51)	2 (51)	30 (9.1)	25 (7.6)	14 (4.3)	9 (2.7)	7 (2.1)	NA
			2-1/2 (64)	2-1/2 (64)	57 (17.4)	55 (16.8)	53 (16.2)	51 (15.5)	49 (14.9)	47 (14.3)
	100,000	2 Pipe or 3-in. (76 mm) Concentric	2-1/2 (64)	2-1/2 (64)	21 (6.4)	13 (4.0)	5 (1.5)	NA	NA	NA
			3 (76)	3 (76)	54 (16.5)	49 (14.9)	44 (13.4)	39 (11.9)	34 (10.4)	29 (8.8)
	120,000	2 Pipe or 3-in. (76 mm) Concentric	NA	3 (76)†	39 (11.9)	37 (11.3)	35 (10.7)	33 (10.1)	31 (9.4)	29 (8.8)
			4 (102)† no disk	4 (102)† no disk	10 (3.0)	5 (1.5)	NA	NA	NA	NA
	140,000	NA								

* Disk usage-Unless otherwise specified, use perforated disk assembly (factory-supplied in loose parts bag).

If one disk is stated, separate 2 halves of perforated disk assembly and use shouldered disk half. When using shouldered disk half, install screen side toward inlet box.

† Wide radius elbow.

‡ Vent sizing for Canadian installations over 4500 ft. (1372 M) above sea level are subject to acceptance by the local authorities having jurisdiction. NA-Not Allowed; pressure switch will not make.

1. Do not use pipe size greater than those specified in table or incomplete combustion, flame disturbance, or flame sense lockout may occur.
2. Size both the combustion-air and vent pipe independently, then use the larger diameter for both pipes.
3. Assume two 45° elbows equal one 90° elbow. Wide radius elbows are desirable and may be required in some cases.
4. Elbows and pipe sections within the furnace casing and at the vent termination should not be included in vent length or elbow count.
5. The minimum pipe length is 5 ft (1.5 M) for all applications.
6. Use 3-in. (76 mm) diameter vent termination kit for installations requiring 4-in (102 mm) diameter pipe.

VENT LENGTH FOR OUTLET RESTRICTOR USAGE (60,000 BTU MODEL ONLY) - FT (M)‡

ALTITUDE – FT (M)	UNIT SIZE	DIRECT VENT (2–PIPE)	NON–DIRECT VENT (1–PIPE ONLY)	NO. OF 90° ELBOWS				
		PIPE DIA. (IN / mm)	PIPE DIA. (IN / mm)	1	2	3	4	5
0 – 2000 (0 – 610)	60,000	2–in. (51)	2–in. (51)	28 (8.5)	20 (6)	15 (4.2)	10 (3)	
2001 – 3000 (610 – 914)*		2–in. (51)	2–in. (51)	24 (7.3)	17 (5.1)	12 (3.6)	7 (2.1)	
3001 – 4000 (914 – 1219)		2–in. (51)	2–in. (51)	21 (6.4)	13 (3.9)	8 (2.4)		
4001 – 5000 (1219 – 1524)		2–in. (51)	2–in. (51)	17 (5.1)	10 (3)	5 (1.5)		
5001 – 6000 (1524 – 1829)		2–in. (51)	2–in. (51)	14 (4.2)	6 (1.8)			
6001 – 7000 (1829 – 2134)		2–in. (51)	2–in. (51)	10 (3)				
7001 – 8000 (2134 – 2438)		2–in. (51)	2–in. (51)	6 (1.8)				
8001 – 9000 (2438 – 2743)		2–in. (51)	2–in. (51)					
9001 – 10000 (2743 – 3048)		2–in. (51)	2–in. (51)					

*Canada

‡Discard outlet restrictor if vent lengths or elbows exceed the above table Discard restrictor if using 11/2–in. (38mm) diameter pipe. Refer to installation instructions for outlet restrictor installation guidelines.

MAXIMUM ALLOWABLE EXPOSED VENT PIPE LENGTH (FT/M) WITH AND WITHOUT INSULATION IN WINTER DESIGN TEMPERATURE AMBIENT*

FURNACE SIZE	WINTER DESIGN TEMPERATURE °F (°C)	MAX PIPE DIAMETER IN (mm)	WITHOUT INSULATION FT (M)	WITH 3/8–IN. (10 mm) OR THICKER INSULATION† FT (M)
040	20 (−7)	1.5 (38)	51 (16)	70 (21)
	0 (−18)	1.5 (38)	28 (9)	70 (21)
	−20 (−29)	1.5 (38)	16 (5)	70 (21)
	20 (−7)	2 (51)	45 (14)	70 (21)
	0 (−18)	2 (51)	22 (7)	70 (21)
	−20 (−29)	2 (51)	10 (3)	58 (18)
060	20 (−7)	2 (51)	65 (20)	70 (21)
	0 (−18)	2 (51)	35 (11)	70 (21)
	−20 (−29)	2 (51)	20 (6)	70 (21)
080	20 (−7)	2 (51)	55 (17)	55 (17)
	0 (−18)	2 (51)	48 (15)	55 (17)
	−20 (−29)	2 (51)	30 (9)	55 (17)
	20 (−7)	2.5 (64)	70 (21)	70 (21)
	0 (−18)	2.5 (64)	47 (14)	70 (21)
	−20 (−29)	2.5 (64)	28 (9)	70 (21)
100	20 (−7)	2.5 (64)	40 (12)	40 (12)
	0 (−18)	2.5 (64)	40 (12)	40 (12)
	−20 (−29)	2.5 (64)	38 (12)	40 (12)
	20 (−7)	3 (76)	70 (21)	70 (21)
	0 (−18)	3 (76)	50 (15)	70 (21)
	−20 (−29)	3 (76)	28 (9)	70 (21)
120	20 (−7)	3 (76)	70 (21)	70 (21)
	0 (−18)	3 (76)	61 (19)	70 (21)
	−20 (−29)	3 (76)	37 (11)	70 (21)
	20 (−7)	4 (102)	70 (21)	70 (21)
	0 (−18)	4 (102)	48 (15)	70 (21)
	−20 (−29)	4 (102)	23 (7)	70 (21)
140	20 (−7)	3 (76)	60 (18)	60 (18)
	0 (−18)	3 (76)	60 (18)	60 (18)
	−20 (−29)	3 (76)	44 (13)	60 (18)
	20 (−7)	4 (102)	70 (21)	70 (21)
	0 (−18)	4 (102)	57 (17)	70 (21)
	−20 (−29)	4 (102)	30 (9)	70 (21)

* Pipe length (Ft. / M) specified for maximum pipe lengths located in unconditioned spaces. Pipes located in unconditioned space cannot exceed total allowable pipe length as specified in the “Maximum Allowable Pipe Length” chart.

† Insulation thickness based on R value of 3.5 per in.

TYPICAL INSTALLATIONS

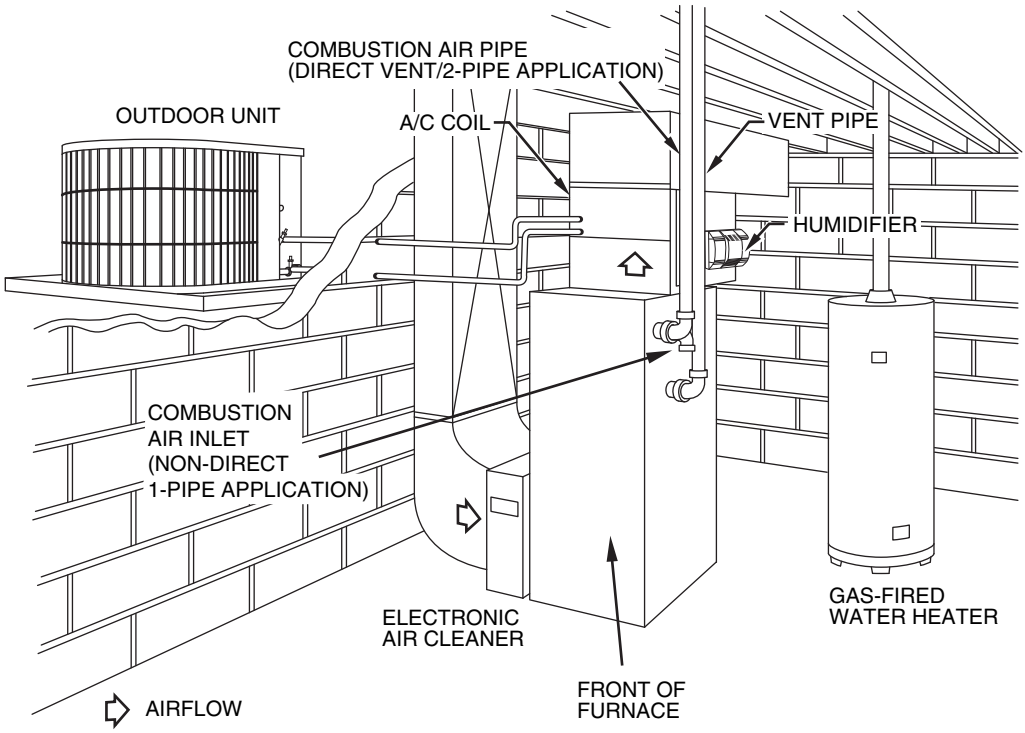

A05064

Basement - Upflow Application

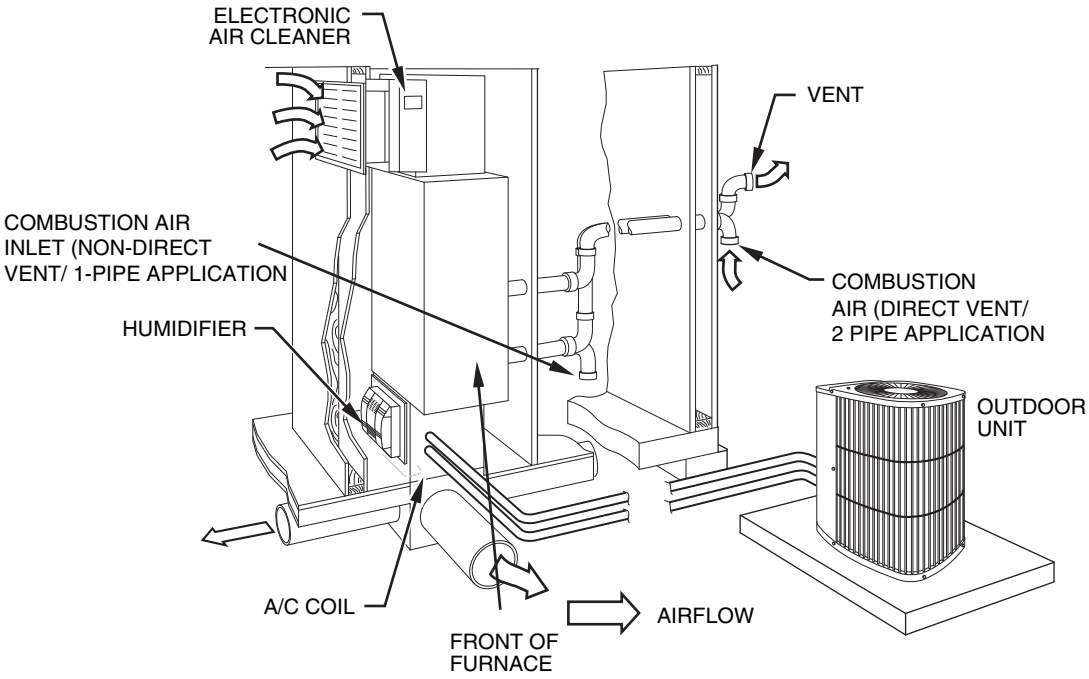

A05065

Closet - Downflow Application

TYPICAL INSTALLATIONS (CONTINUED)

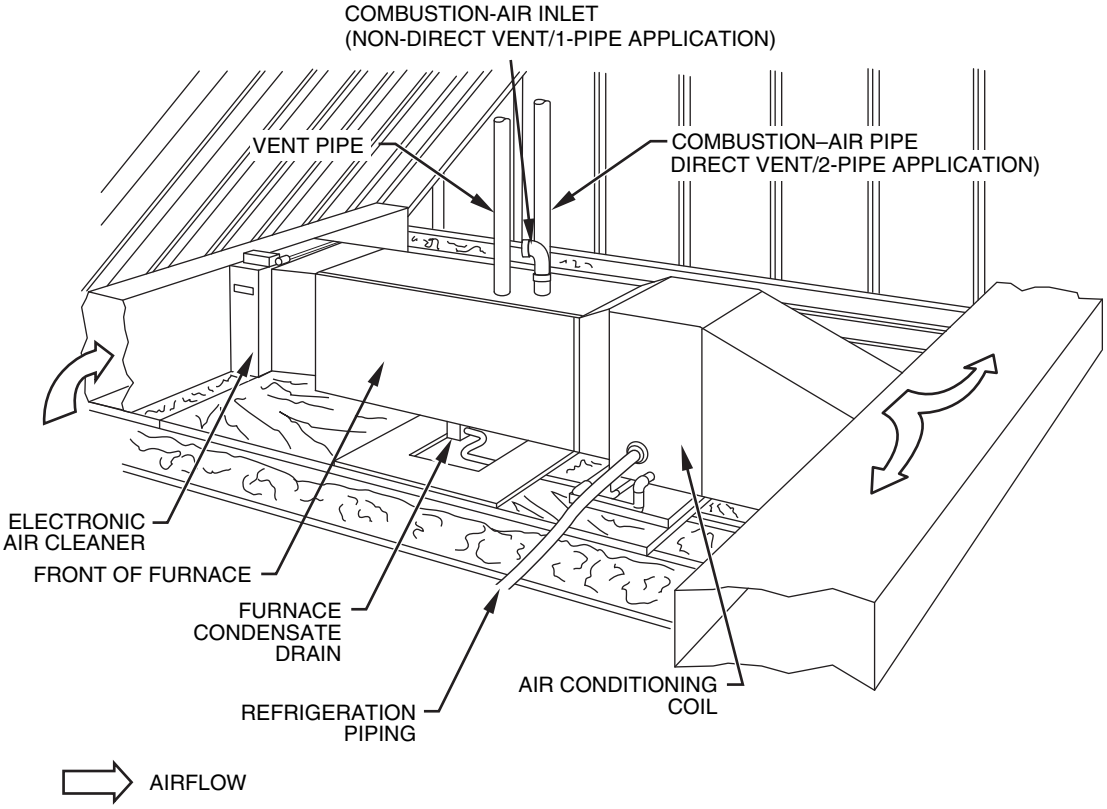

A05066

Attic - Horizontal Application

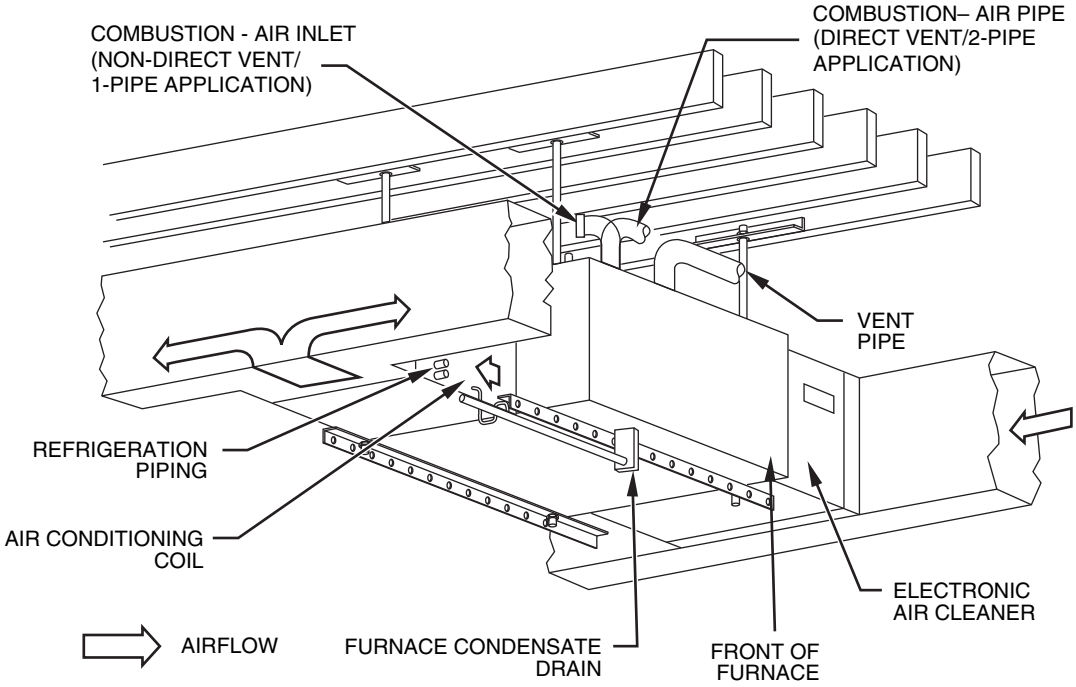

A05067

Crawlspace - Horizontal Application

58MCB

GUIDE SPECIFICATIONS

58MCB

GENERAL

System Description

Furnish a _____ (4-way multipoise) fixed capacity gas-fired condensing furnace for use with natural gas or propane (factory authorized conversion kit required for propane); furnish cold air return plenum; furnish side (external) filter rack.

Quality Assurance

Unit will be designed, tested and constructed to the current ANSI Z21.47/CSA 2.3 design standard for gas-fired central furnaces. Unit will be 3rd party certified by CSA to the current ANSI Z21.47/CSA 2.3 design standard for gas-fired central furnaces. Unit will carry the CSA Blue Star® and Blue Flame® labels.

Unit efficiency testing will be performed per the current DOE test procedure as listed in the Federal Register.

Unit will be certified for capacity and efficiency and listed in the latest AHRI Consumer's Directory of Certified Efficiency Ratings.

Unit will carry the current Federal Trade Commission Energy Guide efficiency label.

Delivery, Storage, and Handling

Unit will be shipped as single package only and is stored and handled per unit manufacturer's recommendations.

Warranty (for inclusion by specifying engineer) U.S. and Canada only. Warranty certificate available upon request.

PRODUCTS

Equipment

Components shall include: slow-opening gas valve to reduce ignition noise, regulate gas flow, with electric switch gas shut-off; flame proving sensor, hot surface igniter, pressure switch assembly verifies inducer operation; flame rollout switch, drain tubing and installed condensate drain trap, blower and inducer assembly, 40va transformer; low-voltage (heating) (heating/ cooling) thermostat.

Blower Wheel and Blower Motor

Galvanized blower wheel shall be centrifugal type, statically and dynamically balanced. Blower motor of PSC type shall be permanently lubricated with sealed bearings, of _____ hp, and shall be multiple-speed direct drive. Blower motor shall be soft mounted to the blower scroll to reduce vibration transmission.

Filters

Furnace shall have reusable-type filters. Filter shall be _____ in. (mm) x _____in. (mm).

Casing

Casing shall be of .030 in. (.76 mm) thickness minimum, pre-painted galvanized steel.

Inducer Motor

Inducer motor shall be soft mounted to reduce vibration transmission.

Primary Heat Exchangers

Primary Heat exchangers shall be 3-Pass 20 gauge corrosion resistant aluminized steel of fold-and-crimp sectional design, which operates under negative pressure. Secondary Heat Exchangers Secondary Heat exchangers shall be of a flow-through design having a patented interior laminate coating of polypropylene for greater corrosion resistance with fold-and-crimp design, which operates under negative pressure.

Controls

Controls shall include a microprocessor based integrated electronic control board with at least 11 service troubleshooting codes displayed via diagnostic flashing LED light on the control, has ability to store fault codes, when activated a self-test feature checks all major functions of the furnace within one minute, and a replaceable automotive-type circuit protection fuse. Multiple operational settings available including separate blower speeds. Cooling airflow will be selectable between 350 or 400 CFM per ton of air conditioning.

Operating Characteristics

Heating Capacity shall be _____ Btuh input; _____ Btuh output capacity. Fuel Gas Efficiency shall be 92% AFUE. Air delivery shall be _____ cfm minimum at 0.50 in. wg. external static pressure. Dimensions shall be: depth _____ in. (mm); width _____ in. (mm); height _____ in. (mm) (casing only). Height shall be _____ in. (mm) with A/C coil and _____ in. (mm) overall with plenum.

Electrical Requirements

Electrical supply shall be 115 volts, 60 Hz, single-phase (nominal). Minimum wire size shall be _____ AWG; maximum fuse size or HACR-type, designated circuit breaker shall be _____ Amps.

Special Features

Refer to section of the product data sheet identifying accessories and descriptions for specific features and available enhancements.

Copyright 2010 Carrier Corp. ● 7310 W. Morris St. ● Indianapolis, IN 46231
Printed in U.S.A. Edition Date: 11/10

Catalog No: 58MCB–6PD

Manufacturer reserves the right to change, at any time, specifications and designs without notice and without obligations.

Replaces: 58MCB–5PD